PERPETUAL

TROUBLE SHOOTER'S MANUAL

Reg. U. S. Pat. Off.

VOLUME XXI

JOHN F. RIDER PUBLISHER, INC.

480 Canal Street New York 13, N. Y.

Compliments of www.nucow.com

BOOKS BY RIDER

The Radio Amateur's Beam Pointer Guide
Installation and Servicing of Low Power Public Address Systems
Inside the Vacuum Tube
Servicing Superheterodynes
Servicing Receivers by Means of Resistance Measurement

*

Perpetual Trouble Shooter's Manuals
Volumes I to V Abridged (one volume)

Volume VI	Volume X	Volume XIV	Volume XVIII
Volume VII	Volume XI	Volume XV	Volume XIX
Volume VIII	Volume XII	Volume XVI	Volume XX
Volume IX	Volume XIII	Volume XVII	Volume XXI

Master Index — Vols. I–XV

Television—How It Works

*

Rider Television Manuals

Volume 1	Volume 3
Volume 2	Volume 4

Volume 5

*

Rider PA Manuals
Volume I

*

Aligning Philco Receivers, Volumes I and II
Automatic Frequency Control Systems
Servicing by Signal Tracing
The Oscillator at Work
The Meter at Work
Vacuum Tube Voltmeters

*

An Hour a Day with Rider
on:
Resonance and Alignment
Automatic Volume Control
Alternating Currents in Radio Receivers
D-C Voltage Distribution in Radio Receivers

*

Encyclopedia on Cathode-Ray Oscilloscopes and Their Uses—by Rider-Uslan
FM Transmission and Reception — by Rider-Uslan
Understanding Vectors and Phase — by Rider-Uslan
A-C Calculation Charts — by R. Lorenzen
Radar — What It Is — by Rider-Rowe
Understanding Microwaves — by Victor J. Young
Broadcast Operator's Handbook — by H. E. Ennes
High Frequency Measuring Techniques Using Transmission Lines
By E. N. Phillips, W. G. Sterns, N. J. Gamara
TV Picture Projection and Enlargement — by Allan Lytel
The Business Helper—by L. C. Rucker
Radio Operator's License Q & A Manual—by M. Kaufman
TV Installation Techniques—by S. L. Marshall
TV and Other Receiving Antennas (Theory and Practice)—by A. B. Bailey

The servicing data appearing on Philco, RCA and other pages carrying individual copyright notices, are copyrighted by the respective companies and are reproduced herein with their permission.

Entire Contents Copyrighted, 1950, by John F. Rider

Printed in U. S. A.

Compliments of www.nucow.com

HERE'S NEWS!

PUBLICATION OF SUCCESSFUL SERVICING

Rider's *FREE* House-organ Resumed!

A publication dedicated to the technical and financial advancement of the radio servicemen.

It will keep you abreast of new developments in the electronic field, timely articles on electronic maintenance, changes in manufacturers' schematics, etc. . . . these are vital to you . . . this FREE service is yours for the asking. . . . It was good before — it will be better in the future!

Mail This Coupon TODAY!

JOHN F. RIDER PUBLISHER, INC.
Att.: Successful Servicing
404 Fourth Avenue
New York 16, N. Y.

(Please PRINT your NAME and ADDRESS)

Kindly mail your FREE house-organ SUCCESSFUL SERVICING to:

_____
Name

_____
Street

_____
City Zone State XVII

Check the following . . .

Are you a — SERVICEMAN ☐
DEALER ☐
ENGINEER ☐
HAM ☐
STUDENT ☐

Compliments of www.nucow.com

Compliments of www.nucow.com

MODELS 4R11, 4R12,
Ch. 4R1

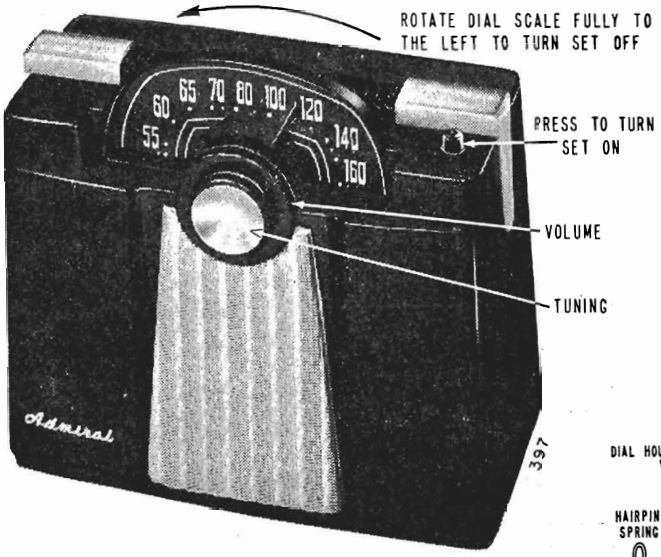

WEAK RECEPTION DUE TO SLIPPING VOLUME DRIVE CORD.

Weak reception can be caused by the slipping of the volume drive cord. If the set is still weak after the batteries and tubes have been checked, it is a good idea to check the volume drive for slipping. To make this check, first remove the "A" battery from the cabinet and connect outside of the set. Turn the set on and fully rotate the volume knob to the right (clockwise). Then reach into the cabinet and rotate the volume pulley on the volume control as far to the right (clockwise) as it will go. If the volume increases, it will be necessary to remove the chassis from the cabinet and check the stringing of the volume drive cord. See paragraph "Stringing Volume Control Drive".

"HIDE-A-WAY" DIAL

Illustrations below show front, rear and exploded views of dial mechanism. Follow the sequence shown in exploded view for disassembly or reassembly of the knobs, pointer or dial.

The "Hide-A-Way" dial mechanism is operated by the push button which works the trigger release bracket. The trigger bracket releases the dial assembly.

Thrust of the lever arm roller against the cam on back of the dial causes the dial to pop-up while a protruding edge on the lever arm simultaneously trips (turns on) the on-off switch.

Lever arm thrust is adjustable by attaching the far end of the lever arm spring to any of the holes spaced at different distances from the lever arm.

Rotating the dial fully to the left locks the dial into the cabinet and also trips (shuts-off) the on-off switch.

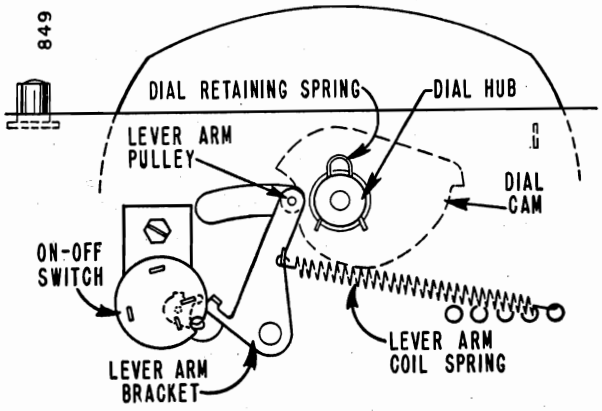

"Hide-A-Way" Dial, Rear View

REMOVING AND INSTALLING CHASSIS

To remove the chassis from the cabinet, remove the tuning knobs, cabinet bottom (base) and metal speaker grille. The speaker grille is removed by pulling it down away from the cabinet.

Release the chassis by removing the two mounting screws located in the top inside of the cabinet just below the handle brackets.

Install the chassis in cabinet in the same manner, being sure that the 1 5/16" diameter fibre washer (sleeve retainer) is placed over the volume tuning sleeve just before sliding the chassis into the cabinet.

Also, before tightening the two chassis mounting screws adjust the chassis for even spacing between all sides of the dial and the cut-out in the cabinet, otherwise binding may result. In some early sets, the bottom of the dial can be leveled with the top surface of the cabinet (when dial is fully concealed) by adjusting the bracket adjustment screw called out in the front view illustration of the "Hide-A-Way" dial.

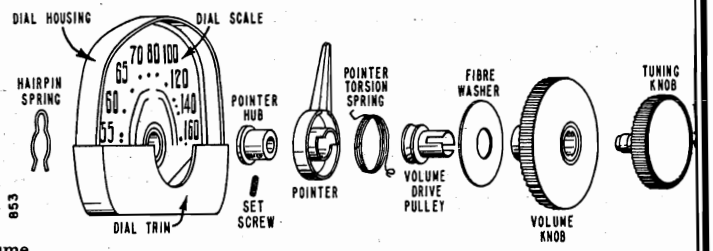

Dial and Tuning Knob Assembly, Exploded View

STRINGING VOLUME CONTROL DRIVE

Illustrations below show volume cord stringing used in early and in late production sets.

Before restringing the volume cord, rotate volume control fully clockwise and, using a #6 Allen wrench, tighten the set screw on the volume control pulley, first being sure the cut-out slots on the pulley are in the position shown in the illustration. Loop the cord in the cut-out slots, winding 1½ turns around the volume control pulley, and then winding 2 turns around the volume tuning sleeve. In late sets loop the cord around the fibre pulley to the left of the set. To prevent slipping, be sure that the volume control turns freely and that the dial cord tension spring has sufficient tension.

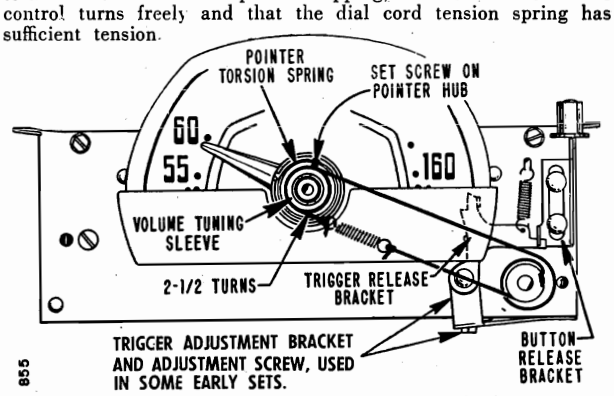

"Hide-A-Way" Dial, Front View (early set)

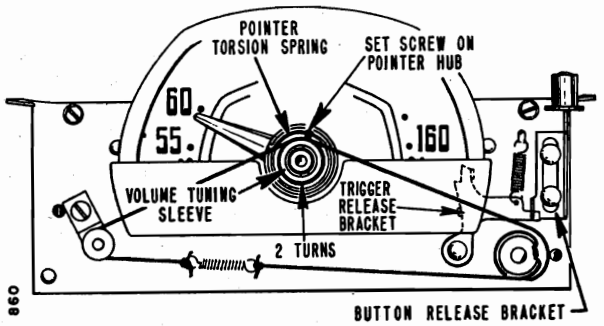

"Hide-A-Way" Dial, Front View (late set)

©John F. Rider

Compliments of www.nucow.com

MODELS 4R11, 4R12, Ch. 4R1

DIAL POINTER

The illustration shows an exploded view of the dial assembly and the sequence in which the pointer hub and torsion spring are to be assembled. When assembling the pointer torsion spring to the pointer, insert the rectangular end into the base of the pointer; compress the spring from about one-half to one turn in a clock-wise direction. Insert the rounded or looped end of the spring over the top end of the pointer set screw. Allow about 1/64" clearance between the inner turn of the pointer spring and pointer hub, or the pointer may bind or stick.

To adjust pointer, fully close the gang condenser. Set the end of the pointer over the two dots below 55 on the dial and tighten the pointer screw with a #4 Allen wrench. Important: Allow approximately 1/32" clearance between the hub on the pointer and the dial scale.

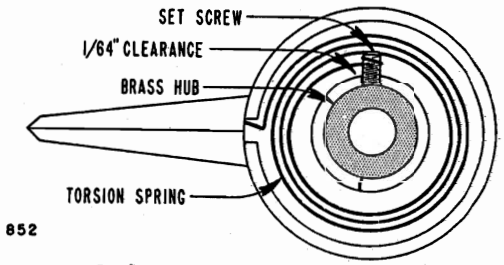

Dial Pointer and Hub Assembly

ALIGNMENT PROCEDURE

- Use battery power for alignment if fresh batteries are available.
- When using AC power, an isolation transformer should be used if available. If not using an isolating transformer, connect a .1 mfd. condenser in series with the signal generator low side to B minus (Pin 7 of 1U5 tube).
- Batteries should be held in chassis during alignment.
- Set volume control full on.
- Connect output meter across speaker voice coil.
- Use lowest setting of signal generator capable of producing adequate output meter indication and then proceed as outlined below.
- Use a non-metallic alignment tool for IF transformers.
- Repeat adjustments to insure good results.

Step	Dummy Antenna in Series with Signal Generator	Connection of Signal Generator (High Side)	Signal Generator Frequency	Receiver Gang Setting	Trimmer Description	Trimmer Designation	Type of Adjustment
1	.001 mfd. when using A. C. .1 mfd. when using Battery	Tuning condenser, antenna stator	455 KC	Gang fully open	2nd IF 1st IF	*A, B *C, D	Maximum output
2	"	"	1620 KC	"	Oscillator (on gang)	E	"
Install metal chassis cover.							
3	Loop of several turns of wire, or place generator lead close to receiver loop for adequate signal.	No physical connection (signal by radiation)	1400 KC	Tune in generator signal	Antenna (on gang)	F	"

*Adjustments A and C are made from other side of chassis.

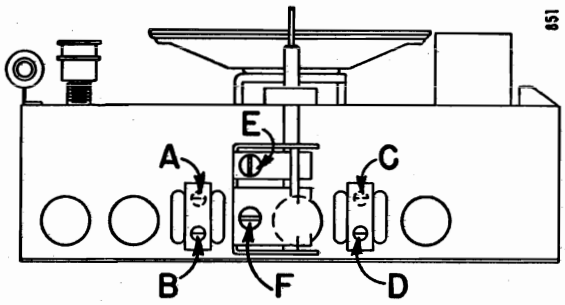

Trimmer Location, Underside of Chassis

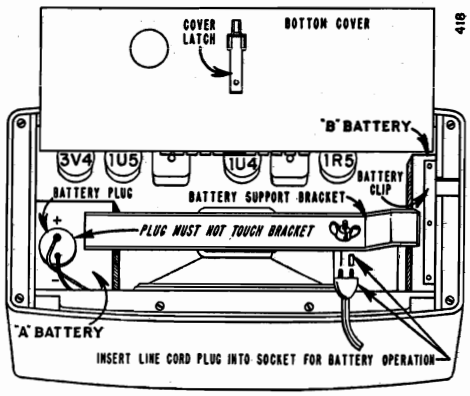

Tube and Battery Location

REPLACEMENT OF BATTERIES

Use replacement "A" and "B" batteries of the following types:

A Battery (7½ Volts): General 31, Eveready 717, Burgess C5, Ray-o-Vac 751C or equivalent.

B Battery (67½ Volts): General 108, Eveready 467, Burgess XX45, Ray-o-Vac 4367 or equivalent.

Electrical characteristics of recommended batteries for these models provide for equal life for both the "A" and "B" batteries. "A" batteries may give satisfactory performance as low as 5.5 volts; "B" batteries as low as 49.5 volts. Replace batteries when reception is weak and voltage has dropped below values given above.

To install replacement batteries, slide the cover latch and open the hinged bottom cover. Then remove the wing nut which holds the battery support bracket in place.

Disconnect battery connectors from old batteries. Batteries can easily be removed from the set by grasping them with long nose pliers or if necessary removing the cabinet bottom. Install new batteries so battery connectors are farthest away from the ends of the battery bracket. Batteries may become shorted if bracket touches connectors.

REPLACING TUBES

Tubes can most conveniently be removed or replaced by first removing the batteries and cabinet bottom. A miniature tube puller or extractor will be of help in facilitating tube replacement.

©John F. Rider

Compliments of www.nucow.com

MODELS 4R11, 4R12, Ch. 4R1

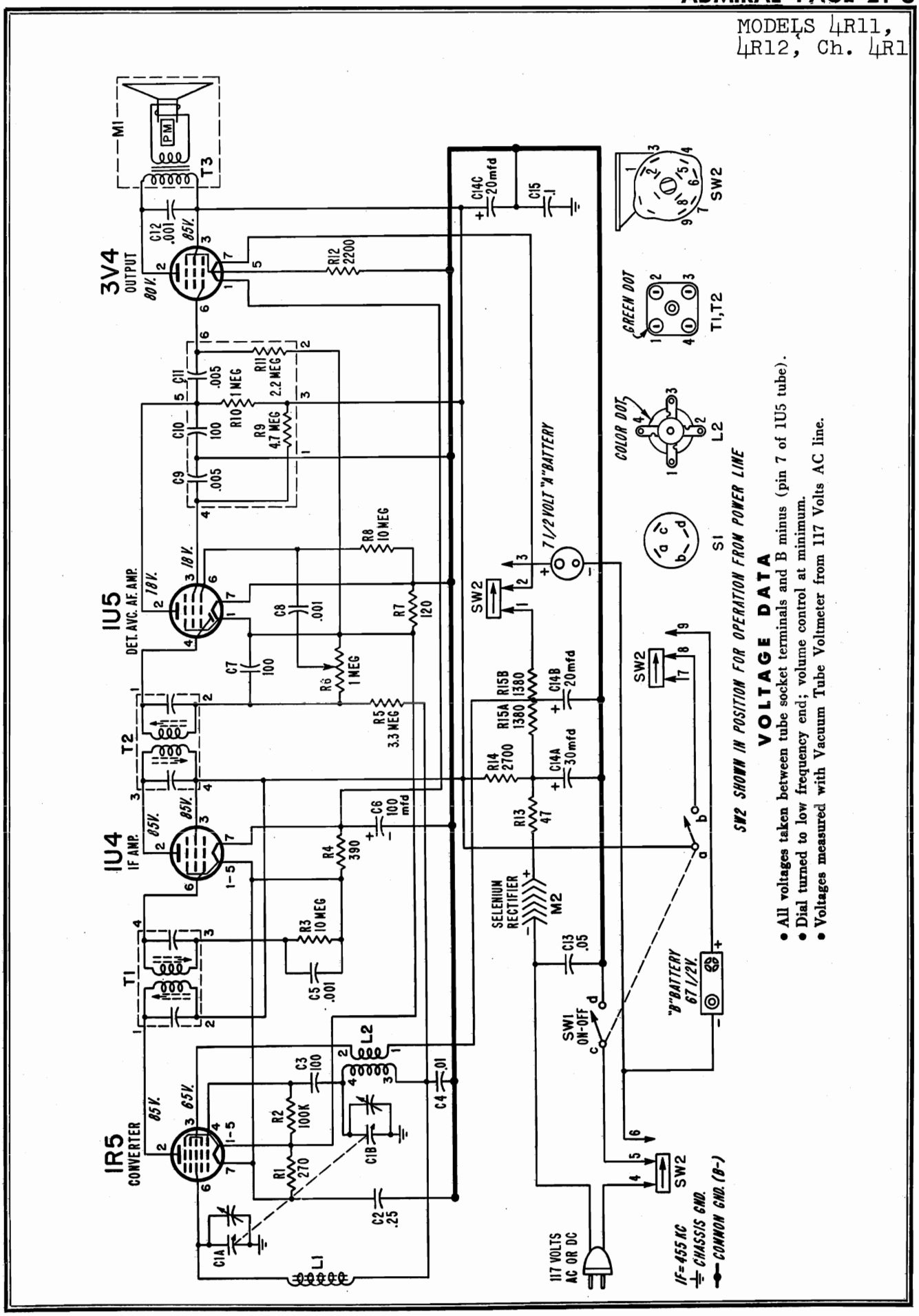

©John F. Rider

Compliments of www.nucow.com

MODELS 4R11, 4R12, Ch. 4R1

RESISTORS

Symbol	Description	Part No.
R1	270 ohms, ½ watt (was 180 ohms in early sets)	60B 8-271
R2	100,000 ohms, ½ watt	60B 8-104
R3	10 Megohms, ½ watt	60B 8-106
R4	390 ohms, ½ watt	60B 8-391
R5	3.3 megohms, ½ watt	60B 8-335
R6	1 megohm, Vol. Control	75B 1-37
R7	120 ohms, ½ watt	60B 8-121
R8	10 megohms, ½ watt	60B 8-106
*R9	4.7 megohms, ½ watt	
*R10	1 megohm, ½ watt	
*R11	2.2 megohms, ½ watt	
R12	2,200 ohms, ½ watt	60B 8-222
R13	47 ohms, 1 watt	60B 14-470
R14	2,700 ohm, 1 watt	60B 14-272
R15A	1380 ohms } Tapped Candohm	61A 5-7
R15B	1380 ohms } Tapped Candohm	61A 5-7

CONDENSERS

C1A	272.3 mmfd. max., Ant. } Gang	68B 34
C1B	107.2 mmfd. max., Osc. } Gang	68B 34
C2	.25 mfd, 200 volts, paper	64B 1-28
C3	100 mmfd. ceramic	65B 6-3
C4	.01 mfd, 400 volts, paper	64B 1-25
C5	.001 mfd, min. ceramic	65B 6-41
C6	100 mfd, 25 volts, Electrolytic	67A 4-6
C7	100 mmfd, ceramic	65B 6-3
C8	.001 mfd, min. ceramic	65B 6-41
*C9	.005 mfd, min. ceramic	
*C10	100 mmfd, ceramic	
*C11	.005 mfd, ceramic	

*Part of couplate (part #63A4-3). Replace with exact duplicate or individual components. Note that numbers 1, 2, 3, 4, 5, 6, on schematic correspond to lead numbers printed on face of couplate.

C12	.001 mfd, min. ceramic	65B 6-41
C13	.05 mfd, 400 volts, paper	64B 8-28
C14A	30 mfd, 150 volts } Electrolytic	67C 7-41
C14B	20 mfd, 150 volts } Electrolytic	67C 7-41
C14C	20 mfd, 150 volts } Electrolytic	67C 7-41
C15	.1 mfd, 200 volts, paper	64B 1-30

COILS, TRANSFORMERS, ETC.

L1	Antenna, Rod (Ferro-Scope)	69C 120
L2	Coil, Oscillator	69A 39-4
T1	Transformer, 1st IF	72B 28- 1
T2	Transformer, 2nd IF	72B 28-61
T3	Transformer, Output	98A 21
M1	Speaker (3½" PM) and Output Trans.	78B 58-1
M2	Rectifier, Selenium	93A 1-6
SW1	Switch, On-Off, DPST, (less bracket)	77A 23
SW2	Switch, Power Change	77A 19-1
	*Couplate (includes R9, R10, R11, C9, C10, C11)	63A 4-3

PARTS FOR "HIDE-A-WAY" DIAL

Description	Part No.
Dial Cord (for volume control)	50A 1-3
Dial Scale	
Ebony for 4R11	22C 25-4
Maroon for 4R12	22C 25-1
Housing Assembly, Metal (for dial scale, includes hub and cam)	
Ebony for 4R11	A3264
Maroon for 4R12	A3256
Hub, Brass (for dial pointer)	27A 151
Pointer, Dial	25A 40
Pulley, Brass (volume tuning sleeve)	27A 149
Screw (#6x5/6 S.T.B.H.—for mtg. dial trim)	1A 71-9-71
Screw, Set (#4-40x5/16—for dial pointer hub)	1A 43-4
Spring, Hairpin (for mtg. dial ass'bly)	19A 2-6
Spring, Pointer Torsion	19A 63
Trim, Plastic (front bottom of dial housing)	
Ebony for 4R11	33B 60-1
Maroon for 4R12	33B 60-2

CABINET PARTS

Description	Part No.
Bottom, Cabinet (Base)	
Ebony for 4R11	
complete with metal door	A3270
plastic frame only	34D 35-2
Maroon for 4R12	
complete with metal door	A3260
plastic frame only	34D 35-1
Bracket, Handle Support (metal ends)	20B 14
Button, Push	
Ebony for 4R11	33A 61-1
Maroon for 4R12	33A 61-2
Cabinet (less bottom)	
Ebony for 4R11	A3271
Maroon for 4R12	A3273
Catch, Slide (for bottom door)	15A 291
Grille, Speaker (metal)	
Ebony for 4R11	36B 14-1
Gold for 4R12	36B 14
Handle, Carrying (plastic covering only)	
Ebony for 4R11	33A 58-1
Maroon for 4R12	33A 58-2
Hinge, Bottom Cover	37A 33
Knob	
Volume, Ebony	33C 56-2
Volume, Maroon	33C 56-4
Tuning, Ebony (includes compression ring)	A3272
Tuning, Maroon (includes compression ring)	A3274
Monogram ("Admiral")	26A 36
Ring, Compression (for tuning knob)	18A 5-5
Rivet, Shoulder	
with 5/64 shoulder	6A 4-2-2
with 7/64 shoulder	6A 4-12-71
with 15/64 shoulder	6A 4-11-2
with 3/32 shoulder	6A 4-7-71
Washer, Felt (for volume knob)	5A 4-17
Washer, Fibre (1 5/16" ODx 7/16" ID; for retaining volume pulley)	5A 1-17
Rubber Strap (for carrying handle)	12A 38
Screw	
#4x5/8 self tapping; for mtg. plastic base to cabinet	1A 69-6-71
#8-32x7/16; for mtg. handle and chassis	280-437-C2-71
Slide Arm (for bottom door)	15A 291
Spacer, Brass (for mtg. carrying handle)	29A 1-54
Spring, Support (for carrying handle)	18A 42

MISCELLANEOUS PARTS

Description	Part No.
Baffle, Speaker	43A 111
Bracket	
on-off switch mounting	15A 602
battery support	15A 603
button release	15A 599
trigger release and adjustment bracket assembly (used in early sets only)	A3253
trigger release bracket only	15A 600
volume pulley and bracket assy. (used in late sets only)	A3316
shield for gang	15A 618
cover for AC switch	15A 595
lever arm assembly	A3254
Carton and Fillers	44B 165
Clip, IF Transformer mounting	72B 28-10
Clip "B" Battery Connector	90A 5-3
Cover, Metal	
for chassis	14C 70
for AC switch	15A 595
Dial Cord (24" length needed)	50A 1-3
Insulator, Fibre (for mtg. rectifier)	32A 137
Manual	
Customers Instruction	41A 18-16
Service Manual	S322
Nut, Wing (#6/32 for battery support bracket)	2A 5-4-71
Plate, Electrolytic Mounting	67A 2-1
Plug, "A" Battery Connector	88A 4-6
Pulley, Brass	
mounts on volume control shaft	27A 150
drive for volume control cord	27A 149
riveted to lever arm	27A 146
Screw, Set	
for volume control pulley (#6-32x3/16)	1A 43-8
for pointer hub (#4-40x5/16)	1A 43-4
Snap Button (for mtg. AC switch cover)	13A 1-1-71
Socket, Tube	87A 3-4
Speed Nut, #5/32 (for trigger adjustment bracket)	2B 10-12
Spring, Coil	
for dial release bracket (1½"x3/16" dia.)	19B 1-18
for lever arm (1¾" long)	19A 64
for dial cord (volume control) (7/16"x1/8" dia.)	19B 1-16
Spring, Hairpin (for retaining dial housing)	19A 2-6
Washer, Spring (5/16"ODx3/16"ID)	4A 6-13

©John F. Rider

Compliments of www.nucow.com

MODELS 6A21, 6A22, 6A23, Ch. 6A2

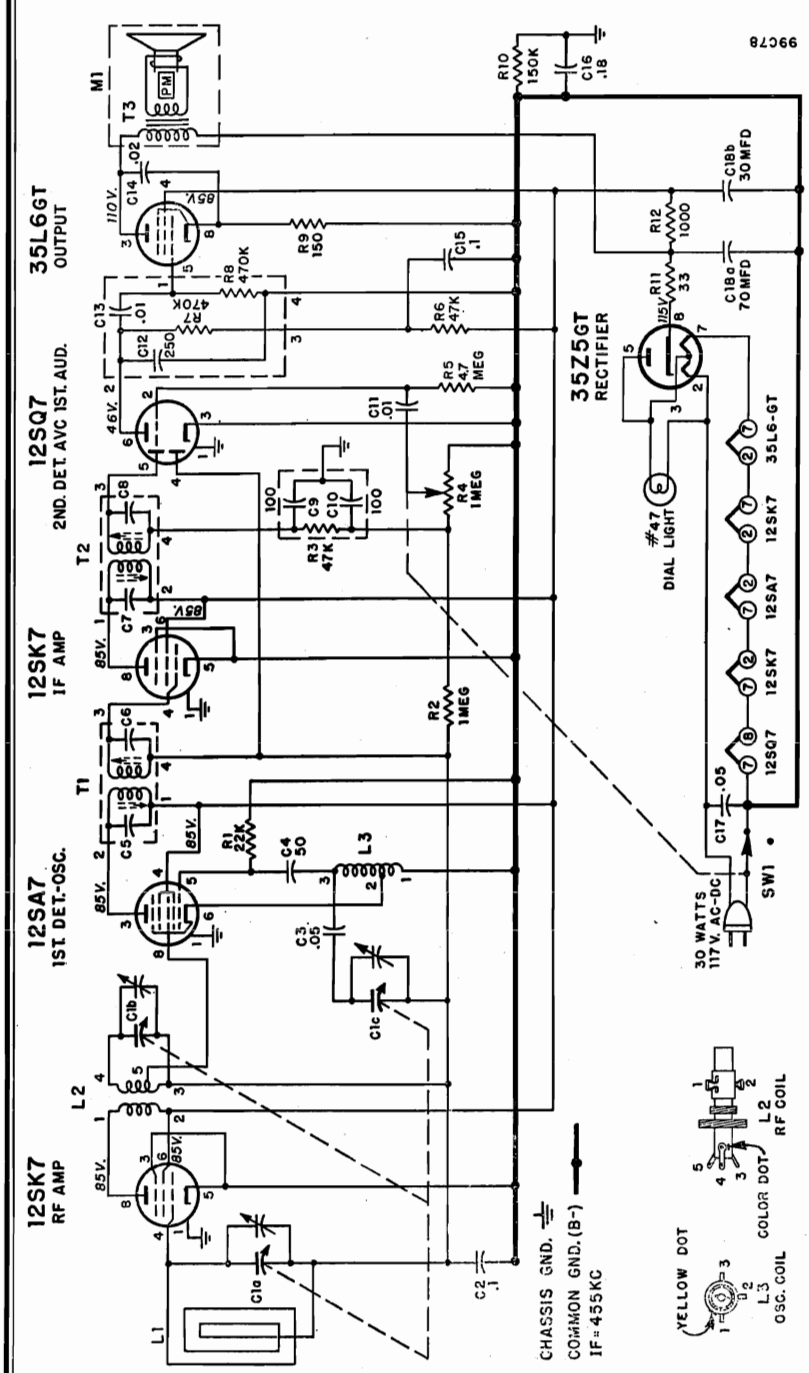

POINTER SETTING AND DIAL CORD STRINGING

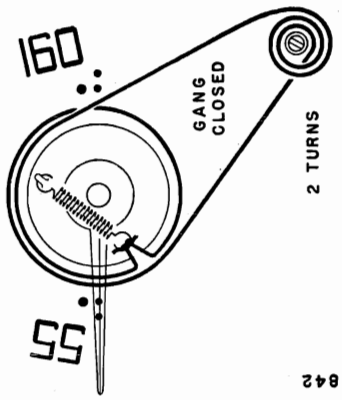

With gang fully closed, set pointer in horizontal position.

842

TUBE AND TRIMMER LOCATION

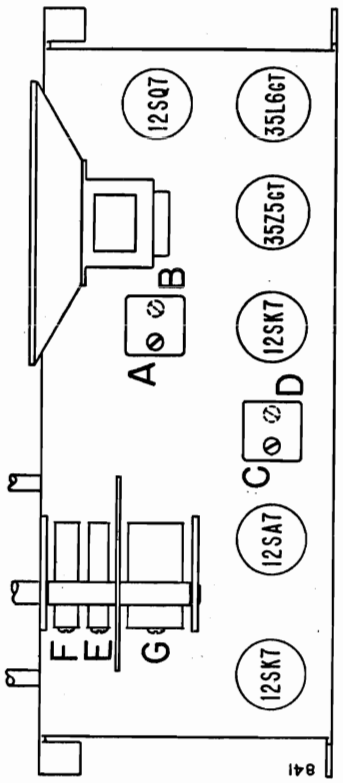

Adjustments B and D are made from underside of chassis.

841

©John F. Rider

Compliments of www.nucow.com

MODELS 6A21, 6A22, 6A23, Ch. 6A2

ALIGNMENT PROCEDURE

- Turn receiver volume control full on.
- Use an isolation transformer if available, otherwise connect a .1 mfd. condenser in series with low side of signal generator, and connect to B minus (terminal of On-Off switch).

  Caution: Do not connect a ground wire directly to chassis.
- Connect output meter across speaker voice coil.
- Use lowest output setting of signal generator capable of producing adequate output meter indication and then proceed as outlined in chart below.
- Repeat adjustments to insure good results.
- Use a non-metallic alignment tool for IF transformers.

Step	Dummy Anntenna in Series with Signal Generator	Connection of Signal Generator (High Side)	Signal Generator Frequency	Receiver Gang Setting	Trimmer Description	Trimmer Designation	Type of Adjustment
1	250 mmfd. condenser	Pin 8 of 12SA7 tube	455 KC	Gang fully open	2nd IF 1st IF	A, *B C, *D	Maximum Output
2	250 mmfd. condenser	Tuning condenser Antenna stator	1620 KC	"	Oscillator (on gang)	E	"
3	Loop of several turns of wire (or place generator lead close to receiver loop for adequate signal)	No physical connection (signal by radiation)	1400 KC	Tune in Generator signal	RF (on gang)	F	"
4	"	"	"	"	Antenna (on gang)	G	"

*Adjustments B and D are made from underside of chassis.

VOLTAGE DATA

- All voltages taken between tube socket terminals and B minus (terminal of On-Off switch).
- Dial turned to low frequency end; volume control at minimum.
- Voltages measured with Vacuum Tube Voltmeter from 117 Volts AC line.

RESISTORS

Symbol	Description	Part No.
R1	22,000 Ohms, ½ Watt	60B 8-223
R2	1 Megohm, ½ Watt	60B 8-105
††R3	47,000 Ohms, ½ Watt	
R4	1 Megohm Volume Control and On-Off switch SW1	75B 1-36
R5	4.7 Megohms, ½ Watt	60B 8-475
R6	47,000 Ohms, ½ Watt	60B 8-473
†R7	470,000 Ohms, ½ Watt	
†R8	470,000 Ohms, ½ Watt	
R9	150 Ohms, ½ Watt	60B 8-151
R10	150,000 Ohms, ½ Watt	60B 8-154
R11	33 Ohms, 1 Watt	60B 28-3
R12	1,000 Ohms, 1 Watt	60B 28-2

CONDENSERS

Symbol	Description	Part No.
C1a	420 mmfd, (max) Ant.	
C1b	193.8 mmfd, (max) RF } Gang	68B 33-2
C1c	90 mmfd, (max) Osc.	
	(Dial drum spot welded to gang)	
C2	.1 mfd., 200 Volts, Paper	64B 1-30
C3	.05 mfd., 400 Volts, Paper	64B 1-22
C4	50 mmfd., Mica	65B 6-4
C5	86 mmfd., part of T1	
C6	107 mmfd., part of T1	
C7	86 mmfd., part of T2	
C8	107 mmfd., part of T2	
††C9	100 mmfd., Ceramic	
††C10	100 mmfd., Ceramic	
C11	.01 mfd., 400 Volts, Paper	64B 1-25
†C12	250 mmfd., Ceramic	
†C13	.01 mfd., Ceramic	
C14	.02 mfd., 400 Volts, Paper	64B 1-24
C15	.1 mfd., 200 Volts, Paper	64B 1-30
C16	.18 mfd., 200 Volts, Paper	64A 2-2
C17	.05 mfd., 400 Volts, Paper	64B 1-22
C18a	70 mfd., 150 Volts } Elect	67A 17
C18b	30 mfd., 150 Volts } Elect	67A 17

COILS, TRANSFORMERS, Etc.

Symbol	Description	Part No.
L1	Antenna, Loop (mounted on cardboard back)	69C 19-1
L2	Coil, RF	69A 115-1
L3	Coil, Oscillator	69A 52-2
T1	Transformer, 1st I.F.	72B 28-7
T2	Transformer, 2nd I.F.	72B 28-7
T3	Transformer, Output	98A 4
M1	Speaker (5" PM) and Output Transformer	78B 57-2
SW1	Switch, On-Off	Part of R4
	†Couplate (Includes R7, R8, C12, C13,	63A 5-1
	††Diode Filter (Includes R3, C9, C10)	63A 3-1

CABINET PARTS

Description	Part No.
Back Assembly (includes L1 loop antenna)	69C 19-1
Cabinet, Plastic	
Ebony (6A21)	34D 25-1
Mahogany (6A22)	34D 25-2
Ivory (6A23)	34D 25-3
Clip, Tinnerman (for mtg. escutcheon)	2B 10-6-69
Escutcheon, Dial, (Plastic)	23D 46-3
Knob, Tuning	
Ebony (6A21)	33A 21-11
Mahogany (6A22)	33A 21-12
Ivory (6A23)	33A 21-13
Shield, Fibre (for pilot light)	32A 138
Washer, Felt (for tuning knobs)	5A 4-4

MISCELLANEOUS

Description	Part No.
Baffle, Speaker	43B 74
Carton and Fillers	44B 150
Clip, IF Transformer Mounting	72B 28-10
Dial Background	22B 24
Dial Cord	50A 1-3
Fastener (for mtg. speaker baffle)	8A 8-4
Grommet, Rubber (for mtg. gang)	12A 1-2
Pilot Light #47	81A 1-8
Pointer, Dial	25A 39
Ring, Pointer Compression	19A 31-1
Service Manual	S320
Shaft, Tuning	28A 11-3
Snap Button, Dial Background Mtg.	13A 1-3-47
Socket, Pilot Light	82A 3-4
Socket, Tube	87A 10-2
Spacer, Metal "T" (for mtg. gang)	29A 2-1-71
Spacer, Speaker Mounting	29A 1-17
Sponge Rubber, (for dial background)	12A 5-17
Spring, Dial Cord Tension	19B 1-2
Washer, "C" (tuning shaft)	4A 4-5
Washer, Spring (tuning shaft)	4A 6-3-0

†Part of couplate (part 63A 5-1). Replace with exact duplicate or individual components. Note that numbers 1, 2, 3, 4, on schematic correspond to couplate lead numbers printed on face of couplate 63A 5-1.

††Part of diode filter (part 63A 3-1). Replace with exact duplicate or individual components.

©John F. Rider

Compliments of www.nucow.com

MODELS 6S11, 6S12; Ch. 6S1

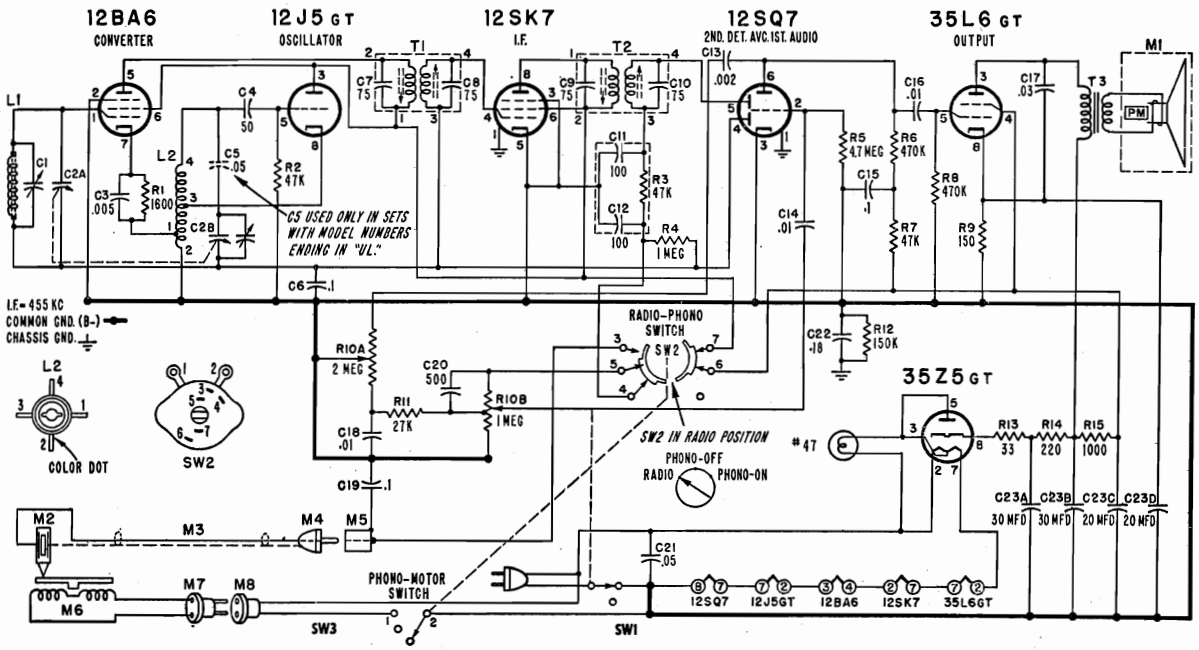

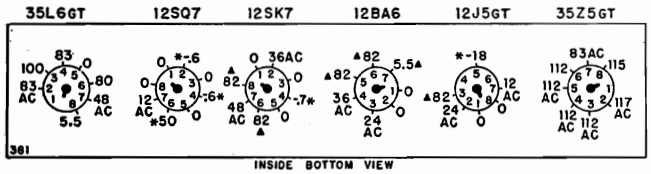

VOLTAGE DATA

- All readings made between tube socket terminals and B minus (terminal of On-Off switch).
- Range Switch in "Radio" position.
- Measured on 117 Volt AC line.
- Volume control minimum; dial turned to low end.
- Voltages measured with Vacuum Tube Voltmeter.

*** If taken with a 1000 ohm-per-volt meter, readings will be either lower or practically zero.**
▲ On "Phono" these voltages will be zero. All other DC readings may be slightly higher.

RESISTORS

Symbol	Description	Part No.
R1	1,600 Ohms, ½ Watt, 5%	60B 7-162
R2	47,000 Ohms, ½ Watt	60B 8-473
†R3	47,000 Ohms, ¼ Watt	
R4	1 Megohm, ½ Watt	60B 8-105
R5	4.7 Megohms, ½ Watt	60B 8-475
R6	470,000 Ohms, ½ Watt	60B 8-474
R7	47,000 Ohms, ½ Watt	60B 8-473
R8	470,000 Ohms, ½ Watt	60B 8-474
R9	150 Ohms, 1 Watt	60B 14-151
R10A	2 Megohms, Tone	75B 11-8
R10B	1 Megohm, Volume	
R11	27,000 Ohms, ½ Watt	60B 8-273
R12	150,000 Ohms, ½ Watt	60B 8-154
R13	33 Ohms, 1 Watt	60B 28-3
R14	220 Ohms, 1 Watt	60B 28-7
R15	1,000 Ohms, 1 Watt	60B 28-2

CONDENSERS

Symbol	Description	Part No.
C1	Trimmer, 3 to 30 mmfd.	Part of L1
C2a	Gang-0 to 420 mmfd.	68B 30
C2b	Gang-0 to 108 mmfd.	
	Note—Dial drum spot welded to Gang.	
C3	.005 mfd., min., Ceramic	65A 10-1
C4	50 mmfd., Ceramic	65B 6-4
C5	.05 mfd., 400 Volts, Paper	64B 1-22
C6	.1 mfd., 200 volts, Paper	64B 1-30
C7	75 mmfd., 3%, Ceramic	Part of T1
C8	75 mmfd., 3%, Ceramic	Part of T1
C9	75 mmfd., 3%, Ceramic	Part of T2
C10	75 mmfd., 3%, Ceramic	Part of T2
†C11	100 mmfd., Ceramic	
†C12	100 mmfd., Ceramic	
C13	.002 mfd., 600 Volts, Paper	64B 1-14
C14	.01 mfd., 400 Volts, Paper	64B 1-25
C15	.1 mfd., 200 Volts, Paper	64B 1-30
C16	.01 mfd., 400 Volts, Paper	64B 1-25
C17	.03 mfd., 400 Volts, Paper	64B 1-23
C18	.01 mfd., 400 Volts, Paper	64B 1-25
C19	.1 mfd., 200 Volts, Paper	64B 1-30
C20	500 mmfd., Ceramic	65B 6-6
C21	.05 mfd., 400 Volts, Paper	64B 1-22
C22	.18 mfd., 200 Volts, Paper	64A 2-2
C23a	30 mfd., 150 Volts	Elect. 67A 14-1
C23b	30 mfd., 150 Volts	
C23c	20 mfd., 150 Volts	
C23d	20 mfd., 25 Volts	

COILS, TRANSFORMERS, ETC.

Symbol	Description	Part No.
L1	Antenna and Trimmer	69C 118
L2	Coil, Oscillator	69A 113-1
T1	Transformer, 1st IF	72B 50
T2	Transformer, 2nd IF	72B 51
T3	Transformer, Output	79A 11-4
M1	Speaker (5" pm)	78B 39-1
M5	Socket, Phono input	88A 1
M8	Socket & Leads, Motor	89A 6-3
SW1	Switch, On-Off	Part of R10
SW2	Switch, Radio-Phono	77A 28-1
SW3	Switch, Phono Motor	Part of SW2
	†Diode Filter	63A 3-1

MISCELLANEOUS

Carton and Fillers	44B 145
Clip, Electrolytic Mounting	18A 10-6
Cover, Plastic Shaft	45C 11-3
Dial Cord	50A 1-3
Drum, Pointer	17A 27
Gasket, Sponge Rubber (mounts on Speaker)	12A 5-16
Grommet, Rubber (Gang mtg.)	12A 1-2
Insulator, Phono Receptacle	32A 46
Manual	
Customer Instruction	41A 17-45
Service, for 6S1 Chassis	S299
Service, for RC500 Changer	S298
Pilot Light, #47	81A1-8
Pilot Light Socket and Leads	82A2-2
Plate, Pointer Support	15A 498
Pointer, Dial	25A 35-1
Shaft, Pointer	28A 42
Shield, Pilot Light	82A 15-1
Sleeve, Pointer Shaft	27A 124
Sleeve, Tuning (Brass)	27A 123
Spacer, "T" (Gang condenser mtg.)	29A 2-1-71
Spring, Dial Cord Tension	19B 1-5
Socket, Tube (12BA6)	87A 32
Washer, "C" (for pointer drum)	4A 4-6
Washer, Spring	4A 6-10-0

CABINET PARTS

Cabinet, Plastic	
Bottom, less lid (Ebony 6S11)	34D 28-3
Bottom, less lid (Mahogany 6S12)	34D 28-5
Lid only (Ebony 6S11)	34D 28-4
Lid only (Mahogany 6S12)	34D 28-6
Clamp, Cable	11A2-2
Escutcheon, Dial	23C 51-1
Escutcheon Ring (Gold trim)	23A 53
Hinge	37A 8-1

Description	Part No.
Hinge Screw (6/32x¼ BH MS)	365-250-C2-58
Hinge Stud	27A 17-1
Jewel, Pilot Light	82A 14-1
Knobs, Radio, for Ebony 6S11	
"Tuning" (outer knob)	33C 55-11
"Radio-Phono" (inner knob)	33C 55-12
"Off-On Volume" (inner knob)	33C 55-14
"Tone" (outer knob)	33C 55-13
Knobs, Radio, for Mahogany 6S12	
Two types of knobs were used. Early 6S12 sets used dual knobs having an inner knob with a recessed bar. Later 6S12 sets used dual knobs having an inner knob with a raised bar.	
"Tuning"	33C 48-26 (Early sets)
"Radio-Phono"	33C 48-23 (Early sets)
"Off-On Volume"	33C 48-24 (Early sets)
"Tone"	33C 48-25 (Early sets)
"Tuning"	33C 55-7 (Late sets)
"Radio-Phono"	33C 55-8 (Late sets)
"Off-On Volume"	33C 55-10 (Late sets)
"Tone"	33C 55-9 (Late sets)
Rubber Bumper	
for cabinet bottom	12A 3-4
for cabinet top	12A 9-8
Speed Nut (for mtg. pilot light jewel)	2B 10-28-59
Spring, Escutcheon Mtg. (2 reg.)	19A 60
Stay Arm and Plate	37A 9-1
Washer, Felt (for tuning knobs)	5A 4-9

PHONOGRAPH PARTS

M2 Cartridge, Pickup (includes needle)	409A 13
M3 Cable, Shielded Pickup (includes plug)	412A 11-2
M4 Plug, Pickup Cable	88A 2-3
M6 Motor, Phono (3 speed)	407B 19
M7 Plug, Motor (Male)	88A 8-1
Adapter, 45 RPM (envelope of 12)	48A 8-1
Button, Snap-in Plug	13A 2-8-57
Centerpost, Record	G400B 505
Idler Wheel (includes tire)	G400A 279
Needle, Pickup	
for 409A13 cartridge	98A 15-19
for 409A13-1 cartridge	98A 15-18
Needle Retaining Nut (for 409A13 cartridge).	98A 54-2
Service Manual, RC500	S298
Screw and Washer Changer Mounting (10-32x1¼ RHMS)	AA210
Spring, Changer Float	19A 10-3

† Part of Diode Filter 63A3-1. This unit, consisting of C11, C12 and R3 may be replaced with individual components.

©John F. Rider

Compliments of www.nucow.com

MODELS 6S11,
6S12, Ch. 6S1

ALIGNMENT PROCEDURE

- Turn receiver volume and tone controls full on.
- Antenna must be connected and placed in the same relative position to the chassis as when in cabinet.
- Use an isolation transformer if available, otherwise connect a .1 mfd. condenser in series with low side of signal generator and attach to B minus of chassis (terminal of On-Off Switch). Caution: Do not connect a ground wire directly to chassis.
- Connect output meter across speaker voice coil.
- Use lowest output setting of signal generator capable of producing adequate output meter indication and proceed in the following sequence.
- Repeat adjustments to insure good results.
- Use a non-metallic alignment tool for IF transformers.

Step	Dummy Antenna in Series with Signal Generator	Connection of Signal Generator (High Side)	Signal Generator Frequency	Receiver Gang Setting	Trimmer Description	Trimmer Designation	Type of Adjustment
1	250 mmfd. condenser	Tuning condenser, antenna stator	455 KC	Gang fully open	2nd IF 1st IF	*A, B *C, D	Maximum output
2	250 mmfd. condenser	Tuning condenser, antenna stator	1620 KC	Gang fully open	Oscillator	E	Maximum output

Mount dial pointer. Set pointer to horizontal position with tuning condenser tuned to 1400 KC generator signal (see illustration below). Rotate the tuning condenser until the pointer is in a vertical position (900 KC), then slip chassis in cabinet, carefully guiding the pointer so that it locates between the dial escutcheon and the cabinet. Install antenna and chassis mounting bolts. The pointer and escutcheon may be mounted after installing the chassis in cabinet as follows: Set pointer to horizontal position with gang tuned to 1400 KC signal. Place escutcheon on cabinet. With long nose pliers slip the hairpin ends of the escutcheon mounting springs in holes of escutcheon tabs.

3	Loop of several turns of wire, or place generator lead close to receiver antenna for adequate signal.	No actual connection (signal by radiation)	1400 KC	Tune in generator signal	Antenna	†F	Maximum output

*Adjustments A and C made from the underside of the chassis. If IF transformers have hollow core slugs, these adjustments may all be made from the top of chassis, if you use alignment tool #98A30-7 obtainable from your Admiral distributor. The bottom IF slug adjustment may be reached through the hollow core in the upper slug.
† Antenna Trimmer "F" should be aligned after chassis and antenna are mounted in cabinet.

TUBE AND TRIMMER LOCATION

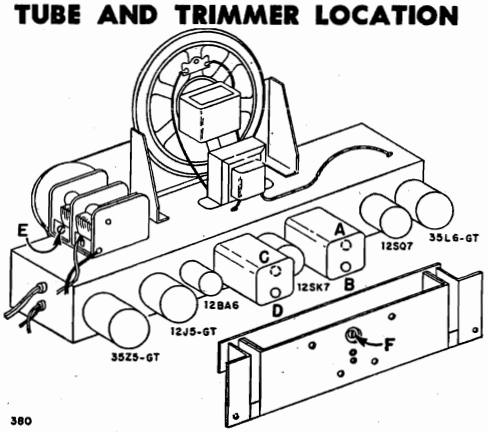

Adjustments A and C made from underside of chassis.

DIAL STRINGING AND POINTER SETTING

Dial stringing and pointer with solid lines shown with gang closed. Dashed line pointer positions (1400 KC and 900 KC) shown when tuning condenser is tuned to generator signal.

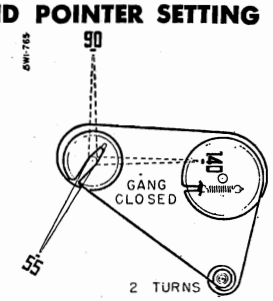

RECORD CHANGER SERVICE DATA

The changer model number will be found stamped at the top rear of the changer base. Complete service information and parts list for the RC500 record changer is contained in Record Changer Service Manual (form number S298).

Cartridge and Needle

As shown in the illustrations, alternate cartridges may be used. Cartridges are interchangeable when complete with needle.

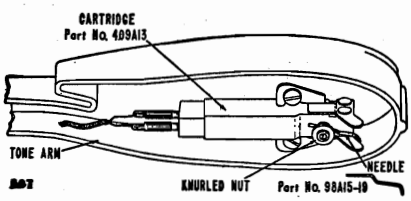

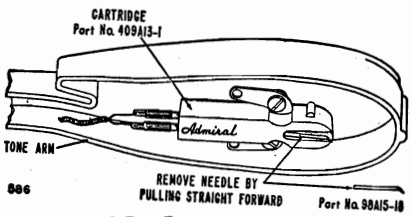

RECORD CHANGER: Model RC500, see page RCD.CH.21-1.

©John F. Rider

Compliments of www.nucow.com

MODELS AR-250MU, AR-251BU, AR-252MU, AR-253BU, AR-254MU, AR-255BU

Models AR250MU, AR252MU, AR254MU
(Mahogany)

Models AR251BU, AR253BU, AR255BU
(Blond)

DESCRIPTION

TYPE: Eight-tube, two-band, superheterodyne.

FREQUENCY RANGE: Standard Broadcast Band; 540 to 1620 kc. (Selector Switch at middle position).

Frequency Modulation Band; 88 to 108 megacycles (Selector Switch to right).

INTERMEDIATE FREQUENCY: Standard Broadcast Band; 455 kc.

Frequency Modulation Band; 10.7 mc.

FM ANTENNA INPUT IMPEDANCE: 75 ohms balanced.

POWER SUPPLY: a. c. only.

VOLTAGE RATING: 105-125 volts.

POWER CONSUMPTION: 60 watts at 117 volt power supply; 20 watts additional for record changer.

POWER OUTPUT: 3.2 watts maximum.

TUBE COMPLEMENT:

Type	Function
6BA6	R. F. Amplifier (AM & FM)
12AT7	Oscillator & Mixer (FM)
6BA6	I. F. Amplifier (AM & FM)
6BA6	2nd I. F. Amplifier (FM)
6T8	Ratio Detector (FM) Diode Det. & AVC (AM) Audio Amp. (AM & FM)
6BE6	Converter (AM)
7A5	Audio Output
5Y3GT	Rectifier

DIAL BULB: Type 47, 6.3 volts, .15 amp.

ALIGNMENT PROCEDURE

This receiver has been aligned at the factory for best performance and no attempt should be made to realign it unless the proper test equipment is available.

1. Turn the tuning condenser to full mesh, against stop, and set the dial pointer to line up with the right hand vertical portion of the "M" in "AM" and "FM", located to the left of 55 on the dial.
2. Set the tone control knob to the full treble position (extreme right).
3. For Amplitude Modulated signal readings, connect output meter across voice coil (3.2 ohms).
4. All Amplitude Modulated input signals are modulated 30% at 400 cycles with the High side of the signal generator connected to receiver as indicated in the alignment chart. Connect the low side of signal generator to the receiver chassis.
5. All Frequence Modulated signals are modulated 30% at 400 cycles. 30% modulation is equal to a deviation of 22.5 kilocycles. Connect the Frequence Modulated signal generator as indicated in the alignment chart.

©John F. Rider

Compliments of www.nucow.com

MODELS AR-250MU, AR-251BU,
AR-252MU, AR-253BU,
AR-254MU, AR-255BU

6. Turn the volume control to maximum clockwise position and adjust signal generator output to produce a noticeable output meter reading. Keep signal generator output as low as possible to prevent AVC action in the receiver.
7. For F. M. alignment, the loop antenna must remain connected, or a suitable dummy antenna must be connected in its place (See F.M. Dummy Antenna diagram).

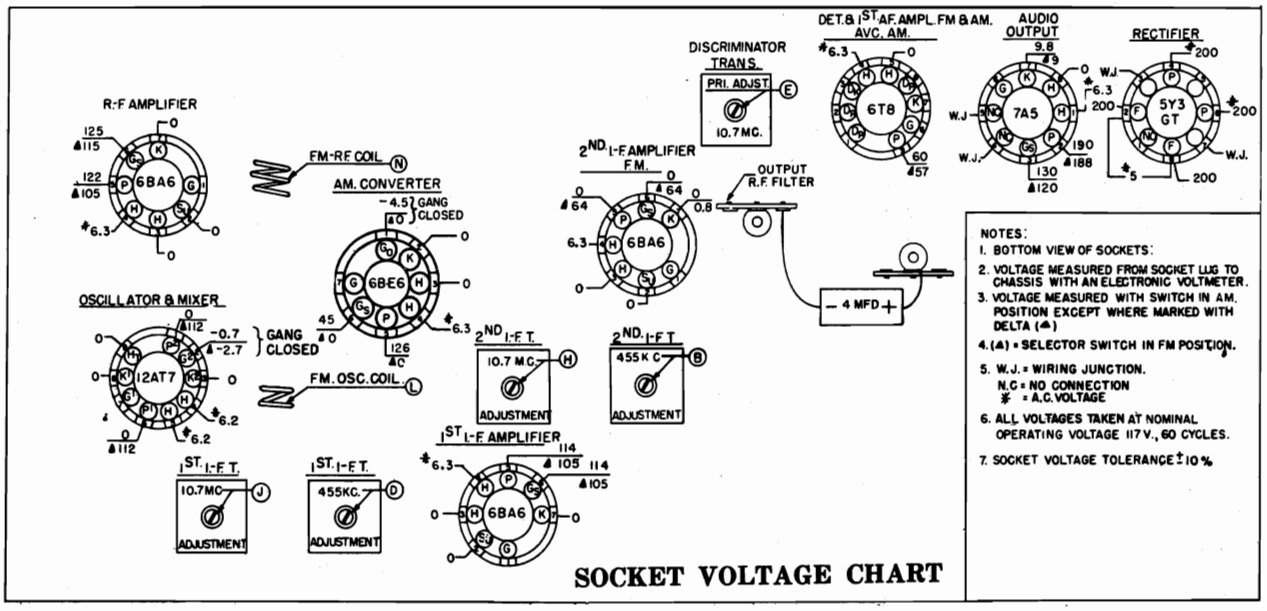

SOCKET VOLTAGE CHART

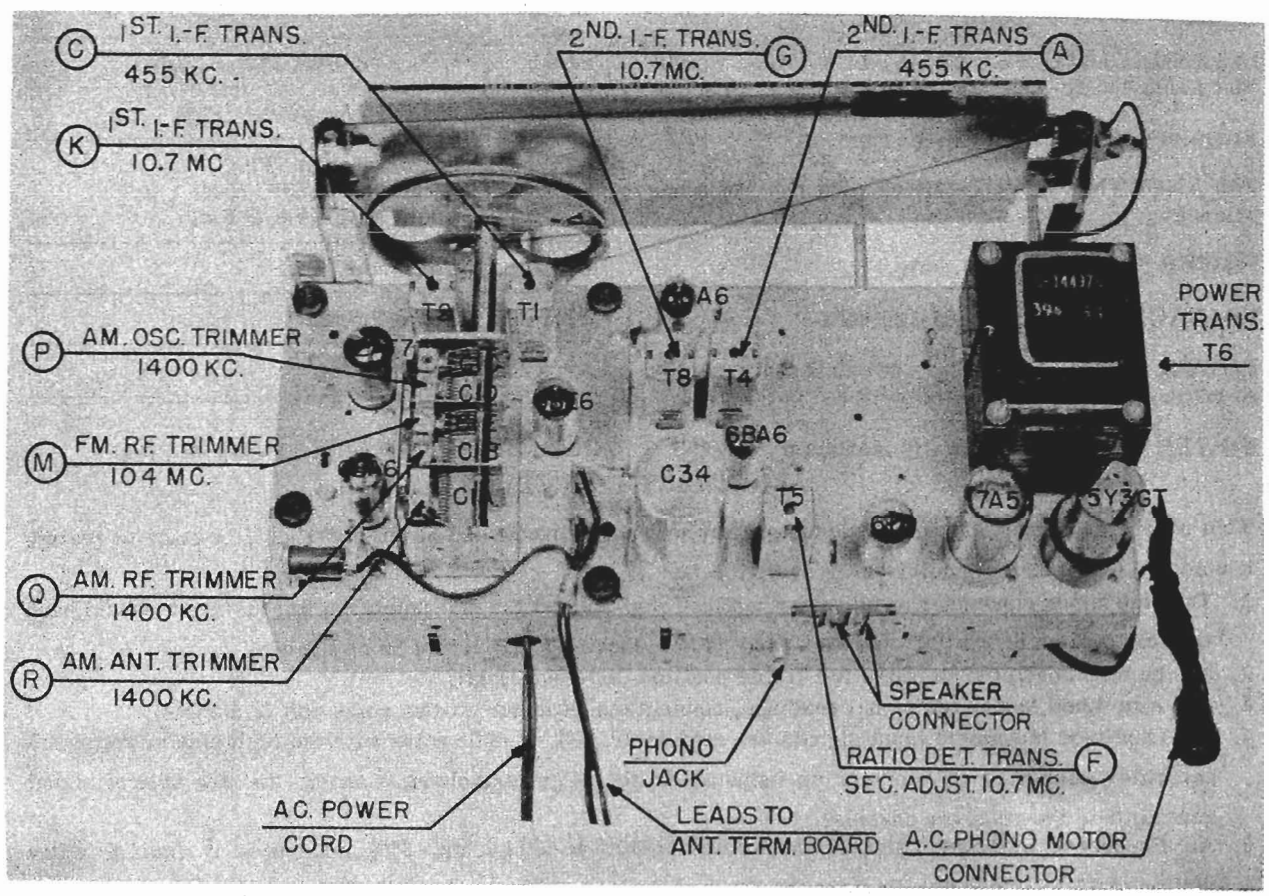

CHASSIS TOP VIEW SHOWING ALIGNMENT ADJUSTMENTS

©John F. Rider

Compliments of www.nucow.com

MODELS AR-250MU, AR-251BU,
AR-252MU, AR-253BU,
AR-254MU, AR-255BU

ALIGNMENT CHART

Alignment Sequence	Signal Generator Output			Position of		Adjust	Type of Selectivity Curve	Remarks
	Frequency	In Series With	To	Range Sw.	Tuning Dial or Tun. Cap.			
1	455 kc.	.01 mfd.	Stator plates of C1B	AM	Open	A & B	Single Peak	
2	455 kc.	.01 mfd.	Stator plates of C1B	AM	Open	C & D	Single Peak	
3	10.7 mc.	.01 mfd.	2nd I-F Grid pin 1 V4	FM	Open	E		See note 1
4	10.7 mc.	.01 mfd.	2nd I-F Grid pin 1 V4	FM	Open	F		See note 2
5	Repeat steps 3 and 4							Remove the two 100K ohm resistors after alighment.
6	10.7 mc.	.01 mfd.	1st I-F Grid pin 1 V3	FM	Open	G & H retouch E		See note 3
7	10.7 mc.	.01 mfd.	Stator plates of C1E	FM	Open	J & K		See note 4
8	Readjust G & H and J & K for maximum gain							See note 4
9	98 mc.	F.M. Dummy Ant.	Dipole Ant. Terminals	FM	98 mc.	L		See note 5
10	104 mc.	F.M. Dummy Ant.	Dipole Ant. Terminals	FM	104 mc.	M		See note 6
11	92 mc.	F.M. Dummy Ant.	Dipole Ant. Terminals	FM	92 mc.	N		See note 7
12	Repeat steps 10 and 11 until no further improvement in sensitivity is noted.							
13	1400 kc.	30 mmf.	Ext. Ant. Term. or A.M. Dummy Ant.	AM	1400 kc.	P		See note 8
14	1400 kc.	30 mmf.	Ext. Ant. Term. or A.M. Dummy Ant.	AM	1400 kc.	Q & R		See note 8

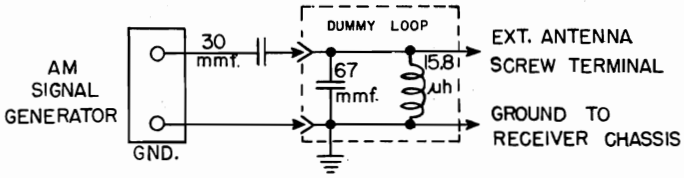

A. M. DUMMY ANTENNA

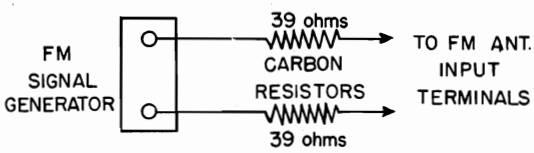

F. M. DUMMY ANTENNA

©John F. Rider

Compliments of www.nucow.com

MODELS AR-250MU, AR-251BU,
AR-252MU, AR-253BU,
AR-254MU, AR-255BU

ALIGNMENT NOTES

1. Connect two 100,000 ohm, 5%, carbon resistors (part no. 39375-97) in series, from pin 2 of V5 to ground. Then, connect an electronic voltmeter (negative polarity) across these resistors. Adjust "E" of T5 for maximum meter reading.

2. With the two 100,000 ohm resistors still connected as explained in note 1, connect the electronic voltmeter from the center junction of the resistors to the junction of R26 and R29. Adjust "F" of T5 for zero volts, first using a high scale on the voltmeter and then the lowest scale to obtain close balance.

3. Connect the electronic voltmeter from pin 2 of V5 to ground. Then adjust "G" and "H" of T3 for maximum meter reading. Retouch "E" of T5 for maximum meter reading.

4. With the voltmeter connected as for note 3, adjust "J" and "K" of T1 for maximum meter reading.

5. Adjust turns on F.M. oscillator coil by spreading apart or squeezing together, as required to make the 98 megacycle signal fall on 98 megacycles on the dial. See F.M. Dummy Antenna diagram.

6. Rotate variable capacitor rotor plates slightly back and forth while adjusting "M" to obtain maximum meter reading. See F.M. Dummy Antenna diagram.

7. Adjust turns on R.F. coil until maximum meter reading is obtained. See F.M. Dummy Antenna diagram.

8. Adjust for maximum output. See A.M. Dummy Antenna diagram.

MEGACYCLES TO CHANNEL NUMBERS "FM" BAND

Frequency in Megacycles	Channel No.	Frequency in Megacycles	Channel No.
87.9	200	98.9	255
88.9	205	99.9	260
89.9	210	100.9	265
90.9	215	101.9	270
91.9	220	102.9	275
92.9	225	103.9	280
93.9	230	104.9	285
94.9	235	105.9	290
95.9	240	106.9	295
96.9	245	107.9	300
97.9	250		

To find the frequency in megacycles for CHANNEL NUMBERS between those given above, add .2 megacycles for every whole number added to the CHANNEL NUMBER; for example Channel 204 would be 88.7 megacycles and 251 would be 98.1 megacycles.

©John F. Rider

Compliments of www.nucow.com

MODELS AR-250MU, AR-251BU,
AR-252MU, AR-253BU,
AR-254MU, AR-255BU

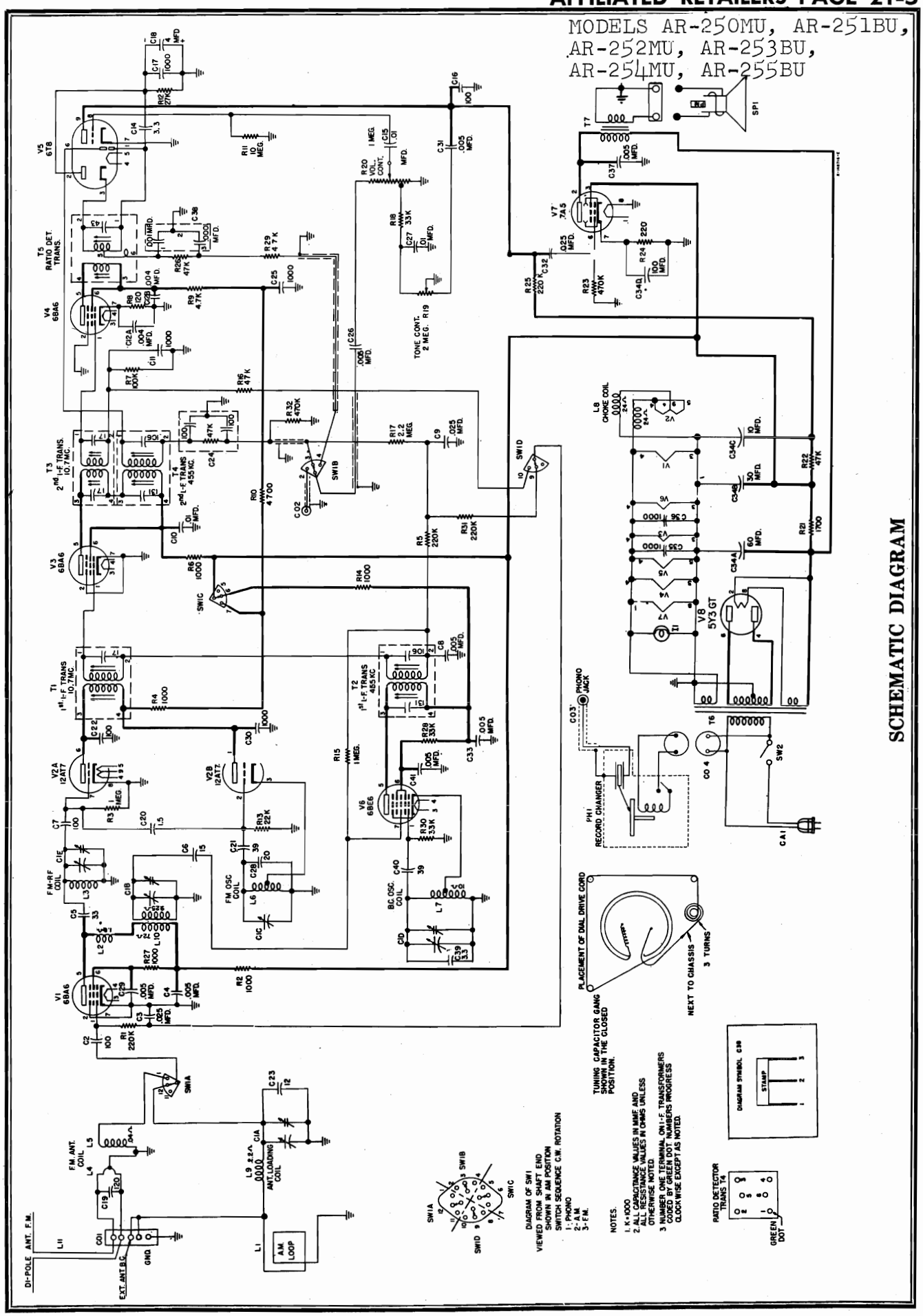

SCHEMATIC DIAGRAM

©John F. Rider

Compliments of www.nucow.com

MODELS AR-250MU, AR-251BU,
AR-252MU, AR-253BU,
AR-254MU, AR-255BU

REPLACEMENT PARTS LIST

Symbol No.	Part No.	Description
C1A	C-144962-3	Capacitor, Variable } Five Section
C1B		Capacitor, Variable
C1C		Capacitor, Variable
C1D		Capacitor, Variable
C1E		Capacitor, Variable
C2	C-137727-1	Capacitor, 100 mmf., 300 v., ceramic
C3	39001-81	Capacitor, .025 mfd., 600 v., paper
C4	C-144675-2	Capacitor, .005 mfd., 500 v., disc ceramic
C5	C-137727-87	Capacitor, 33 mmf., 500 v., ceramic
C6	C-137727-43	Capacitor, 15 mmf., 500 v., ceramic
C7	C-137727-1	Capacitor, 100 mmf., 300 v., ceramic
C8	C-144675-2	Capacitor, 5000 mmf., 500 v., disc ceramic
C9	39001-81	Capacitor, .025 mfd., 600 v., paper
C10	39001-13	Capacitor, .01 mfd., 600 v., paper
C11	C-137727-8	Capacitor, 1000 mmf., 300 v., ceramic
C12A	C-144675-6	Capacitor, .004 mfd., 500 v. } Two Section. Disc Ceramic
C12B		Capacitor, .004 mfd., 500 v.
C14	W-137398-5	Capacitor, 3.3 mmf., 500 v.
C15	39001-13	Capacitor, .01 mfd., 600 v., paper
C16	B-143686-3	Capacitor, 100 mmf., 500 v., molded disc ceramic
C17	C-137727-8	Capacitor, 1000 mmf., 300 v., ceramic
C18	B-142958	Capacitor, 4 mfd., 50 v., Electrolytic
C19	W-145913-1	Capacitor, 120 mmf., 5%, 500 v. ceramic
C20	W-137398-3	Capacitor, 1.5 mmf., 500 v.
C21	C-137727-109	Capacitor, 39 mmf., 10%, 200 v., ceramic
C22	C-137727-90	Capacitor, 100 mmf., 5%, 500 v., ceramic
C23	B-143686-8	Capacitor, 12 mmf., 500 v., molded disc ceramic
C24	C-142951-2	Capacitor - Resistor
C25	C-137727-8	Capacitor, 1000 mmf., 300 v., ceramic
C26	39001-11	Capacitor, .005 mfd., 600 v., paper
C27	39001-13	Capacitor, .01 mfd., 600 v., paper
C28	C-137727-99	Capacitor, 20 mmf., 2%, 500 v., ceramic
C29	C-144675-2	Capacitor, .005 mfd., 500 v., disc ceramic
C30	C-137727-8	Capacitor, 1000 mmf., 300 v., ceramic
C31	39001-11	Capacitor, .005 mfd., 600 v., paper
C32	39001-81	Capacitor, .025 mfd., 600 v., paper
C33	C-144675-2	Capacitor, .005 mfd., 500 v., disc ceramic
C34A	B-144990	Capacitor, 60 mfd., 300 v. } Four Section Electrolytic
C34B		Capacitor, 30 mfd., 300 v.,
C34C		Capacitor, 10 mfd., 300 v.
C34D		Capacitor, 100 mfd., 25 v.
C35	C-137727-8	Capacitor, 1000 mmf., 300 v., ceramic
C36	C-137727-8	Capacitor, 1000 mmf., 300 v., ceramic
C37	39001-11	Capacitor, .005 mfd., 600 v., paper
C38	C-144675-12	Capacitor, .001 mfd., 500 v. } Two Section. disc ceramic
C38		Capacitor, .0001 mfd., 500 v.
C39	W-137398-5	Capacitor, 3.3 mmf., 500 v.
C40	C-137727-109	Capacitor, 39 mmf., 10%, 200 v., ceramic
C41	C-144675-2	Capacitor, .005 mfd., 500 v., disc ceramic
R1	39373-80	Resistor, 220,000 ohm, 1/2 w.
R2	39373-33	Resistor, 1000 ohm, 1/2 w.
R3	39373-92	Resistor, 1 megohm, 1/2 w.
R4	39373-33	Resistor, 1000 ohm, 1/2 w.
R5	39373-80	Resistor, 220,000 ohm, 1/2 w.
R6	39373-33	Resistor, 1000 ohm, 1/2 w.
R7	39373-74	Resistor, 100,000 ohm, 1/2 w.
R8	39374-14	Resistor, 120 ohm, 10%, 1/2 w.
R9	39374-33	Resistor, 4700 ohm, 10%, 1/2 w.
R10	39373-47	Resistor, 4700 ohm, 1/2 w.
R11	39373-107	Resistor, 10 megohm, 1/2 w.
R12	39374-42	Resistor, 27,000 ohm, 10%, 1/2 w.
R13	39374-41	Resistor, 22,000 ohm, 10%, 1/2 w.
R14	39373-33	Resistor, 1000 ohm, 1/2 w.
R15	39373-92	Resistor, 1 megohm, 1/2 w.
R16	39373-67	Resistor, 47,000 ohm, 1/2 w.
R17	39373-97	Resistor, 2.2 megohm, 1/2 w.
R18	39373-64	Resistor, 33,000 ohm, 1/2 w.
R19	39368-11	Control, Tone (2 megohm)
R20	39368-18	Control, Volume (1 megohm, Tap 275,000 ohm)
	39369-1	Switch, Power
	39370-2	Shaft, Volume Control
R21	B-144857-3	Resistor, 1700 ohm, 10%, 7 w., W.W.
R22	39373-67	Resistor, 47,000 ohm, 1/2 w.
R23	39373-87	Resistor, 470,000 ohm, 1/2 w.
R24	39374-17	Resistor, 220 ohm, 10%, 1/2 w.
R25	39373-80	Resistor, 220,000 ohm, 1/2 w.
R26	39373-67	Resistor, 47,000 ohm, 1/2 w.
R27	39373-33	Resistor, 1000 ohm, 1/2 w.
R28	39373-64	Resistor, 33,000 ohm, 1/2 w.
R29	39373-47	Resistor, 4700 ohm, 1/2 w.
R30	39374-43	Resistor, 33,000 ohm, 10%, 1/2 w.
R31	39373-80	Resistor, 220,000 ohm, 1/2 w.
R32	39373-87	Resistor, 470,000 ohm, 1/2 w.
CA1	C-132300-2	Cable & Plug Assy., Power
I1	138437-1	Bulb (Dial), Type 47, 6.3 v., .15 amp.
CO1	AW-148639	Terminal Board, Antenna

Symbol No.	Part No.	Description
CO2	W-136998	Connector (Female), Phono
CO3	AW-143496	Shielded Wire Assy., Phono
CO4	B-139727-3	Connector & Wire Assy., Phono Motor
SP1	138762-5	Speaker, 10" P.M.
T1	C-145025-3	Transformer, 1st I.F. (10.7 mc)
T2	AC-139919-3	Transformer, 1st I.F. (455 kc)
T3	D-145025-1	Transformer, 2nd I.F. (10.7 mc)
T4	AC-139919-3	Transformer, 2nd I.F. (455 kc)
T5	C-145193	Transformer, Ratio Detector
T6	B-144970	Transformer, Power
T7	B-145088	Transformer, Output
L1	Not Stocked	Loop Antenna (270" - No. 22 Wire)
L2	AW-143837	Coil, Choke
L3	AW-145112	Coil, F.M.-R.F.
L4	B-143322	Coil, Antenna Primary (F.M.)
L5	AW-145104	Coil, Antenna Secondary (F.M.)
L6	AW-146004	Coil, Oscillator (F.M.)
L7	AW-145372	Coil, Oscillator (A.M.)
L8	AW-144967	Coil, Choke
L9	AW-148565	Coil, Antenna Loading
L10	AW-145993	Transformer, R.F.
SW1	W-148480	Switch, Band Selector
SW2	39369-1	Switch, Power
PH1	D-148279-1	Record Changer (V950)
	AB-148507	Background Assy., Dial
	148583	Baffle, Speaker
	143485	Bumper (Rubber), Doors
	R-148577	Cabinet (11-250MU, 11-252MU, 11-254MU)
	R-148603	Cabinet (11-251BU, 11-253BU, 11-255BU)
	W-136201	Clip, Dial Glass
	W-145510	Clip, Sub Chassis Mtg.
	W-136999-1	Connector (Male), Shielded Phono Wire
	W-136853	Cushion (Rubber), Dial Glass
	148561	Decal, Off-On-Vol-Tone
	148560	Decal, Tuning-Ph-AM-FM
	C-148587	Dial Glass (11-250MU, 11-251BU)
	C-148701	Dial Glass (11-252MU, 11-253BU, 11-254MU, 11-255BU)
	148605	Door, Radio } 1 Pair(11-251BU, 11-253BU, 11-255BU) Front, Drawer
	148579	Door, Radio } 1 Pair(11-250MU,11-252MU,11-254MU) Front, Drawer
	148608	Doors (1 pair), Record Compartment (11-251BU, 11-253BU, 11-255BU)
	148582	Doors,(1 pair), Record Compartment (11-250MU, 11-252MU, 11-254MU)
	C-145773-1	Escutcheon
	148609	Grille Cloth (11-251BU, 11-253BU, 11-255BU)
	148584	Grille Cloth (11-250MU, 11-252MU, 11-254MU)
	148611-1	Hinge (Upper Left - Lower Right), Door (11-251BU, 11-253BU, 11-255BU)
	146786	Hinge (Upper Left - Lower Right), Door (11-250MU, 11-252MU, 11-254MU)
	148611-2	Hinge (Lower Left - Upper Right), Door (11-251BU, 11-253BU, 11-255BU)
	146787	Hinge (Lower Left - Upper Right), Door (11-250MU, 11-252MU, 11-254MU)
	B-148643-1	Knob, Band Selector
	B-138540-7	Knob, Off-On-Vol., Tone, Tuning
	W-45580	Mounting (Rubber), Band Selector Switch; Speaker
	148610	Panel, Radio Dial (11-251BU, 11-253BU, 11-255BU)
	148586	Panel, Radio Dial (11-250MU, 11-252MU, 11-254MU)
	W-130076CL	Pin, Speaker Cable
	W-143769	Pointer, Dial
	148606	Pull, Handle (11-251BU, 11-253BU, 11-255 BU)
	148505	Pull, Handle (11-250MU, 11-252MU, 11-254MU)
	148607	Pull, Knob (11-251BU, 11-253BU, 11-255BU)
	148581	Pull, Knob (11-250MU, 11-252MU, 11-254MU)
	W-137939-2	Pulley (Idler), Dial Drive Cord
	W-137170	Retainer, Record Changer Mtg. Screw
	W-137940-1	Rivet, Dial Drive Idler Pulley
	W-144498-1	Screw, Escutcheon
	W-148501	Shaft, Dial Drive
	148604	Shelf Assy., Drawer (11-251BU, 11-253BU, 11-255BU)
	148578	Shelf Assy., Drawer (11-250MU, 11-252MU, 11-254MU)
	W-139040	Shock Mount, Sub Chassis Mtg.
	143478	Slide, Drawer
	D-136565-16	Socket, Dial Light
	W-142761	Socket, Tube (V1, V3, V4, V6)
	W-144732	Socket, Tube (V2)
	W-145607	Socket, Tube (V5)
	39232-1	Socket, Tube (V8)
	39441	Socket, Tube (V7)
	W-145757	Spring, Dial Drive Cord
	W-49829	Spring (Lock), Dial Drive Shaft
	W-143552	Strip, Dial Pointer

©John F. Rider

Compliments of www.nucow.com

MODEL 4G-420

Operating Instructions

POWER SOURCES: This combination will operate on an alternating (AC) current only, of 110 to 125 volts at 60 cycles.

CAUTION: Always predetermine voltage of power source. Never try to plug this combination into a 220 volt line, as this will cause serious damage.

Never try to operate this combination on 50 cycle current, as this will cause the motor to rotate at an incorrect speed. The normal speed is 78 R.P.M., (revolutions per minute) and to insure proper reproduction of recordings 60 cycle current must be used.

This receiver is equipped with a sensitive bank antenna and under ordinary conditions no external antenna would be required. However, in steel constructed buildings or in distant isolated locations, the reception may be improved by using an outside antenna. This should be a single wire not more than 50 feet long and should be connected to the antenna lead that projects from the back of the receiver. No ground wire is required at any time.

INSTALLATION: Unwind power cord and plug into a convenient power outlet. Follow instructions under "Controls" to operate receiver.

CONTROLS: Three controls are provided on the front panel for operation of this combination. The right hand control is the station selector which is used only in "Radio" operation. The left hand control is a switch which selects operation of either "Radio" or "Phonograph". The center control is used to adjust volume on either "Radio" or "Phonograph" and is also used as a power switch to turn the combination "On" or "Off."

RADIO RECEPTION: After the power cord plug has been connected to your power outlet, turn the center control to the right in a clockwise direction and a click will be heard. This indicates that the power is turned on, and the pilot light in the dial should begin to glow. After about 30 seconds, the set will be ready for operation.

Make sure that the left hand control is turned to the left, in "Radio" position. Turn the center control about halfway on, in a clockwise direction to increase volume. Rotate the right hand control to the right or left to select the desired station. By mentally adding a zero to the figures on the upper half of the dial, the result will be read directly in kilocycles (i.e., 60 plus 0 equals 600KC or 140 plus 0 equals 1400KC). After a station has been tuned in, adjust the center control to your desired volume.

PHONOGRAPH REPRODUCTION: To operate the phonograph, be sure that the left hand control is turned to the right. This puts the circuit in "Phonograph" position and also turns on the power for the motor. The center control must also be turned on (as in Radio instructions) as it is the master control for power to the radio receiver and phonograph motor.

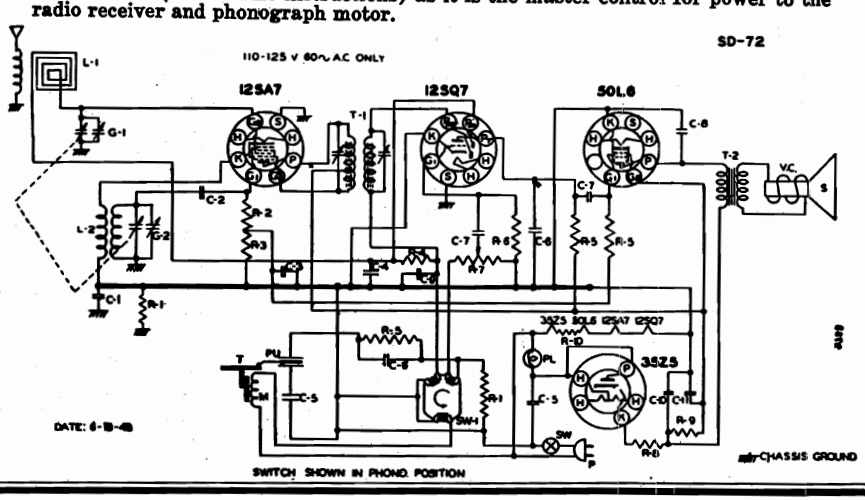

ALIGNMENT AND SERVICE DATA

Remove chassis from cabinet for alignment.

A Signal Generator is required having the following frequencies: 455 KC, 1400 KC, 1720 KC. An output meter should be connected across the speaker.

The receiver volume control should be turned to maximum during the I.F. and all subsequent alignments to keep the AVC from working and giving false readings. Keep the generator output as low as possible to prevent overloading.

FIRST STEP: Connect the hot lead from the generator to the ANT. section of the gang condenser, through a .1 MFD condenser. The ground lead from the generator must be connected to the floating ground buss under the chassis. Turn the gang condenser to complete minimum capacity. Adjust the generator to 455KC and adjust the trimmers of the 1st and 2nd I.F. transformers until a maximum reading is noted on the output meter.

SECOND STEP: With the leads from the generator still connected in the same manner, adjust the Signal Generator to 1720 KC. The OSC. trimmer is located on the front of the chassis. Adjust this trimmer until the 1720 KC signal is tuned in.

THIRD STEP: Remove the hot lead of the generator from the ANT section of the gang condenser. Connect this lead to the primary of the loop antenna through a 200 MMFD condenser. Adjust the Signal Generator to 1400 KC. Rotate the tuning control until this signal is tuned in. The ANT trimmer is located on the top of the ANT. section of the gang condenser. Adjust this trimmer until a maximum reading is noted on the output meter. No further adjustment should be necessary, unless the set has been damaged, as the coils and condenser in this receiver have been specially handled at the factory to insure proper alignment at the lower frequencies.

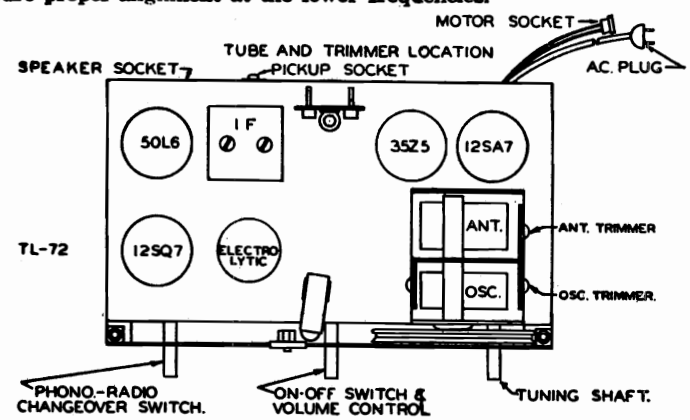

PART NO.		DESCRIPTION	PART NO.		DESCRIPTION
IR-20	R-1	220M Ω RESISTOR 1/2W 20%		SW	SWITCH ON VOLUME CONTROL
IR-9	R-2	22M Ω RESISTOR 1/2W 20%	SW-1	SW-1	RADIO-PHONO. SWITCH
IR-10	R-3	47M Ω RESISTOR 1/2W 20%	LI-8	T-1	IF TRANSFORMER
IR-23	R-4	3.3MEG. Ω RESISTOR 1/2W 20%		T-2	OUTPUT TRANSFORMER
IR-11	R-5	470K Ω RESISTOR 1/2W 20%	SPK-10	VC	VOICE COIL
IR-3	R-6	10MEG. Ω RESISTOR 1/2W 20%		S	4" PM SPEAKER
VC-4	R-7	1MEG. VOLUME CONTROL	LL-19	L-1	LOOP ANT
IR-17	R-8	33 Ω RESISTOR 1/2 W 20%	LO-14	L-2	OSC COIL
IR-25	R-9	2200 Ω RESISTOR 1 W. 10%	M-2	M2	110V 60 CYCLES. MOTOR
IR-41	R-10	47 Ω RESISTOR 1 W 10%	PU-5	PU	TONE ARM WITH L-75 CARTRIDGE
PC-8	C-1	.1MFD. CONDENSER 400 V	PB-1	PL	#47 PILOT BULB
MC-4	C-2	50MMFD. MICA	CO-1A	P	LINE CORD
PC-2	C-3	.25MFD. CONDENSER 200 V.	TT-2	T	8" TURNTABLE
PC-2	C-4	.03MFD. CONDENSER 200 V.			
PC-5	C-5	.05MFD. CONDENSER 400 V	GC-6	G-1	GANG CONDENSER
MC-8	C-6	500MMFD. MICA		G-2	
PC-10	C-7	.005 MFD. CONDENSER 400 V			
PC-7	C-8	.01MFD. CONDENSER 400 V			
MC-2	C-9	100MMFD. MICA			
	C-10	40MFD.			
EC-12	C-11	20MFD. ELECTROLYTIC			

© John F. Rider

Compliments of www.nucow.com

MODELS 5F-600,
5F-601

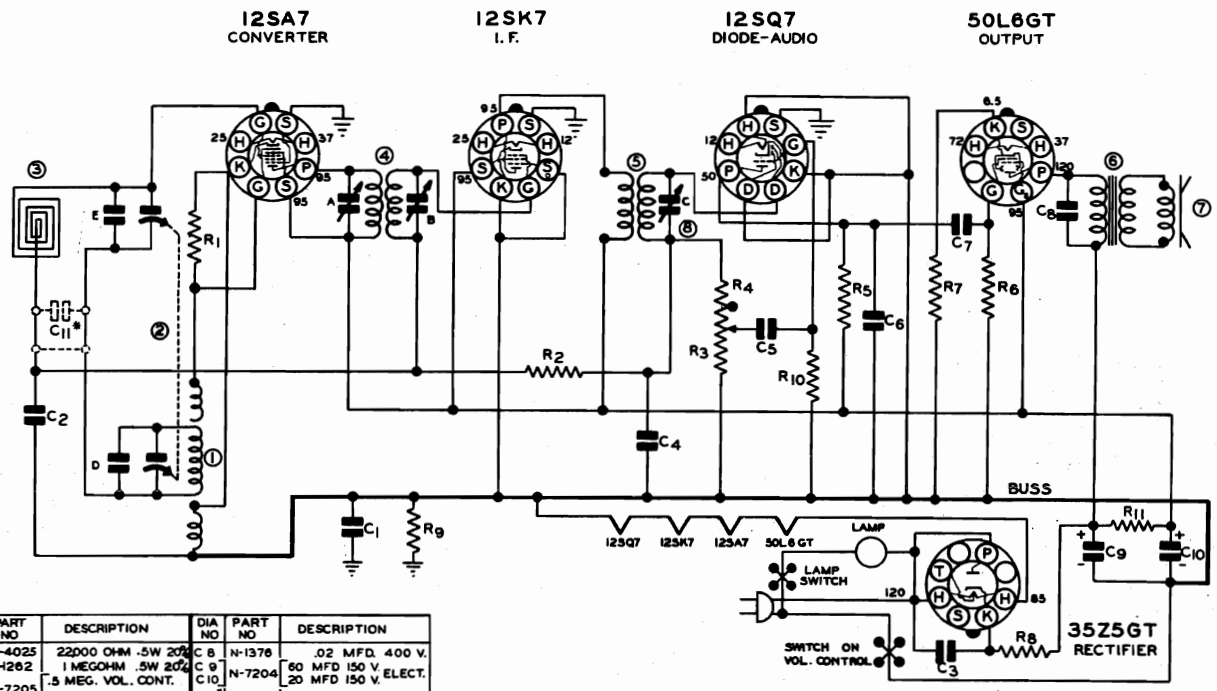

DIA NO	PART NO	DESCRIPTION
R1	N-4025	22,000 OHM .5W 20%
R2	N-1262	1 MEGOHM .5W 20%
R3	N-7205	.5 MEG. VOL. CONT.
R4		IN VOLUME CONTROL
R5	N-4026	220,000 OHM .5W 20%
R6	N-4027	470,000 OHM .5W 20%
R7	N-6244 OR N-4024	220 OHM .5W 10% / 220 OHM .5W 10%
R8	N-6258	47 OHM LOW 10%
R9	N-4026	220,000 OHM .5W 20%
R10	N-4028	6.8 MEGOHM .5W 20%
R11	N-4900	1200 OHM LOW 10%
C1	N-1345	.05 MFD 200 V.
C2	N-1345	.05 MFD 200 V.
C3	N-1346	.05 MFD 400 V.
C4	N-6015	100 MMFD CERAMIC
C5	N-4894	005 MFD 600 V.
C6	N-6135	250 MMFD CERAMIC
C7	N-1344	.01 MFD 400 V.

DIA NO	PART NO	DESCRIPTION
C8	N-1376	.02 MFD. 400 V.
C9	N-7204	60 MFD 150 V. ELECT.
C10		20 MFD 150 V.
C11*	N-1345	.05 MFD. 200 V. USED IN SOME MODELS
	N-2094	LAMP SWITCH
	N-2595	25W. T-10 110V. LAMP
1	N-7139	OSCILLATOR COIL
2	N-7203	2 GANG CONDENSER
3	N-7199	ANT. LOOP COIL
4	N-4813	1ST. I.F.
5	N-4846	2ND I.F.
6	N-7197 OR	SPK'R & OUTPUT XFMR
7	N-7198	
8	N-4985	2ND I.F. TRIMMER

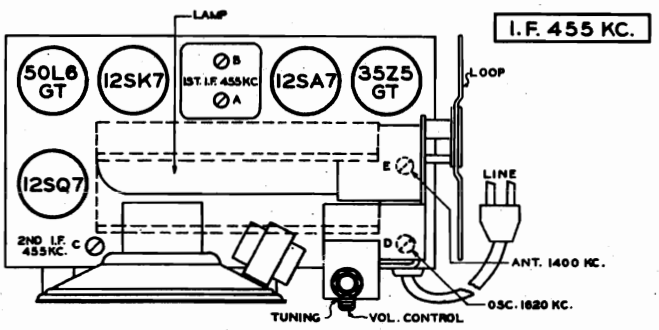

This receiver is designed to operate over the standard broadcast band which extends from 535 to 1620 Kilocycles (KC) (185 to 560 Meters.)

ALIGNMENT PROCEDURE

GENERAL DATA. The alignment of this receiver requires the use of a test oscillator that will cover the frequencies of 455, 600, 1400 and 1620 KC and an output meter to be connected across the primary or secondary of the output transformer. If possible, all alignments should be made with the volume control on maximum and the test oscillator output as low as possible to prevent the AVC from operating and giving false readings.

CORRECT ALIGNMENT PROCEDURE. The intermediate frequency (I.F.) stages should be aligned properly as the first step. After the I.F. transformers have been properly adjusted and peaked, the broadcast band should be adjusted.

I.F. ALIGNMENT. Remove the chassis and loop antenna from the cabinet and set them up on the bench so that they occupy exactly the same respective positions on the bench as they did in the cabinet. Care should be taken to have no iron or other metal near the loop. Do not make this set-up on a metal bench. With the gang condenser set at minimum, adjust the test oscillator to 455 KC and connect the output to the grid of the converter tube (12SA7) through a .05 or .1 mfd. condenser. The ground on the test oscillator should be connected to the ground buss, indicated on the circuit diagram. Align all three I.F. trimmers to peak or maximum reading on the output meter.

BROADCAST BAND ALIGNMENT. Connect the test oscillator to a dummy loop which can be made by coiling 2 turns of hookup wire about 6" in diameter. Place this dummy loop about a foot from the loop on the receiver and in the same plane as the receiver loop. With the gang condenser set at minimum capacity, set the test oscillator at 1620 KC, and adjust the oscillator (or 1620 KC trimmer) on the gang condenser. Next—set the test oscillator at 1400 KC, and tune in the signal on the gang condenser. Adjust the antenna trimmer (or 1400 KC trimmer) for maximum signal. Next set the test oscillator at 600 KC, and tune in signal on condenser to check alignment of coils.

©John F. Rider

Compliments of www.nucow.com

MODELS 5H-605, 5H-606

CONNECTING THE SET

POWER SUPPLY. This receiver is designed to operate on an alternating current supply (AC) ranging from 110 to 120 volts, 60 Cycles only. *Do Not Operate on Direct Current.*

Before connecting the set be sure that your house is wired for the voltage and current for which the set is designed. If in doubt, call your local power company for the necessary information. Connecting the set to a supply outlet furnishing the wrong type of current will result in improper operation or damage.

ANTENNA. This receiver has a built-in "loop" aerial. Its excellent design is such as to increase pick-up from stations having wide variations in signal strength. The efficiency and selectivity of the loop provide outstanding reception without the use of an external aerial.

TUBES. Five tubes (including rectifier) are used. Type numbers and locations are shown in the tube location diagram on the bottom of the cabinet.

GROUND. No ground connection should be used when operating this receiver. The receiver gets its ground connection through the power line and any external connection to the chassis may cause a short circuit and consequent damage.

CAUTION. Do not place receiver on hot objects such as stoves, radiators, etc. Heat will damage the cabinet and the internal components of the receiver.

RADIO OPERATION

AUTO-OFF-ON SWITCH KNOB (Bottom of Clock Face). Turn this knob to the right (clockwise), so that the indicator points to "ON", to turn on the radio. To turn off the radio, turn this knob so that the indicator points straight up to "OFF"

VOLUME CONTROL KNOB (Bottom Knob on Front of Cabinet) This knob controls the volume of the signal received. To reduce the volume, rotate this knob to the left (counter-clockwise). When this knob is rotated to the right it will increase the volume.

STATION SELECTOR KNOB. (Large Knob on Front of Cabinet) Rotate this knob over a narrow range of the dial where the desired station is located, until the station is received with maximum volume and clarity. Then readjust the volume control to the proper level. NEVER use the station selector knob to adjust the volume as this will result in the signal being received with distorted tone quality.

The station selector knob is calibrated in Kilocycles with the last zero of the actual frequency omitted. For instance, the numeral 55 on the knob indicates 550 Kilocycles and 160 indicates 1600 Kilocycles.

OPERATION OF CLOCK

This clock-radio is equipped with a self-starting clock. As soon as the power plug is inserted into the wall outlet, the sweep second hand will begin to operate.

To set the time hands, rotate the knob located at the rear of the receiver so that the hands will rotate in a clockwise rotation. Once the clock is set, it needs no further attention unless you remove the plug or there is a power interruption.

The clock of this clock-radio is equipped to automatically turn on the radio at any time during the course of approximately 10-½ hours after the controls are properly set. The controls may be properly set by following the instructions itemized below:

1. SET TURN-ON TIME. Pull out and turn the knob at the top of clock face to the left (counter-clockwise) until the selected TURN-ON time is indicated on the small center dial by the small pointer on the opposite end of the hour hand.

   Leave this knob out if you wish the conventional alarm to turn on in addition to the radio. The conventional alarm will sound approximately seven minutes after the radio is turned on.

   If you prefer to have the radio turned on without the conventional alarm, push the knob in after the TURN-ON time is set.

2. SELECT PROGRAM TO BE TURNED ON. Tune in the station that will carry the desired program at the selected time, and adjust the volume to the proper level.

3. SET AUTO-OFF-ON SWITCH KNOB. Turn this knob to the left until the indicator points to "AUTO". This will turn off the radio and set the switch so that it automatically comes on again at the selected time.

To turn the radio on before the "TONE-ALARM" time, turn the AUTO-OFF-ON knob to the "ON" position. It will then be necessary to repeat the steps listed above to again use the alarm feature.

©John F. Rider

Compliments of www.nucow.com

MODELS 5H-605,
5H-606

USE OF "CONVENTIONAL ALARM"

The clock may be set to turn on the conventional buzzer alarm without turning on the radio. To accomplish this set the TURN-ON time as explained under "USE of TONE-ALARM" and leave the knob out from the cabinet. Set "AUTO-OFF-ON" switch knob to the "OFF" position. At the selected time, the buzzer will sound and will continue to sound until you turn it off by pushing knob all the way in.

USE OF TURN-ON FEATURE WITH EXTERNAL APPLIANCES

An electrical outlet is provided at the rear of the receiver to use the TURN-ON feature on any electrical appliance which operates on a 110-120 volt, 60 cycle power supply.

To use this outlet, simply plug in the appliance and set the controls on the clock the same as explained in the paragraph "USE OF TONE-ALARM" This will automatically start the appliance AND the radio at the selected time.

CAUTION: THE RATING OF THE EXTERNAL ELECTRICAL APPLIANCE MUST NOT EXCEED 660 WATTS.

Current is available at this outlet whenever the radio is turned on.

ALIGNMENT

Step No.	Position of Gang	Signal Generator Frequency	Generator Connection	Dummy Antenna	Adjustment	Type of Adjustment
1.	Open	455 KC.	Rear Gang Terminal	.1 Mfd.	I.F. Slugs	Adjust for Maximum Output
2.	Open	1620 KC.	Dummy Antenna	2 Turns of Hookup Wire 6" in Dia. (Place Approx. a Foot from & parallel to loop.)	Front Gang Trimmer	Adjust for Maximum Output
3.	1400 KC	1400 KC.			Rear Gang Trimmer	Adjust for Maximum Output
4.	600 KC	600 KC.				Check Gang Alignment

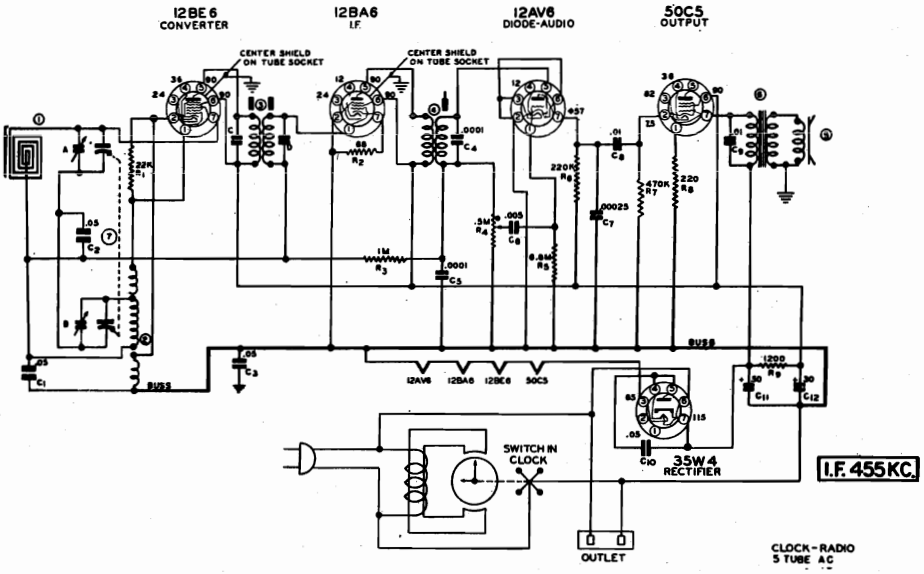

PARTS LIST

SCHEMATIC LOCATION	PART NUMBER	DESCRIPTION
C1,C2,C3	N-1345	Capacitor-Paper .05 MFD. 200 V
C4	N-7549	Capacitor-Ceramic 100 MMFD 500 V. 10%
C5	N-6015	Capacitor-Ceramic 100 MMFD 500 V. 20%
C6	N-4894	Capacitor-Paper .005 MFD. 600 V.
C7	N-6488	Capacitor-Ceramic 250 MMFD. 500 V. 20%
C8,C9	N-1344	Capacitor-Paper .01 MFD. 400 V.
C10	N-1346	Capacitor-Paper .05 MFD. 400 V.
C11)	N-7889	Capacitor-Electrolytic 50 MFD. 150 V.
C12)		30 MFD. 150 V
R1	N-4025	Resistor - 22,000 Ohm - 1/2W. - 20%
R2	N-6485	Resistor - 68 Ohm - 1/2W. - 10%
R3	N-1262	Resistor - 1.0 Megohm - 1/2 W. - 20%
R4	N-7957	Control - On-Off & Volume
R5	N-4028	Resistor - 6.8 Megohm - 1/2 W. - 20%
R6	N-4026	Resistor - 220,000 Ohm - 1/2W. - 20%
R7	N-4027	Resistor - 470,000 Ohm - 1/2W. - 20%
R8	N-4024	Resistor - 220 Ohm - 1/2W. - 10%
R9	N-4900	Resistor - 1,200 Ohm - 1.0W. - 10%
	N-7824	Speaker - 4" P.M. with Output Transformer
	N-7956	Coil - Loop Antenna
	N-7888	Coil - 1st, I.F.
	N-7542	Coil - 2nd, I.F.
	N-7139	Coil - Oscillator

©John F. Rider

Compliments of www.nucow.com

MODEL 6G-400

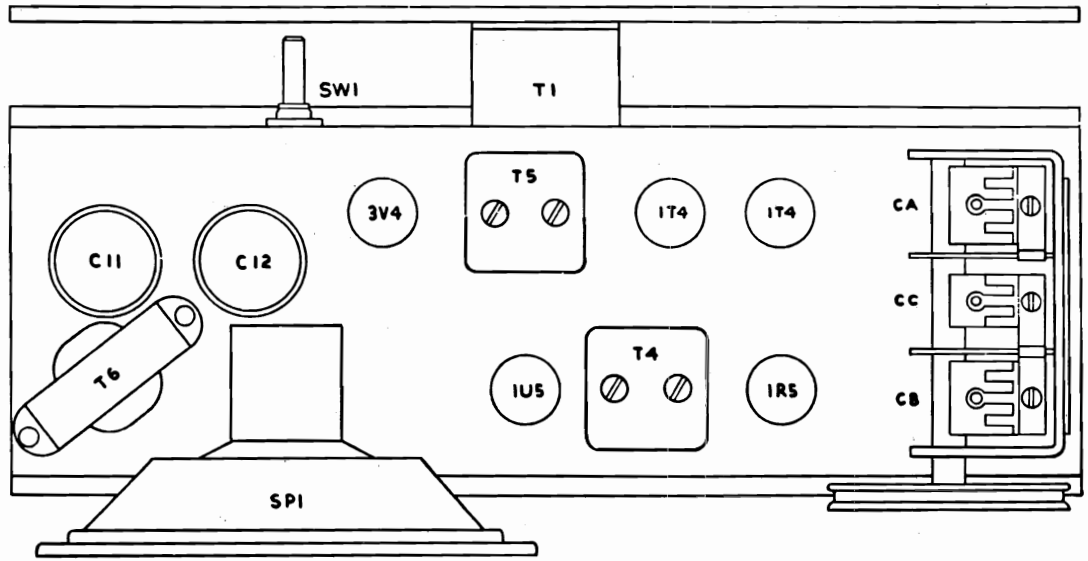

TOP VIEW

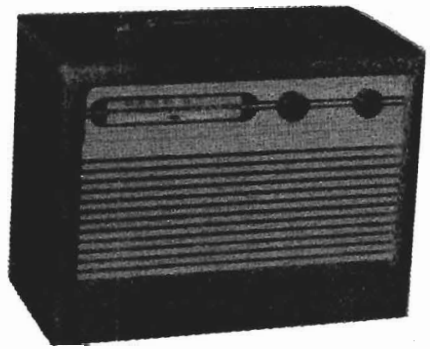

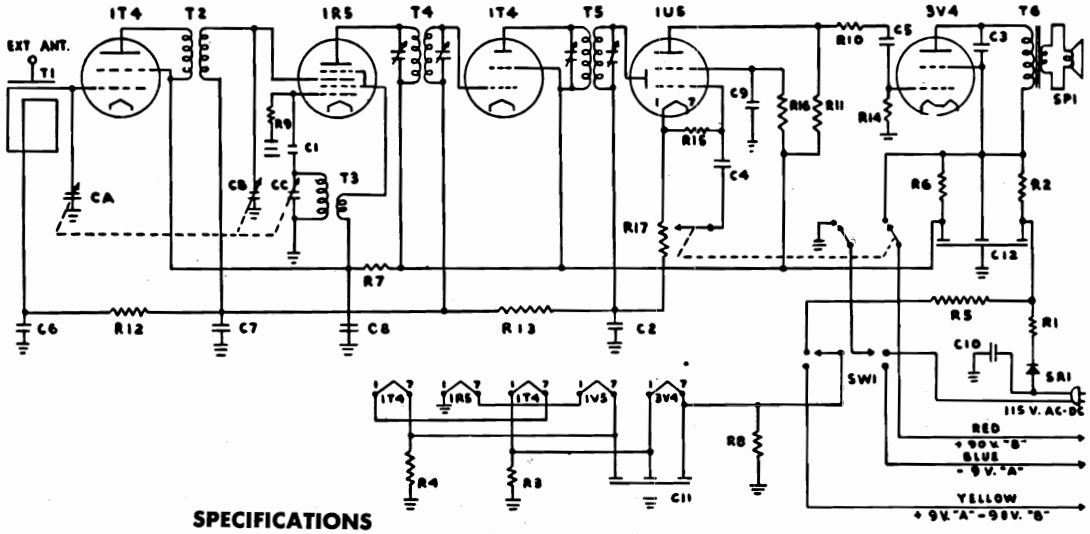

CIRCUIT DIAGRAM

C1 —.0001 MFD. 400 V. CONDENSER
C2 —.0001 MFD. 400 V. CONDENSER
C3 —.006 MFD. 400 V. CONDENSER
C4 —.01 MFD. 400 V. CONDENSER
C5 —.01 MFD. 400 V. CONDENSER
C6 —.05 MFD. 200 V. CONDENSER
C7 —.05 MFD. 200 V. CONDENSER
C8 —.05 MFD. 200 V. CONDENSER
C9 —.05 MFD. 200 V. CONDENSER
C10—.1 MFD. 400 V. CONDENSER
C11—50+50+50 MFD. 150V. COND.
C12—50+50+50 MFD. 150 V. COND.
C A-B-C — 3-GANG. CONDENSER

R1 —100 OHM — 5 W. RESISTOR
R2 —150 OHM — 1/2 W. RESISTOR
R3 —500 OHM — 1/3 W. RESISTOR
R4 —1200 OHM — 1/3 W. RESISTOR
R5 —2000 OHM — 10 W. RESISTOR
R6 —3000 OHM — 1/3 W. RESISTOR
R7 —5000 OHM — 1/3 W. RESISTOR
R8 —25M OHM — 1/3 W. RESISTOR
R9 —100M OHM — 1/3 W. RESISTOR
R10—100M OHM — 1/3 W. RESISTOR
R11—1Meg. OHM — 1/3 W. RESISTOR
R12—2Meg. OHM — 1/3 W. RESISTOR
R13—2Meg. OHM — 1/3 W. RESISTOR
R14—2Meg. OHM — 1/3 W. RESISTOR
R15—5Meg. OHM — 1/3 W. RESISTOR
R16—5Meg. OHM — 1/3 W. RESISTOR
R17—500M OHM POT.—1/3 WITH SWITCH

T1—LOOP ANT.
T2—RF COIL
T3—OSC. COIL
T4—455 KC INPUT I.F. COIL
T5—455 KC OUTPUT I.F. COIL
T6—OUTPUT TRANSFORMER
SW1—2 POLE 2 POS. SWITCH
SP1—5" PM. SPEAKER
SR1—SELENIUM RECTIFIER

ALIGNMENT PROCEDURE
I. F. Alignment 455 KC (Connect to 1R5 Grid) Loop and R. F. Alignment — 1400, 1000 and 600 KC. Dial Pointer Setting—535 KC with fully closed condenser.

SPECIFICATIONS

- Super-het circuit—455 KC I. F.
- Band coverage: 540 KC to 1700 KC.
- Five miniature tubes—plus selenium rectifier 1—1T4 R. F., 1—1R5 Mixer, 1—1T4 I. F., 1—1U5 Det. and 1st audio, 1—3V4 Pr. output (6-tube performance).
- Battery life—approximately 170 hours. Burgess No. F6A60, Eveready No. 753, Ray-O-Vac No. AB994.
- Five-inch P. M. dynamic speaker—1.47 oz. Alnico 5.

©John F. Rider

Compliments of www.nucow.com

Compliments of www.nucow.com

MODEL 101B,
Tuner

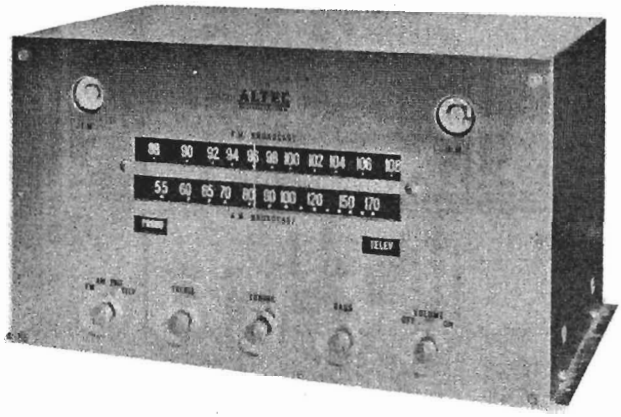

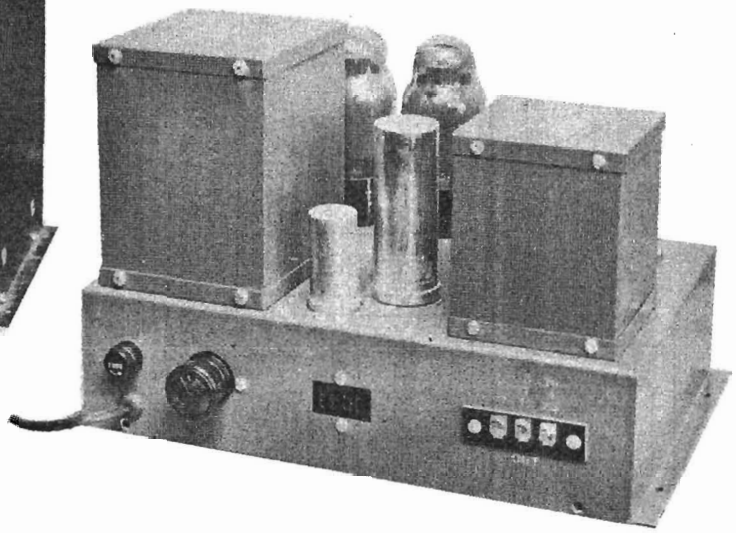

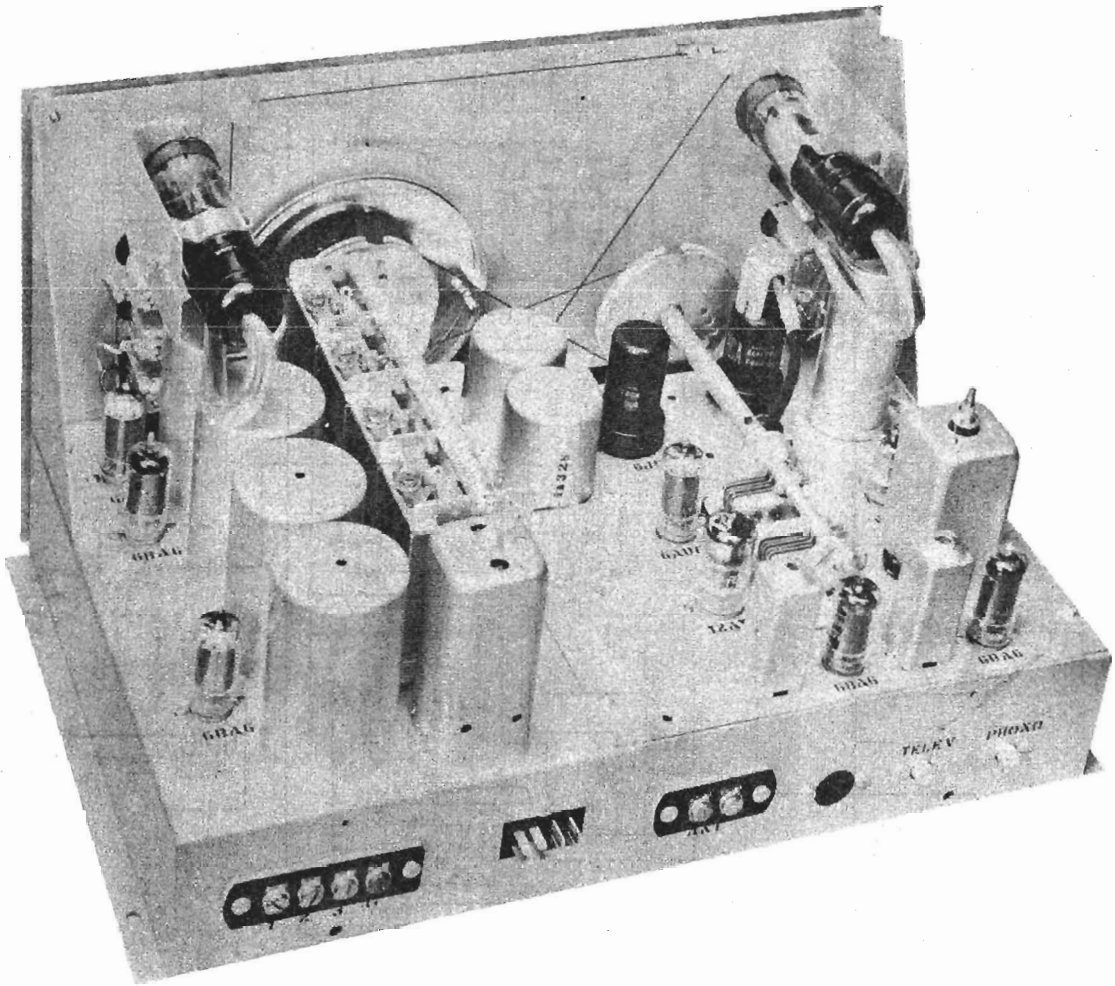

©John F. Rider

Compliments of www.nucow.com

MODEL 101B,
Tuner

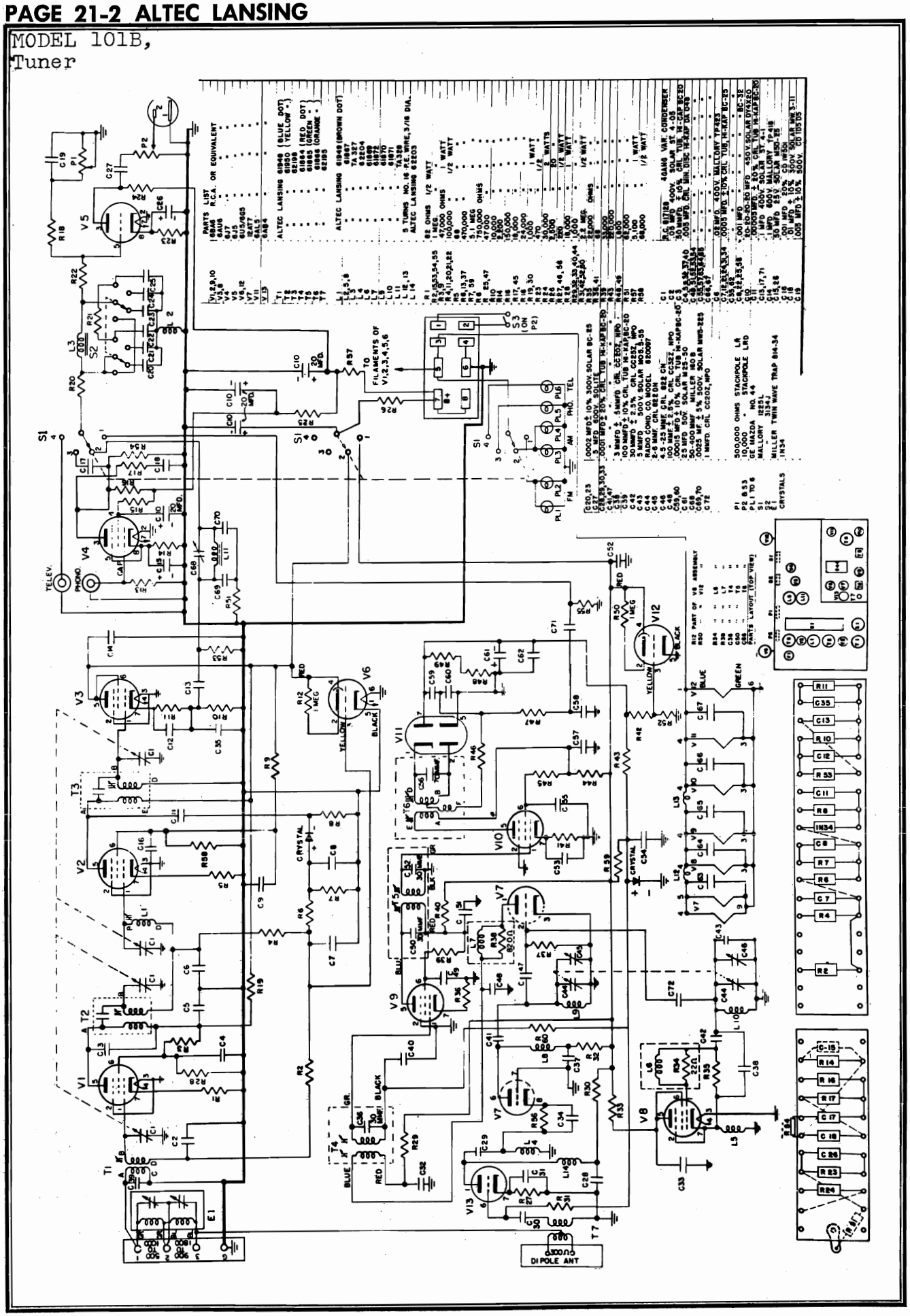

©John F. Rider

Compliments of www.nucow.com

(1) The FM Tuner employs six miniature tubes. The antenna is coupled to the RF stage through a broad band transformer having a high degree of balance. The RF stage consists of a 6AB4 tube and one half of a 12AT7 tube connected in "cascode". A 6AU6 tube is employed as a separate oscillator, the voltage being injected into the grid circuit of the second half of the 12AT7 tube, which operates as a mixer. Two stages of IF amplification, having a frequency of 10.7 megacycles, use 6BA6 tubes. The output of the second IF stage feeds the ratio detector which incorporates a 6AL5 tube. Delayed AVC gives good small signal sensitivity and is applied to the RF and first IF stages. The modified cascode circuit, a wartime "radar" development which is used as the RF amplifier, produces high signal gain with very low noise. The balanced antenna transformer, used as the coupling medium into this stage, gives a high degree of rejection to unwanted interference signals picked up by the antenna lead-in. The triode mixer is used since it has high gain and low noise compared to a pentagrid converter. Accurate tuning is aided by the use of a 6U5/6G5 electron tuning indicator. A half wave dipole antenna, having an impedance of 300 ohms is supplied with a sixty foot transmission cable. Maximum sensitivity of this unit is 5.5 microvolts with a quieting sensitivity of 12 microvolts.

(2) The AM Tuner covers the band of 514-1740 kilocycles. It is of the tuned radio frequency type, employing two 6AU6 type tubes in two stages. Complex coupling networks are used between the various networks to provide nearly constant gain and band width. The detector is of the infinite impedance type and the audio output is obtained across a portion of the cathode resistance. A.V.C. is obtained by means of a 1N34 Crystal and is applied to both RF stages. A separate 6U5/G5 Electron Tuning Indicator is used as an AM tuning indicator. A dual wave trap is provided at the input of the AM section, and is inserted by means of a link on the antenna terminal strip. One section of the trap covers the range from 500-1000 kilocycles. The second section covers the range from 900-1800 kilocycles. This trap provides optional attenuation at any portion of the band so that the signal from a strong interfering local station may be reduced to a point where other weaker stations may be received without interference.

(3) A single stage audio amplifier is provided with the necessary equalization for using a variable reluctance or similar type phonograph pickup. A four position selector switch is supplied to switch between AM-FM, phonograph, and an external connection which is labeled television. This high impedance, low gain input is intended for the audio portion of television, magnetic reproducer, or similar use. After the selector switch there is a bass tone control which gives a range of 15 db variation at 100 cycles. Immediately following the bass boost circuit is a treble tone control having four positions:

Position 1 provides flat response.
Position 2 inserts an 8 KC low pass filter.
Position 3 changes the low pass filter to 6000 cycle cut-off.
Position 4 provides 4000 cycle cut-off.

A sharp 10 KC dip filter is provided on the AM audio output so as to remove the heterodyne whistle of interfering stations. Immediately following the tone controls is a single-stage 6J5 audio output stage.

Model 101B Tuner dimensions: 15 inches wide
9½ inches high
11½ inches deep (Chassis 10 inches deep; plus protrude 1½ inches out of rear)

(4) The A-323C amplifier is a separate unit and consists of a pentode connected input stage, a phase inverter, and push-pull 6L6 stages with an output transformer having taps covering the range from 2.5-24 ohms. The output of the A-323C amplifier provides 15 watts with less than 8% intermodulation, and approximately 2% total harmonics at 60 cycles. This amplifier supplies the plate, filament, and pilot lamp power for the tuner chassis. Two interconnecting cables are provided for the power and speech circuits between the amplifier and tuner.

Model A-323C Amplifier dimensions: 13 inches wide
8½ inches high
9 inches deep

(5) Where average to strong signals are available, the FM dipole antenna can be used for both FM and AM by proper strapping on the terminal board. Where weak AM signals are available, it is recommended that a separate 10-30 foot antenna be used on AM.

©John F. Rider

Compliments of www.nucow.com

Compliments of www.nucow.com

MODELS 350-PB, 351-PB,
Ch. RE-267-1; 350-PL, 351-PL,
352-PL, 353-PL, Ch. RE-267-2

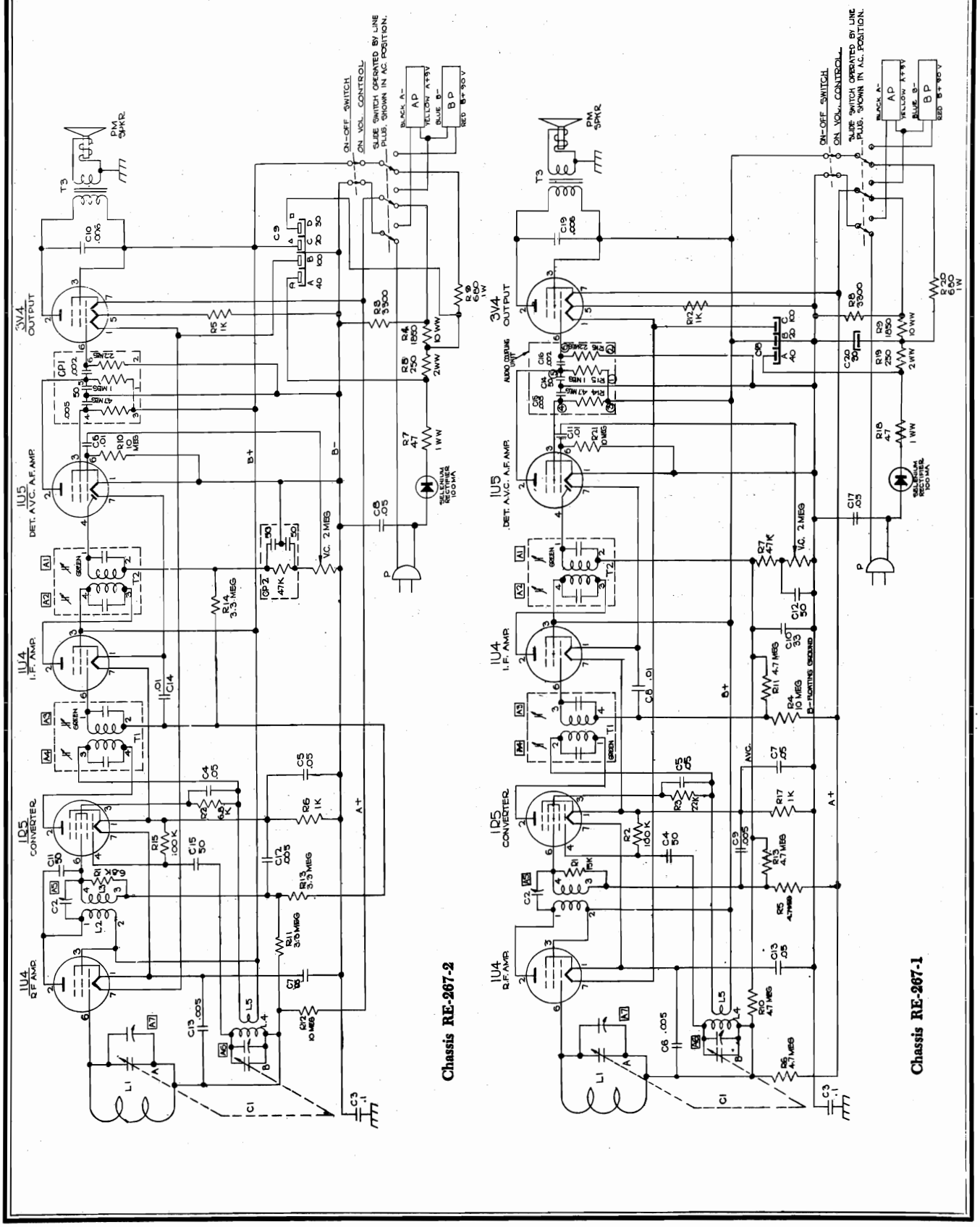

©John F. Rider

Compliments of www.nucow.com

MODELS 350-PB, 351-PB,
Ch. RE-267-1; 350-PL, 351-PL,
352-PL, 353-PL, Ch. RE-267-2

MODELS 350PB, 351PB, 350PL, 351PL, 352PL & 353PL, CHASSIS RE-267-1 & RE-267-2
5 TUBE AC-DC, BATTERY PORTABLE

Changes covered in this supplement —

1. 350-PB and 351-PB, Chassis RE-267-1, a modified version of the 350-P and 351-P made especially for areas where strong local signals caused overloading.
2. 350-PL, 351-PL, 352-PL and 353-PL, Chassis RE-267-2, a revised version of the 350-P and 351-P to improve it for all locations and relieve crowding of parts. These four models are identical except for color of cabinet and cabinet back assembly.

The only parts in the Parts List which are different from those on 350-P and 351-P are electrical chassis components and colored cabinet parts. The portions of the list which are changed are printed below.

PARTS LIST FOR 350-PL, 351-PL, 352-PL and 353-PL, CHASSIS RE-267-2

SCHEMATIC LOCATION	PART NO.	DESCRIPTION
R1, R2	C20060-682	Resistor, 6.8K, 1/4 W. 20%
R3	C20060-332	Resistor, 3300 ohms, 1/4 W. 20%
R4	A21816	Resistor, 1850 ohms, 10 W. 10%
R5, R6	C20060-102	Resistor, 1000 ohms, 1/4 W. 20%
R7	A19177	Resistor, 47 wire, 1 W. 10%
R8	A22777	Resistor, 250 wire, 2 W.
R9	C20070-681	Resistor, 680 ohms, 1 W. 10%
R10	C20060-106	Resistor, 10 meg., 1/4 W. 20%
R11, R13 R14	C20245-335	Resistor, 3.3 meg., 1/4 W. 5%
R12	C20245-106	Resistor, 10 meg., 1/4 W. 5%
R15	C20060-104	Resistor, 100K, 1/4 W. 20%
C1	AC22277	Variable Condenser Assembly
C2	A20275	Trimmer, 8-75 mmf.
C3	C20273-104	Condenser, P. T., .1 mg. 400 V.
C4, C5, C7	C20272-503	Condenser, P. T., .05 mf., 200 V.
C6	C20272-103	Condenser, P. T., .01 mf., 200 V.
C8	C20067-503	Condenser, P. T., .05 mf., 200 V.
C9A, B,C,D	A22879	Condenser, Electrolytic, 40-20-30 mfd., 150 V., 100 mfd., 10 V.
C10	C20273-602	Condenser, P. T. .006 mfd., 400 V.
C12, C13	A21674	Disc Ceramic Capacitor, .005 mfd.
C14	A22295	Disc Ceramic Capacitor, .01 mfd.
C15, C11	C20065-500	Condenser, Mica, 50 mmf., 500 V.
L2, L3	AC22912-1	RF Trans. Assy.
T1	C21797-5	First IF Transformer
T2	C21797-2	Second IF Transformer
CP1	A22257	Couplate
CP2	A22902	Couplate
L1	AD22258-3	Antenna Loop & Cabinet Back Assy. Sandelwood
L1	AD22258-4	Antenna Loop & Cabinet Back Assy. Burgundy
	AA22380-3	Cabinet Assy. Sandelwood
	AA22380-4	Cabinet Assy. Burgundy

PARTS LIST FOR 350-PB and 351-PB CHASSIS RE-267-1

SCHEMATIC LOCATION	PART NO.	DESCRIPTION
R1	C20271-153	Resistor, 15,000 ohm, 1/3 W. 20%
R2	C20271-104	Resistor, 100K, 1/3 W. 20%
R3	C20271-223	Resistor, 22K ohms, 1/3 W. 20%
R4	C20271-106	Resistor, 10 meg., 1/3 W. 20%
R5, R6, R10 R11, R13	C20271-475	Resistor, 4.7 meg., 1/3 W. 20%
R7	C20271-473	Resistor, 47K, 1/3 W. 20%
R8	C20060-332	Resistor, 3300 ohms, 1/4 W. 20%
R9	A21816	Resistor, 1850 ohms, 10 W. 10%
R14, R15, R16, C14		
C15, C16	A22257	Audio Coupling Unit
R17	C20271-102	Resistor, 1000 ohms, 1/3 W. 20%
R18	A19177	Resistor, 47 Wire, 1 W. 10%
R19	A22777	Resistor, 250 Wire, 2 W.
R20	C20070-681	Resistor, 680 ohms, 1 W. 10%
R21	C20271-106	Resistor, 10 meg., 1/3 W. 20%
VC	C22253	Volume Control & Switch, 2 meg.
C1	AC22277-1	Variable Condenser Assembly
C2	A20275	Trimmer, 8-75 uuf.
C3	C20273-104	Condenser, P. T., .1 uf., 400 V.
C4, C12	C20065-500	Condenser, Mica, 50 uuf., 500 V.
C5, C7, C13, C17	C20272-503	Condenser, P. T., .05 uf., 200 V.
C6, C9	A21674	Condenser, P. T., .005 uf.,
C8	A22295	Disc Ceramic Capacitor, .01 uf.
C10	C20065-330	Condenser, Mica 33 uuf., 500 V.
C11	C20272-103	Condenser, P. T., .01 uf., 200 V.
C18A, B, C	A21815	Condenser, Electrolytic, 40-20 mfd., 150 V., 100 mfd., 10 V.
C19	C20273-602	Condenser, P. T., .006 uf., 400 V.
C20	A21675	Condenser, Electrolytic 30 mfd., 150 V.
L1	AD22258-1	Antenna Loop & Cabinet Back Assy. Blue-Green
L1	AD22258-2	Antenna Loop & Cabinet Back Assy. Jade-Green
L2, L3	AC22256-1	R. F. Transformer Assembly
L4, L5	AC22255-1	Oscillator Coil Assembly

©John F. Rider

Compliments of www.nucow.com

MODEL 440T,
Ch. RE-278

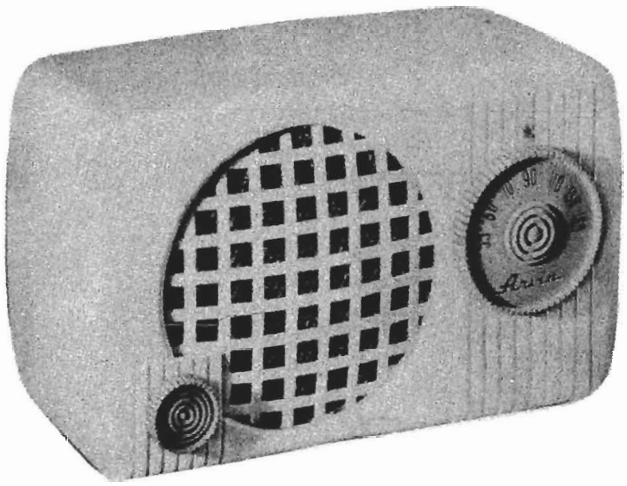

MODELS 440T

CHASSIS RE-278 — 4 TUBE AC — DC

ELECTRICAL AND MECHANICAL SPECIFICATIONS

FREQUENCY RANGE
- Broadcast ---------- 540-1600 kc
- IF ---------- 455 kc

TUBES AND FUNCTIONS
- 12SA7 ---------- Mixer-oscillator
- 12SQ7 ---------- Detector — AVC-AF.
- 50L6GT ---------- Output
- 35Z5GT ---------- Rectifier

POWER SUPPLY
- 105-125 Volts, AC-DC, 30 Watts

POWER OUTPUT
- Type: Beam tube
- Undistorted ---------- 1 Watt
- Maximum ---------- 1.85 Watts
- Plate Load ---------- 2000 Ohms

LOUD SPEAKER
- Type. Permanent magnet
- Size: 4 inch
- Voice coil impedance ---------- 3.2 Ohms

CHASSIS FEATURES
- Automatic Volume Control
- Underwriter's Listed

OPERATING CONTROLS
1. Upper knob ---------- Tuning
   Tuning ratio ---------- 1.1
2. Lower knob ---------- ON-OFF & Volume

GENERAL INFORMATION & SERVICE HINTS

POSITION OF POWER CORD PLUG.

On AC the power cord plug should be tried in both its possible positions in the receptacle, and left in the position that gives least hum. On DC the receiver will work in only one position of the plug in its receptacle.

THE ANTENNA

A 20 ft. antenna hank is attached to the receiver. In metropolitan areas it may be necessary to uncoil only a portion of the antenna to obtain satisfactory reception. For maximum pickup uncoil the antenna hank the full length. Do not attach it to a water pipe, radiator or other grounded object. So doing may result in hum and possibly a burned out antenna coil. If you are located some distance from a broadcasting station, or if local noise from electrical equipment is high, reception will be greatly improved by the addition of an outside antenna which may be connected to the end of the hank.

This receiver is designed to operate without a ground connection and no attempt should be made to use one.

CAUTION:

If any part of the antenna hank is located near the 12SA7 tube, the set is likely to oscillate, especially when the hank is not uncoiled.

ALIGNMENT PROCEDURE

PRELIMINARY.

- Output meter connection ---------- Across loudspeaker voice coil
- Output meter reading to indicate 500 milliwatts (standard output ---------- 1.26 volts
- Dummy antenna to be in series with signal generator output ---------- See chart below
- Connection of generator ground lead ---------- Floating ground
- Generator modulation ---------- 30% 400 cycles
- Position of Volume Control ---------- Fully clockwise

Position of Variable	Generator Frequency	Dummy Antenna	Generator Output Connection	Trimmers Adjusted	Trimmer Function	Approximate Sensitivity
Open	455 Kc	.05 uf.	12SA7 Grid (Stator of C-1)	A1 A2	IF	4000 uv.
1400 Kc	1400 Kc	.00005 uf.	Antenna Lug with Hank Removed	** A3	Oscillator	450 uv.

**Since the antenna section of the variable has no trimmer, the rotor of the variable should be rocked back and forth on both sides of 1400 Kc while adjusting the oscillator trimmer for maximum output. This is to obtain the combination of rotor and trimmer setting to give perfect tracking of the two sections of the variable condenser and consequently give maximum output.

Check sensitivity at 600 Kc. If weak, adjust antenna section plates for maximum output at 600 Kc. Tracking of the condenser at points other than 1400 Kc is accomplished by bending the outside plates on the variable condenser rotor, which are cut for this purpose. When bending plates to track the condenser at any given frequency, keep in mind the fact that this will effect the tracking at all frequencies below that point. A tuning wand is very helpful in checking the tracking of this condenser, to indicate whether more or less capacity is needed.

The alignment procedure should be repeated stage by stage in the original order for greatest accuracy.

Always keep the output from the test oscillator at its lowest possible value to make the AVC action of the receiver ineffective.

©John F. Rider

Compliments of www.nucow.com

MODEL 440T,
Ch. RE-278

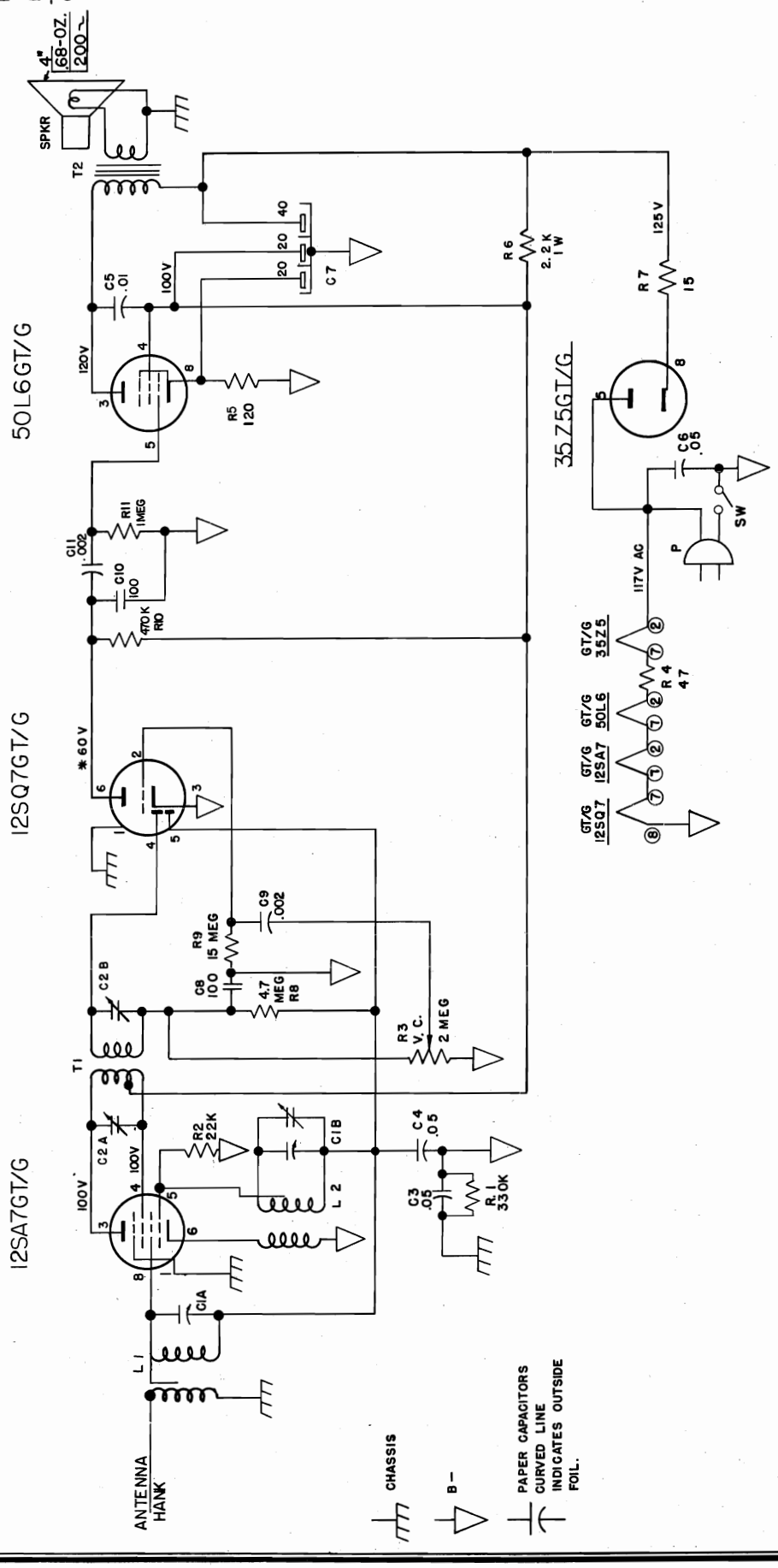

Tube sockets are viewed from under side of chassis. Voltage Readings shown at socket prongs are to floating ground, and are taken with no Signal. AC line voltage at 117 Volts AC.

* Measured with Vacuum tube voltmeter.

NOTE: Capacity Coupling is built in the antenna and oscillator coils. On some early Production sets, A 14 uuf. mica. Condenser will be used in place of the built in Capacity on the Antenna Coil.

© John F. Rider

Compliments of www.nucow.com

MODEL 440T,
Ch. RE-278

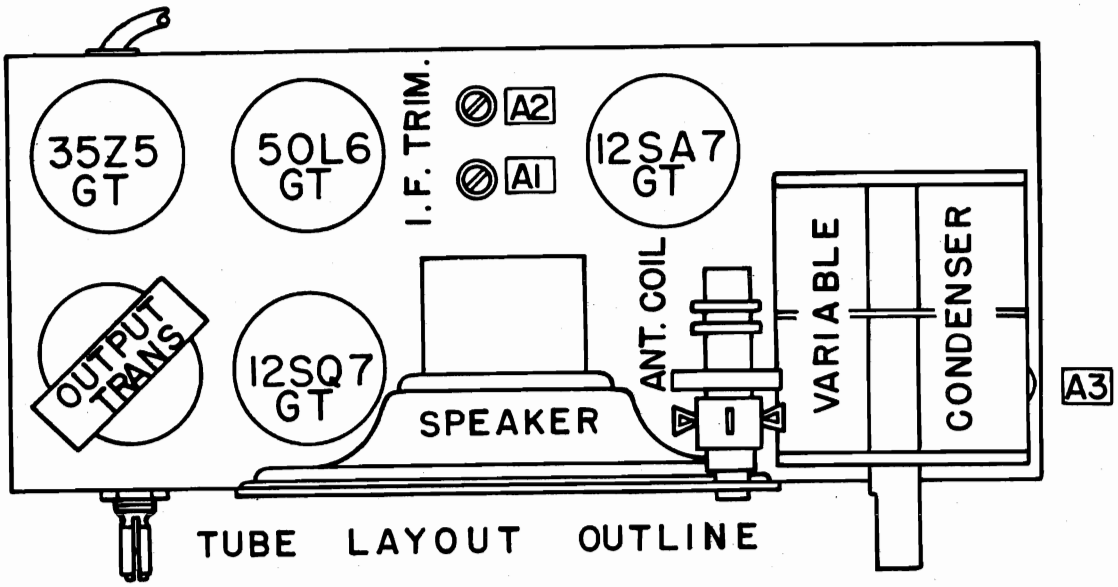

TUBE LAYOUT OUTLINE

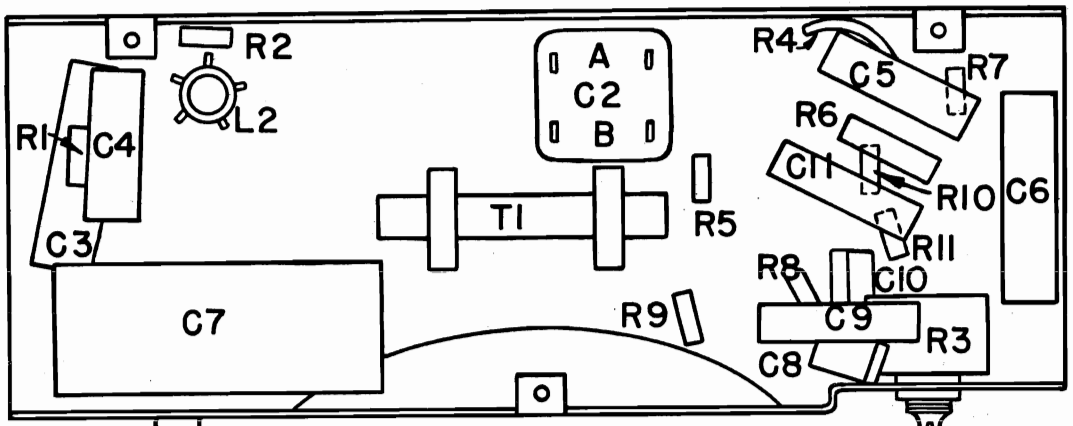

LOCATION OF PARTS UNDER CHASSIS

REF. NO.	PART NO.	DESCRIPTION
R1	C20060-334	Resistor, ¼ W., 330 K.
R2	C20060-223	Resistor, ¼ W., 22 K.
R3	C21630	Resistor, Volume Control, 2meg.
R4	A19177	Resistor, 1 W., 47 ohms
R5	C20120-121	Resistor, ¼ W., 120 ohms
R6	C20070-222	Resistor, 1 W., 2200 ohms
R7	C20060-150	Resistor, ¼ W., 15 ohms
R8	C20060-475	Resistor, ¼ W., 4.7 meg.
R9	C20060-156	Resistor, ¼ W., 15 meg.
R10	C20060-474	Resistor, ¼ W. 470 K.
R11	C20060-105	Resistor, ¼ W., 1 meg.
C1A, C1B	C22919	Condenser, Tuning
C2A, C2B	A21042	Condenser, I. F. Trans. Trimmers
C3	C20068-503	Condenser, .05 uf., 400 V.
C4	C20067-503	Condenser, .05 uf, 200 V.
C5	C20068-103	Condenser, .01 uf, 400 V.
C6	C20068-503	Condenser, .05 uf., 400 V.
C7	A22876	Condenser, 40-20, uf, 150 V., 20 uf, 25 V.
C8	C20065-101	Condenser, 100 uf, 500 V.

REF. NO.	PART NO.	DESCRIPTION
C9	C20069-202	Condenser, .002 uf, 600 V.
C10	C20065-101	Condenser, 100 uf, 500 V.
C11	C20069-202	Condenser, .002 uf, 600 V.
SPK	C22875	4" P. M. Speaker
T2	C22878	Output Transformer
T1	C22863	I. F. Transformer
L1	C22864	Antenna Coil
L2	C22865	Oscillator Coil
P	B20257-1	Line Cord & Plug Assy.
	AA23438-1	Cabinet with Grille Cloth, Ivory
	AA23438-2	Cabinet with Grille Cloth, Red
	AA23438-3	Cabinet with Grille Cloth, Yellow
	AA23438-4	Cabinet with Grille Cloth, Bronze
	AA23438-5	Cabinet with Grille Cloth, Willow Green
	AA23438-6	Cabinet with Grille Cloth, Burgundy
	C22923-1	Tuning Knob
	A22924-1	Volume Knob
	A21992	Compression Spring

©John F. Rider

Compliments of www.nucow.com

MODEL 446P,
Ch. RE-280

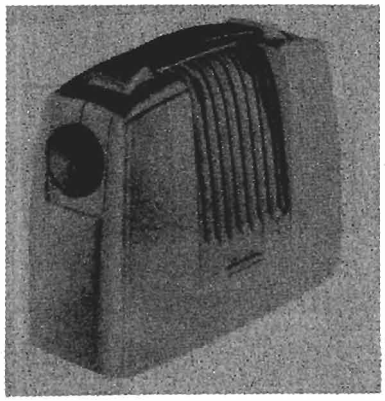

SPECIFICATIONS

FREQUENCY RANGE
- Broadcast ..... 540-1600 kc
- IF ..... 455 kc

TUBES AND FUNCTIONS
- 1R5 ..... Mixer-oscillator
- 1T4 ..... IF Amp.
- 1U5 ..... DET-AVC AF Amp.
- 3S4 ..... Output

POWER SUPPLY
- 1 67½ V. B. Battery, Everyeady Minimax, No. 467 or Equal.
- 2 1½ V. D. Size Flashlight Cells, Connected in Parallel.

POWER OUTPUT
- Undistorted ..... .06 Watts
- Maximum ..... .15 Watts
- Plate Load ..... 10,000 Ohms

LOUD SPEAKER
- Type: Permanent magnet ..... 68 Oz.
- Size: 4 Inch
- Voice: Coil Impedance ..... 3.2 Ohms

CHASSIS FEATURES
- Automatic Volume Control
- Built-in Loop

OPERATING CONTROLS
- 1 Left Knob ..... On-Off Switch and Volume
- 2 Right Knob ..... Tuning

PHYSICAL DIMENSIONS
- Length ..... 9 Inches
- Height ..... 6½ Inches
- Depth ..... 3½ Inches

PARTS LIST

REF. No.	PART NO.	DESCRIPTION
R1	C20060-104	Resistor, 100,000 ohm, ¼ watt, 20%
R2	C20060-225	Resistor, 2.2 megohm, ¼ watt, 20%
R3	C20060-106	Resistor, 10 megohm, ¼ watt, 20%
R4	C20060-475	Resistor, 4.7 megohm, ¼ watt, 20%
R5	C20060-105	Resistor, 1 megohm, ¼ watt, 20%
R6	C20060-225	Resistor, 2.2 megohm, ¼ watt, 20%
R7	C20120-391	Resistor, 390 ohm, ¼ watt, 10%
R8	C23138	Volume Control and Switch, 2 megohm
C1	A21811	Condenser, Electrolytic, 10 uf, 150 volts
C2, C11	C20067-503	Condenser, .05 uf, P.T., 200 volts
C3, C10	C20065-500	Condenser, 50 uuf, Mica, 500 volts
C4	C20069-202	Condenser, .002 uf, P.T., 600 volts
C5	C20065-101	Condenser, 100 uuf, Mica, 500 volts
C6	C20067-103	Condenser, .01 uf, P.T., 200 volts
C7	C20069-602	Condenser, .006 uf, P.T., 600 volts
C8	C20069-102	Condenser, .001 uf, P.T., 600 volts
C9 (A-B)	C22966	Condenser, Variable
L1	C23141	Antenna, Loop
L2	AC23139	Oscillator Coil Assembly
T1, T2	C21797-1	I.F. Transformer
	A21792	Spring Clip, I.F. Coil Mounting,
T3	AC23140	Output Transformer
SPK	C22972	Speaker, 4" P.M.
	A21842	"B" Battery Cable and Terminal Strip
	A23136	"A" Battery Clip (Brass)
	A19180	"A" Battery Insulating Washers, 10 for
	A23137	"A" Battery Clip Insulator, 10 for
	C23133	Volume Control Mounting Bracket
	C23134	Variable Condenser, Mounting Bracket
	C23132	Chassis Bottom Cover
	A20243-3	Socket, Miniature, Shielded
	A20243-1	Socket, Miniature, Unshielded
	C23167	Knob, Volume Control
	C23166	Knob, Tuning
	A22572	Tube, Shield (145)
	A22573	Shield Base Clip
	A23172	Carton
	*AA23759-1	Cabinet Assembly, Maroon
	*AA23759-2	Cabinet Assembly, Sandalwood

* Cabinet assembly includes grill cloth, handle, and chassis mounting brackets.

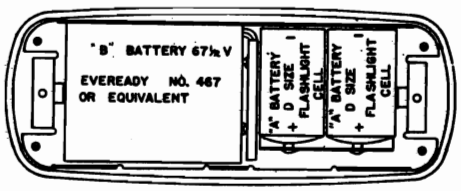

BATTERY INSTALLATION

©John F. Rider

Compliments of www.nucow.com

MODEL 446P,
Ch. RE-280

ALIGNMENT DATA

Preliminary

Output meter reading to indicate .05 watt across voice coil ____ 0.4 V.
Generator ground lead connected ____ to metal chassis.
Generator modulation ____ 30%, 400 cycles.
Position of Volume control ____ fully on.

Position of Variable	Generator Frequency	Dummy Antenna	Generator Connections	Adjust Trimmers (In order shown)	Trimmer Function
Open	455 KC	.05 MFD	Mixer Grid	A1, A2, A3, A4	I.F.
Open	1650 KC		Test Loop	A5	Osc.
1400 KC	1400 KC		Test Loop	A6	Ant.
600 KC	600 KC		Test Loop	Check Point	

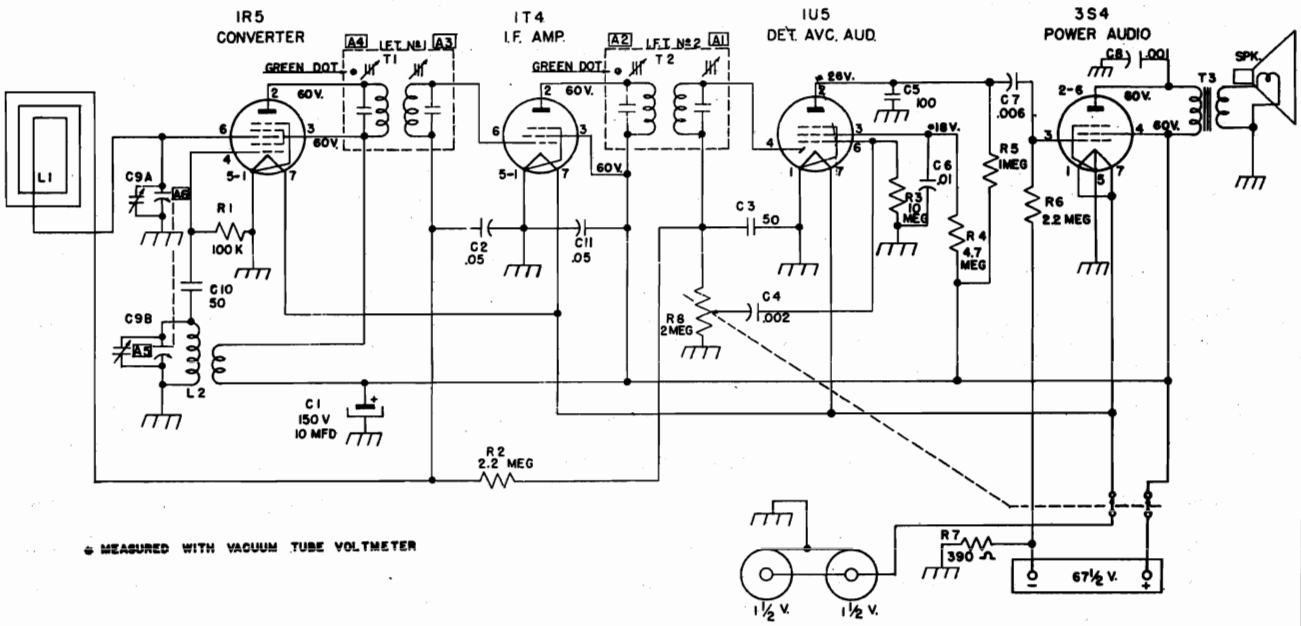

SCHEMATIC DIAGRAM

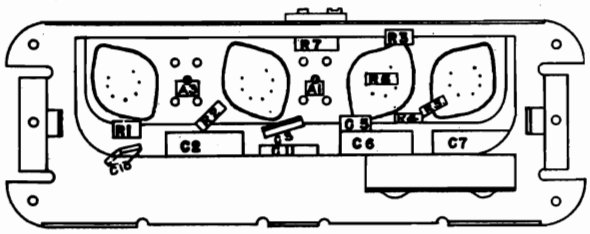

LOCATIONS OF PARTS UNDER CHASSIS

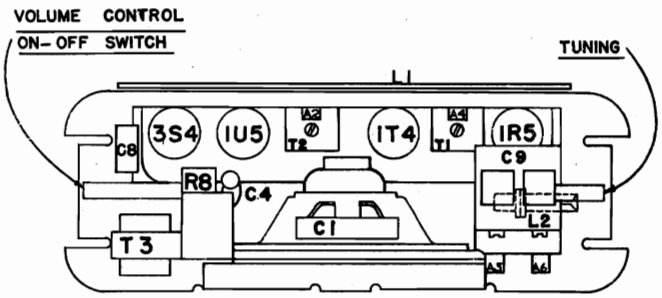

TUBE LAYOUT

©John F. Rider

Compliments of www.nucow.com

MODELS 450T,
451T, Ch. RE-281

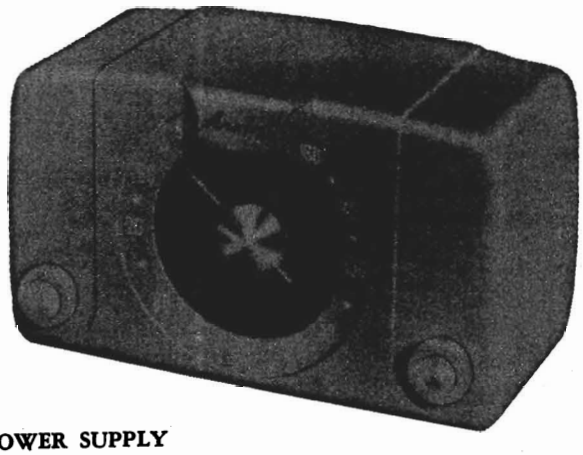

SPECIFICATIONS

FREQUENCY RANGE

Broadcast	540-1600 kc
IF	455 kc

TUBES AND FUNCTIONS

12BE6	Mixer-oscillator
12BA6	IF Amp.
12AT6	DET-AVC AF Amp.
50C5	Output
35W4	Rectifier

LOUD SPEAKER

Type: Permanent magnet
Size: 5 Inch
Voice coil impedance ..... 3.2 Ohms

CHASSIS FEATURES

Automatic Volume Control
Built-in Loop
Underwriters' Listed

OPERATING CONTROLS

1. Left knob ..... ON-OFF Sw and Volume
2. Right knob ..... Tuning

POWER SUPPLY

105-125 Volts, AC-DC, 35 Watts

POWER OUTPUT

Undistorted	1 Watt
Maximum	1.5 Watts
Plate load	2000 Ohms

PHYSICAL DIMENSIONS

Length	11 inches
Height	6⅜ inches
Depth	5½ inches

The same chassis is used in models 450T and 451T. 451T has additional cabinet trim and deluxe knobs, which are not used on Model 450T. 450T is made in Ivory and Walnut. 451T is made in the following colors: Ivory, Willow Green, Sandalwood, and Ebony.

THE ANTENNA

This receiver has a built-in loop which gives satisfactory reception in most locations. If the receiver is located some distance from a broadcasting station, or where the electrical interference is high, an outside antenna connected to the pickup lead on the loop, will improve reception.

This receiver is designed to operate without a ground connection and no attempt should be made to use one.

PRELIMINARY:

ALIGNMENT PROCEDURE

Output meter connection	Across loadspeaker voice coil
Output meter reading to indicate 500 milliwatts (standard output)	8 volts
Dummy antenna value to be used in series with generator output	See chart below
Connection of generator output lead	See chart below
Connection of generator ground lead	Floating ground
Generator modulation	30% 400 cycles
Position of volume control	Fully clockwise
Position of dial pointer with variable fully closed	Last mark at left end of dial

Position of Variable	Frequency of Generator	Dummy Antenna	Generator Output Connection	Trimmers Adjusted in Order Shown for Maximum Output	Function of Trimmer
Open	455	.05 mfd.	12BE6 Grid (Stator of C1A)	A1, A2, A3, A4,	IF
1400	1400		*Test Loop	A5, A6 on Variable Condenser	Osc. Ant.
600	600		*Test Loop	Check Point	

*Standard Hazeltine Test Loop Model 1150 or 3 turns of wire about 6" in diameter, placed about one foot from the set loop.

©John F. Rider

Compliments of www.nucow.com

MODELS 450T, 451T, Ch. RE-281

The alignment procedure should be repeated in the original order for greatest accuracy. Always keep the output from the signal generator at its lowest possible value to make the AVC action of the receiver ineffective.

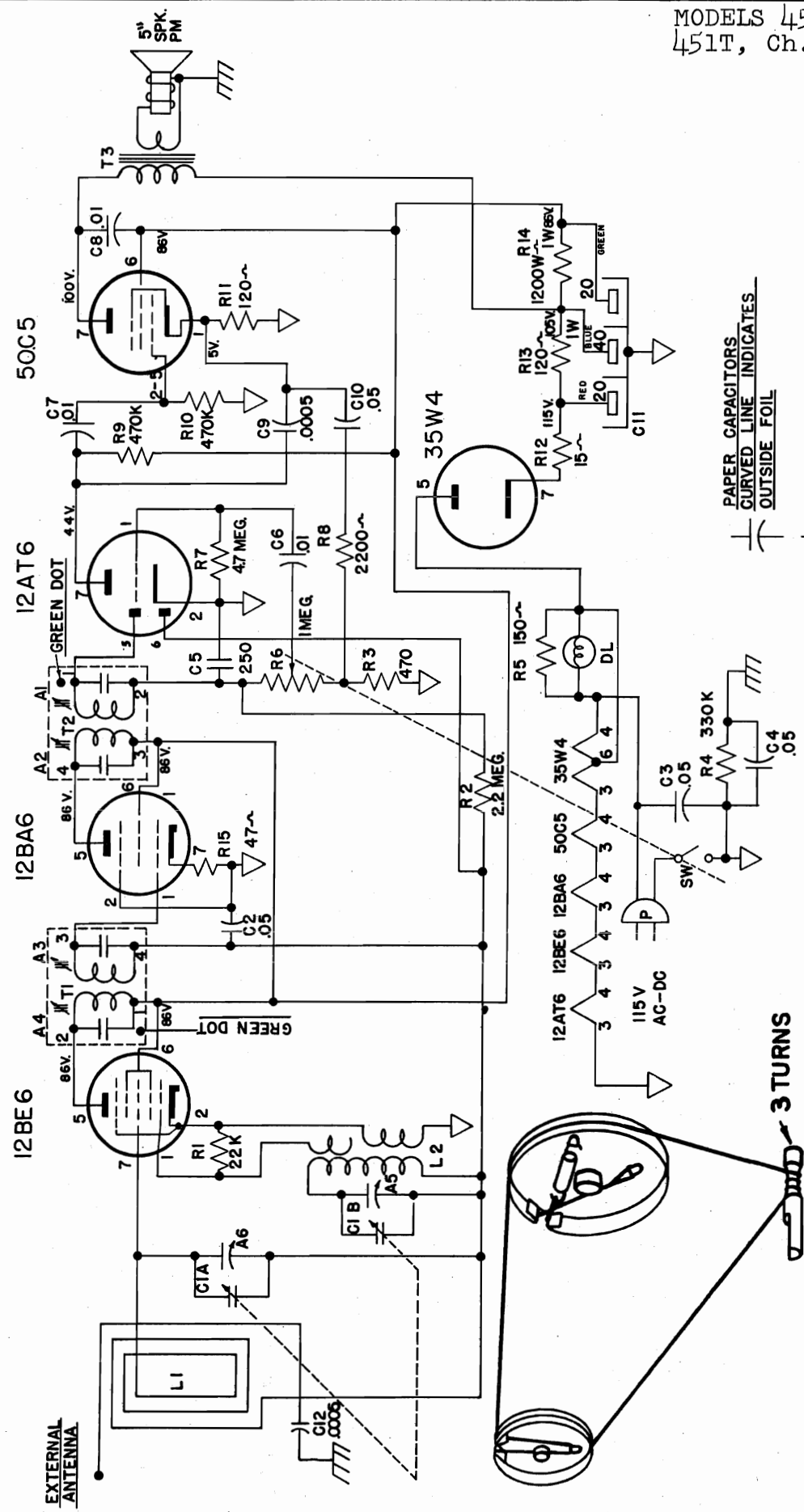

©John F. Rider

Compliments of www.nucow.com

MODELS 450T,
451T, Ch. RE-281

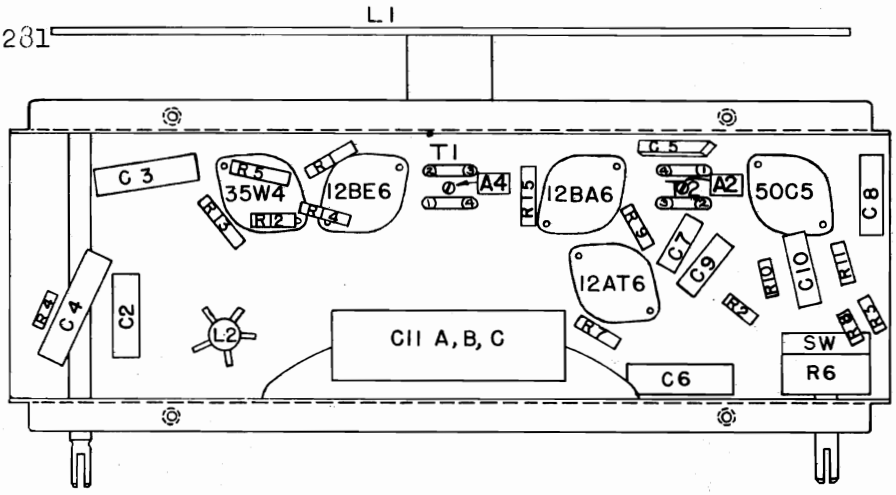

LOCATION OF PARTS UNDER CHASSIS

TUBE LAYOUT

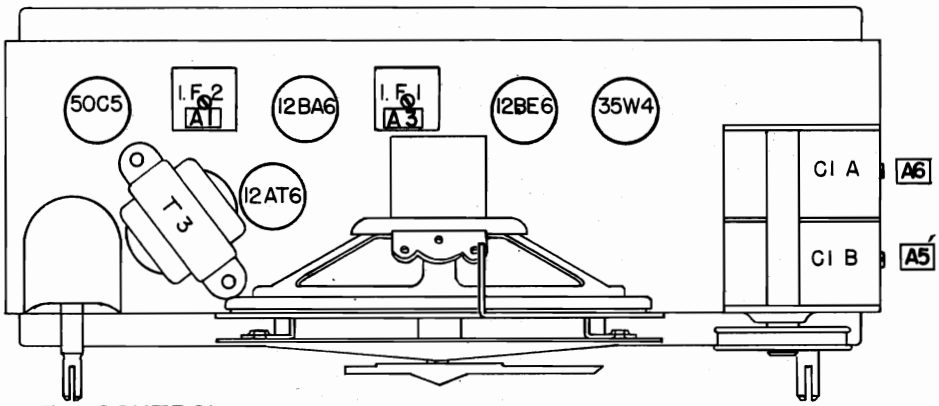

VOLUME CONTROL
& SWITCH

TUNING

LOCATION OF TUBES AND TRIMMERS

PARTS LIST — 450T-451T

REF. NO.	PART NO.	DESCRIPTION
L1	D23465	Antenna Loop and Rear Cover
	B23456	Antenna Loop Mounting Bracket
	AE23499-1	Cabinet Assy., 450T Ivory
	AE23499-2	Cabinet Assy., 450T Walnut
	AE23499-3	Cabinet Assy., 451T Deluxe Ivory
	AE23499-4	Cabinet Assy., 451T Deluxe Willow Green
	AE23499-5	Cabinet Assy., 451T Deluxe Sandalwood
	AE23499-6	Cabinet Assy., 451T Deluxe Ebony
	A23474	Carton with fillers
L2	AC22865-1	Coil, Oscillator
C1 A, B	C23469	Variable Condenser
C2, C10	C20067-503	Condenser, Paper Tubular .05 mf. 200 V
C3, C4	C20068-503	Condenser, Paper Tubular .05 mf. 400 V
C5	C20065-251	Condenser, Mica 250 mmf. 500 V
C6, C7, C8	C20068-103	Condenser, Paper Tubular .01 mf. 400 V
C9, C12	C20069-501	Condenser, Paper Tubular .0005 mf. 600 V
C11	C23470	Condenser, Electrolytic 20-40-20 150 V
	A19351	Dial Light Bulb Mazda No. 47
	A19628-3	Dial Light Socket
	A23453-1	Knob, Clear
	A23453-2	Knob, Ivory
	B20138-16	Line Cord
	C23461	Pointer
R1	C20060-223	Resistor, 22k ¼ watt 20%
R2	C20060-225	Resistor, 2.2 Meg. ¼ watt 20%
R3	C20060-471	Resistor, 470 ¼ watt 20%
R4	C20060-334	Resistor, 330K ¼ watt 20%
R5	C20060-151	Resistor, 150 ¼ watt 20%
R6	C23468	Volume Control, 1 Meg. ¼ watt 20%
R7	C20060-475	Resistor, 4.7 Meg. ¼ watt 20%
R8	C20060-222	Resistor, 2200 ¼ watt 20%
R9, R10	C20060-474	Resistor, 470K ¼ watt 20%
R11	C20120-121	Resistor, 120 ¼ watt 10%
R12	C20060-150	Resistor, 15 ¼ watt 20%
R13	C20070-121	Resistor, 120 1 watt 10%
R14	C20070-122	Resistor, 1200 1 watt 10%
R15	C20060-470	Resistor, 47 ¼ watt 20%
	A20243-1	Socket, Wafer, Plain
	A20243-3	Socket, Wafer, Center Pin Shielded
SPK	C23467	Speaker, 5" PM
	C23462-1	Speaker, Grill
	A23982	Speaker Brkt & Pointer Shaft
T1, T2	C21797-16	Transformer, I. F.
	A21792	Transformer, I. F. Spring Clips 5 for
T3	AC23464-1	Transformer, Output
	A23475	Tuning Shaft
	A19361	Tuning Shaft hair pin Clip

© John F. Rider

Compliments of www.nucow.com

MODELS 460T, 461T, Ch. RE-284

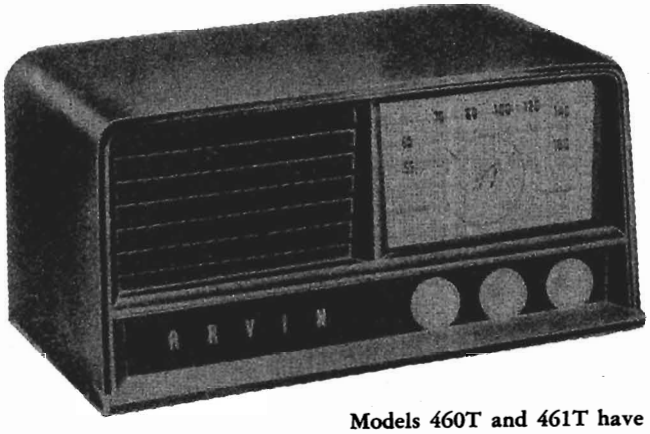

Colors are as follows:

460T — Ivory, Willow Green, and Sandalwood.

461T — Mahogany.

POWER OUTPUT

Undistorted	.8 Watts
Maximum	1.5 Watts
Plate load	2000 Ohms

Models 460T and 461T have the same Chassis, they differ only in cabinet trim and knobs.

SPECIFICATIONS

FREQUENCY RANGE

Broadcast	540-1600 kc
IF	455 kc

TUBES AND FUNCTIONS

12SK7GT	RF Amp.
12SA7GT	Mixer-oscillator
12SK7GT	IF Amp.
12SQ7GT	DET-AVC AF Amp.
35L6GT	Output
35Z5GT	Rectifier

LOUD SPEAKER

Type: Permanent magnet, 1.47 oz. Alnico 5

Size: 5 Inch

Voice coil impedance ..... 3.2 Ohms

CHASSIS FEATURES

Automatic Volume Control

Built-in Loop

Underwriters' Listed

Tuned RF Stage

OPERATING CONTROLS

1. Left knob ..... ON-OFF Sw and Volume
2. Right knob ..... Tuning
3. Center knob ..... Tone

PHYSICAL DIMENSIONS

Length	13⅞ inches
Height	6⅝ inches
Depth	7⅝ inches

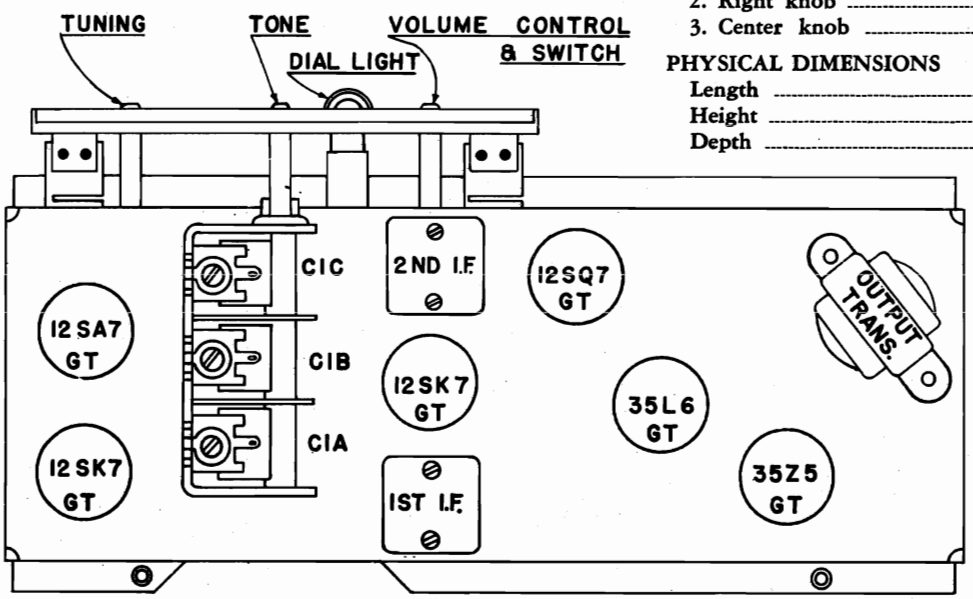

TUBE LAYOUT

ALIGNMENT PROCEDURE

PRELIMINARY:

Output meter connection	Across loudspeaker voice coil
Output meter reading to indicate .5 W (standard output)	1.26 volts
Connection of generator ground lead	Floating ground
Generator modulation	30% 400 cycles
Position of volume control	Fully clockwise
Position of dial pointer with variable fully closed	Horizontally to left

©John F. Rider

Compliments of www.nucow.com

MODELS 460T, 461T, Ch. RE-284

1. Connect signal generator lead through a .05 uf. condenser to converter grid. Open tuning condenser. Set signal generator to 455 Kc. Tune I. F. Trimmers A1, A2, A3, and A4 for maximum output.

2. Close tuning condenser and set pointer horizontally to left. Open tuning condenser. Connect signal generator to test loop or to blue lead on set loop. Set signal generator to 1650 Kc. Tune A5 trimmer on oscillator section of tuning condenser for maximum output.

3. Set signal generator to 1400 Kc. Adjust tuning shaft until maximum output is obtained. Tune R. F. trimmer A6 and antenna trimmer A7 on tuning condenser for greatest output. Reset tuning shaft until output is again maximum. Retune R. F. and antenna trimmers. Repeat this cycle of operations at 1400 Kc. until no further increase of output can be obtained. Keep generator output at a low value to prevent detuning by A. V. C. action.

4. Set signal generator to 600 Kc. Adjust tuning shaft for maximum output. Adjust tuning condenser plates for maximum output if necessary.

Approximate sensitivities with 117 V. AC line voltage and .5 W output across voice coil, should be: Mixer grid, 455 Kc — 200 uv; Antenna lead 600 Kc. — 250 uv., 1000 Kc — 200 uv., 1400 Kc. — 200 uv.

VOLTAGE READINGS TAKEN WITH 117V. A C LINE VOLTAGE
* THESE READINGS TAKEN WITH VACUUM TUBE VOLTMETER

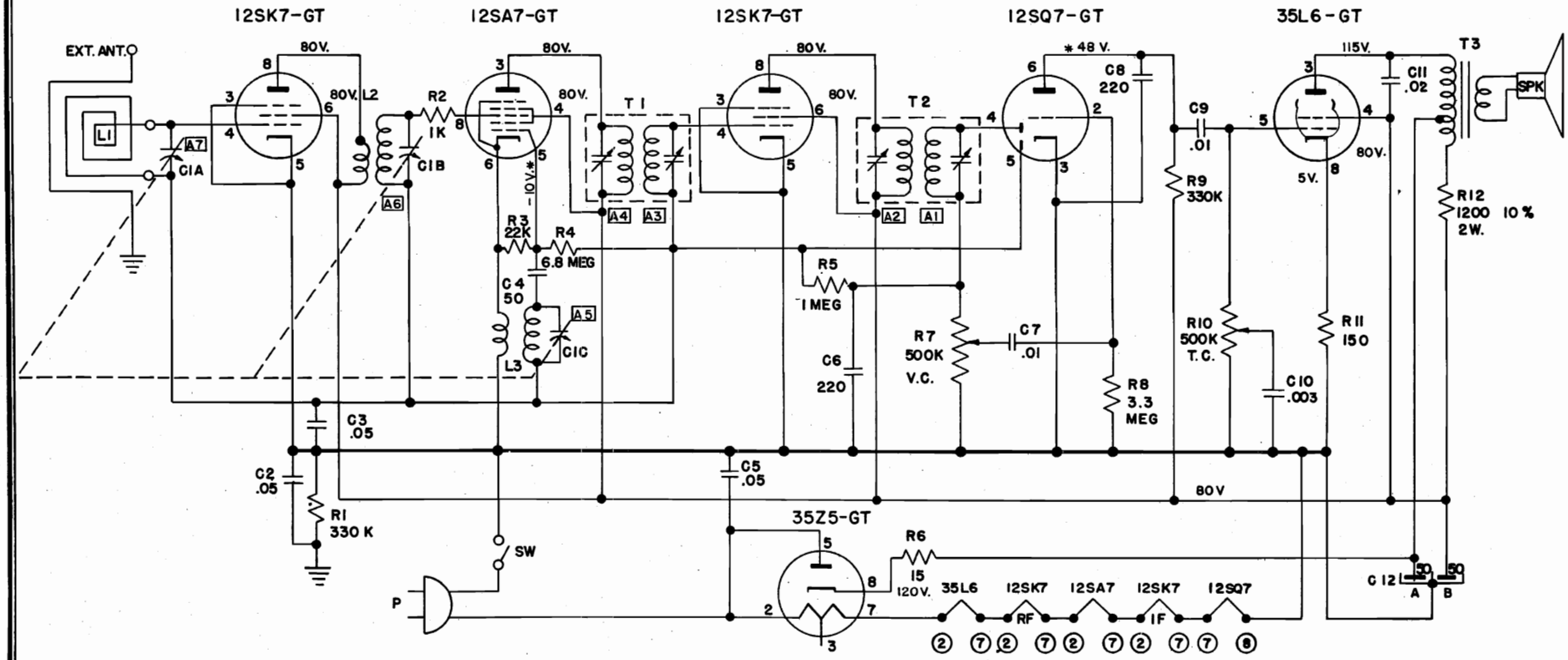

©John F. Rider

Compliments of www.nucow.com

MODELS 460T,
461T, Ch. RE-284

PARTS LIST — 460T-461T

Schematic Location	Part No.	Description
L1	D23159	Antenna Loop
	B22953	Antenna Loop Mtg. Brkt.
	A23830-1	Cabinet (461) Mahogany with carton
	A23829-2	Cabinet (460) Ivory with decorative rail & Carton
	A23829-3	Cabinet (460) Willow Green with decorative Rail & Carton
	A23829-4	Cabinet (460) Sandalwood with decorative Rail & Carton
	C23299	Cabinet - Rear Cover
	C23300	Cabinet decorative Rail with Palnuts & washers.
	A23237	Carton
L2	AC23163	Coil, R. F.
L3	C23751	Coil, Oscillator
C1A,B,C	C23743	Condenser, Variable
C2, C5	C20068-503	Condenser, P. T. .05 uf., 400 V
C3	C20067-503	Condenser, P. T. .05 uf., 200 V
C4	C20065-500	Condenser, Mica 50 uuf., 500 V
C6, C8	C20203-221	Condenser, Ceramic, 220 uuf., 350 V
C7, C9	C20068-103	Condenser, P. T. .01 uf., 400 V
C10	C20069-302	Condenser, P. T. .003 uf., 600 V
C11	C20068-203	Condenser, P. T. .02 uf., 400 V
C12 A, B	A22111	Condenser, Electrolytic 50-50 uf., at 150 V
	A19133	Dial Cord Spring 10 for
	D23235	Dial Crystal
	A19124	Dial Crystal Snap Fasteners 10 for
	A19351	Dial, Lamp Bulb Mazda No. 47
	A22849-1	Dial, Lamp Socket
	AC23302-1	Dial Plate Assy. (Brown)
	AC23302-2	Dial Plate Assy. (Ivory)
	AC23302-3	Dial Plate Assy. (Wil. Green)
	AC23302-4	Dial Plate Assy. (San'wood)
	C23229-1	Knob — on-off Volume (460)
	C23229-3	Knob — Tuning (460)
	C23229-4	Knob — Tone (460)
	C23229-5	Knob — on-off volume (461)
	C23229-7	Knob — Tuning (461)
	C23229-8	Knob — Tone (461)
	B20138-15	Line Cord and Plug
	D23242	Pointer
	A20040-17	Pointer felt washer 10 for
R1, R9	C20060-334	Resistor, 330,000 ohm ¼ W
R2	C20060-102	Resistor, 1000 ohm ¼ W
R3	C20060-223	Resistor, 22,000 ohm ¼ W
R4	C20060-685	Resistor, 6.8 Megohm ¼ W
R5	C20060-105	Resistor, 1 megohm ¼ W
R6	C20060-150	Resistor, ¼ W
R7	C22963	Resistor, Volume control & switch 500,000 ohm
R8	C20060-335	Resistor, 3.3 megohm ¼ W
R10	C23156	Resistor, Tone control 500,000 ohm
R11, R13	C20060-151	Resistor, 150 ¼ W
R12	C20223-122	Resistor, 1200 2 W ± 10%
SPK	C22760-1	Speaker, 5" P. M.
	A19138-8	Speaker, spacer eyelet 10 for
T1	AC23161	Transformer, 1st I. F.
T2	AC23162	Transformer, 2nd I. F.
T3	AC23164	Transformer, Output
	A19233-1	Tube socket, center pin shielded
	A18254-1	Tube Socket Plain
	A22957-1	Tuning shaft
	A19361	Tuning shaft hair pin clip

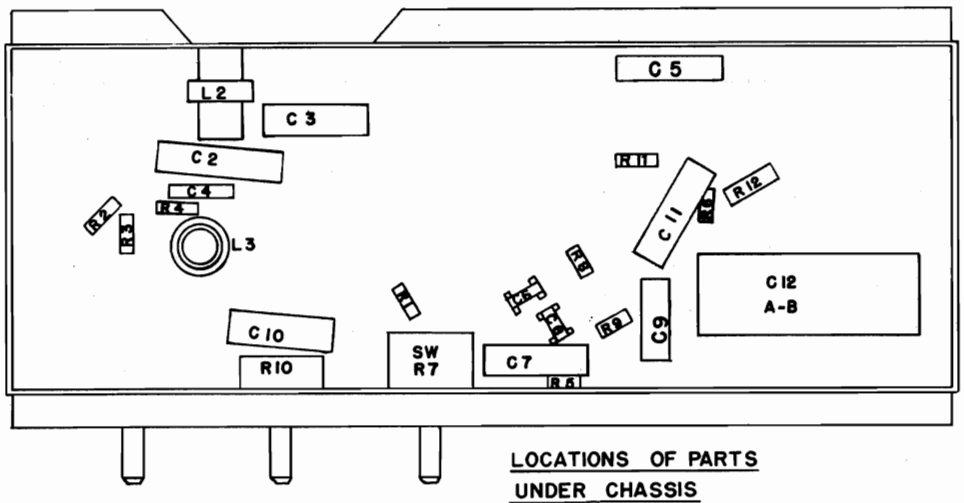

LOCATIONS OF PARTS
UNDER CHASSIS

©John F. Rider

Compliments of www.nucow.com

MODELS 462-CB, 462-CM, Ch. RE-287-1

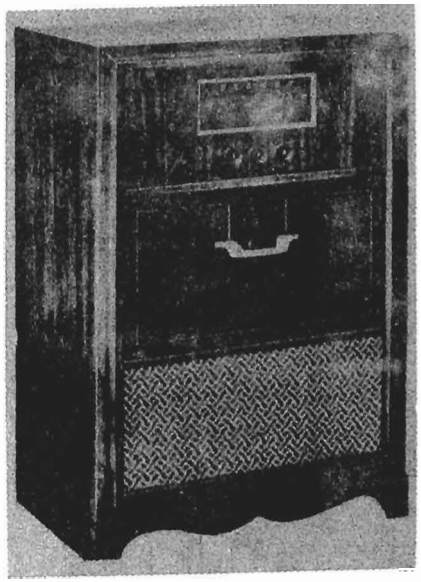

SPECIFICATIONS

FREQUENCY RANGE

Broadcast	540-1600 kc
IF	455 kc

TUBES AND FUNCTIONS

12SK7GT	RF Amp.
12SA7GT	Mixer-oscillator
12SK7GT	IF Amp.
12SQ7GT	DET-AVC AF Amp.
35L6GT	Output
35Z5GT	Rectifier

POWER OUTPUT

Undistorted	.8 Watts
Maximum	1.5 Watts
Plate load	2000 Ohms

LOUD SPEAKER

Type: Permanent magnet, 1.47 oz. Alnico 5
Size: 8 Inch

Voice coil impedance	3.2 Ohms

CHASSIS FEATURES

Automatic Volume Control
Built-in Loop
Underwriters' Listed
Tuned RF Stage

OPERATING CONTROLS

1. Left knob	ON-OFF Sw and Volume
2. Right knob	Tuning
3. Center knob	Tone

PHYSICAL DIMENSIONS

Length	22 inches
Height	34 inches
Depth	16 inches

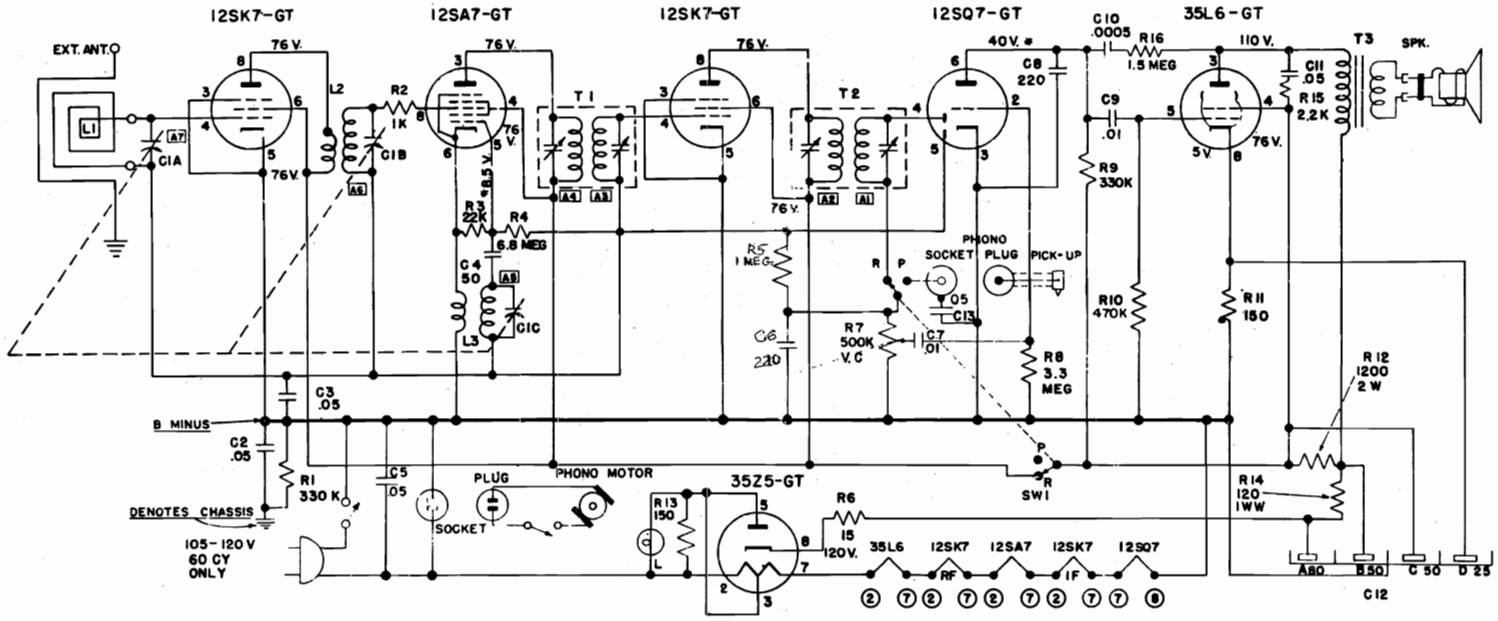

A 24238

©John F. Rider

Compliments of www.nucow.com

MODELS 462-CB, 462-CM, Ch. RE-287-1

ALIGNMENT PROCEDURE

PRELIMINARY:

Output meter connection	Across loudspeaker voice coil
Output meter reading to indicate .5 W (standard output)	1.26 volts
Connection of generator ground lead	Floating ground
Generator modulation	30% 400 cycles
Position of volume control	Fully clockwise
Position of dial pointer with variable fully closed	Horizontally to left

1. Connect signal generator lead through a .05 uf. condenser to converter grid. Open tuning condenser. Set signal generator to 455 Kc. Tune I. F. Trimmers A1, A2, A3, and A4 for maximum output.
2. Close tuning condenser and set pointer horizontally to left. Open tuning condenser. Connect signal generator to test loop or to blue lead on set loop. Set signal generator to 1650 Kc. Tune A5 trimmer on oscillator section of tuning condenser for maximum output.
3. Set signal generator to 1400 Kc. Adjust tuning shaft until maximum output is obtained. Tune R. F. trimmer A6 and antenna trimmer A7 on tuning condenser for greatest output. Reset tuning shaft until output is again maximum. Retune R. F. and antenna trimmers. Repeat this cycle of operations at 1400 Kc. until no further increase of output can be obtained. Keep generator output at a low value to prevent detuning by A. V. C. action.
4. Set signal generator to 600 Kc. Adjust tuning shaft for maximum output. Adjust tuning condenser plates for maximum output if necessary.

Approximate sensitivities with 117 V. AC line voltage and .5 W output across voice coil, should be: Mixer grid, 455 Kc — 200 uv; Antenna lead 600 Kc. — 250 uv., 1000 Kc — 200 uv., 1400 Kc. — 200 uv.

TUBE LAYOUT

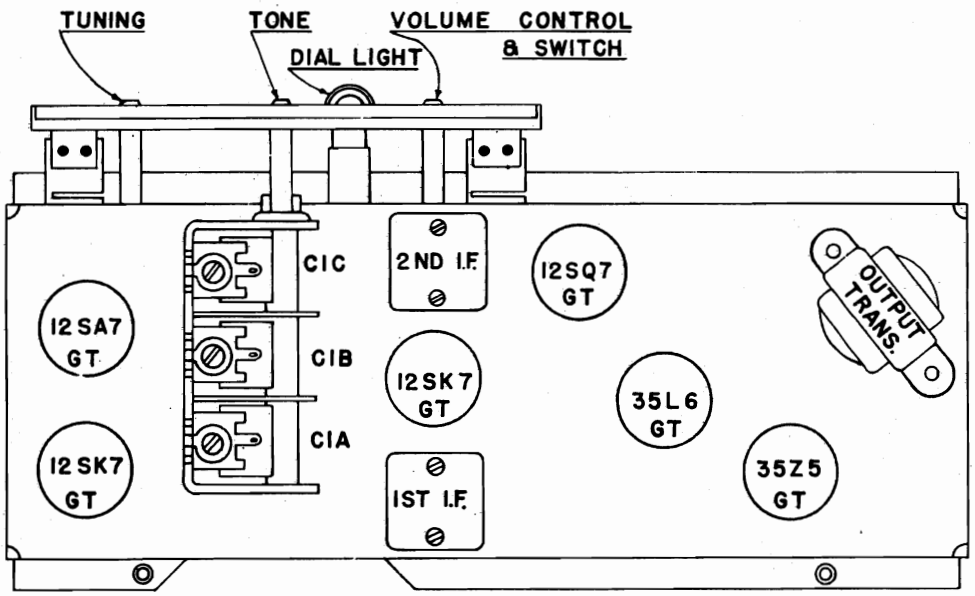

©John F. Rider

Compliments of www.nucow.com

MODELS 462-CB, 462-CM, Ch. RE-287-1

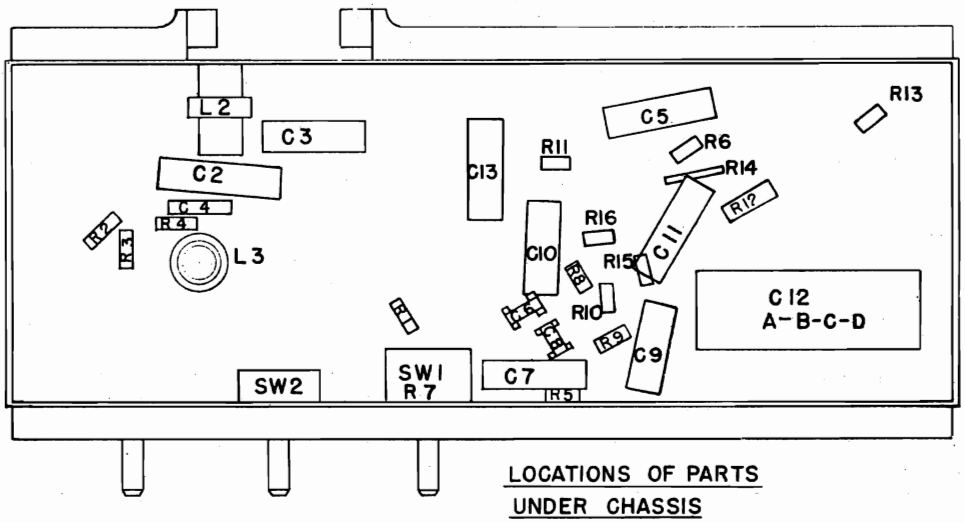

LOCATIONS OF PARTS UNDER CHASSIS

PARTS LIST FOR NO. 462-CM AND NO. 462-CB, RE-287-1

Schematic Location	Part No.	Description
L1	D23159	Antenna Loop Assy.
	B22953	Bracket, Antenna Loop Mtg.
	C23427	Bracket, Dial (2 Used)
	R23689	Cabinet, Mahogany (With Carton)
	R23689-1	Cabinet, Blonde (With Carton)
C1A, B, C	C23743	Capacitor, Variable, 3-Gang
C4	C20065-500	Capacitor, 50 uuf, 500 V, Mica
C6, C8	C20203-221	Capacitor, 220 uuf, 350 V, Ceramic
C10	C20069-501	Capacitor, .0005 MFD,600 V, Paper
C7, C9	C20068-103	Capacitor, .01 MFD, 400 V, Paper
C3	C20067-503	Capacitor, .05 MFD, 200 V, Paper
C2, C5, C11, C13	C20068-503	Capacitor, .05 MFD, 400 V, Paper
C12A, B, C, D	C23930	Capacitor, 80-50-50/150, 25/25, Electrolytic
	E23593	Record Changer Assy. (See V-M Model 950)
L3	AC23751-1	Coil, Oscillator
L2	AC23163-1	Coil, R.F.
R7	C22963	Control, Vol. & Switch, 500K Ohms
	C23707	Cover, Cabinet Rear
	C23578	Cover, Record Changer Bottom
	A23594	Dial Pointer (Mahogany)
	A23594-1	Dial Pointer (Blonde)
	D23695	Dial Scale (Mahogany)
	D23695-1	Dial Scale (Blonde)
	C23402	Escutcheon & Crystal
	D23706-2	Knob, Radio-Phono (Mahogany)
	D23706-10	Knob, Radio-Phono (Blonde)
	D23706-3	Knob, Tuning (Mahogany)
	D23706-11	Knob, Tuning (Blonde)
	D23706-1	Knob, Volume, On-Off (Mahogany)
	D23706-9	Knob, Volume, On-Off (Blonde)
	A19351	Lamp, Dial, Mazda No. 47
	B20138-15	Line Cord & Plug
R6	C20060-150	Resistor, 15 Ohms, 20%, ½W
R14	A23933	Resistor, 120 Ohms 10%, 1W
R11, R13	C20060-151	Resistor, 150 Ohms 20%, ½W
R2	C20060-102	Resistor, 1000 Ohms 20%, ½W
R12	C20223-122	Resistor, 1200 Ohms 10%, 2W
R16	C20060-222	Resistor, 2200 Ohms 20%, ½W
R3	C20060-223	Resistor, 22K Ohms 20%, ½W
R1, R9	C20060-334	Resistor, 330K Ohms 20%, ½W
R10	C20060-474	Resistor, 470K Ohms 20%, ½W
R5	C20060-105	Resistor, 1 Megohm 20%, ½W
R16	C20060-155	Resistor, 1.5 Megohms 20%, ½W
R8	C20060-335	Resistor, 3.3 Megohms 20%, ½W
R4	C20060-685	Resistor, 6.8 Megohms 20%, ½W
	A19551	Socket, A.C., Phono. Motor
	A23537-2	Socket, Dial Lamp
	A19552	Socket, Phono. Pick-up
	A19579	Socket, Speaker
	AD23693-1	Speaker Assy. 8" With Leads & Plug
	A19133	Spring, Dial Cord
	C23486	Switch, Band
T1	AC23161-1	Ist I.F. Transformer
T2	AC23162-1	2nd I.F. Transformer
T3	AC23931-1	Transformer, Output
	A22957-1	Tuning Shaft
	A19361	Tuning Shaft, Hair Pin Clip
	A22763	Weight, Cabinet

©John F. Rider

Compliments of www.nucow.com

MODELS 480TFM, 481TFM,
Ch. RE-277, RE-277-1

SPECIFICATIONS

FREQUENCY RANGE

Broadcast (AM)	540-1600 kc
IF	455 kc
FM	88-108 mc
IF	10.7 mc

TUBES AND FUNCTIONS

6BA6	FM R. F. Amp.
12AT7	FM Converter
6BE6	AM Converter
6BA6	AM-FM-IF Amp.
6BA6	FM, IF Amp.
6T8	FM-AM DET, IST Audio AVC
6V6GT	Output
6X4	Rectifier

POWER OUTPUT

Undistorted	1.5 Watts
Maximum	2.5 Watts
Plate load	2000 Ohms

LOUD SPEAKER

Type: Permanent magnet, 1.47 oz. Alnico 5
Size: 5 Inch
Voice coil impedance ..... 3.2 Ohms

CHASSIS FEATURES

Automatic Volume Control
Built-in Loop
Underwriters' Listed

OPERATING CONTROLS

1. Left knob	ON-OFF Sw and Volume
2. Right knob	Tuning
3. Center knob	Band Sw

PHYSICAL DIMENSIONS

Length	13⅞ inches
Height	6⅝ inches
Depth	7⅝ inches

Models 480TFM and 481TFM have the same Chassis, they differ only in Cabinet trim and knobs.

Colors are as follows:
480TFM — Ivory, Willow Green, Sandalwood and Rosewood.
481TFM — Mahogany.

Chassis RE-277-1 has a Bass boost and Hum Reduction Circuit which is not incorporated in Chassis RE-277. See note on Schematic Diagram.

THE ANTENNA

AM - This receiver has a built-in loop which gives satisfactory reception in most locations. If the receiver is located some distance from a broadcasting station, or where the electrical interference is high, an outside antenna connected to the terminal marked AM on the antenna terminal strip will improve reception.

FM - An 8' length of wire is connected to the FM antenna terminal for an indoor FM antenna. Terminals are provided on the antenna terminal strip to connect an outside FM antenna, they are labeled FM & G.

TECHNICAL INFORMATION

AM Tuning range — 540 Kc. to 1600 Kc. Immediate Frequency — 455 Kc. I. F. and R. F. measurements made at 500 milliwatts output — approximately 1.27 volts on a receiver type voltmeter connected across speaker voice coil. Approximate input for 500 MW output: I. F. 300 uv; R. F. with standard loop: at 600 Kc. 1200 uv/m; at 1000 Kc. 900 uv/m; at 1400 Kc. 800 uv/m.

FM Tuning range — 88 megacycles to 108 megacycles. Intermediate frequency 10.7 megacycles .I.F. and R.F. measurements made at 500 milliwatts output — approximately 1.27 volts on a rectifier type voltmeter connected across speaker voice coil. Approximate input for 500 MW output: I. F. 300 uv; R. F. "Absolute Measurements": 91 megacycles 100 uv; 105 megacycles, 100 uv.

ALIGNMENT PROCEDURE

Output meter connection	Across speaker voice coil
Output meter reading to indicate 500 MW	1.27 volts
Generator Modulation	30%, 400 cycles
Position of volume control	Fully clockwise
Set dial pointer	Horizontal, variable condenser closed
Set band switch	To left for AM alignment, right for FM alignment

©John F. Rider

Compliments of www.nucow.com

MODELS 480TFM, 481TFM,
Ch. RE-277, RE-277-1

AM ALIGNMENT

Position of Variable	Generator Frequency	Dummy Ant.	Generator Connection (high)	Generator Connection Ground Lead	Adjust Trimmers In Order Shown For Max. Output	Trimmer Function
Open	455 Kc	.05 mfd.	Mixer Grid	Chassis	A1, A2, A3, A4,	I. F.
Open	1650 Kc		*Test Loop	Test Loop	A5	Oscillator
1400 Kc	1400 Kc		*Test Loop	Test Loop	A6	Antenna
**600 Kc	600 Kc		*Test Loop	Test Loop	Check Point	Antenna

* Connect generator lead to Standard Hazeltine Test Loop, Model 1150, placed two feet from the set loop, or three turns of wire about six inches in diameter, placed about one foot from the set loop. Or the generator can be connected with the high side lead to the AM antenna screw terminal and the ground lead to the chassis.
**With a generator signal of 600 Kc, tune the set to the point where maximum output is obtained, which shoul be approximately 600 Kc on the dial. Adjust antenna section plates of variable for maximum output. The alignment procedure should be repeated in the original order for greatest accuracy.
Always keep the output from the signal generator at its lowest possible value to make the A. V. C. action of the receiver ineffective.

FM ALIGNMENT

1. Turn band switch to FM, (right).

2. Connect (FM) I. F. generator to the second 6BA6 I. F. amp. grid, (lug No. 1) through a .01 uf mica dummy. Connect oscilloscope across volume control. With the I. F. generator tuned to 10.7 mc with 150 Kc deviation, and the same audio voltage used as horizontal sweep on the scope that is used to modulate the generator, adjust the ratio detector transformer slugs A7-A8 for the characteristic "S" curve (See Fig. 1), with maximum vertical height on the scope. After this adjustment the top slug of the ratio detector should not be moved during the rest of the alignment.

3. Connect I. F. generator to mixer grid through .01 mica dummy. Using 23 Kc deviation at 10.7 Mc, adjust for maximum output. Maximum output may be indicated by maximum vertical height on the scope or maixmum voltage on a standard output meter across the voice coil of the receiver. After the two I. F. transformers have been aligned the bottom slug A8 of the ratio detector should also be peaked.

   The characteristic "S" curve of the complete I. F. channel should be checked by applying a 10.7 Mc signal with 150 Kc deviation to the mixer grid and observing the "S" curve on the scope. It should not be very much different from that observed in step 2.

4. Connect R. F. (FM) generator (88 to 108Mc) to the antenna terminals through the standard 300 ohm dummy (150 ohm in each side of generator leads).

   Use R. F. generator with 23 Kc deviation. With the variable condenser completely open and Signal Generator tuned to 108.5 Mc adjust oscillator trimmer A12 (small ceramic trimmer) for maximum reading on output meter.

   Then tune receiver to low end of band (variable completely closed) and Signal Generator to 87.5 Mc. If the receiver does not tune to this frequency the FM oscillator coil L4 will either have to be squeezed together or lengthened to cover the band, (squeezing lowers and lengthening raises the frequency). Any change in the coil will have to be completed by the trimmer at the high end of the band.

5. With the same Signal Generator connections as per paragraph 4 tune Signal Generator and set to 105 Mc. Tune R. F. trimmer A13 for maximum output at the same time rock variable back and forth through the frequency. (Rocking is necessary because slight oscillator pulling causes erroneous maximum readings).

   Tune Signal Generator and set to 90 Mc. Adjust R. F. coil L3 length for maximum output by squeezing or lengthening. Any change in the coil will have to be compensated at 105 Mc by the R. F. trimmer A13.

6. After Steps 4 and 5 are finished check calibration and band coverage. Steps 4 and 5 may have to be repeated if set is off calibration. Band coverage should be 87.5 Mc to 108.5 Mc. Sensitivity should be approximately 100 uv at 105 Mc, 98 Mc and 90 Mc.

FIG. 1.

©John F. Rider

Compliments of www.nucow.com

MODELS 480TFM, 481TFM,
Ch. RE-277, RE-277-1

PARTS LIST FOR 480-481 TFM

Schematic Location	Part No.	Description
L3	D22586	Antenna Loop Assembly
	B22953	Antenna Loop Mounting Bracket
	*A22960	Antenna Terminal Strip
	AA23830-1	Cabinet (481) Mahogany with carton
	AA23829-2	Cabinet (480) Ivory with decorative rail & Carton
	AA23829-3	Cabinet (480) Willow Green with decorative rail and carton
	AA23829-4	Cabinet (480) Sandalwood with decorative rail and carton
	AA23829-1	Cabinet (480) Rosewood with decorative rail and carton
	C23299	Cabinet rear cover
	C23300	Cabinet Decorative Rail with Palnut and Washer
	A23237	Carton
L1	AA22648-1	Choke High Frequency 1.5 uh
L2	AA21445-1	Choke High Frequency 7.5 uh.
L7	AA22597-1	Choke High Frequency 3 uh.
L8	A21673	Choke, RF, Iron Core, 14 uh.
L4	A22593	Coil, R. F. FM
L5	A22594	Coil, Oscillator, FM
L6	AC22587-1	Coil, Oscillator, AM
C1, C2, C3, C4	R22962	Condenser, Variable, 4 Gang AM-FM
C4A	A22724	Condenser, Oscillator Temperature Cor. 5-25 uuf.
C5, C14	C20203-470	Condenser, Ceramic 47 uuf., 350 V
C6, C18, C19, C21, C23, C25	A21674	Condenser, Disc. 5000 uuf., 350 V
C7, C20, C24	A22295	Condenser, Disc Ceramic, .01 uf., 350 V
C8, C26, C30, C31, C20	C20203-101	Condenser, Ceramic 100 uuf., 350 V
C9, C12, C13, C16, C17	C20203-102	Condenser, Ceramic .001 uf., 350 V
C10	A20238-3	Condenser, Ceramic 1.5 uuf., 350 V Gimmick
C11	C20205-3	Condenser, Ceramic 50 uuf., 500 V
C15, C34	C20068-103	Condenser, P. T. .01 uf., 400 V
C22	C20203-150	Condenser, Ceramic 15 uuf., 350 V
C27	C20069-302	Condenser, P. T. .003 uf., 600 V
C29	A22659	Condenser, Electrolytic, 4 uf., 25 V
C32	C20203-221	Condenser, Ceramic, 220 uuf., 350 V
C35 A,B,C	A22806	Condenser, Electrolytic, 20-20-40 at 250 V
C36, C38	C20068-203	Condenser, P. T. .02 uf., 400 V
*C38	C20069-501	Condenser, P. T. .0005 uf., 600 V
C37	A22602	Condenser, Electrolytic 10 uf., 25 V
C39	C20249-103	Condenser, Phenolic, .01 uf., 400 V
C40	C20067-503	Condenser, P. T. .05, 200 V
	A19133	Dial, Cord Spring 10 for
	E23241-1	Dial Crystal
	A19124	Dial, Crystal Snap Fasteners 10 for
	A19351	Dial, Lamp bulb Mazda No. 47
	A23298	Dial, Lamp bracket 10 for
	A22849-1	Dial, Lamp Socket
	AC23302-1	Dial Plate Assembly (Brown)
	AC23302-2	Dial Plate Assembly (Ivory)
	AC23302-3	Dial Plate Assembly (Willow Green)
	AC23302-4	Dial Plate Assembly (Sandalwood)
	C23229-1	Knob, On-Off Volume (480)
	C23229-2	Knob, Band Switch (480)
	C23229-2	Knob, Tuning (480)
	C23229-5	Knob, On-Off Volume
	C23229-6	Knob, Band Switch
	C23229-7	Knob, Tuning
	B20138-14	Line Cord and Plug
	D23242	Pointer
	A20040-17	Pointer felt washer 10 for
PS-1	AA22345-1	Parasitic Suppressor
PS-2	AA22334-1	Parasitic Suppressor
R1, R11 R15	C20060-680	Resistor, 68 ohm ¼ W 20%
R2	C20070-273	Resistor, 27K ohm 1 W 10%
R3	C20060-470	Resistor, 47 ohm ¼ W 20%
R4, R6	C20060-223	Resistor, 22K ohm ¼ W 20%
R5	C20060-222	Resistor, 2.2K ohm ¼ W 20%
R7, R8 R13, R17 R30	C20060-102	Resistor, 1K ohm ¼ W 20%
R9	C20070-822	Resistor, 8.2K ohm 1 W 10%
R10, R20	C20060-105	Resistor, 1 megohm ¼ W 20%
R12	C20070-103	Resistor, 10K ohm 1 W 10%
R14, R22	C20060-104	Resistor, 100K ohm ¼W 20%
R16	C20070-332	Resistor, 3.3K ohm 1 W 10%
R18	C20060-181	Resistor, 180 ohm ¼ W 20%
R19	C20120-393	Resistor, 39K ohm ¼ W 20%
R21	C20060-224	Resistor, 220K ohm ¼ W 20%
R23	C22381-153	Resistor, 15K ohm ¼ W 10%
R24, SW-2	B22963	Resistor, Volume Control & Switch 500K ohm
R25	C20060-106	Resistor, 10 megohm ¼ W 20%
R26	C20060-474	Resistor, 330K ohm ¼ W 20%
R27 A, B	A22624	Resistor, 2 x 500 ohm 5 Watts
R28	C20060-474	Resistor, 470K ohm ¼ W 20%
R29	C20070-271	Resistor, 270 ohm 1 W 10%
R30	C20060-102	Resistor, 1K ohm ¼ W 20%
*R31	C20060-154	Resistor, 150K ohm ¼ W 20%
*R32	A23933	Resistor, 120 ohm 1 W 10%
SPK	C22760	Speaker 5" PM
Sw-1	C22961	Switch, Band
T1	C22590	Transformer, I. F. 1st F.M. 10.7 Mc
T2, T4	C22352	Transformer, I. F. AM 455 Kc
T3	AC22967-1	Transformer, I. F. 2nd F. M. 10.7 Mc
T5	AD22592-1	Transformer, Ratio Detector
T6	AC22995-1	Transformer output
T7	D22959	Transformer Power
	A20243-1	Tube socket Min Wafer 1" 7 prong plain
	A20243-2	Tube socket Min Wafer 1" 7 prong center shield
	A20274	Tube socket min. wafer 1⅛" 9 prong, center shield
	A21677	Tube socket min. moulded low loss 9 prong center shield
	A18254-1	Tube socket wafer plain
	A22957	Tuning Shaft
	A19361	Tuning shaft hair pin clip

Used on RE-277-1 only. See Note on Schematic Diagram.

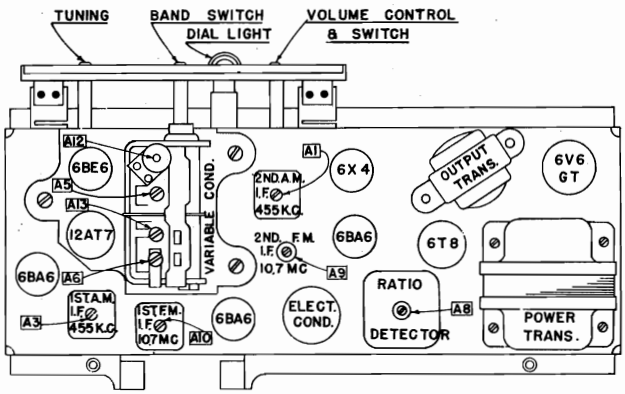

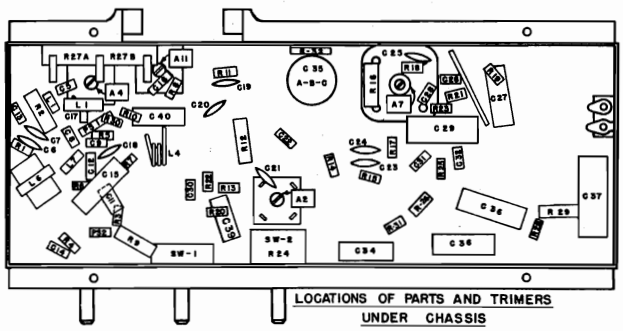

LOCATIONS OF PARTS AND TRIMERS UNDER CHASSIS

©John F. Rider

Compliments of www.nucow.com

MODELS 480TFM, 481TFM,
Ch. RE-277, RE-277-1

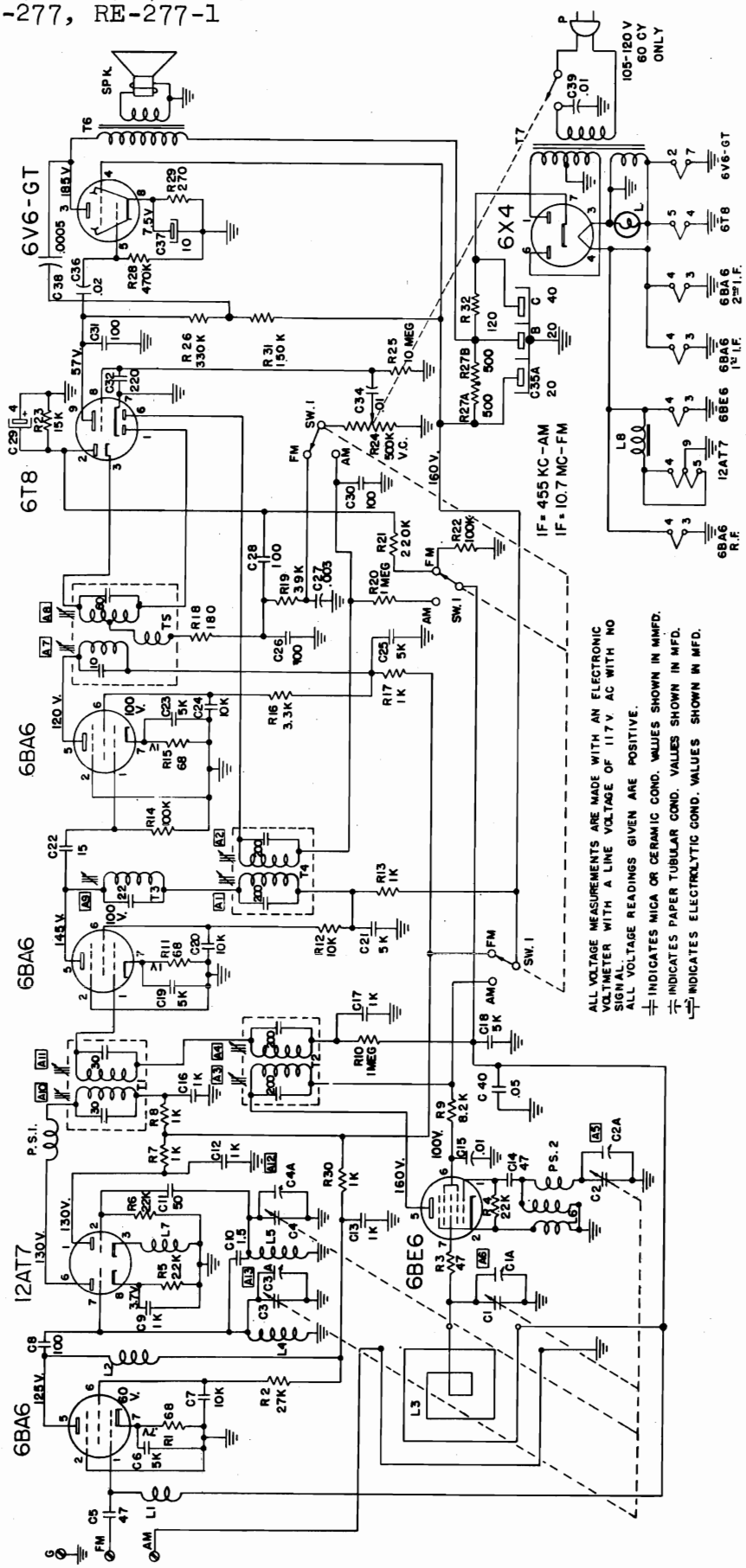

NOTE:
The Schematic Diagram printed in this bulletin is for Chassis RE-277-1 which includes a bass boost & hum reduction circuit. Chassis RE-277 differs from Chassis RE-277-1 in the following respects.

1. C38 was .02 uf. 400 V., and was connected from plate to screen of the 6V6GT tube.
2. R31, 150 K ohm ¼ watt Resistor, was not included in the circuit and R26 connected directly to B+ 140 V.
3. R32, 120 ohm 1 wat tresistor, was not included in the circuit and C35B electrolytic condenser section connected to the center tap of R27.

The two chassis are identified by the proper RE numbers on the Model Number label on the bottom of the cabinet.

©John F. Rider

Compliments of www.nucow.com

MODELS 482CFB, 482CFM,
Ch. RE-288-1

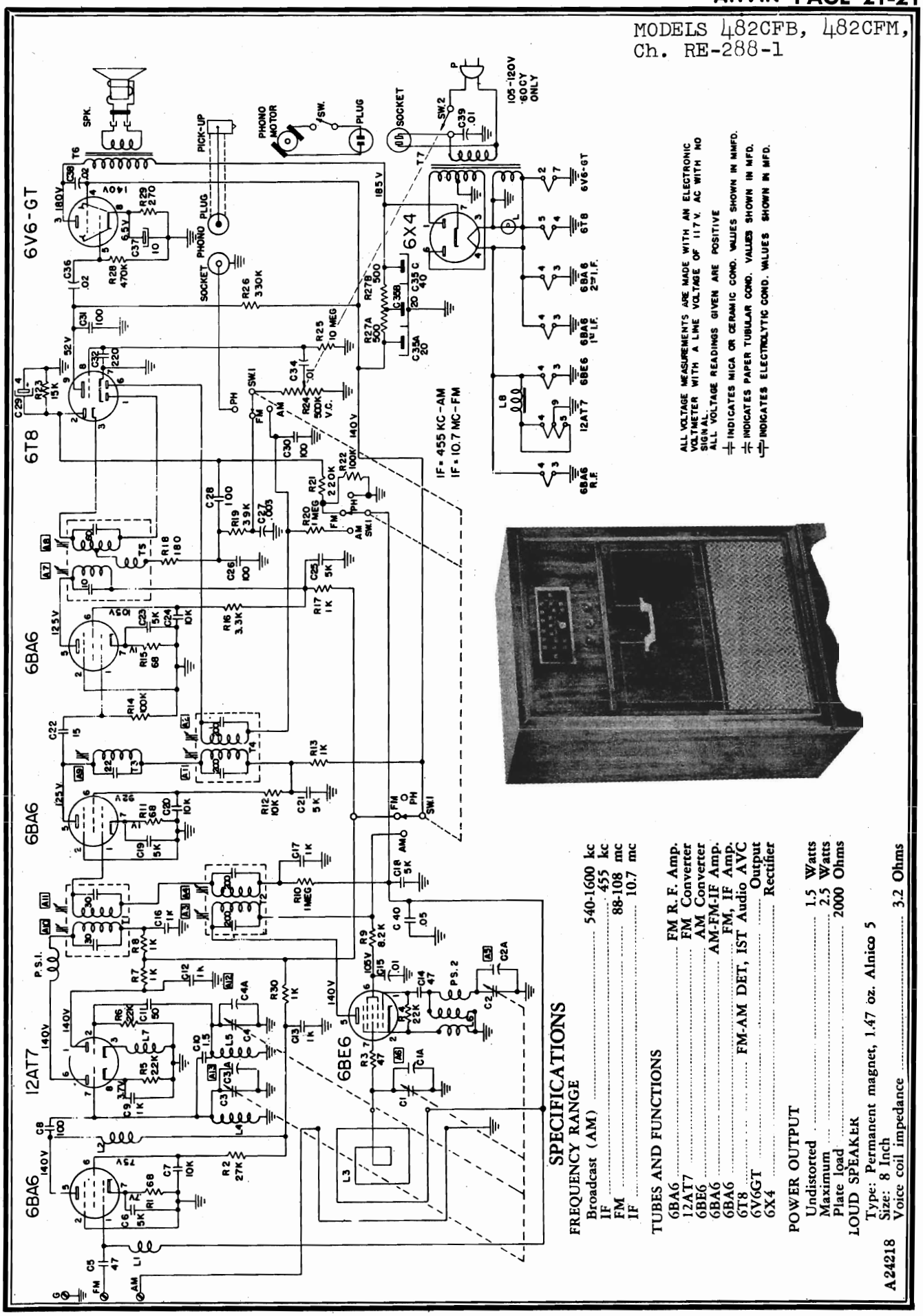

SPECIFICATIONS

FREQUENCY RANGE

Broadcast (AM)	540-1600 kc
IF	455 kc
FM	88-108 mc
IF	10.7 mc

TUBES AND FUNCTIONS

6BA6	FM R. F. Amp.
12AT7	FM Converter
6BE6	AM Converter
6BA6	AM-FM-IF Amp.
6BA6	FM, IF Amp.
6T8	FM-AM DET, IST Audio AVC
6V6GT	Output
6X4	Rectifier

POWER OUTPUT

Undistorted	1.5 Watts
Maximum	2.5 Watts
Plate load	2000 Ohms

LOUD SPEAKER

Type: Permanent magnet, 1.47 oz. Alnico 5
Size: 8 Inch
Voice coil impedance ..... 3.2 Ohms

A24218

©John F. Rider

Compliments of www.nucow.com

MODELS 482CFB, 482CFM,
Ch. RE-288-1

TECHNICAL INFORMATION

AM Tuning range — 540 Kc. to 1600 Kc. Immediate Frequency — 455 Kc. I. F. and R. F. measurements made at 500 milliwatts output — approximately 1.27 volts on a receiver type voltmeter connected across speaker voice coil. Approximate input for 500 MW output: I. F. 300 uv; R. F. with standard loop: at 600 Kc. 1200 uv/m; at 1000 Kc. 900 uv/m; at 1400 Kc. 800 uv/m.

FM Tuning range — 88 megacycles to 108 megacycles. Intermediate frequency 10.7 megacycles .I.F. and R.F. measurements made at 500 milliwatts output — approximately 1.27 volts on a rectifier type voltmeter connected across speaker voice coil. Approximate input for 500 MW output: I. F. 300 uv; R. F. "Absolute Measurements": 91 megacycles 100 uv; 105 megacycles, 100 uv.

ALIGNMENT PROCEDURE

Output meter connection ..... Across speaker voice coil
Output meter reading to indicate 500 MW ..... 1.27 volts
Generator Modulation ..... 30%, 400 cycles
Position of volume control ..... Fully clockwise

Set dial pointer ..... Horizontal, variable condenser closed
Set band switch ..... To left for AM alignment, right for FM alignment

AM ALIGNMENT

Position of Variable	Generator Frequency	Dummy Ant.	Generator Connection (high)	Generator Connection Ground Lead	Adjust Trimmers In Order Shown For Max. Output	Trimmer Function
Open	455 Kc	.05 mfd.	Mixer Grid	Chassis	A1, A2, A3, A4,	I. F.
Open	1650 Kc		*Test Loop	Test Loop	A5	Oscillator
1400 Kc	1400 Kc		*Test Loop	Test Loop	A6	Antenna
**600 Kc	600 Kc		*Test Loop	Test Loop	Check Point	Antenna

* Connect generator lead to Standard Hazeltine Test Loop, Model 1150, placed two feet from the set loop, or three turns of wire about six inches in diameter, placed about one foot from the set loop. Or the generator can be connected with the high side lead to the AM antenna screw terminal and the ground lead to the chassis.
**With a generator signal of 600 Kc, tune the set to the point where maximum output is obtained, which shoul be approximately 600 Kc on the dial. Adjust antenna section plates of variable for maximum output.
The alignment procedure should be repeated in the original order for greatest accuracy.
Always keep the output from the signal generator at its lowest possible value to make the A. V. C. action of the receiver ineffective.

FM ALIGNMENT

1. Turn band switch to FM, (right).

2. Connect (FM) I. F. generator to the second 6BA6 I. F. amp. grid, (lug No. 1) through a .01 uf mica dummy. Connect oscilloscope across volume control. With the I. F. generator tuned to 10.7 mc with 150 Kc deviation, and the same audio voltage used as horizontal sweep on the scope that is used to modulate the generator, adjust the ratio detector transformer slugs A7-A8 for the characteristic "S" curve (See Fig. 1), with maximum vertical height on the scope. After this adjustment the top slug of the ratio detector should not be moved during the rest of the alignment.

3. Connect I. F. generator to mixer grid through .01 mica dummy. Using 23 Kc deviation at 10.7 Mc, adjust for maximum output. Maximum output may be indicated by maximum vertical height on the scope or maixmum voltage on a standard output meter across the voice coil of the receiver. After the two I. F. transformers have been ligned the bottom slug A8 of the ratio detector should also be peaked.

   The characteristic "S" curve of the complete I. F. channel should be checked by applying a 10.7 Mc signal with 150 Kc deviation to the mixer grid and observing the "S" curve on the scope. It should not be very much different from that observed in step 2.

4. Connect R. F. (FM) generator (88 to 108Mc) to the antenna terminals through the standard 300 ohm dummy (150 ohm in each side of generator leads).

   Use R. F. generator with 23 Kc deviation. With the variable condenser completely open and Signal Generator tuned to 108.5 Mc adjust oscillator trimmer A12 (small ceramic trimmer) for maximum reading on output meter.

   Then tune receiver to low end of band (variable completely closed) and Signal Generator to 87.5 Mc. If the receiver does not tune to this frequency the FM oscillator coil L4 will either have to be squeezed together or lengthened to cover the band, (squeezing lowers and lengthening raises the frequency). Any change in the coil will have to be completed by the trimmer at the high end of the band.

5. With the same Signal Generator connections as per paragraph 4 tune Signal Generator and set to 105 Mc. Tune R. F. trimmer A13 for maximum output at the same time rock variable back and forth through the frequency. (Rocking is necessary because slight oscillator pulling causes erroneous maximum readings).

   Tune Signal Generator and set to 90 Mc. Adjust R. F. coil L3 length for maximum output by squeezing or lengthening. Any change in the coil will have to be compensated at 105 Mc by the R. F. trimmer A13.

6. After Steps 4 and 5 are finished check calibration and band coverage. Steps 4 and 5 may have to be repeated if set is off calibration. Band coverage should be 87.5 Mc to 108.5 Mc. Sensitivity should be approximately 100 uv at 105 Mc, 98 Mc and 90 Mc.

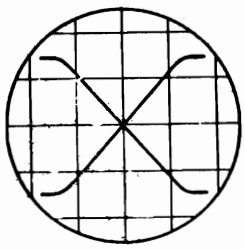

FIG 1

©John F. Rider

Compliments of www.nucow.com

MODELS 482CFB, 482CFM,
Ch. RE-288-1

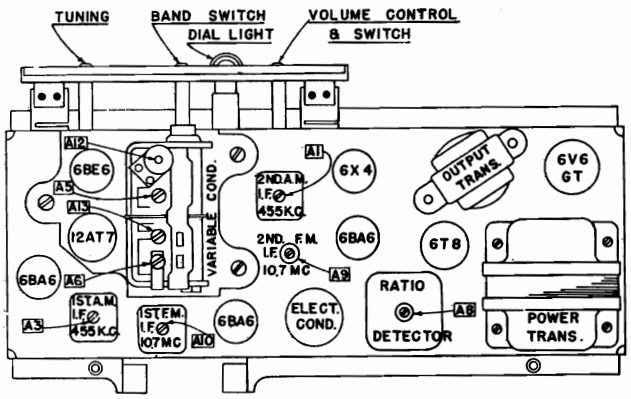

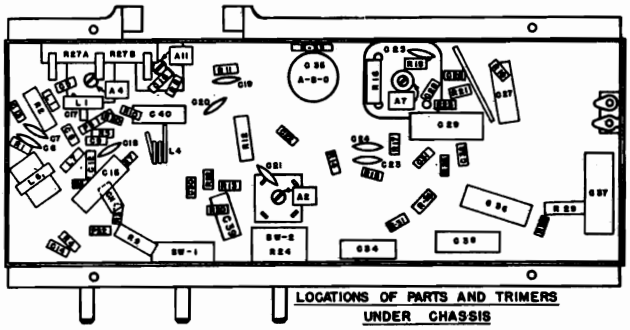

PARTS LIST FOR 482 CFM, CFB

Schematic Location	Part No.	Description
	D22586	Antenna Loop Assembly
	B22953	Bracket, Antenna Loop Mounting
	C23427	Bracket, Dial [2 used]
	R23689	Cabinet, Mahogany [with Carton]
	R23689-1	Cabinet, Blonde [with Carton]
C1, C2, C3, C4	R22962	Capacitor, Variable, 4-gang
C4A	A22724	Capacitor, FM Oscillator Trimmer, 5-25 uuf
C10	A20238-3	Capacitor, 1.5 uuf, 350 V, Gimmick
C22	C20203-150	Capacitor, 15 uuf, 350V, Ceramic
C5, C14	C20203-470	Capacitor, 47 uuf, 350V, Ceramic
C11	C20205-5	Capacitor, 50 uuf, 500V, Ceramic
C20, C8, C26 C30, C31	C20203-101	Capacitor, 100 uuf, 350V, Ceramic
C32	C20203-221	Capacitor, 220 uuf, 350V, Ceramic
C38	C20069-501	Capacitor, .0005 mfd., 600V, Paper
C9, C12, C13 C16, C17	C20203-102	Capacitor, 1000 uuf, 350V, Ceramic
C27	C20069	Capacitor, .003 mfd., 600V, Paper
C6, C18, C19, C21, C23, C25	A21674	Capacitor, 5000 uuf, 350V, Disc Ceramic
C7, C20, C24	A22295	Capacitor, 10,000 uuf, 350V, Disc Ceramic
C15, C34	C20068-103	Capacitor, .01 mfd., 400V, Paper
C39	C20249-103	Capacitor, .01 mfd., 400V, Phenolic
C36	C20068-203	Capacitor, .02 mfd., 400V, Paper
C40	C20067-503	Capacitor, .05 mfd., 200V, Paper
C29	A22659	Capacitor, 4 mfd., 25V, Electrolytic
C37	A22602	Capacitor, 10 mfd., 25V, Electrolytic
C35	A22806	Capacitor, 20-20-40 mfd., 250V, Electrolytic
		Changer, 3-speed Record [See V-M Model 950]
L1	AA22648-1	Choke, 1.5 uh
L7	AA22597-1	Choke, 3 uh
L2	AA21445-1	Choke, 7.5 uh
L8	A21673	Choke, 14 uh, Iron Core
L6	AC22587-1	Coil, Oscillator, AM
L5	A22594	Coil, Oscillator, FM
L4	A22593	Coil, R F, FM
R24-SW2	C22963	Control, Volume, & Switch, 500K ohms
	C23707	Cover, Cabinet Rear
	C23578	Cover, Record Changer Bottom
	A23594	Dial Pointer [Mahogany]
	A23594-1	Dial Pointer [Blonde]
	D23700	Dial Scale [Mahogany]
	D23700-1	Dial Scale [Blonde]
	C23402	Escutcheon & Crystal
	D23706-4	Knobs, Ph-AM-FM [Mahogany]

Schematic Location	Part No.	Description
	D23706-12	Knob, Ph-AM-FM [Blonde]
	D23706-3	Knob, Tuning [Mahogany]
	D23706-11	Knob, Tuning [Blonde]
	D23706-1	Knob, Volume, On-Off [Mahogany]
	D23706-9	Knob, Volume, On-Off [Blonde]
	A19351	Lamp, Dial, Mazda No. 47
	B20138-14	Line Cord & Plug
PS-1	AA22345-1	Parasitic Suppressor
PS-2	AA22334-1	Parasitic Suppressor
R-3	C20060-470	Resistor, 47 ohms 20%, ½W
R1, R11, R15	C20060-680	Resistor, 68 ohms 20%, ½W
R32	A23933	Resistor, 120 ohms, 10%, 1W
R18	C22381-181	Resistor, 180 ohms 10%, ½W
R29	C20070-271	Resistor, 270 ohms 10%, 1W
R27	A22624	Resistor, 2x500 ohms, 5 Watts
R7, R8, R13, R17, R30	C20060-102	Resistor, 1K ohms 20%, ½W
R5	C20060-222	Resistor, 2.2K ohms 20%, ½W
R16	C20070-332	Resistor, 3.3K ohms 10%, 1W
R9	C20070-822	Resistor, 8.2K ohms 10%, 1W
R12	C20070-103	Resistor, 10K ohms 10%, 1W
R23	C22381-153	Resistor, 15K ohms 10%, ½W
R4, R6	C20060-223	Resistor, 22K ohms 20%, ½W
R2	C20070-273	Resistor, 27K ohms 10%, 1W
R19	C20120-393	Resistor, 39K ohms 20%, ½W
R14, R22	C20060-104	Resistor, 100K ohms 20%, ½W
R31	C20060-154	Resistor, 150K ohms 20%, ½W
R21	C20060-224	Resistor, 220K ohms 20%, ½W
R26	C20060-334	Resistor, 330K ohms 20%, ½W
R28	C20060-474	Resistor, 470K ohms 20%, ½W
R10, R20	C20060-105	Resistor, 1 megohm 20%, ½W
R25	C20060-106	Resistor, 10 megohms 20%, ½W
	A19551	Socket, AC, Phono Motor
	A23537-1	Socket, Dial Lamp
	A19552	Socket, Phono Pickup
	A19579	Socket, Speaker
	AD23693-1	Speaker Assy. 8" PM with Cable And Plug
	A19133	Spring, Dial Cord
	C23485	Switch, Band
	A22960	Terminal Strip, Antenna
T1	C22590	Transformer, I.F., 1st F.M. [10.7 Mc]
T2, T4	C22352	Transformer, I.F. AM [455 Kc]
T3	AC22967-1	Transformer, I.F.,2nd F.M. [10.7 Mc]
T6	AC23669-1	Transformer, Output
T7	D22959	Transformer, Power
T5	AD22592-1	Transformer, Ratio Detector
	A22957	Tuning Shaft
	A19361	Tuning Shaft Hair Pin Clip
	A22763	Weight, Cabinet, Steel

©John F. Rider

Compliments of www.nucow.com

Compliments of www.nucow.com

HUDSON, 1948-
1949-1950

DESCRIPTION

Your new Automobile Receiver is a 6-tube (including rectifier) superhetrodyne, designed to operate from the 6-volt storage battery in your car. It is custom-built to mount behind the instrument panel in the place provided for a radio by the automobile manufacturer. It has a self-contained PM speaker and covers the frequency range 538 to 1600 KC. Two simple controls are provided for operating the receiver. (See Fig. 1.)

This receiver has been designed with a tuned RF stage and a 3-gang tuning condenser thereby insuring the finest in sensitivity and selectivity. Any standard two or three section whip or "fish pole" antenna will provide good reception of distant or weak stations. The unit is simple to install and requires no electrical adjustment after installation.

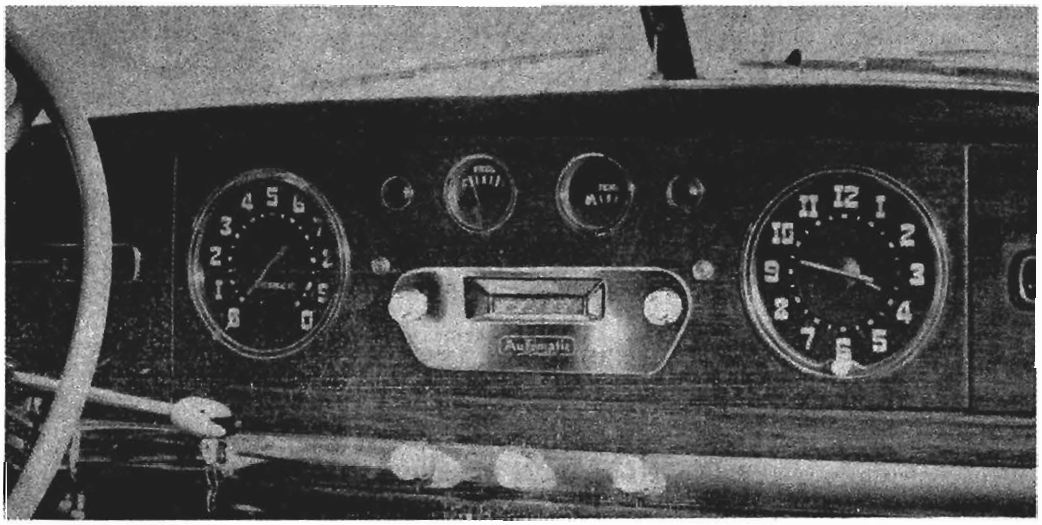

Fig. 1

OPERATION

VOLUME CONTROL KNOB

This knob is located on the left side of the radio. Turning this knob slightly to the right until a slight click is heard will put the radio into operation. Turning this knob further to the right will increase the volume and turning it to the left will decrease the volume. After a station has been selected, the volume control should be adjusted to the desired level. The volume should never be reduced by detuning the station selector knob.

STATION SELECTOR KNOB

This knob is located on the right side of the radio. This knob should be turned until a desired station has been selected. Adjust this knob very carefully until the statio ı comes in with the most natural tone.

INSTALLATION

1. Remove screws securing radio speaker grille and cardboard speaker opening cover plate.
2. Discard cardboard cover plate and speaker mounting screws.
3. Replace radio speaker grille in original position on the instrument panel and secure with 1¼" long No. 8-32 oval head Phillips screws. (4 supplied in kit of hardware.)

   NOTE: Some automobile models are not equipped with a Radio speaker grille. A Radio speaker grille must be obtained from an authorized Hudson dealer before an installation can be made.
4. Insert power supply unit under instrument panel and position so that slots on cover of power supply unit line up with speaker grille mounting screws and power cable is located on left hand side.
5. Secure in place with cupwashers and 8-32 wing nuts.
6. Remove speed nuts attaching radio opening dummy cover plate.
7. Remove dummy cover plate and discard.

©John F. Rider

Compliments of www.nucow.com

HUDSON, 1948-
1949-1950

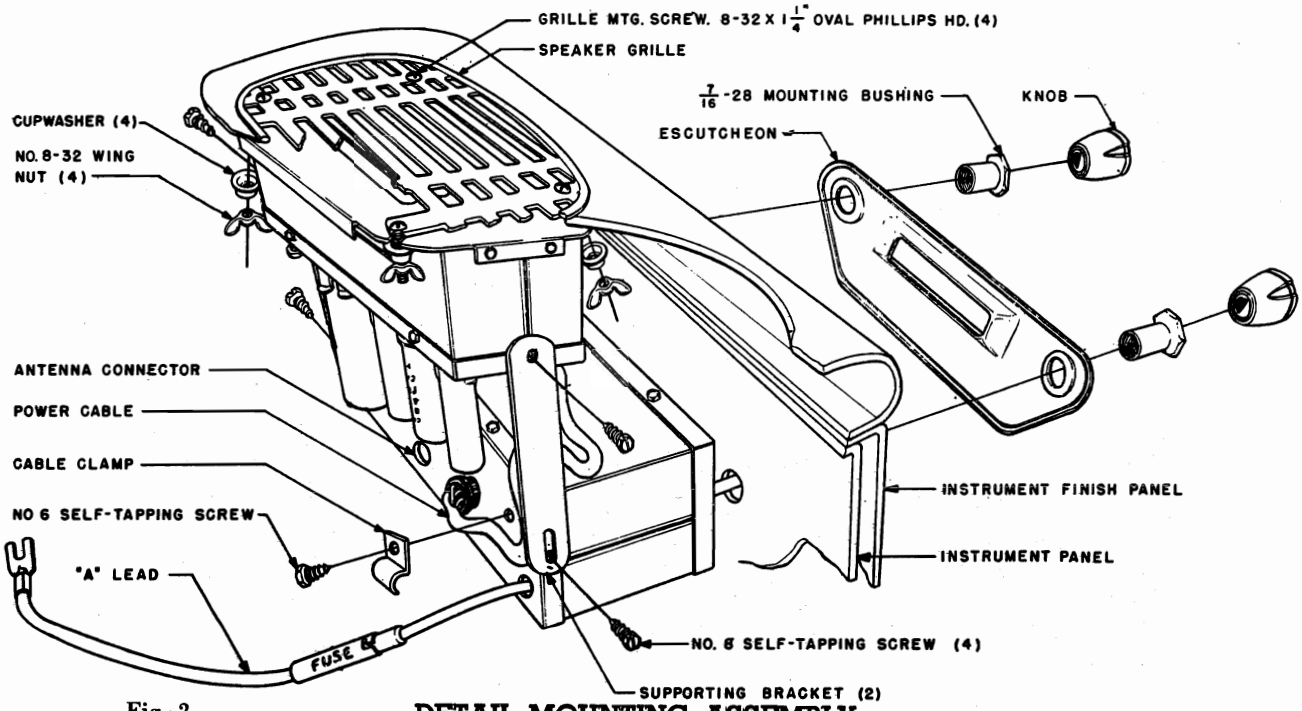

Fig. 2

DETAIL MOUNTING ASSEMBLY

INSTALLATION (Continued)

8. Remove knobs, mounting bushings and escutcheon from RF Tuning Unit.
9. Position RF Tuning Unit behind instrument panel so that control shafts protrude through the instrument panel.
10. Place escutcheon over control shafts on instrument panel front.
11. Attach RF Tuning Unit and escutcheon to instrument panel with two mounting bushings previously removed.
12. Replace knobs on control shafts.
13. Secure a supporting bracket (2 supplied in kit of hardware) to each side of power pack with two No. 8 self-tapping screws. Use end of supporting bracket with round hole.
14. Swing supporting brackets so that slotted holes are in line with holes on each side of tuning unit.
15. Secure to RF tuning unit with two No. 8 self-tapping screws.
16. Connect cable from Power Supply Unit to RF Tuning Unit.
17. Secure Power Supply cable under clamp on RF Tuning Unit.
18. Connect "A" lead to battery terminal on circut breaker mounted over the steering column behind the instrument panel. (See fig. 3.)
19. Plug antenna cable into tuning unit.

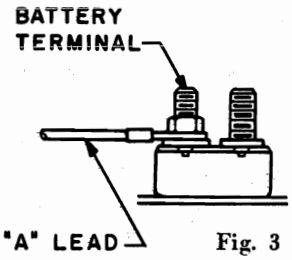

Fig. 3

ACCESSORIES FURNISHED FOR INSTALLATION

MOUNTING PARTS KIT

The following mounting hardware parts are shipped attached to the receiver.
(See detail assembly drawing FIG. 2)

2 7/16-28 mounting bushings
2 Knobs
1 Cable clamp

An envelope containing additional mounting hardware is supplied with this receiver. It contains the following parts:

2 Supporting brackets
4 No. 8 self-tapping screws
4 8-32 wing nuts
4 cup washers
4 8-32 x 1¼ oval head Phillips screws.

©John F. Rider

Compliments of www.nucow.com

HUDSON, 1948-
1949-1950

MOTOR NOISE ELIMINATION

SUPPRESSION KIT

A suppression kit is shipped with this receiver. It contains the following parts:
1 Generator Condenser.
1 Distributor suppressor.

DISTRIBUTOR SUPPRESSOR

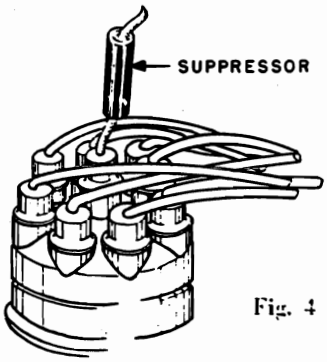

Fig. 4

Disconnect the high tension wire that runs from the ignition coil to the center hole of the distributor cap. Cut lead one inch back from the metal tip end. Screw suppressor into cut end of long lead. Screw cut end of short lead into suppressor. Plug lead with attached suppressor back into distributor cap.

GENERATOR CONDENSER

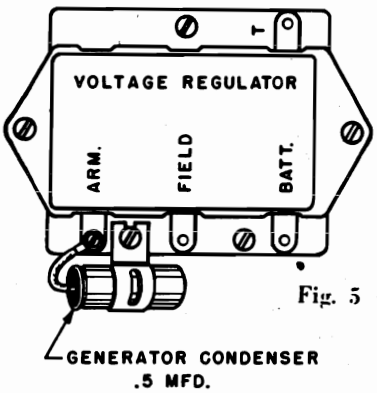

Fig. 5

Loosen voltage regulator mounting screw. Insert slotted end of generator condenser mounting bracket under this screw and tighten screw. Connect condenser lead to armature terminal marked "ARM."

The generator condenser and distributor suppressor will normally eliminate all objectionable motor noise in most cases. If the motor noise persists the following steps should be taken. Check operation of radio as each step is made.

WHEEL STATIC

Wheel static is a form of interference caused by the rotation of the front wheels of the car, and it is, of course, only noticed when the car is in motion. If this form of interference is present, it can be eliminated by installing wheel static collector springs between the inner hub cap and the spindle shaft.

AMMETER CONDENSER

A .5 MFD by-pass condenser should be connected to either side of the ammeter with the ground lug fastened to a good ground nearby.

ELECTRICAL ACCESSORIES

In some cases, it may be found that car accessories such as electric heaters, lighters, automatic relays or gauges, may cause interference while in operation. Proper procedure in such cases is to connect a .5 MFD by-pass condenser from ground to the suspected accessory until the source of interference is found. The condenser then should be permanently mounted in this location.

©John F. Rider

Compliments of www.nucow.com

HUDSON, 1948-
1949-1950

SERVICE DATA
ELECTRICAL SPECIFICATIONS

Power Supply	6.3 Volts DC
Current	5.5 Amp. average
Frequency Range	538-1600 KC
Speaker	5¼" PM
Power Output	2 watts, undistorted 3 watts, maximum
Sensitivity	2-3 microvolts average for 1 watt output
Selectivity	40 KC broad at 1000 times signal, at 1000 KC

This receiver contains the following:
1—6BA6—RF Amplifier
1—6BE6—Converter
1—6BA6—I. F. Amplifier
1—6AT6—Detector—AVC—1st Audio
1—6AQ5—Power Output
1—6X4—Rectifier

SERVICE NOTES

Voltage taken from the different points of the circuit to the chassis are measured with volume control in maximum position, all tubes in their sockets, no signal applied, and with a volt meter having a resistance of 20,000 Ohms per volt. These voltages are clearly shown on the voltage chart. (Fig. 7 and 7A).
All voltages should be measured with an input voltage of 6.3 volts DC.
To check for open by-pass condensers, shunt each condenser with another one having the same capacity and voltage rating which is known to be good until the defective unit is located.

ALIGNING INSTRUCTION

Never attempt any adjustments on this receiver unless it becomes necessary to replace a coil or transformer, or the adjustments have been tampered with in the field. Always make certain that other circuit components, such as tubes, condensers, resistors, etc., are normal before proceeding with realignment.
If realignment is necessary follow the instructions given under the heading "Alignment Procedure." After realignment has been completed repeat the procedure as final check.

DIAL CORD DRIVE

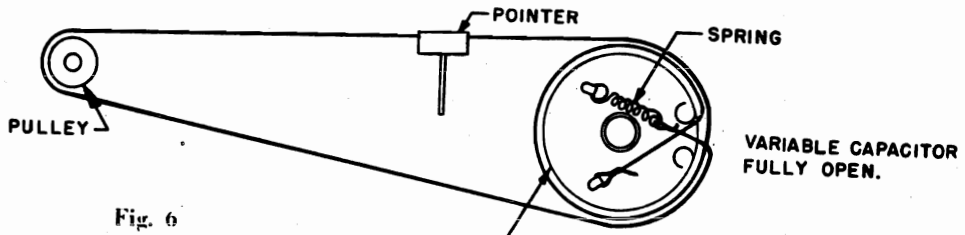

Fig. 6

ALIGNMENT PROCEDURE

Volume control—Maximum, all adjustments.
No signal applied to antenna.
Power input—6.3 volts.
Connect dummy antenna in series with output lead of signal generator.
Connect ground lead of signal generator to chassis.
Repeat alignment procedure as a final check.

The following equipment is necessary for proper alignment:
Signal generator that will provide the test frequencies as listed, modulated 400 cycles, 30%.
Non-metallic screwdriver.
Output meter. (1.8 volt for 1 watt output.)
Dummy antennas—.1 MFD., 100 MMFD.
For alignment points refer to Schematic Diagram.

Dial Setting	*Generator Frequency*	*Dummy Ant.*	*Generator Connection*	*Trimmer Reference*	*Trimmer Adjustment*	*Trimmer Function*
1) Fully open	455 KC	.1 MFD	6BE6 Grid	T2 Top & bottom	Maximum	Output I.F.
2) Fully open	455 KC	.1 MFD	6BE6 Grid	T1 Top & bottom	Maximum	Input I.F.
3) Fully open	1600 KC	100 MMFD	Ant. lead	CV2	Maximum	Oscillator
4) Tune in signal from generator	1400 KC	100 MMFD	Ant. lead	CV3	Maximum	RF Stage
5) Tune in signal from generator	1400 KC	100 MMFD	Ant. lead	CV1	Maximum	Antenna
6) Tune in signal from generator	600 KC	100 MMFD	Ant. lead	L3	Maximum	RF Stage
7) Tune in signal from generator	600 KC	100 MMFD	Ant. lead	L2	Maximum	Antenna
8) Repeat steps 4 and 5						

©John F. Rider

Compliments of www.nucow.com

PARTS LIST

CONDENSERS

Schematic Diagram Reference	Part No	Description
C2, C3, C5	C207	.05 MFD 200 volt condenser
C4, C12	C209	.5 MFD 100 volt condenser
C6	CC200	100 MMFD ceramic condenser
C7, C9	CC201	200 MMFD ceramic condenser
C8	C203	.002 MFD 400 volt condenser
C10, C13	C206	.01 MFD 400 volt condenser
C11	C205	.008 MFD 1600 volt condenser
CE86	CE-86	20 MFD 350 volt electrolytic condenser 20 MFD 350 volt electrolytic condenser 20 MFD 25 volt electrolytic condenser
CV1-CV2-CV3	CV-100	3 section variable

RESISTORS

R1	R309	1 megohm ½ watt 20% resistor
R2, R14	R303	330 ohm ½ watt 20% resistor
R3	R306	20K ohm ½ watt 20% resistor
R4	R314	1.5K ohm ½ watt 20% resistor
R5	RV-100	Volume control ¾ megohm with switch
R6	R310	2 megohm ½ watt 20% resistor
R7	R311	10 megohm ½ watt 20% resistor
R8	R313	20K ohm 2 watt 20% resistor
R9	R307	250K ohm ½ watt 20% resistor
R10, R11	R301	100 ohm ½ watt 20% resistor
R12	R312	1K ohm 1 watt 20% resistor
R13	R308	500K ohm ½ watt 20% resistor

COILS AND TRANSFORMERS

L1-C1	L200	Motor noise elimination unit
L2	57FB-3	Antenna coil
L3	57FB-4	R.F. coil
L4	L201	R. F. oscillator coil
L5	L203	Choke, "A" line
L6	L202	Choke, vibrator hash
T2	1655-16	2nd IF transformer
T1	1655-16	1st IF transformer
T3	TV-100 or 318V-2	Vibrator transformer
T4		Output transformer (Part of speaker not furnished separately)

DIAL PARTS

H401	Dial Scale Assembly
D400	Dial Scale Escutcheon
PS100	Dial Pointer
H201	Grommet, rubber drive
T47	Pilot Light
H114	Pilot Light Socket
H203	Pulley, idler
H204	Spring, Dial drive String Tension
H115	String, dial drive

MISCELLANEOUS

A300	"A" lead assembly
H301	Case, less covers for Power Supply Unit
H100	Case, complete with covers for R.F. tuning unit
H207	Clip, Anti-rattle
H208	Clip, coil mounting
H102	Cover, power supply unit mounting (with speaker louvres)
A201	Fuse 15 Amp.
504PC-300	Power Cable Assembly (complete with plug)
H212	Receptacle, Antenna cable
504-FC	Socket, power cable
PM-705	Speaker, 5¼" PM (includes output transformer)
V-83	Vibrator
H310	Knob
H311	Cup washer
H113	7 16-28 Hex nut
C100	.5 MFD generator condenser
R100	Distributor suppressor
H402	7 16-28 Mounting bushing

BOTTOM VIEW OF CHASSIS

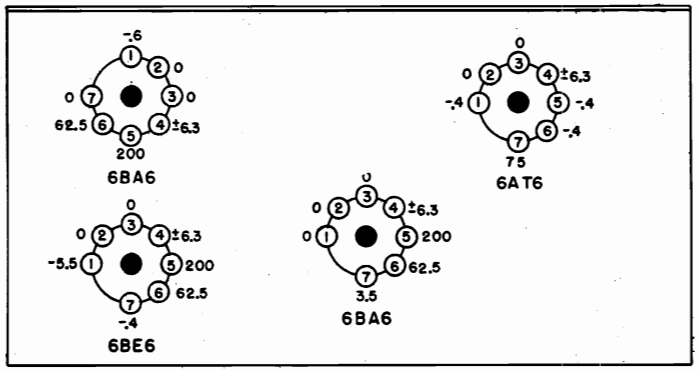

FRONT OF CHASSIS

Fig. 7

BOTTOM VIEW OF POWER PACK

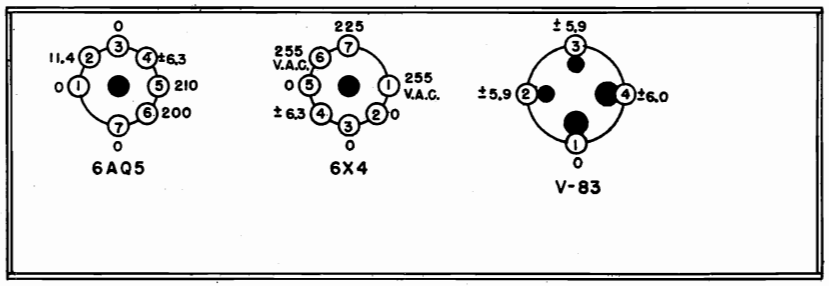

Fig. 7A

SOCKET VOLTAGES

© John F. Rider

Compliments of www.nucow.com

HUDSON, 1948-
1949-1950

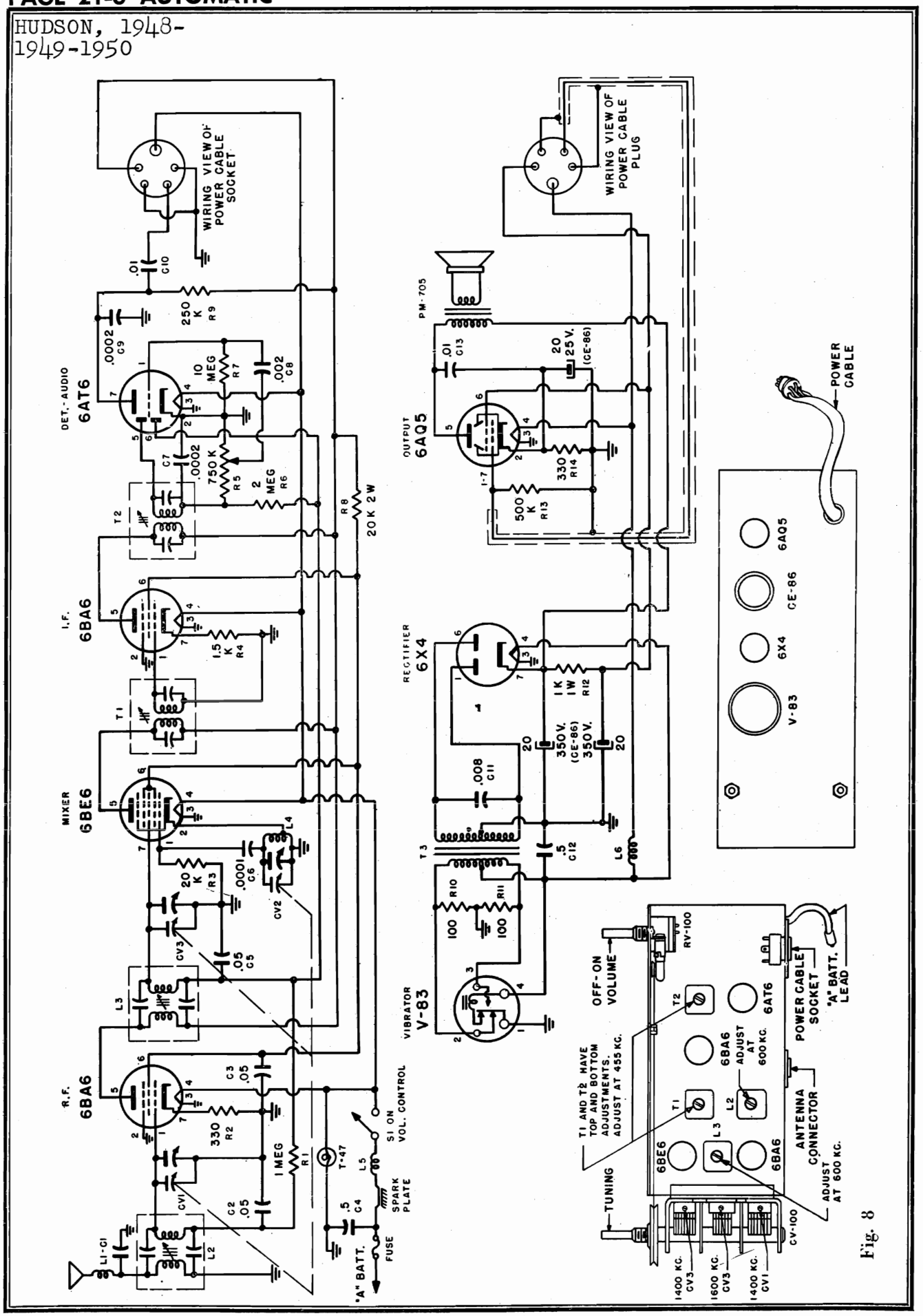

Fig. 8

©John F. Rider

Compliments of www.nucow.com

DESCRIPTION

Your new Automobile Receiver is a 6-tube (including rectifier) superhetrodyne, designed to operate from the 6-volt storage battery in your car. It is custom-built to mount behind the instrument panel in the place provided for a radio by the automobile manufacturer. It has a self-contained PM speaker and covers the frequency range 538 to 1600 KC. Two simple controls are provided for operating the receiver. (See Fig. 1.)

This receiver has been designed with a tuned RF stage and a 3-gang tuning condenser thereby insuring the finest in sensitivity and selectivity. Any standard two or three section whip or "fish pole" antenna will provide good reception of distant or weak stations. The unit is simple to install and requires no electrical adjustment after installation.

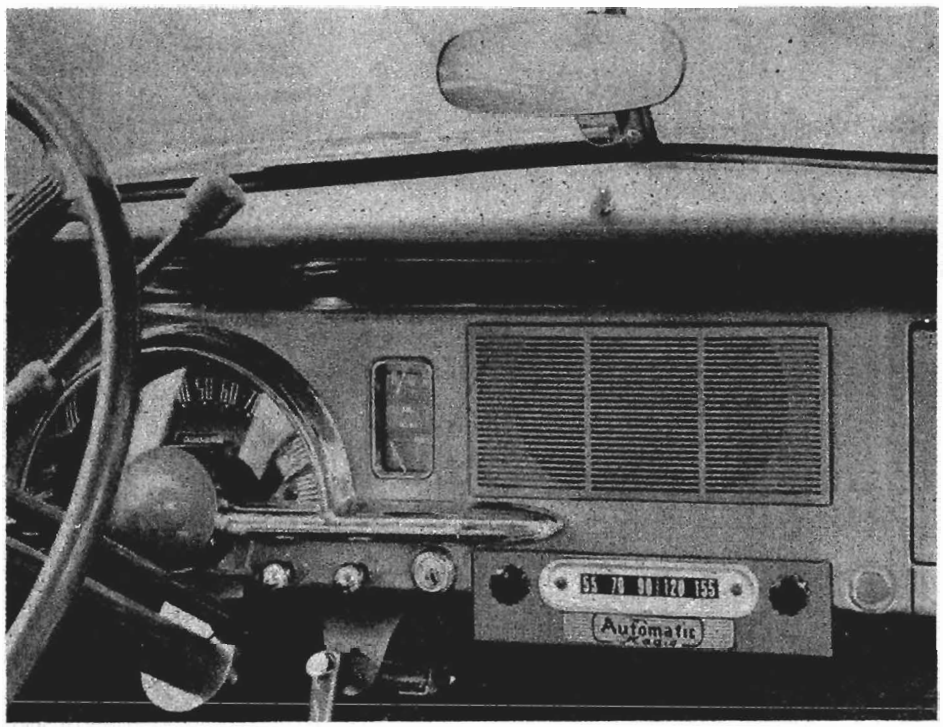

Fig. 1

OPERATION

VOLUME CONTROL KNOB

This knob is located on the left side of the radio. Turning this knob slightly to the right until a slight click is heard will put the radio into operation. Turning this knob further to the right will increase the volume and turning it to the left will decrease the volume. After a station has been selected, the volume control should be adjusted to desired level. The volume should never be reduced by detuning the station selector knob.

STATION SELECTOR KNOB

This knob is located on the right side of the radio. This knob should be turned until a desired station has been selected. Adjust this knob very carefully until the station comes in with the most natural tone.

INSTALLATION (See Fig. 2)

1. Attach rubber gasket baffle assembly to speaker grille on radio with 4 snap fasteners supplied in kit of mounting hardware.
2. Remove two screws securing radio opening cover plate to instrument panel.
3. Discard cover plate.
4. *Important:* Some car models have a cover over the speaker opening at the back of the instrument panel. Remove and discard this cover.
5. Lift hood of car and locate the two 5/16" holes which are in the Fire Wall just below the windshield wiper motor. Insert hook bolt through the right hand hole on the engine side.
6. Place a ¼-20 hex nut approximately one inch up on threaded end of hook bolt.
7. Position radio with attached rubber gasket baffle behind instrument panel and insert threaded end of hook bolt through hole on bracket attached to back of radio.
8. Screw ¼-20 hex nut on hook bolt. Adjust position of the two ¼-20 hex nuts so that the radio is mounted parallel to instrument panel. Tighten bottom hex nut.
9. Insert two ¼-20 Flat head bolts supplied in mounting kit through bottom edge of radio and screw into edge of instrument panel.
10. Connect "A" lead to terminal on ignition switch.
11. Plug antenna cable into receiver.

©John F. Rider

Compliments of www.nucow.com

STUDEBAKER, 1950

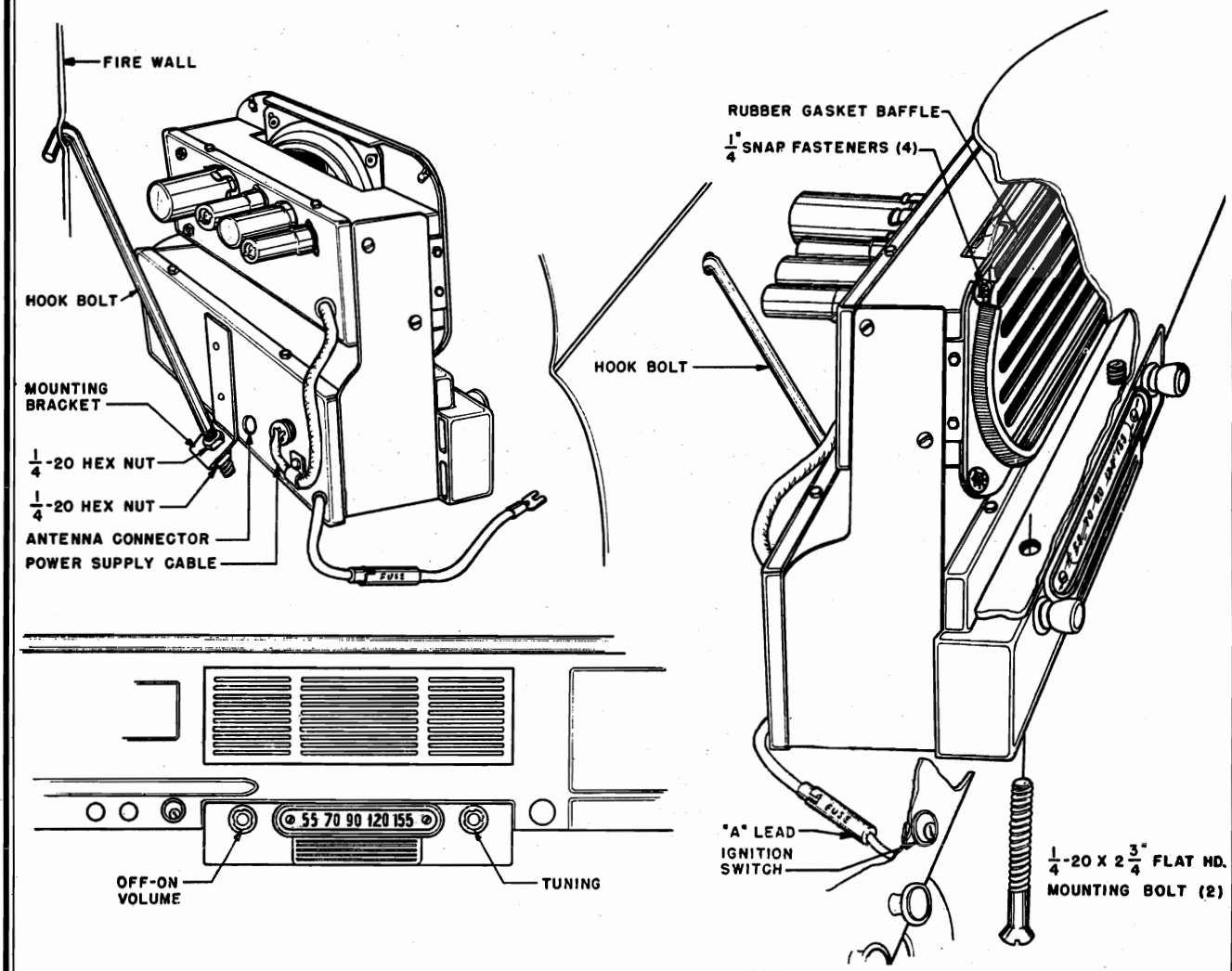

Fig. 2
MOUNTING PARTS KIT

DETAIL MOUNTING ASSEMBLY

ACCESSORIES FURNISHED FOR INSTALLATION

1 Rubber Gasket baffle assembly
4 ¼" snap fasteners
1 Hook bolt
2 ¼-20 hex nuts
2 ¼-20 x 2¾" flat head mounting bolts

MOTOR NOISE ELIMINATION

SUPPRESSION KIT

A suppression kit is shipped with this receiver. It contains the following parts:

1 Generator Condenser.
1 Distributor suppressor.

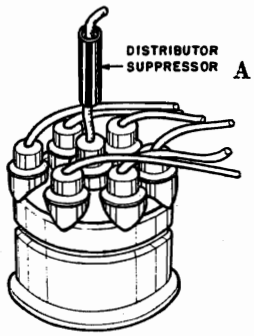

DISTRIBUTOR
Fig. 3

DISTRIBUTOR SUPPRESSOR

Disconnect the high tension wire that runs from the ignition coil to the center hole of the distributor cap. Cut lead one inch back from the metal tip end. Screw suppressor into cut end of long lead. Screw cut end of short lead into suppressor. Plug lead with attached suppressor back into distributor cap.

©John F. Rider

Compliments of www.nucow.com

GENERATOR CONDENSER

Loosen screw on top surface of generator near terminals. Insert slotted generator condenser bracket under screw head and tighten screw. Connect generator condenser lead to armature terminal. *Do not connect to field terminal.*

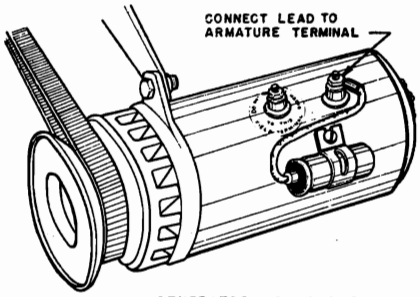

GENERATOR CONDENSER
Fig. 4

The generator condenser and distributor suppressor will normally eliminate all objectionable motor noise in most cases. If the motor noise persists the following steps should be taken. Check operation of radio as each step is made.

WHEEL STATIC

Wheel static is a form of interference caused by the rotation of the front wheels of the car, and it is, of course, only noticed when the car is in motion. If this form of interference is present, it can be eliminated by installing wheel static collector springs between the inner hub cap and the spindle shaft.

AMMETER CONDENSER

A .5 MFD by-pass condenser should be connected to either side of the ammeter with the ground lug fastened to a good ground nearby.

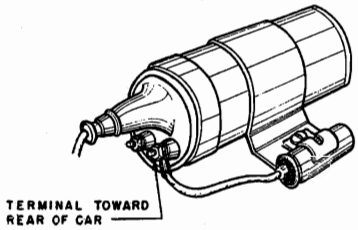

IGNITION COIL CONDENSER
Fig. 5

COIL CONDENSER

In some extreme cases it may be necessary to connect a .5 MFD by-pass condenser from the rear terminal of the spark coil to ground.

ELECTRICAL ACCESSORIES

In some cases, it may be found that car accessories such as electric heaters, lighters, automatic relays or gauges, may cause interference while in operation. Proper procedure in such cases is to connect a .5 MFD by-pass condenser from ground to the suspected accessory until the source of interference is found. The condenser then should be permanently mounted in this location.

ELECTRICAL SPECIFICATIONS

Power Supply	6.3 Volts DC
Current	5.5 Amp. average
Frequency Range	538-1600 KC
Speaker	5¼" PM
Power Output	2 watts, undistorted
	3 watts, maximum
Sensitivity	2-3 microvolts average for 1 watt output
Selectivity	40 KC broad at 1000 times signal, at 1000 KC

This receiver contains the following:
1—6BA6—RF Amplifier
1—6BE6—Converter
1—6BA6—I. F. Amplifier
1—6AT6—Detector—AVC—1st Audio
1—6AQ5—Power Output
1—6X4—Rectifier

SERVICE NOTES

Voltage taken from the different points of the circuit to the chassis are measured with volume control in maximum position, all tubes in their sockets, no signal applied, and with a voltmeter having a resistance of 20,000 Ohms per volt. These voltages are clearly shown on the voltage chart, (Fig. 7 and 7A).
All voltages should be measured with an input voltage of 6.3 volts DC.
To check for open by-pass condensers, shunt each condenser with another one having the same capacity and voltage rating which is known to be good until the defective unit is located.

ALIGNING INSTRUCTION

Never attempt any adjustments on this receiver unless it becomes necessary to replace a coil or transformer, or the adjustments have been tampered with in the field. Always make certain that other circuit components, such as tubes, condensers, resistors, etc., are normal before proceeding with realignment.
If realignment is necessary follow the instructions given under the heading "Alignment Procedure." After realignment has been completed repeat the procedure as final check.

©John F. Rider

Compliments of www.nucow.com

ALIGNMENT PROCEDURE

Volume control—Maximum, all adjustments.
No signal applied to antenna.
Power input—6.3 volts.
Connect dummy antenna in series with output lead of signal generator.
Connect ground lead of signal generator to chassis.
Repeat alignment procedure as a final check.

The following equipment is necessary for proper alignment:
Signal generator that will provide the test frequencies as listed, modulated 400 cycles, 30%.
Non-metallic screwdriver.
Output meter. (1.8 volt for 1 watt output.)
Dummy antennas—.1 MFD., 100 MMFD.
For alignment points refer to Schematic Diagram.

Dial Setting	*Generator Frequency*	*Dummy Ant.*	*Generator Connection*	*Trimmer Reference*	*Trimmer Adjustment*	*Trimmer Function*
1) Fully open	455 KC	.1 MFD	6BE6 Grid	T2 Top & bottom	Maximum	Output I.F.
2) Fully open	455 KC	.1 MFD	6BE6 Grid	T1 Top & bottom	Maximum	Input I.F.
3) Fully open	1600 KC	100 MMFD	Ant. lead	CV2	Maximum	Oscillator
4) Tune in signal from generator	1400 KC	100 MMFD	Ant. lead	CV3	Maximum	RF Stage
5) Tune in signal from generator	1400 KC	100 MMFD	Ant. lead	CV1	Maximum	Antenna
6) Tune in signal from generator	600 KC	100 MMFD	Ant. lead	L3	Maximum	RF Stage
7) Tune in signal from generator	600 KC	100 MMFD	Ant. lead	L2	Maximum	Antenna

8) Repeat steps 4 and 5

BOTTOM VIEW OF CHASSIS

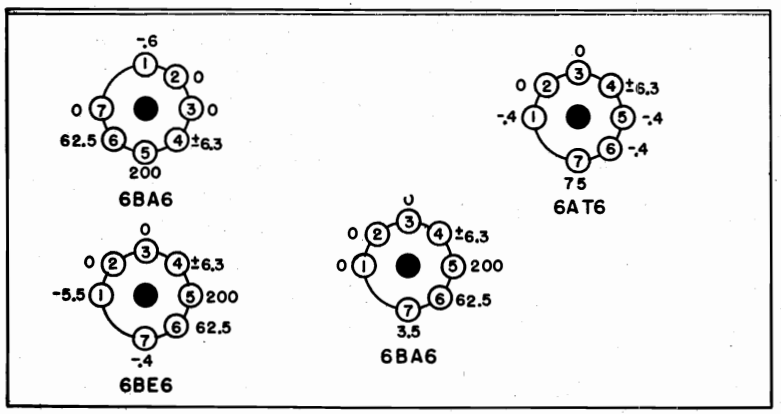

Fig. 7

FRONT OF CHASSIS

BOTTOM VIEW OF POWER PACK

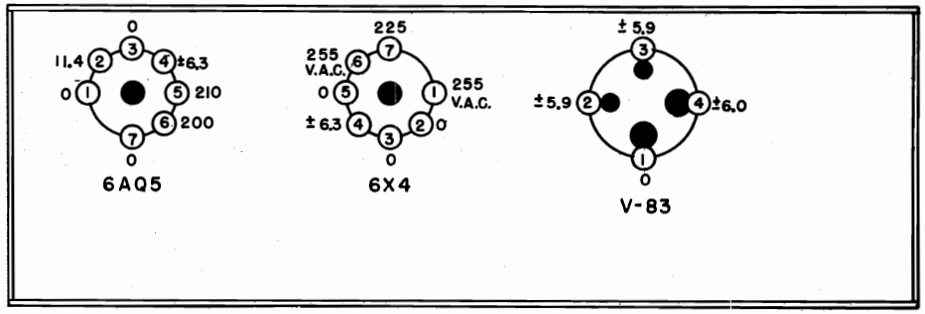

SOCKET VOLTAGES

Fig. 7A

©John F. Rider

Compliments of www.nucow.com

STUDEBAKER, 1950

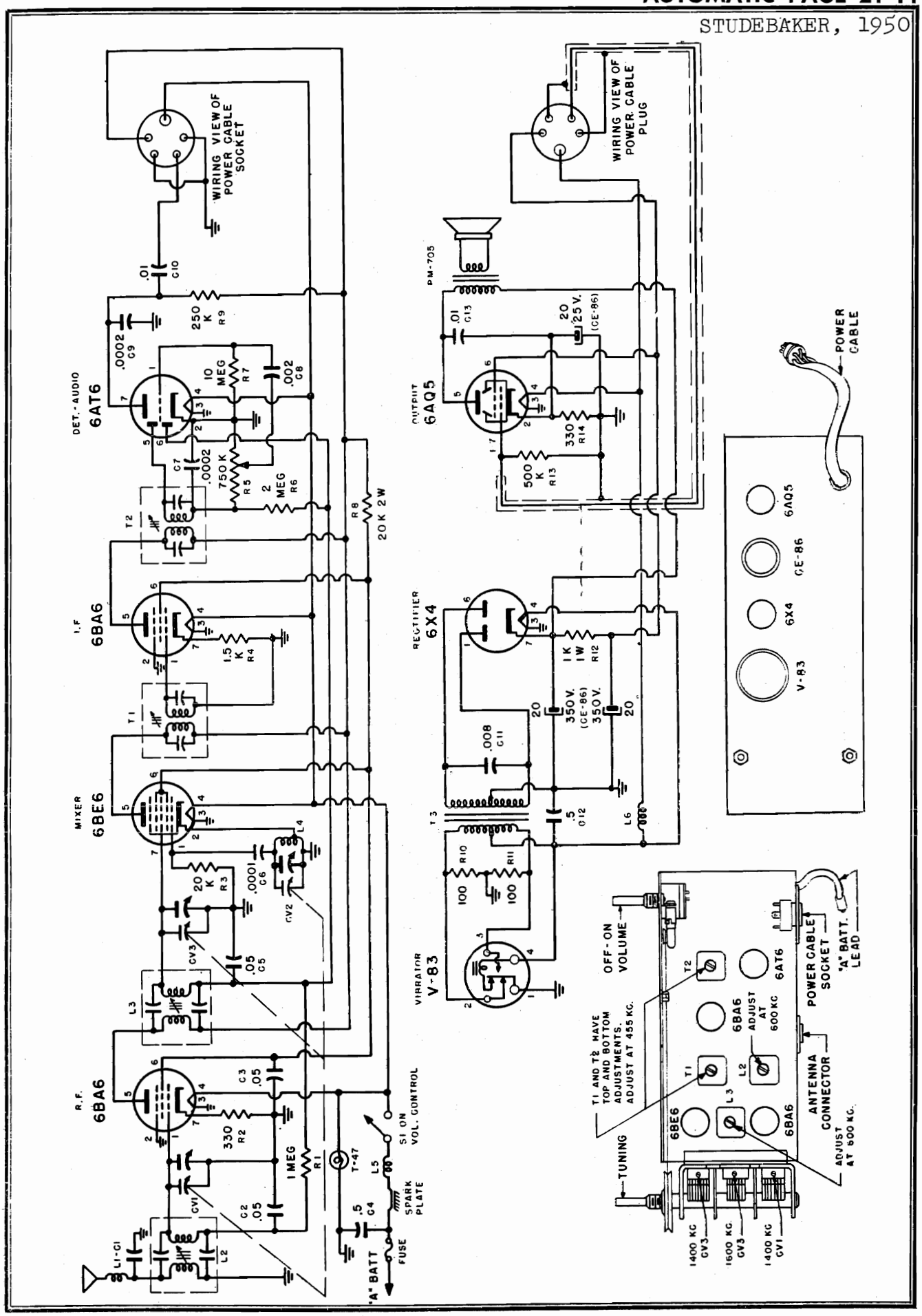

©John F. Rider

Compliments of www.nucow.com

STUDEBAKER, 1950

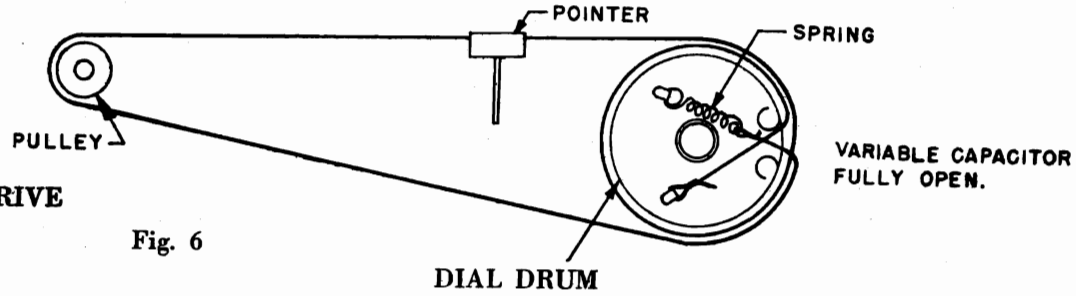

DIAL CORD DRIVE

Fig. 6

CONDENSERS

Schematic Diagram Reference	Part No.	Description
C2, C3, C5	C207	.05 MFD 200 volt condenser
C4, C12	C209	.5 MFD 100 volt condenser
C6	CC200	100 MMFD ceramic condenser
C7, C9	CC201	200 MMFD ceramic condenser
C8	C203	.002 MFD 400 volt condenser
C10, C13	C206	.01 MFD 400 volt condenser
C11	C205	.008 MFD 1600 volt condenser
CE86	CE-86	20 MFD 350 volt electrolytic condenser 20 MFD 350 volt electrolytic condenser 20 MFD 25 volt electrolytic condenser
CV1-CV2-CV3	CV-400	3 section variable

RESISTORS

R1	R309	1 megohm 1/2 watt 20% resistor
R2, R14	R303	330 ohm 1/2 watt 20% resistor
R3	R306	20K ohm 1/2 watt 20% resistor
R4	R314	1.5 K ohm 1/2 watt 20% resistor
R5	RV-570	Volume control 3/4 megohm with switch
R6	R310	2 megohm 1/2 watt 20% resistor
R7	R311	10 megohm 1/2 watt 20% resistor
R8	R313	20K ohm 2 watt 20% resistor
R9	R307	250K ohm 1/2 watt 20% resistor
R10, R11	R301	100 ohm 1/2 watt 20% resistor
R12	R312	1K ohm 1 watt 20% resistor
R13	R308	500K ohm 1/2 watt 20% resistor

COILS AND TRANSFORMERS

L1-C1	L200	Motor noise elimination unit
L2	15053 or 57FB-3	Antenna coil
L3	15054 or 57FB-4	R.F. coil
L4	L201	R.F. oscillator coil
L5	L203	Choke "A" line
L6	L202	Choke, vibrator hash
T2	14977 or 1655-16	2nd IF transformer
T1	14977 or 1655-16	1st IF transformer
T3	TV-100 or 318V-2	Vibrator transformer
T4		Output transformer (Part of speaker not furnished separately)

MISCELLANEOUS

A300	"A" lead assembly
H521	Case, less covers for Power Supply Unit
H520	Case, complete with covers for R.F. tuning unit
H207	Clip, Anti-rattle
H208	Clip, coil mounting
H102	Cover, power supply unit mounting (with speaker louvres)
H522	Cover, RF tuning unit, front (complete with plastic escutcheon)
A201	Fuse 15 Amp.
H524	Hook bolt
504PC-300	Power Cable Assembly (complete with plug)
H212	Receptable, Antenna cable
504-FC	Socket, power cable
PM-705	Speaker, 5 1/4" PM (includes output transformer)
V-83	Vibrator
H310	Knob
H311	Cup washer
C100	.5 MFD generator condenser
R100	Distributor suppressor

DIAL PARTS

H523	Dial Scale Escutcheon, Plastic
PS100	Dial Pointer
T47	Pilot Light
H114	Pilot Light Socket
H203	Pulley, idler
H204	Spring, Dial drive String Tension
H115	String, dial drive

©John F. Rider

Compliments of www.nucow.com

MODEL D-200, Dodge, Plymouth, 1949-1950

DESCRIPTION

Your new Automobile Receiver is a 6-tube (including rectifier) superhetrodyne, designed to operate from the 6-volt storage battery in your car. It is custom-built to mount behind the instrument panel in the place provided for a radio by the automobile manufacturer. It has a self-contained PM oval speaker and covers the frequency range 538 to 1600 KC. Two simple controls are provided for operating the receiver. (See Fig. 1.)

This receiver has been designed with a tuned RF stage and a 3-gang tuning condenser thereby insuring the finest in sensitivity and selectivity. Any standard two or three section whip or "fish pole" antenna will provide good reception of distant or weak stations. The unit is simple to install and requires no electrical adjustment after installation.

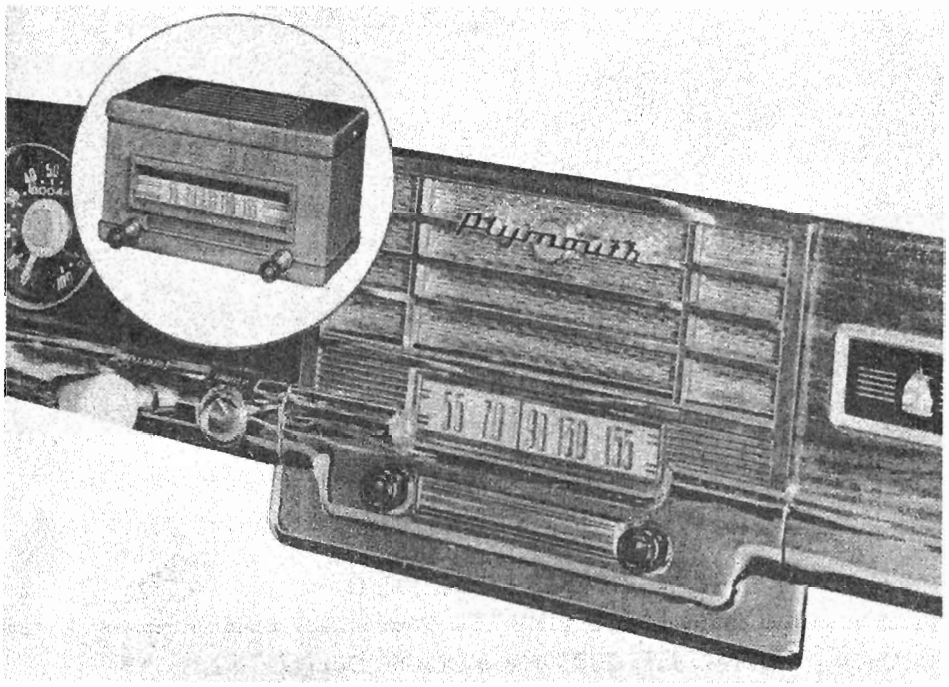

Fig. 1

OPERATION

VOLUME CONTROL KNOB

This knob is located on the left side of the radio. Turning this knob slightly to the right until a slight click is heard will put the radio into operation. Turning this knob further to the right will increase the volume and turning it to the left will decrease the volume. After a station has been selected, the volume control should be adjusted to the required loudness. The volume should never be reduced by detuning the station selector knob.

STATION SELECTOR KNOB

This knob is located on the right side of the radio. This knob should be turned until a desired station has been selected. Adjust this knob very carefully until the station comes in with the most natural tone.

INSTALLATION

PLYMOUTH P18 SPECIAL DELUXE

1. Remove four screws securing Radio Grille in place and remove Radio Grille.
2. Remove dummy plates covering radio dial and control openings.
3. Enlarge holes in radio control cover plate to fit over mounting bushings.
4. Remove knobs, cup washers, hex nuts and washers from control shafts and mounting bushings.
5. Secure two mounting brackets to Radio Grille with 3/8 inch long 10-32 self-tapping screws and cup washers as shown in detail assembly drawing, Fig. 2.
6. Place radio control cover plate over mounting bushings.
7. Position receiver behind Radio Grille so that mounting bushings and shafts protrude through the grille.
8. Attach receiver by replacing washers and hex nuts on mounting bushings.
9. Replace cup washers and knobs over shafts.
10. Secure receiver to mounting brackets with two No. 8 self-tapping wing nut screws.
11. Insert radio with attached grille through front opening on instrument panel.
12. Replace grille mounting screws.
13. Connect battery lead to terminal marked "ACC" on ignition switch.
14. Plug antenna cable into receiver.

©John F. Rider

Compliments of www.nucow.com

MODEL D-200, Dodge,
Plymouth, 1949-1950

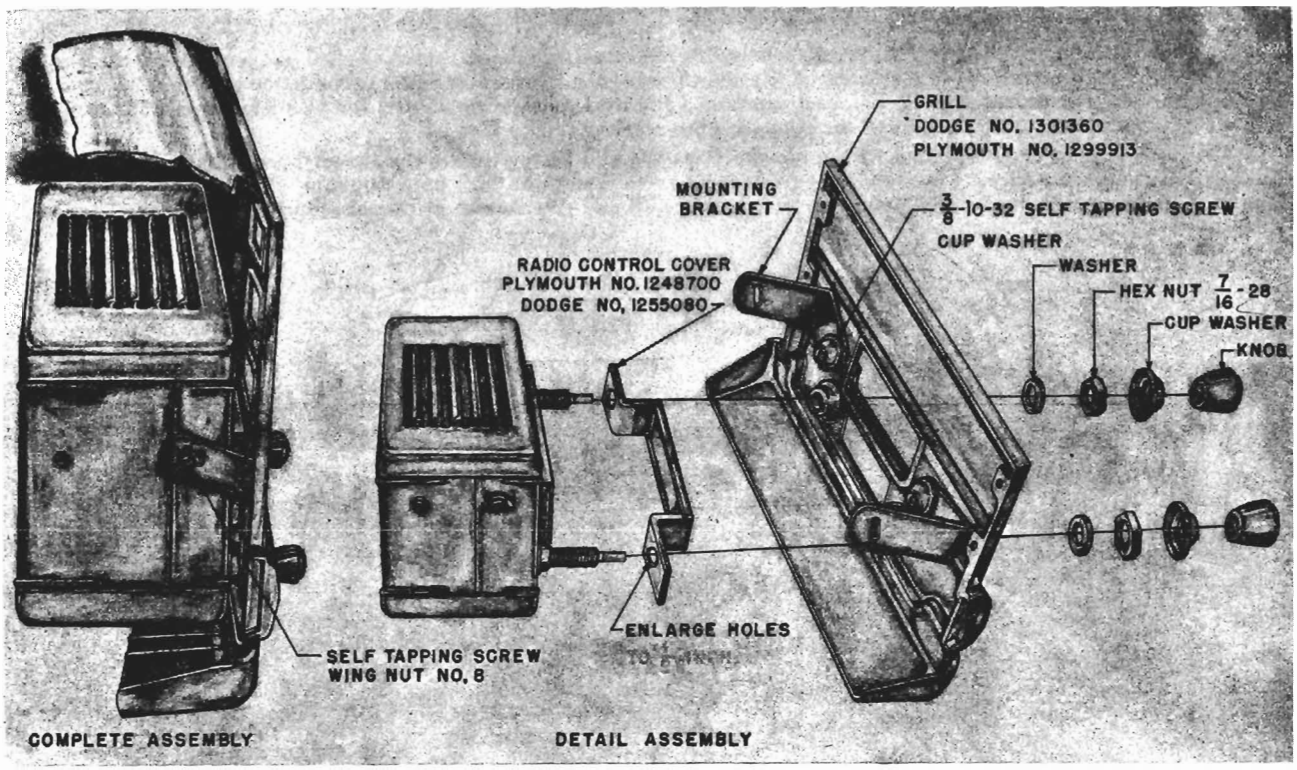

Fig. 2

DODGE "CORONET"

Install in the same manner as outlined for the P18 DeLuxe Plymouth except do not remove radio grille.

PLYMOUTH P17, P18 4-DOOR DELUXE AND P18 CLUB COUPE DELUXE DODGE "WAYFARER" AND "MEADOWBROOK"

These models are not equipped by the car manufacturers with a radio grille or a radio control cover plate.

The following parts must be obtained from any authorized Plymouth or Dodge dealer before an installation can be made in any of these cars.

Plymouth P17, P18 4-Door DeLuxe, P18 Club Coupe DeLuxe
- Radio Grille No. 1299913
- Radio control cover No. 1248700

Dodge "Meadowbrook" or "Wayfarer"
- Radio Grille No. 1301360
- Radio control cover No. 1255080

ACCESSORIES FURNISHED FOR INSTALLATION

MOUNTING PARTS KIT

The following mounting hardware parts are shipped attached to the receiver.
(See detail assembly drawing FIG. 2)

2 Washers
2 7/16-28 hex nuts
2 Cup washers
2 Knobs
2 Mounting Brackets
2 No. 8 self-tapping wing nut screws

An envelope containing additional mounting hardware is supplied with this receiver. It contains the following parts:

2 3/8 10-32 self-tapping screws
2 Cup washers

SUPPRESSION KIT

1 Distributor Suppressor
1 .5 MFD Generator Condenser

©John F. Rider

Compliments of www.nucow.com

MODEL D-200, Dodge, Plymouth, 1949-1950

MOTOR NOISE ELIMINATION

GENERATOR CONDENSER

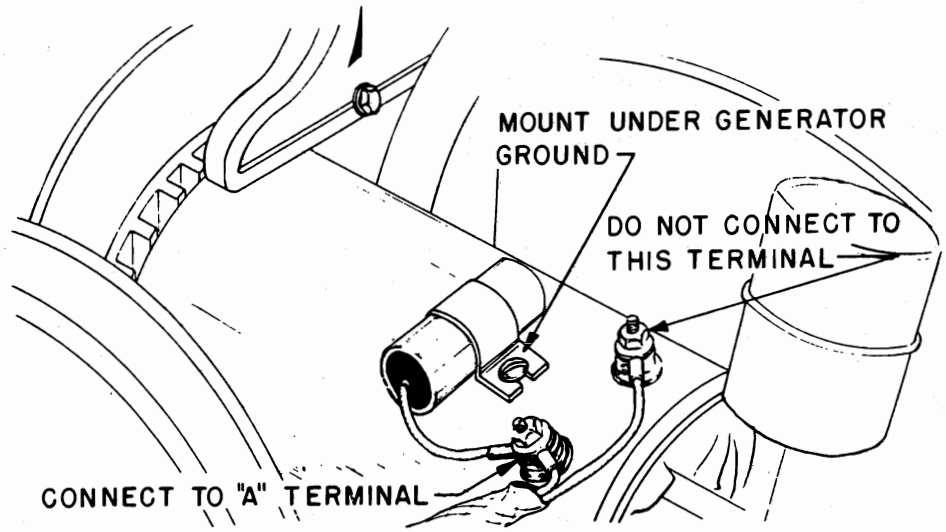

Fig. 3

DISTRIBUTOR SUPPRESSOR

NOTE: 1950 Dodge and Plymouth automobiles do *not* require distributor suppressors.

1949 DODGE AND PLYMOUTH

Remove metal tip from the distributor center tower lead and screw lead into the suppressor. Plug suppressor with attached lead back into distributor head.

The generator condenser and distributor suppressor should eliminate all objectionable motor noise in most cases. If the motor noise persists the following steps should be taken. Check operation of radio as each step is made.

WHEEL STATIC

Wheel static is a form of interference caused by the rotation of the front wheels of the car, and it is, of course, only noticed when the car is in motion. If this form of interference is present, it can be eliminated by installing wheel static collector springs between the inner hub cap and the spindle shaft.

AMMETER CONDENSER

A .5 MFD by-pass condenser should be connected to either side of the ammeter with the ground lug fastened to a good ground nearby.

ELECTRICAL ACCESSORIES

In some cases, it may be found that car accessories such as electric heaters, lighters, automatic relays or gauges, may cause interference while in operation. Proper procedure in such cases is to connect a .5 MFD by-pass condenser from ground to the suspected accessory until the source of interference is found. The condenser then should be permanently mounted in this location.

©John F. Rider

Compliments of www.nucow.com

MODEL D-200, Dodge,
Plymouth, 1949-1950

SERVICE DATA

ELECTRICAL SPECIFICATIONS

Power Supply.....6.3 Volts DC
Current.....5.5 Amp. average
Frequency Range.....538-1600 KC
Speaker.....5¼" PM
Power Output.....2 watts, undistorted
3 watts, maximum
Sensitivity.....2-3 microvolts average for 1 watt output
Selectivity.....40 KC broad at 1000 times signal, at 1000 KC

This receiver contains the following:
1—6BA6—RF Amplifier
1—6BE6—Converter
1—6BA6—I. F. Amplifier
1—6AT6—Detector—AVC—1st Audio
1—6AQ5—Power Output
1—6X4—Rectifier

SERVICE NOTES

Voltage taken from the different points of the circuit to the chassis are measured with volume control in maximum position. all tubes in their sockets, no signal applied, and with a volt meter having a resistance of 20.000 Ohms per volt. These voltages are clearly shown on the voltage chart, (Fig. 4).
All voltages should be measured with an input voltage of 6.3 volts DC.
To check for open by-pass condensers, shunt each condenser with another one having the same capacity and voltage rating which is known to be good until the defective unit is located.

ALIGNING INSTRUCTION

Never attempt any adjustments on this receiver unless it becomes necessary to replace a coil or transformer, or the adjustments have been tampered with in the field. Always make certain that other circuit components, such as tubes, condensers, resistors, etc., are normal before proceeding with realignment.
If realignment is necessary follow the instructions given under the heading "Alignment Procedure". After realignment has been completed repeat the procedure as final check.

INSTRUCTIONS FOR SERVICING RECEIVER COMPONENTS

The novel design of this receiver permits servicing all components without removing the chassis from the case. The top cover (the one with the speaker louvres) can be removed by removing the four (4) screws securing it to the case. This exposes all tube sockets, connectors, resistors and condensers for observation and service.
Removing the bottom cover makes it possible to service tubes, vibrator, and volume control.

ALIGNMENT PROCEDURE

Volume control—Maximum, all adjustments.
No signal applied to antenna.
Power input—6.3 volts.
Connect dummy antenna in series with output lead of signal generator.
Connect ground lead of signal generator to chassis.
Repeat alignment procedure as a final check.

The following equipment is necessary for proper alignment:
Signal generator that will provide the test frequencies as listed, modulated 400 cycles, 30%.
Non-metallic screwdriver.
Output meter. (1.8 volt for 1 watt output.)
Dummy antennas—.1 MFD., 100 MMFD.
For alignment points refer to Schematic Diagram.

Dial Setting	*Generator Frequency*	*Dummy Ant.*	*Generator Connector*	*Trimmer Reference*	*Trimmer Adjustment*	*Trimmer Function*
1) Fully open	455 KC	.1 MFD	6BE6 Grid	T2 Top & bottom	Maximum	Output I.F.
2) Fully open	455 KC	.1 MFD	6BE6 Grid	T1 Top & bottom	Maximum	Input I.F.
3) Fully open	1600 KC	100 MMFD	Ant. lead	CV2	Maximum	Oscillator
4) Tune in signal from generator	1400 KC	100 MMFD	Ant. lead	CV3	Maximum	RF Stage
5) Tune in signal from generator	1400 KC	100 MMFD	Ant. lead	CV1	Maximum	Antenna
6) Tune in signal from generator	600 KC	100 MMFD	Ant. lead	L3	Maximum	RF Stage
7) Tune in signal from generator	600 KC	100 MMFD	Ant. lead	L2	Maximum	Antenna
8) Repeat steps 4 and 5						

©John F. Rider

Compliments of www.nucow.com

PARTS LIST

CONDENSERS

Schematic Diagram Reference	Part No.	Description
C2, C3, C4	C207	.05 MFD 200 volt condenser
C5	CC200	100 MMFD ceramic condenser
C6, C13, C14	CC201	200 MMFD ceramic condenser
C7	C203	.002 MFD 400 volt condenser
C8, C9	C206	.01 MFD 600 volt condenser
C10, C11	C209	.5 MFD 100 volt condenser
C12	C205	.008 MFD 1600 volt condenser
CE-86	CE-86	20 MFD 350 volt electrolytic condenser 20 MFD 350 volt electrolytic condenser 20 MFD 25 volt electrolytic condenser
CV-200	CV-200	3 section variable tuning condenser

RESISTORS

R1	R309	1 megohm ½ watt 20% resistor
R2	R306	20K ohm ½ watt 20% resistor
R3	R305	2K ohm ½ watt 20% resistor
R4	R310	2 megohm ½ watt 20% resistor
R5	R311	10 megohm ½ watt 20% resistor
R6	R307	250K ohm ½ watt 20% resistor
R7	R308	500K ohm ½ watt 20% resistor
R8	R303	330 ohm ½ watt 20% resistor
R9	R313	20K ohm 2 watt 20% resistor
R10, R11	R301	100 ohm ½ watt 20% resistor
R12	R312	1K ohm 1 watt 20% resistor
RV-200	RV-200	Volume control ¾ megohm with switch

COILS AND TRANSFORMERS

L1-C1	L200	Motor noise elimination unit
L2	57FB-3	Antenna Coil
L3	57FB-4	RF coil
L4	L201	RF Oscillator coil
L5	L202	Choke, vibrator hash
L6	L203	Choke, "A" line
T1	1655-16	1st IF transformer
T2	1655-16	2nd IF transformer
T3		Output transformer (Part of speaker not furnished separately)
T4	TV-86 or TV-86A	Vibrator transformer

BOTTOM VIEW OF CHASSIS

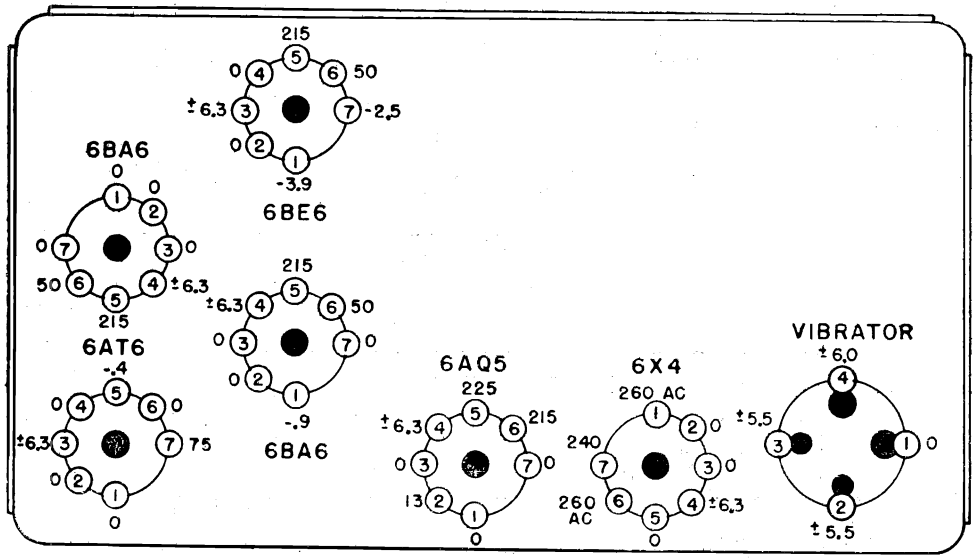

FRONT OF CHASSIS

Fig. 4 SOCKET VOLTAGES

DIAL PARTS

D200	Dial Scale
PS200	Dial Pointer
DS200	Drive shaft assembly
H201	Grommet, rubber drive
T51	Pilot light
H202	Pilot light socket
H203	Pulley, idler
H204	Spring, Dial Drive String Tension
H205	String, Dial Drive

MISCELLANEOUS

A200	"A" lead assembly
H206	Case (less covers)
H207	Clip, anti-rattle
H208	Clip, coil mounting
H209	Cover, bottom case
H210	Cover, top case (with speaker louvres)
A201	Fuse, 15 Amp.
H211	Grommet, rubber, gang mounting
H212	Receptacle, antenna cable
PM-200	Speaker 4" x 6" PM (includes output transformer)
V-83	Vibrator

©John F. Rider
Compliments of www.nucow.com

MODEL D-200, Dodge, Plymouth, 1949-1950

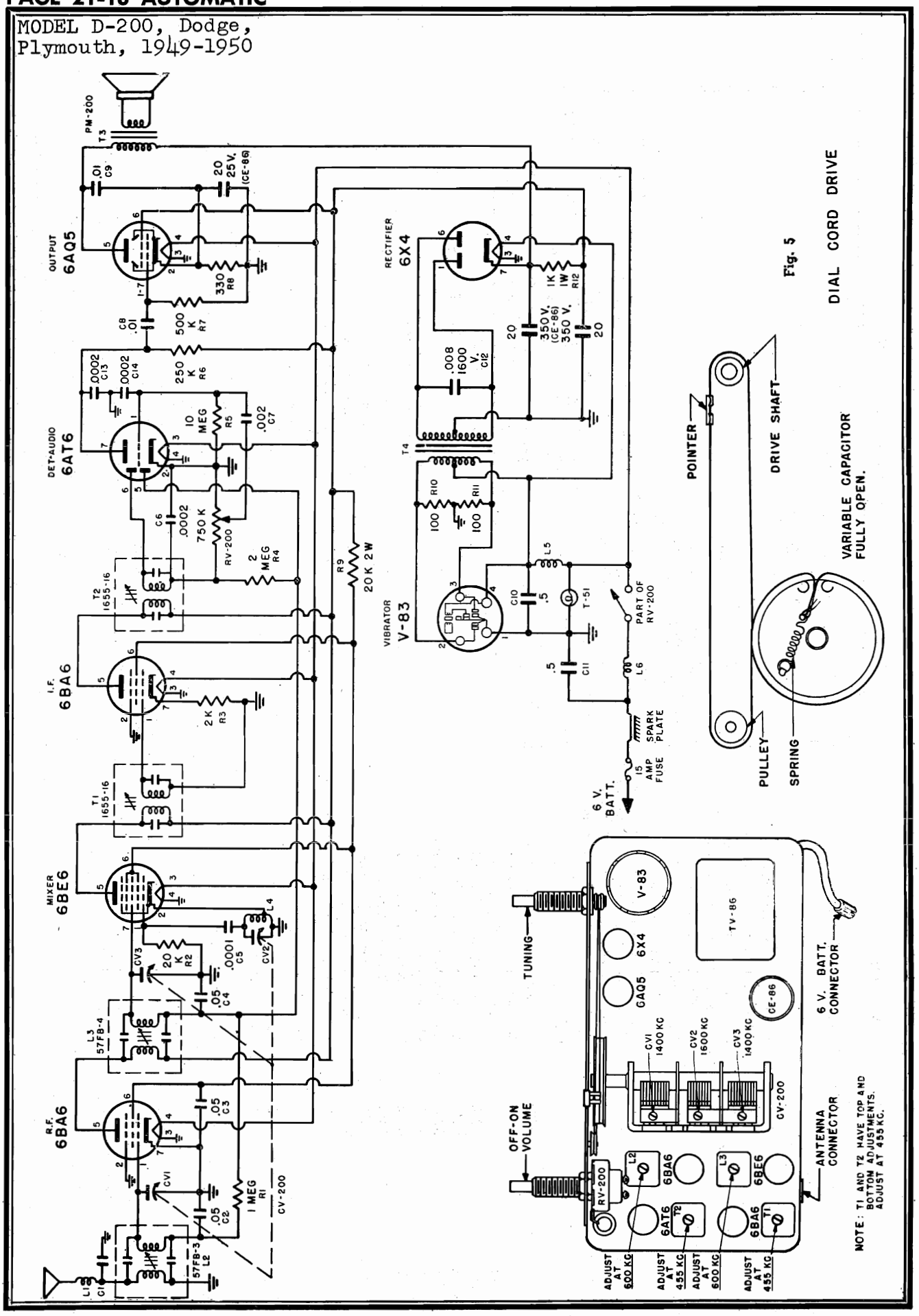

Fig. 5 DIAL CORD DRIVE

©John F. Rider

Compliments of www.nucow.com

MODEL C-300,
Chevrolet, 1949-1950

DESCRIPTION

Your new Automobile Receiver is a 6-tube (including rectifier) superhetrodyne, designed to operate from the 6-volt storage battery in your car. It is custom-built to mount behind the instrument panel in the place provided for a radio by the automobile manufacturer. It features a novel two-piece construction and covers the frequency range 538 to 1600 KC. Two simple controls are provided for operating the receiver.

This receiver has been designed with a tuned RF stage and a 3-gang tuning condenser thereby insuring the finest in sensitivity and selectivity. Any standard two or three section whip or "fish pole" antenna will provide good reception of distant or weak stations. The unit is simple to install and requires no electrical adjustment after installation.

INSTALLATION

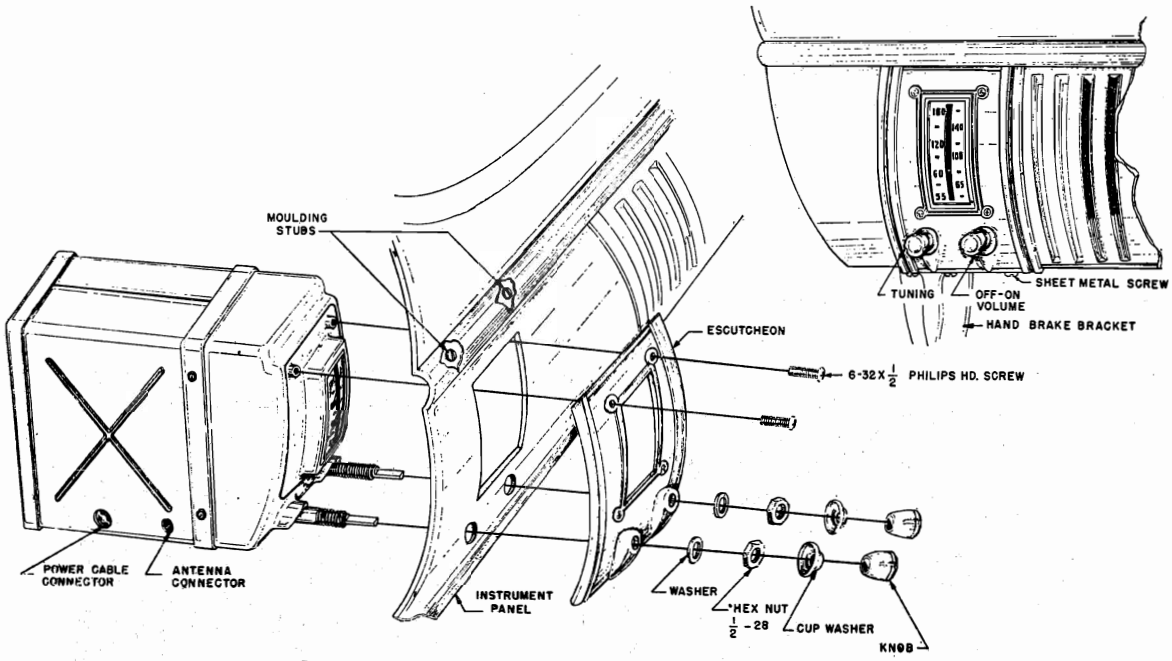

R.F. TUNING UNIT DETAIL MOUNTING ASSEMBLY

Fig. 1

R. F. TUNING UNIT

1. Loosen nuts on the two moulding studs located behind the instrument panel cover plate.
2. Remove sheet metal screw from the lower edge of the instrument panel cover plate and the two screws and washers attaching the hand brake to the instrument panel. Keep these parts.
3. Remove instrument panel cover plate and discard.
4. Tighten nuts on the two moulding studs located behind the instrument panel cover plate.
5. Drop vent controls by removing screws, lockwashers, and flat washers securing these controls to the instrument panel. This will facilitate installation of both receiver units. Save parts removed.
6. Install R.F. Tuning Unit behind instrument panel so that mounting bushings and tuningshafts protrude through the instrument panel.
7. Slide plastic escutcheon over mounting bushings and secure with flat washers, nuts, cup washers, and knobs as shown in Fig. 1
8. Secure top part of plastic escutcheon to R.F. Tuning Unit with two No. 6-32 x ½" long Philips Head screws.

©John F. Rider

Compliments of www.nucow.com

MODEL C-300,
Chevrolet, 1949-1950

POWER SUPPLY UNIT

1. Insert a thin blade screwdriver or a flat strip of metal through the Radio Grille and slit fiberboard Radio Grille screen. Reach in back of Radio Grille and remove screen by grasping slit edge. Discard fiberboard screen.
2. Remove 10-32 nuts and washers from the moulding studs behind the Radio Grille.
3. Remove 10-32 nuts screws, and washers securing the lower tabs of the Radio Grille to the instrument panel.
4. Install Power Supply Unit behind Radio Grille and position into place so that holes in top of unit slide over moulding studs as shown in Fig. 2.

NOTE: It may be more convenient, in car models with air conditioner heaters, to remove the vibrator before installing this unit. The vibrator can be replaced after the power unit is mounted.

5. Replace 10-32 nuts and washers on moulding studs.
6. Replace lower grille tab 10-32 mounting screws, nuts, and washers so that screws secure the lower grille tabs and Power Supply Unit to the instrument panel.
7. Connect cable from Power Supply Unit to R.F. Tuning Unit.
8. Replace vent controls.
9. Replace screws and washers securing hand brake.

Connect battery lead to terminal on Ignition Switch.

Plug Antenna cable into receiver.

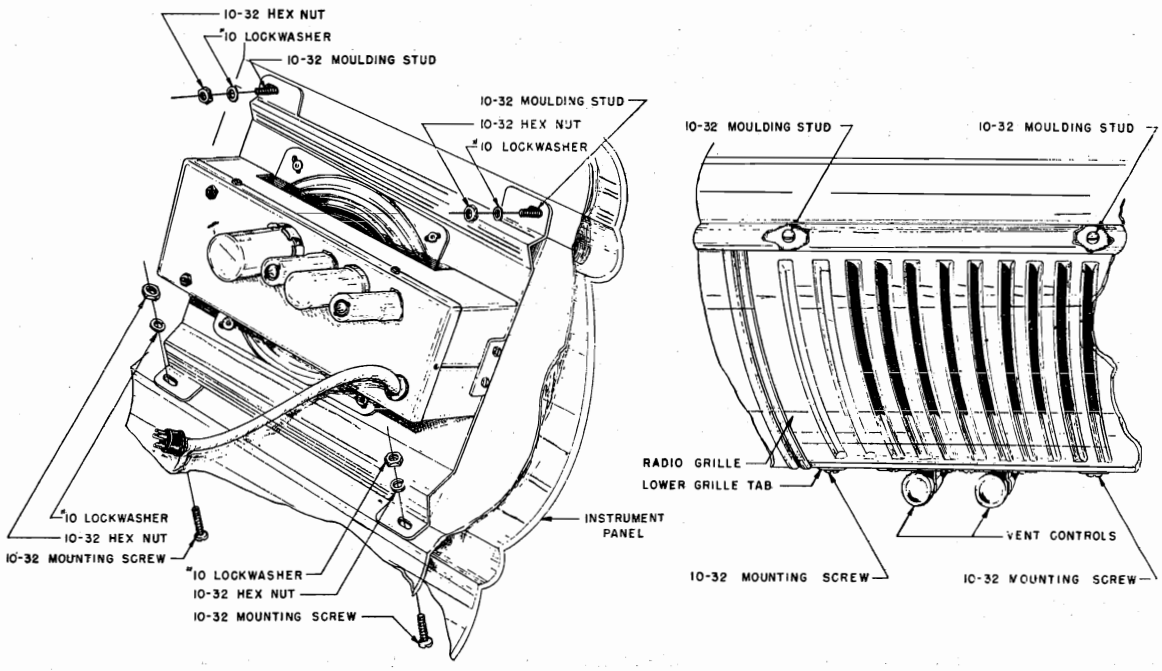

POWER SUPPLY UNIT DETAIL MOUNTING ASSEMBLY

Fig. 2

OPERATION

VOLUME CONTROL KNOB

This knob is located on the right side of the radio. Turning this knob slightly to the right until a slight click is heard will put the radio into operation. Turning this knob further to the right will increase the volume and turning it to the left will decrease the volume. After a station has been selected, the volume control should be adjusted to the required loudness. The volume should never be reduced by detuning the station selector knob.

STATION SELECTOR KNOB

This knob is located on the left side of the radio. This knob should be turned until a desired station has been selected. Adjust this knob very carefully until the station comes in with the most natural tone.

©John F. Rider

Compliments of www.nucow.com

MODEL C-300,
Chevrolet, 1949-1950

MOTOR NOISE ELIMINATION

SUPPRESSION KIT

A suppression kit is shipped with this receiver. It contains the following parts:
1 Generator Condenser.
1 Distributor Suppressor.

GENERATOR CONDENSER

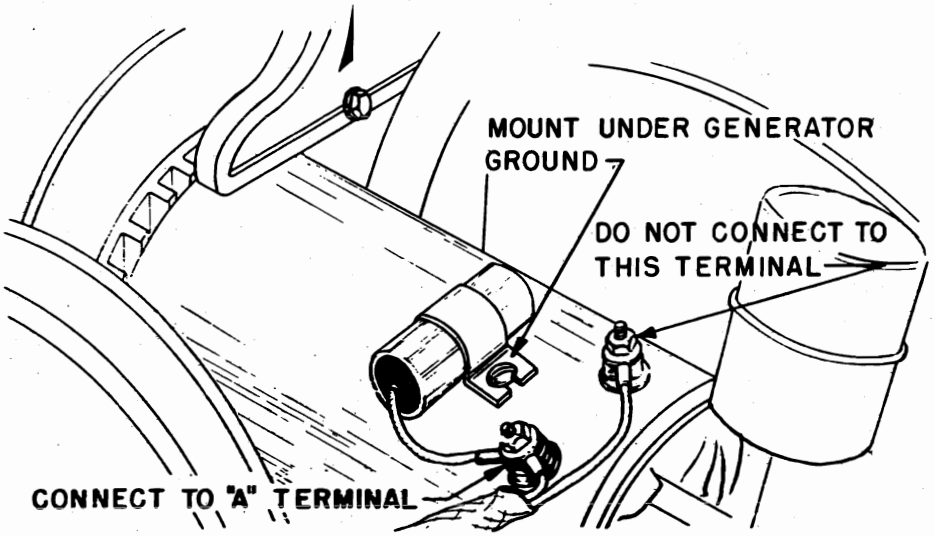

Fig. 3

DISTRIBUTOR SUPPRESSOR

Disconnect the center lead in the distributor head of the motor. Cut lead approximately 2 inches back from metal tip end. Screw suppressor into cut end of long lead. Screw cut end of short lead into suppressor. Plug lead, with attached suppressor, back into distributor head.

WHEEL STATIC

Wheel static is a form of interference caused by the rotation of the front wheels of the car, and it is, of course, only noticed when the car is in motion. If this form of interference is present, it can be eliminated by installing wheel static collector springs between the inner hub cap and the spindle shaft.

AMMETER CONDENSER

A .5 MFD by-pass condenser should be connected to either side of the ammeter with the ground lug fastened to a good ground nearby.

ELECTRICAL ACCESSORIES

In some cases, it may be found that car accessories such as electric heaters, lighters, automatic relays or gauges, may cause interference while in operation. Proper procedure in such cases is to connect a .5 MFD by-pass condenser from ground to the suspected accessory until the source of interference is found. The condenser then should be permanently mounted in this location.

©John F. Rider

Compliments of www.nucow.com

MODEL C-300,
Chevrolet, 1949-1950

SERVICE DATA
ELECTRICAL SPECIFICATIONS

Power Supply	6.3 Volts DC
Current	5.5 Amp. average
Frequency Range	538-1600 KC
Speaker	5¼" PM
Power Output	2 watts, undistorted
	3 watts, maximum
Sensitivity	2-3 microvolts average for 1 watt output
Selectivity	40 KC broad at 1000 times signal, at 1000 KC

This receiver contains the following:
1—6BA6—RF Amplifier
1—6BE6—Converter
1—6BA6—I. F. Amplifier
1—6AT6—Detector—AVC—1st Audio
1—6AQ5—Power Output
1—6X4—Rectifier

SERVICE NOTES

Voltage taken from the different points of the circuit to the chassis are measured with volume control in maximum position, all tubes in their sockets, no signal applied, and with a volt meter having a resistance of 20,000 Ohms per volt. These voltages are clearly shown on the voltage chart, (Fig. 4).
All voltages should be measured with an input voltage of 6.3 volts DC.
To check for open by-pass condensers, shunt each condenser with another one having the same capacity and voltage rating which is known to be good until the defective unit is located.

ALIGNING INSTRUCTION

Never attempt any adjustments on this receiver unless it becomes necessary to replace a coil or transformer, or the adjustments have been tampered with in the field. Always make certain that other circuit components such as tubes, condensers, resistors, etc. are normal before proceeding with realignment.

If realignment is necessary follow the instructions given under the heading "Alignment Procedure". After realignment has been completed repeat the procedure as final check.

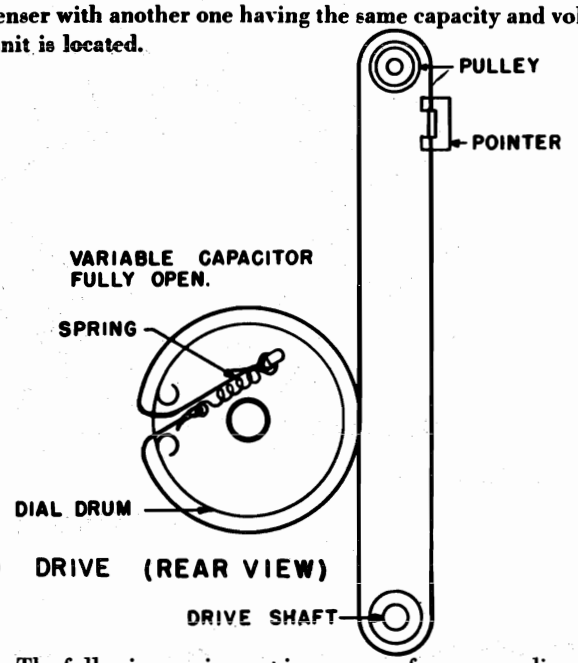

Fig. 4 DIAL CORD DRIVE (REAR VIEW)

ALIGNMENT PROCEDURE

Volume control—Maximum, all adjustments.
No signal applied to antenna.
Power input—6.3 volts.
Connect dummy antenna in series with output lead of signal generator.
Connect ground lead of signal generator to chassis.
Repeat alignment procedure as a final check.

The following equipment is necessary for proper alignment:
Signal generator that will provide the test frequencies as listed, modulated 400 cycles, 30%.
Non-metallic screwdriver.
Output meter. (1.8 volt for 1 watt output.)
Dummy antennas—.1 MFD., 100 MMFD.
For alignment points refer to Schematic Diagram.

Dial Setting	*Generator Frequency*	*Dummy Ant.*	*Generator Connector*	*Trimmer Reference*	*Trimmer Adjustment*	*Trimmer Function*
1) Fully open	455 KC	.1 MFD	6BE6 Grid	T1 Top & bottom	Maximum	Output I.F.
2) Fully open	455 KC	.1 MFD	6BE6 Grid	T2 Top & bottom	Maximum	Input I.F.
3) Fully open	1600 KC	100 MMFD	Ant. lead	CV2	Maximum	Oscillator
4) Tune in signal from generator	1400 KC	100 MMFD	Ant. lead	CV3	Maximum	RF Stage
5) Tune in signal from generator	1400 KC	100 MMFD	Ant. lead	CV1	Maximum	Antenna
6) Tune in signal from generator	600 KC	100 MMFD	Ant. lead	L3	Maximum	RF Stage
7) Tune in Signal from generator	600 KC	100 MMFD	Ant. lead	L2	Maximum	Antenna
8) Repeat steps 4 and 5						

©John F. Rider

Compliments of www.nucow.com

PARTS LIST

CONDENSERS

Schematic Diagram Reference	*Part No.*	*Description*
C2, C3, C6, C9	C207	.05 MFD 200 volt condenser
C4, C15	C209	.5 MFD 100 volt condenser
C7	CC200	100 MMFD ceramic condenser
C8	C210	.1 MFD 400 volt condenser
C10, C12	CC201	200 MMFD ceramic condenser
C13, C16	C206	.01 MFD 600 volt condenser
C14	C205	.008 MFD 1600 volt condenser
C11	C211	.002 MFD 400 volt condenser
CE-86	CE-86	20 MFD 350 volt electrolytic condenser 20 MFD 350 volt electrolytic condenser 20 MFD 25 volt electrolytic condenser
CV1-CV2-CV3	CV-300	3 section variable tuning

RESISTORS

R1	R309	1 megohm ½ watt 20% resistor
R2	R306	20K ohm ½ watt 20% resistor
R3	R314	1.5K ohm ½ watt 20% resistor
R4	RV-300	Volume control ¾ megohm with switch
R5	R310	2 megohm ½ watt 20% resistor
R6	R311	10 megohm ½ watt 20% resistor
R7	R307	250K ohm ½ watt 20% resistor
R8	R313	20K ohm 2 watt 20% resistor
R9, R10	R301	100 ohm ½ watt 20% resistor
R11	R312	1K ohm 1 watt 20% resistor
R12	R308	500K ohm ½ watt 20% resistor
R13	R303	330 ohm ½ watt 20% resistor

COILS AND TRANSFORMERS

L1-C1	L200	Motor noise elimination unit
L2	57FB-3	Antenna coil
L3	57FB-4	R.F. coil
L4	L201	R.F. oscillator coil
L5	L203	Choke, "A" line
L6	L202	Choke, vibrator hash
T1	1655-16	2nd IF transformer
T2	1655-16	1st IF transformer
T3	TV-100 or 318V-2	Vibrator transformer
T4		Output transformer (Part of speaker not furnished separately)

DIAL PARTS

D300	Dial Scale
PS300	Dial Pointer
DS300	Drive Shaft Assembly
H201	Grommet, rubber drive
T51	Pilot Light
H214	Pilot Light Socket
H203	Pulley, idler
H204	Spring, Dial drive String Tension
H215	String, dial drive

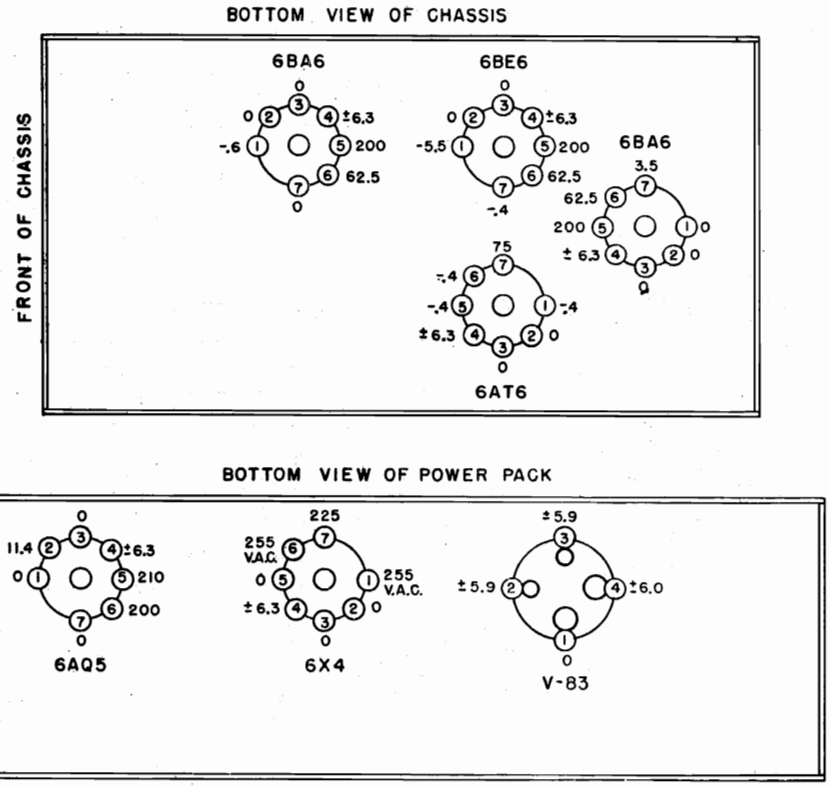

Fig. 5 SOCKET VOLTAGES

MISCELLANEOUS

A300	"A" lead assembly
H301	Case, less covers for Power Supply Unit
H300	Case, complete with covers for R.F. tuning unit
H207	Clip, Anti-rattle
H208	Clip, coil mounting
H302	Cover, power supply unit mounting (with speaker louvres)
A201	Fuse 15 Amp.
504PC-300	Power Cable Assembly (complete with plug)
H212	Receptacle, Antenna cable
504-FC	Socket, power cable
PM-705	Speaker, 5¼" PM (includes output transformer)
V-83	Vibrator
H310	Knob
H311	Cup washer
H312	Plastic Escutcheon

©John F. Rider
Compliments of www.nucow.com

MODEL C-300,
Chevrolet, 1949-1950

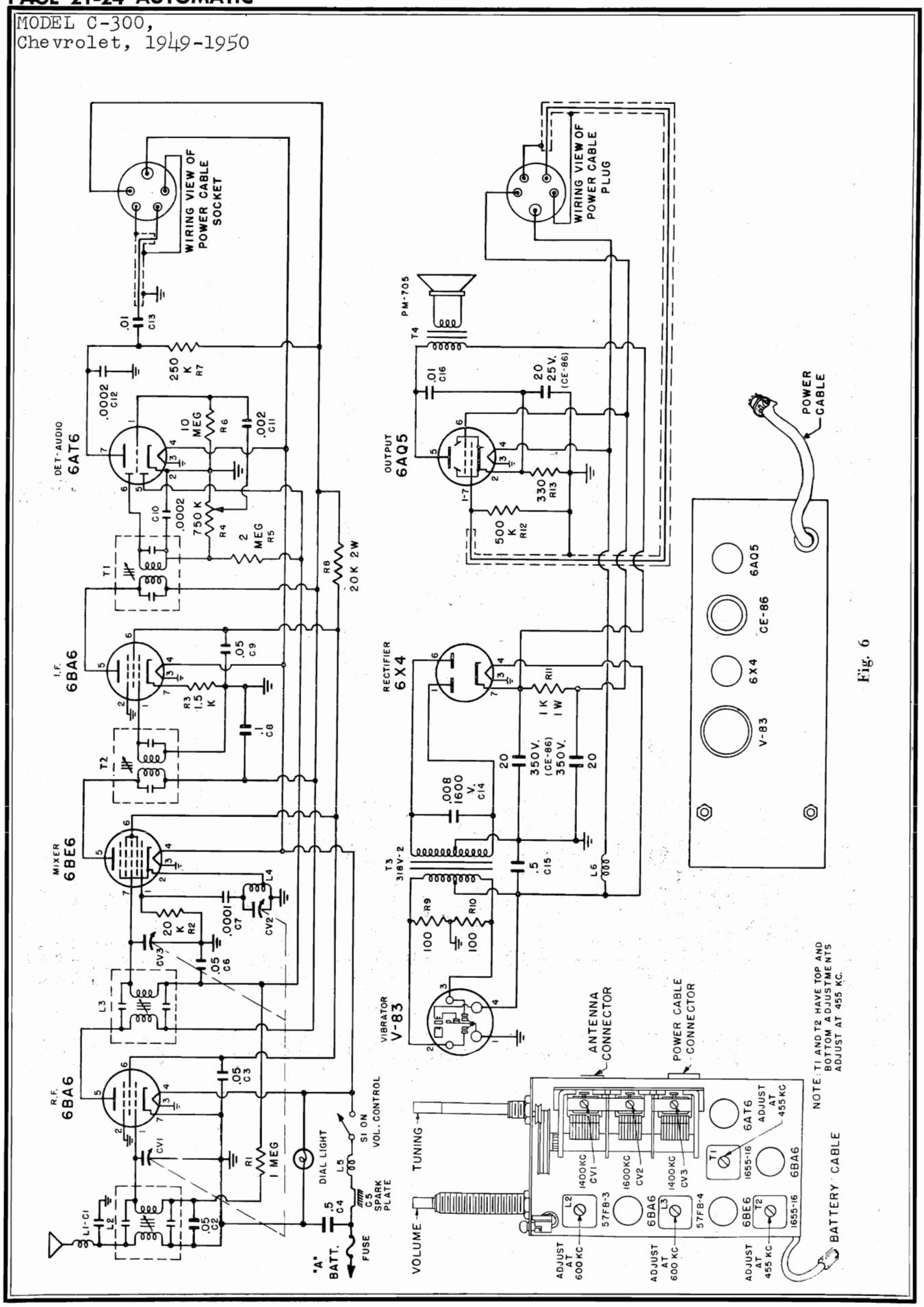

Fig. 6

© John F. Rider

Compliments of www.nucow.com

MODEL F-100,
Ford, 1949-1950

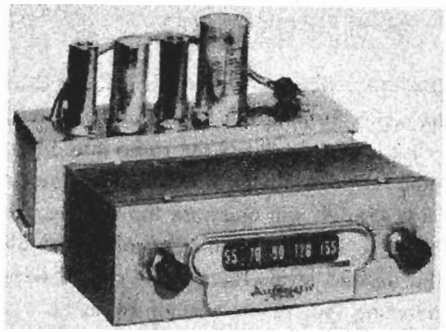

SCHEMATIC DIAGRAM REF. NO.	PART NO.	DESCRIPTION
		CONDENSERS
C2, C3, C5	C207	.05 MFD 200 volt condenser.....
C4, C12	C209	.5 MFD 100 volt condenser.....
C6	CC200	100 MMFD ceramic condenser...
C7, C9	CC201	200 MMFD ceramic condenser...
C8	C203	.002 MFD 400 volt condenser....
C10, C13	C206	.01 MFD 400 volt condenser.....
C11	C205	.008 MFD 1600 volt condenser...
CE-86	CE-86	20 MFD 350 volt electrolytic condenser.....
		20 MFD 350 volt electrolytic condenser.....
		20 MFD 25 volt electrolytic condenser.....
CV1-CV2-CV3	CV-100A	3 section variable.....
		RESISTORS
R1	R309	1 megohm ½ watt 20% resistor..
R2, R14	R303	330 ohm ½ watt 20% resistor....
R3	R306	20K ohm ½ watt 20% resistor....
R4	R314	1.5K ohm ½ watt 20% resistor...
R5	RV-100	Volume control ¾ megohm with switch.....
R6	R310	2 megohm ½ watt 20% resistor..
R7	R311	10 megohm ½ watt 20% resistor.
R8	R313	20K ohm 2 watt 20% resistor....
R9	R307	250K ohm ½ watt 20% resistor..
R10, R11	R301	100 ohm ½ watt 20% resistor....
R12	R312	1K ohm 1 watt 20% resistor.....
R13	R308	500K ohm ½ watt 20% resistor..
		COILS AND TRANSFORMERS
L1-C1	L200	Motor noise elimination unit.....
L2	15053 or 57FB-3	Antenna coil.....
L3	15054 or 57FB-4	R.F. coil.....
L4	L201	R. F. oscillator coil.....
L5	L203	Choke "A" line.....
L6	L202	Choke, vibrator hash.....
T2	14977 or 1655-16	2nd IF transformer.....
T1	14977 or 1655-16	1st IF transformer.....
T3	TV-100 or 318V-2	Vibrator transformer.....
T4		Output transformer (Part of speaker not furnished separately)....

DESCRIPTION

Your new Automobile Receiver is a 6-tube (including rectifier) superheterodyne, designed to operate from the 6-volt storage battery in your car. It is custom-built to mount behind the instrument panel in the place provided for a radio by the automobile manufacturer: It has a self-contained PM speaker and covers the frequency range 538 to 1600 KC.

This receiver has been designed with a tuned RF stage and a 3-gang tuning condenser thereby insuring the finest in sensitivity and selectivity. Any standard two or three section whip or "fish pole" antenna will provide good reception. The unit is simple to install and requires no electrical adjustment after installation.

	DIAL PARTS
D100	Dial Scale Escutcheon, Plastic.....
PS100	Dial Pointer.....
T47	Pilot Light.....
H114	Pilot Light Socket.....
H203	Pulley, idler.....
H204	Spring, Dial drive String Tension.....
H115	String, dial drive.....
	MISCELLANEOUS
A300	"A" lead assembly.....
H301	Case, less covers for Power Supply Unit..
H100	Case, complete with covers for R.F. tuning unit.....
H207	Clip, Anti-rattle.....
H208	Clip, coil mounting.....
H102	Cover, power supply unit mounting (with speaker louvres).....
A201	Fuse 15 Amp.....
504PC-300	Power Cable Assembly (complete with plug).....
H212	Receptacle, Antenna cable.....
504-FC	Socket, power cable.....
PM-705	Speaker, 5¼" PM (includes output transformer).....
V-83	Vibrator.....
H310	Knob.....
H311	Cup washer.....
H113	7/16—28 Hex nut.....
C100	.5 MFD generator condenser.....
R100	Distributor suppressor.....

©John F. Rider

Compliments of www.nucow.com

MODEL F-100,
Ford, 1949-1950

OPERATION

VOLUME CONTROL KNOB — This knob is located on the left side of the radio. Turning this knob slightly to the right until a slight click is heard will put the radio into operation. Turning this knob further to the right will increase the volume and turning it to the left will decrease the volume. After a station has been selected, the volume control should be adjusted to the desired level. The volume should never be reduced by detuning the station selector knob.

STATION SELECTOR KNOB — This knob is located on the right side of the radio. This knob should be turned until a desired station has been selected. Adjust this knob very carefully until the station comes in with the most natural tone. Add a zero to the dial readings to obtain the frequency in kilocycles.

INSTALLATION

1. Remove two speed nuts securing radio opening cover plate to instrument panel.

2. Remove cover plate.

3. Place speaker and power pack unit over four threaded stud bolts located on the underside of the instrument panel. (Position power pack unit so that power cable is located on the left hand side.) See Fig. 1.

4. Secure power pack into position with four 8-32 nuts and washers supplied in kit of mounting hardware.

5. Remove knobs, cup washers and hex mounting nuts from tuning units. *Do not remove escutcheon.*

6. Place tuning unit behind instrument panel so that mounting bushings and shafts protrude through the front panel.

7. Attach tuning unit with a hex nut on each mounting bushing.

8. Replace cup washers, grommets and knobs over shafts.

9. Secure a supporting bracket (2 supplied in kit of hardware) to each side of the power pack unit by means of two No. 8 self-tapping screws. Use end of supporting bracket with round hole. If more convenient, these brackets may be attached before power pack unit is positioned in place.

10. Swing supporting brackets so that slotted holes are in line with the holes on each side of the tuning unit.

11. Secure to tuning unit with two No. 8 self-tapping screws.

12. Insert power cable plug into socket on rear of tuning unit.

13. Plug antenna cable into tuning unit.

14. Secure power cable under cable clamp and tighten clamp screw.

15. Connect "A" lead to accessory terminal marked RAD. GA, on the ignition switch.

ACCESSORIES FURNISHED FOR INSTALLATION

MOUNTING PARTS KIT

The following mounting hardware parts are shipped attached to the receiver. (See detail assembly drawing Fig. 1).

- 2 7/16-28 hex nuts
- 2 Cup washers
- 2 Grommets
- 2 Knobs
- 1 Cable clamp

An envelope containing additional mounting hardware is supplied with this receiver. It contains the following parts:

- 2 Supporting brackets
- 4 No. 8 self-tapping screws
- 4 8-32 nuts
- 4 No. 8 washers

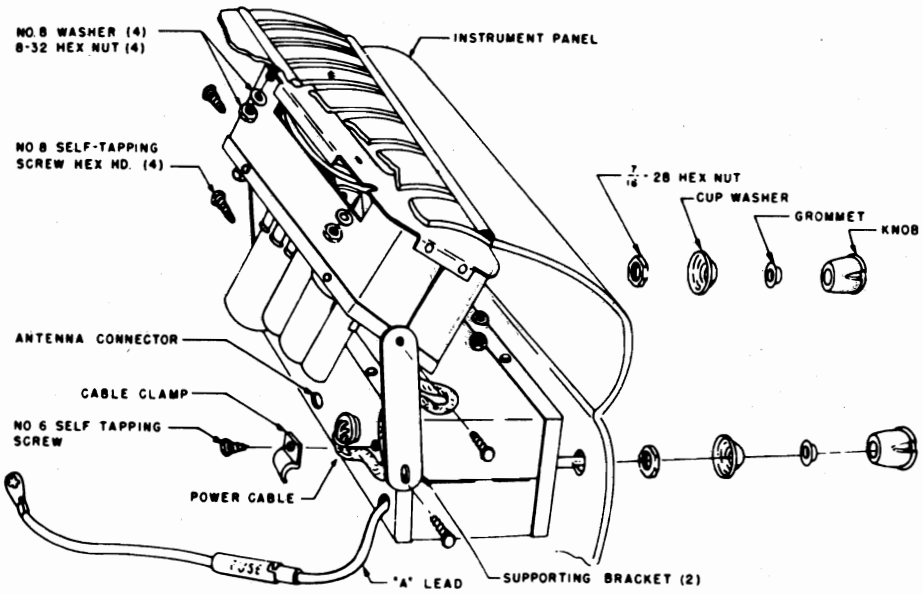

FIG. 1 DETAIL MOUNTING ASSEMBLY

©John F. Rider

Compliments of www.nucow.com

MODEL F-100,
Ford, 1949-1950

MOTOR NOISE ELIMINATION

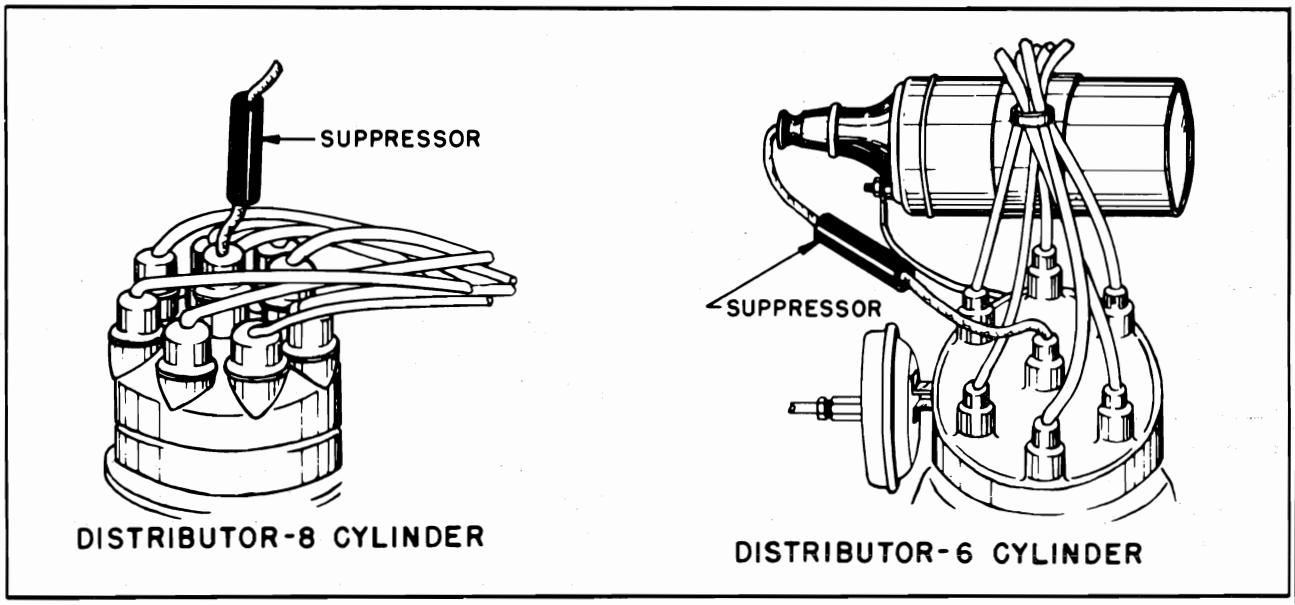

FIG. 2 DISTRIBUTOR SUPPRESSOR

SUPPRESSION KIT

A suppression kit is shipped with this receiver. It contains the following parts:

1 Generator Condenser

1 Distributor suppressor

DISTRIBUTOR SUPPRESSOR

Disconnect high tension wire that runs from the ignition coil to the center hole of the distributor head. Cut lead one and one-half inches back from metal tip end for 8 cylinder Ford or two and one-half inches back for 6 cylinder Ford. Screw suppressor into cut end of long lead. Screw cut end of short lead into suppressor. Plug lead with attached suppressor, back into distributor head.

GENERATOR CONDENSER

Loosen the top assembly bolt from the rear end plate of the generator. DO NOT REMOVE. Mount .5MFD generator condenser under this bolt. Tighten bolt and connect condenser lead to the armature terminal of the generator.

The generator condenser and distributor suppressor should eliminate all objectionable motor noise in most cases. If the motor noise persists the following steps should be taken. Check operation of radio as each step is made.

WHEEL STATIC

Wheel static is a form of interference caused by the rotation of the front wheels of the car, and it is, of course, only noticed when the car is in motion. If this form of interference is present, it can be eliminated by installing wheel static collector springs between the inner hub cap and the spindle shaft.

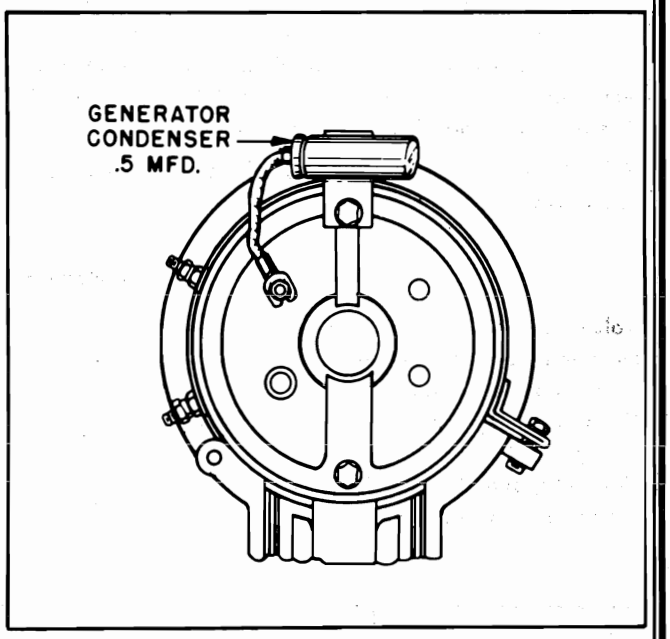

FIG. 3 GENERATOR CONDENSER

AMMETER CONDENSER

A .5 MFD by-pass condenser should be connected to either side of the ammeter with the ground lug fastened to a good ground nearby.

ELECTRICAL ACCESSORIES

In some cases, it may be found that car accessories such as electric heaters, lighters, automatic relays or gauges, may cause interference while in operation. Proper procedure in such cases is to connect a .5 MFD by-pass condenser from ground to the suspected accessory until the source of interference is found. The condenser then should be permanently mounted in this location.

©John F. Rider

Compliments of www.nucow.com

MODEL F-100,
Ford, 1949-1950

ELECTRICAL SPECIFICATIONS

Power Supply .....6.3 Volts DC
Current .....5.5 Amp. average
Frequency Range .....538-1600 KC
Speaker .....5¼" PM 3.2 Ohm V.C.
Power Output .....2 watts, undistorted
3 watts, maximum
Sensitivity ..... 2-3 microvolts average for 1 watt output
Selectivity .. 40 KC broad at 1000 times signal, at 1000 KC
This receiver contains the following:
1 — 6BA6 — RF Amplifier
1 — 6BE6 — Converter
1 — 6BA6— I. F. Amplifier
1 — 6AT6 — Detector — AVC — 1st Audio
1 — 6AQ5 — Power Output
1 — 6X4 — Rectifier

SERVICE NOTES

Voltage taken from the different points of the circuit to the chassis are measured with volume control in maximum position, all tubes in their sockets, no signal applied, and with a volt meter having a resistance of 20,000 Ohms per volt. These voltages are clearly shown on the voltage chart.

All voltages should be measured with an input voltage of 6.3 volts DC.

To check for open by-pass condensers, shunt each condenser with another one having the same capacity and voltage rating which is known to be good until the defective unit is located.

ALIGNING INSTRUCTION

Never attempt any adjustments on this receiver unless it becomes necessary to replace a coil or transformer, or the adjustments have been tampered with in the field. Always make certain that other circuit components, such as tubes, condensers, resistors, etc., are normal before proceeding with realignment.

If realignment is necessary follow the instructions given under the heading "Alignment Procedure." After realignment has been completed repeat the procedure as final check.

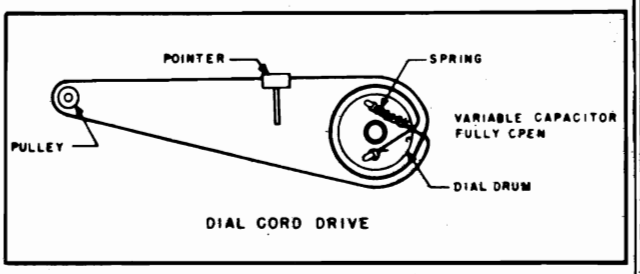

FIG. 4 DIAL CORD DRIVE

ALIGNMENT PROCEDURE

Volume control — Maximum all adjustments.
No signal applied to antenna.
Power input — 6.3 volts.
Connect dummy antenna in series with output lead of signal generator.
Connect ground lead of signal generator to chassis.
Repeat alignment procedure as a final check.

The following equipment is necessary for proper alignment:
Signal generator that will provide the test frequencies as listed, modulated 400 cycles, 30%.
Non-metallic screwdriver.
Output meter. (1.8 volt for 1 watt output.)
Dummy antennas — .1 MFD., 100 MMFD.
For alignment points refer to Schematic Diagram.

DIAL SETTING	GENERATOR FREQUENCY	DUMMY ANT.	GENERATOR CONNECTION	TRIMMER REFERENCE	TRIMMER ADJUSTMENT	TRIMMER FUNCTION
1) Fully open	455 KC	.1 MFD	6BE6 Grid	T2 Top & bottom	Maximum	Output I.F.
2) Fully open	455 KC	.1 MFD	6BE6 Grid	T1 Top & bottom	Maximum	Input I.F.
3) Fully open	1600 KC	100 MMFD	Ant. lead	CV2	Maximum	Oscillator
4) Tune in signal from generator	1400 KC	100 MMFD	Ant. lead	CV3	Maximum	RF Stage
5) Tune in signal from generator	1400 KC	100 MMFD	Ant. lead	CV1	Maximum	Antenna
6) Tune in signal from generator	600 KC	100 MMFD	Ant. lead	L3	Maximum	RF Stage
7) Tune in signal from generator	600 KC	100 MMFD	Ant. lead	L2	Maximum	Antenna
8) Repeat steps 4 and 5						

©John F. Rider

Compliments of www.nucow.com

MODEL F-100,
Ford, 1949-1950

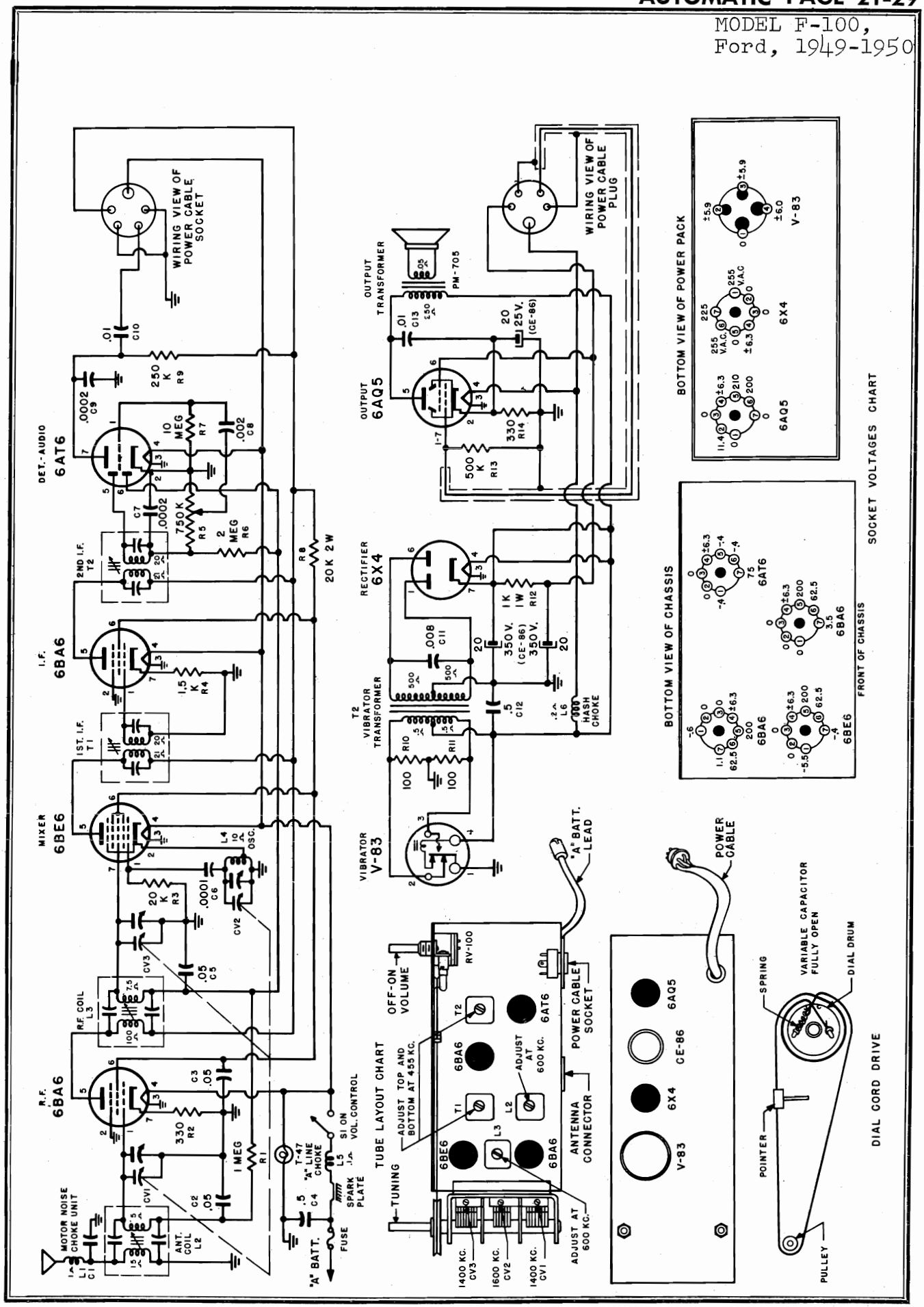

©John F. Rider

Compliments of www.nucow.com

MODEL M-90

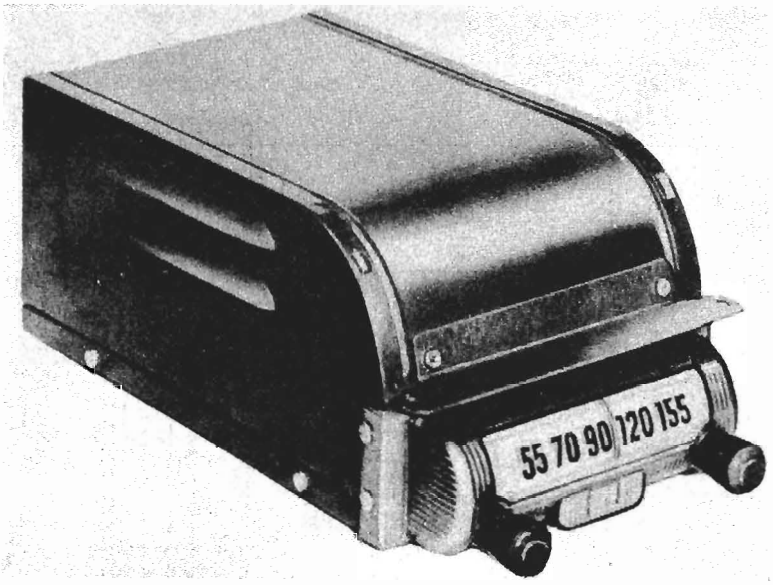

SCHEMATIC DIAGRAM REFERENCE	PART NO.	DESCRIPTION
		CONDENSERS
C2, C3, C5	C207	.05 MFD 200 volt condenser.....
C4, C12	C209	.5 MFD 100 volt condenser.....
C6	CC200	100 MMFD ceramic condenser...
C7, C9	CC201	200 MMFD ceramic condenser...
C8	C203	.002 MFD 400 volt condenser....
C10, C13	C206	.01 MFD 600 volt condenser.....
C11	C205	.008 MFD 1600 volt condenser...
CE-86	CE-86	20 MFD 350 volt electrolytic condenser..... 20 MFD 350 volt electrolytic condenser..... 20 MFD 25 volt electrolytic condenser.....
CV1,CV2, CV3	CV-148	3 section variable condenser.....
		RESISTORS
R1	R-309	1 megohm ½ watt 20% resistor..
R2, R14	R-303	330 ohm ½ watt 20% resistor....
R3	R-306	20K ohm ½ watt 20% resistor....
R4	R-314	1.5K ohm ½ watt 20% resistor...
R5	RV-57	Volume control ¾ megohm with switch.....
R6	R-310	2 megohm ½ watt 20% resistor..
R7	R-311	10 megohm ½ watt 20% resistor.
R8	R-313	20K ohm 2 watt 20% resistor....
R9	R-307	250K ohm ½ watt 20% resistor..
R10, R11	R-301	100 ohm ½ watt 20% resistor....
R12	R-312	1k ohm 1 watt 20% resistor.....
		COILS AND TRANSFORMERS
L1-C1	L-200	Motor Noise elimination unit.....
L2	57FB-3	Antenna Coil.....
L3	57FB-4	R.F. Coil.....
L4	L-201	R.F. Oscillator Coil.....

SCHEMATIC DIAGRAM REFERENCE	PART NO.	DESCRIPTION
L5	L-203	Choke "A" Line.....
L6	L-202	Choke, vibrator hash.....
T1	1655-16	1st I.F. Transformer.....
T2	1655-16	2nd I.F. Transformer.....
T3	TV86 or TV86A	Vibrator Transformer.....
T4		Output transformer (Part of speaker not furnished separately)....

PART NO.	DESCRIPTION
	DIAL PARTS
H201	Grommet, rubber drive.....
T51	Pilot light.....
H202	Pilot light socket.....
H203	Pulley, idler.....
H204	Spring, Dial drive string tension.....
H503	String, Dial drive.....
DP505	Dial Pan.....
PS 1024	Dial Pointer.....
DS -500	Drive shaft assembly.....
	Plastic Dial Scale front.....
H508	Knob.....
	MISCELLANEOUS
A300	"A" lead assembly.....
A201	Fuse 15 Amp.....
V-83	Vibrator.....
H-207	Clip, case anti-rattle.....
H-208	Clip, coil mounting.....
H-501	Case bottom.....
H-502	Case cover.....
PM-702-A	Speaker 5" (includes output transformer)..
H-212	Receptacle, Antenna Cable.....
GC-507	Speaker Grill Cloth and cardboard baffle..

©John F. Rider

Compliments of www.nucow.com

INSTALLATION

Due to the compact size of this receiver, many mounting positions are possible. However, the most convenient is directly below the instrument panel as illustrated in figure 1. The following step by step procedure will facilitate the installation of the receiver.

1. With the receiver itself as a model, select the desired position.

2. Using the front mounting bracket as a template locate the two front mounting holes and a ¼" hole at each point.

3. Attach front mounting bracket to the receiver by two No. 6 self-tapping screws.

4. Locate the position for the rear mounting stud in the bulkhead and drill a ½" hole.

5. With the stud mounted on the receiver and the inside nut and washer in place, insert the stud through the bulkhead hole and attach the front end of the receiver to the instrument panel with two 8-32 machine screws contained in kit of mounting hardware.

6. Open the engine compartment and remove the paint on the bulkhead around the stud. Assemble the washer and nut on this side and adjust both this nut and the inside nut for perfect alignment of the receiver and for good contact with the brightened surface of the bulkhead.
Caution: Do not screw stud in case beyond point necessary to insure support, otherwise, it may penetrate rear wall of case and cause damage to the instrument.

7. Attach the terminal of the "A" battery cable to one of the posts on the ammeter, preferably on the battery side. This may be ascertained by switching the receiver on. If no deflection of the ammeter occurs, the receiver is properly connected.

8. Insert plug on the end of the antenna lead into socket connector located on the left side of the radio.

ACCESSORIES FURNISHED FOR INSTALLATION

MOUNTING PARTS KIT

1 mounting stud
2 ⅜-16 hex nuts
2 ⅜" I.D. washers
2 8-32 machine screws
2 8-32 hex nuts
2 No. 8 washers
2 No. 8 lock washers

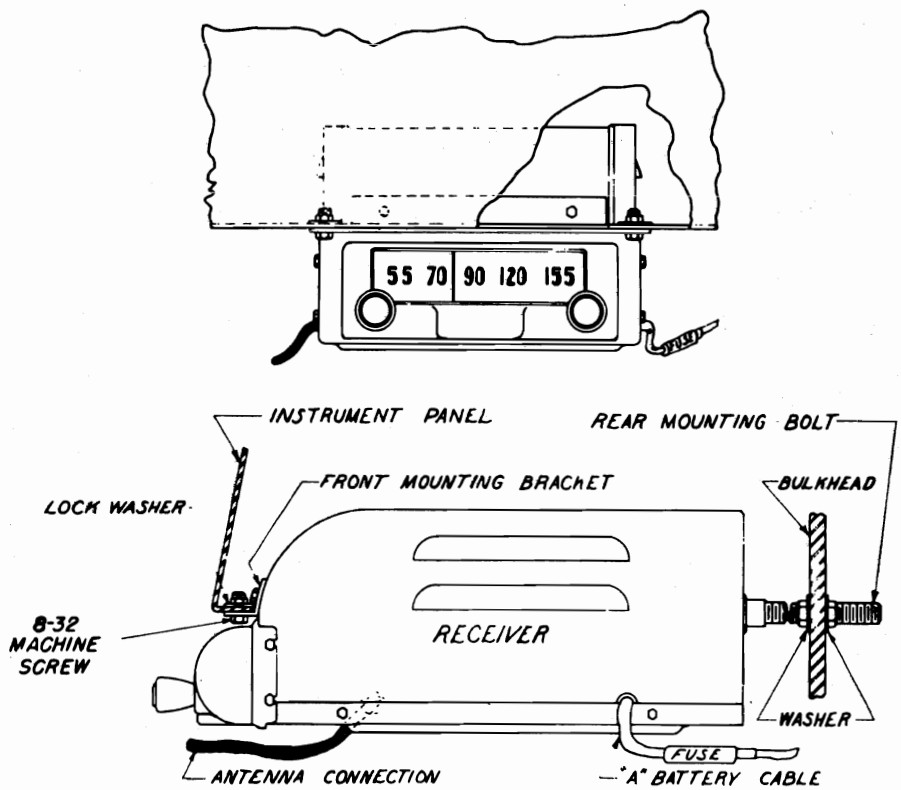

FIG. 1 DETAIL MOUNTING ASSEMBLY

©John F. Rider

Compliments of www.nucow.com

MODEL M-90

MOTOR NOISE ELIMINATION

SUPPRESSION KIT

1 .5 MFD Generator Condenser 1 Distributor Suppressor

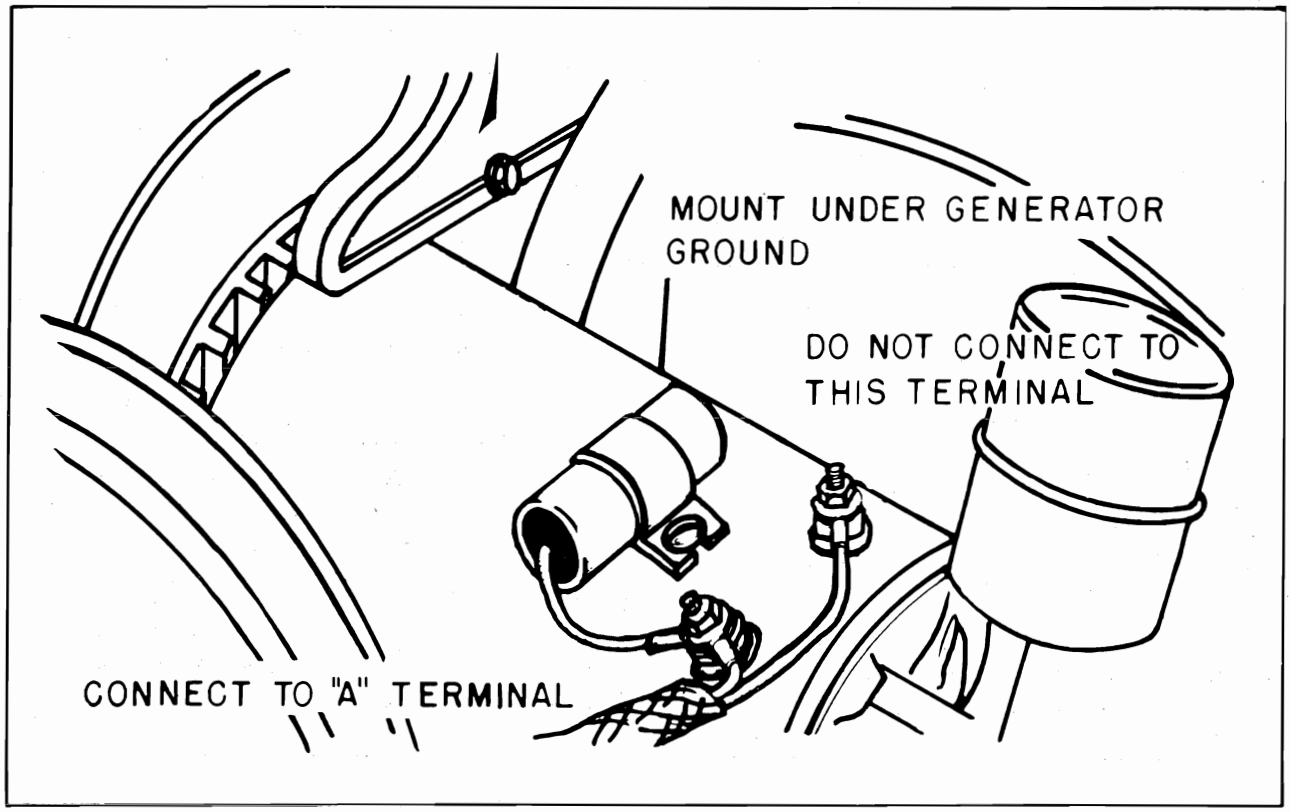

FIG. 2 GENERATOR CONDENSER

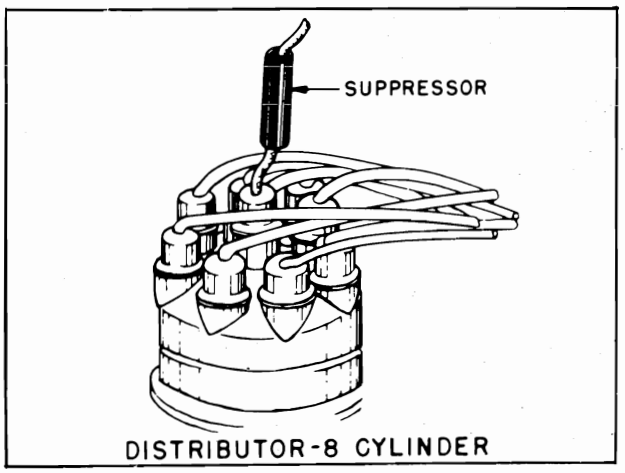

FIG. 3 DISTRIBUTOR SUPPRESSOR

GENERATOR CONDENSER

The generator condenser (Installed as shown in Figure 2) and distributor suppressor will normally eliminate all objectionable motor noise. If the motor noise persists, a .5 MFD by-pass condenser may be connected to either side of the ammeter with the ground lug fastened to a good ground nearby.

DISTRIBUTOR SUPPRESSOR

Disconnect the center lead in the distributor head of the motor (see Fig. 3). Cut lead approximately 2 inches back from metal tip end. Screw suppressor into cut end of long lead. Screw cut end of short lead into suppressor. Plug lead, with attached suppressor, back into distributor head.

WHEEL STATIC

Wheel static is a form of interference caused by the rotation of the front wheels of the car, and it is, of course, only noticed when the car is in motion. If this form of interference is present, it can be eliminated by installing wheel static collector springs between the inner hub cap and the spindle shaft.

ELECTRICAL ACCESSORIES

In some cases, it may be found that car accessories such as electric heaters, lighters, automatic relays or gauges, may cause interference while in operation. Proper procedure in such cases is to connect a .5 MFD by-pass condenser from ground to the suspected accessory until the source of interference is found. The condenser then should be permanently mounted in this location.

©John F. Rider

Compliments of www.nucow.com

ELECTRICAL SPECIFICATIONS

Power Supply ..... 6.3 Volts DC
Current ..... 5.5 Amp. average
Frequency Range ..... 538-1600 KC
Speaker ..... 5" PM 3.2. Ohm. V.C.
Power Output ..... 2 watts, undistorted
3 watts, maximum
Sensitivity ..... 2-3 microvolts average for 1 watt output
Selectivity .. 40 KC broad at 1000 times signal, at 1000 KC

This receiver contains the following:

1 — 6BA6 — RF Amplifier
1 — 6BE6 — Converter
1 — 6BA6 — I. F. Amplifier
1 — 6AT6 — Detector — AVC — 1st Audio
1 — 6AQ5 — Power Output
1 — 6X4 — Rectifier

SERVICE NOTES

Voltage taken from the different points of the circuit to the chassis are measured with volume control in maximum position, all tubes in their sockets, no signal applied, and with a volt meter having a resistance of 20,000 Ohms per volt. These voltages are clearly shown on the voltage chart.

All voltages should be measured with an input voltage of 6.3 volts DC.

To check for open by-pass condensers, shunt each condenser with another one having the same capacity and voltage rating which is known to be good until the defective unit is located.

ALIGNING INSTRUCTION

Never attempt any adjustments on this receiver unless it becomes necessary to replace a coil or transformer, or the adjustments have been tampered with in the field. Always make certain that other circuit components, such as tubes, condensers, resistors, etc., are normal before proceeding with realignment.

If realignment is necessary follow the instructions given under the heading "Alignment Procedure." After realignment has been completed repeat the procedure as final check.

ALIGNMENT PROCEDURE

Volume control — Maximum, all adjustments.
No signal applied to antenna.
Power input — 6.3 volts.
Connect dummy antenna in series with output lead of signal generator.
Connect ground lead of signal generator to chassis.
Repeat alignment procedure as a final check.

The following equipment is necessary for proper alignment:

Signal generator that will provide the test frequencies as listed, modulated 400 cycles, 30%.
Non-metallic screwdriver.
Output meter. (1.8 volt for 1 watt output.)
Dummy antennas — .1 MFD., 100 MMFD.

For alignment points refer to Schematic Diagram.

DIAL SETTING	GENERATOR FREQUENCY	DUMMY ANT.	GENERATOR CONNECTION	TRIMMER REFERENCE	TRIMMER ADJUSTMENT	TRIMMER FUNCTION
1) Fully open	455 KC	.1 MFD	6BE6 Grid	T2 Top & bottom	Maximum	Output I.F.
2) Fully open	455 KC	.1 MFD	6BE6 Grid	T1 Top & bottom	Maximum	Input I.F.
3) Fully open	1600 KC	100 MMFD	Ant. lead	CV2	Maximum	Oscillator
4) Tune in signal from generator	1400 KC	100 MMFD	Ant. lead	CV3	Maximum	RF Stage
5) Tune in signal from generator	1400 KC	100 MMFD	Ant. lead	CV1	Maximum	Antenna
6) Tune in signal from generator	600 KC	100 MMFD	Ant. lead	L3	Maximum	RF Stage
7) Tune in signal from generator	600 KC	100 MMFD	Ant. lead	L2	Maximum	Antenna
8) Repeat steps 4 and 5						

©John F. Rider

Compliments of www.nucow.com

MODEL M-90

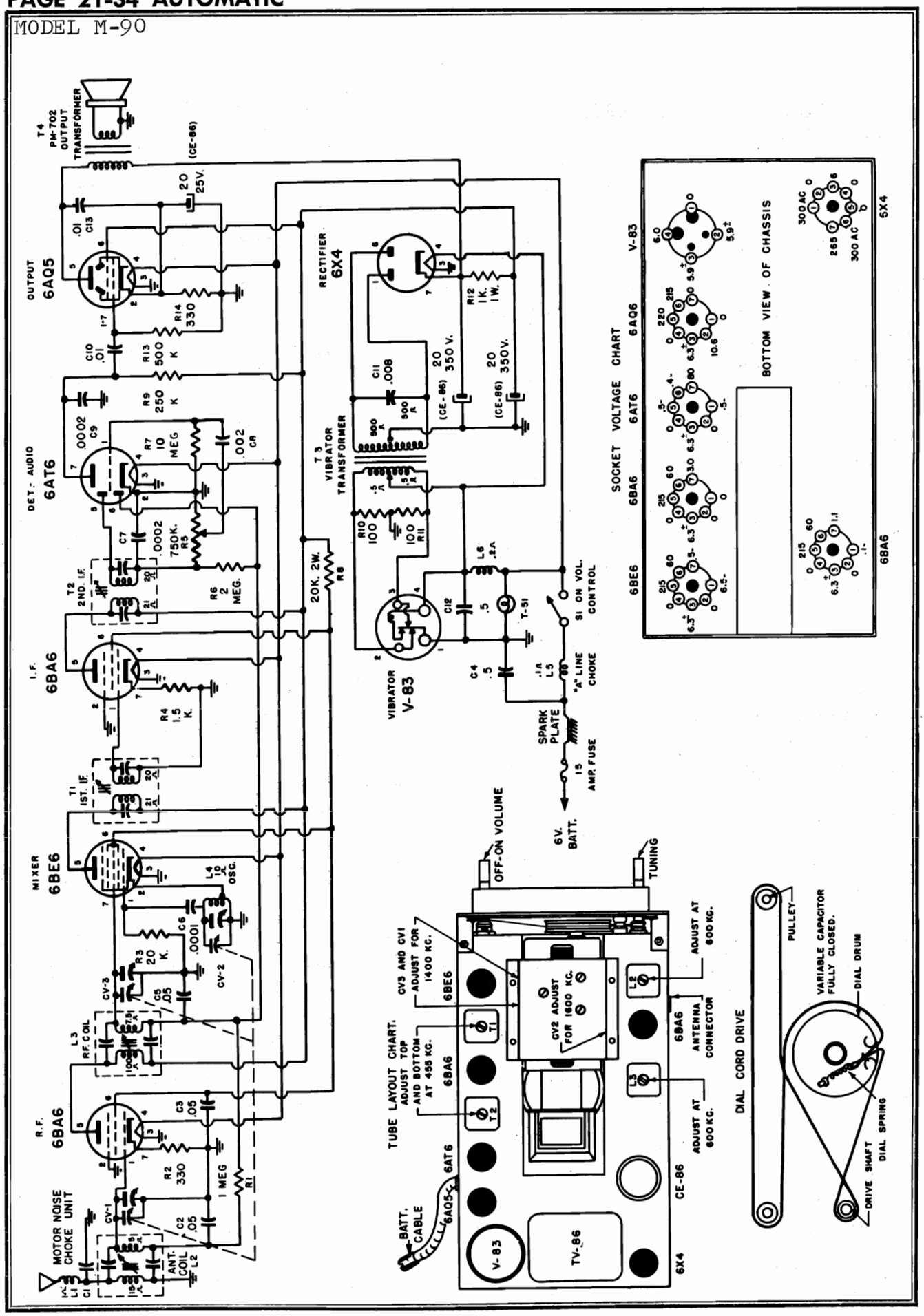

©John F. Rider

Compliments of www.nucow.com

MODEL X-50

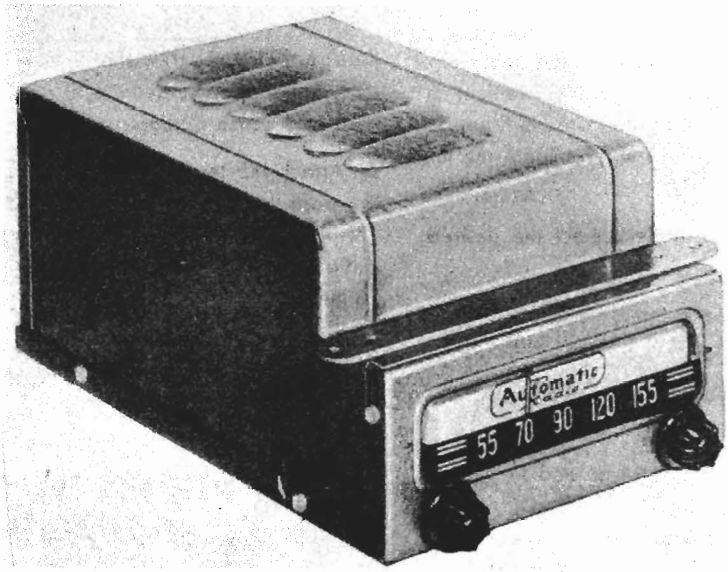

REPLACEMENT PARTS LIST

SCHEMATIC DIAGRAM REF. NO.	PART NO.	DESCRIPTION	
		CONDENSERS	
C3, C5	C207	.05 MFD 200 volt condenser....	
C4, C12	C209	.5 MFD 100 volt condenser.....	
C6	CC200	100 MMFD ceramic condenser...	
C7, C9	CC201	200 MMFD ceramic condenser...	
C8	C203	.002 MFD 400 volt condenser...	
C10, C13	C206	.01 MFD 600 volt condenser....	
C11	C220	.0125 MFD 1200 volt condenser.	
C15	CE-X50	20 MFD 150 volt electrolytic condenser.....	
		20 MFD 150 volt electrolytic condenser.....	
		20 MFD 25 volt electrolytic condenser.....	
		RESISTORS	
R3	R306	20K ohm ½ watt 20% resistor....	
R4, R10, R11	R301	100 ohm ½ watt 20% resistor....	
R5	RV-X50	Volume control ¾ megohm with switch.....	
R6	R310	2 megohm ½ watt 20% resistor..	
R8	R326	2K ohm 1 watt 20% resistor.....	
R9	R307	250K ohm ½ watt 20% resistor..	
R12	R308	500K ohm ½ watt 20% resistor..	
R13	R327	150 ohm ½ watt 20% resistor....	
R14	R312	1K ohm 1 watt 20% resistor.....	
		COILS AND TRANSFORMERS	
L1-C1	L200	Motor noise elimination Unit.....	
L2	57FB-3	Antenna Coil.....	
L4	L201	R.F. Oscillator coil.....	
L5	L203	Choke "A" line.....	
L6	L202	Choke, vibrator hash.....	

SCHEMATIC DIAGRAM REF. NO.	PART NO.	DESCRIPTION
T1	1655-16	1st IF transformer.....
T2	1655-16	2nd IF transformer.....
T3	TV-X50	Vibrator transformer.....
T4		Output transformer (Part of speaker, not furnished separately)...

PART NO.	DESCRIPTION
	DIAL PARTS
H201	Grommet, rubber drive.....
T51	Pilot light.....
H202	Pilot light socket.....
H203	Pulley, idler.....
H204	Spring, Dial drive string tension.....
H531	String, Dial drive.....
DP 530	Dial Pan.....
PS 800	Dial Pointer.....
DS 540	Drive shaft assembly.....
S556	Dial scale window.....
H508	Knob.....
F555	Felt washers (for knobs).....
	MISCELLANEOUS
A300	"A" lead assembly.....
A201	Fuse 15 Amp.....
V83	Vibrator.....
H207	Clip, case anti-rattle.....
H208	Clip, coil mounting.....
PM611	Speaker 5" (includes output transformer)...
H212	Receptacle, Antenna cable.....
GC607	Speaker Grill cloth.....
H601	Case bottom.....
H602	Case cover.....

©John F. Rider

Compliments of www.nucow.com

MODEL X-50

INSTALLATION

Due to the compact size of this receiver, many mounting positions are possible. However, the most convenient is directly below the instrument panel as illustrated in figure 1. The following step by step procedure will facilitate the installation of the receiver.

1. With the receiver itself as a model, select the desired position.

2. Using the mounting bracket as a template locate the two front mounting holes and drill a ¼" hole at each point.

3. Locate the position for the rear mounting stud in the bulkhead and drill a ½" hole.

4. With the stud mounted on the receiver and the inside nut and washer in place, insert the stud through the bulkhead hole and attach the front end of the receiver to the instrument panel with the two 8-32 machine screws contained in kit of mounting hardware.

5. Open the engine compartment and remove the paint on the bulkhead around the stud. Assemble the washer and nut on this side and adjust both this nut and the inside nut for perfect alignment of the receiver and for good contact with the brightened surface of the bulkhead.

Caution: Do not screw stud in case beyond point necessary to insure support, otherwise, it may penetrate rear wall of case and cause damage to the instrument.

6. Attach the terminal of the "A" battery cable to one of the posts on the ammeter, preferably on the battery side. This may be ascertained by switching the receiver on. If no deflection of the ammeter occurs, the receiver is properly connected.

7. Insert plug on the end of the antenna lead into socket connector located on the left side of the radio.

ACCESSORIES FURNISHED FOR INSTALLATION

MOUNTING PARTS KIT

1 mounting stud	2 8-32 machine screws
2 ⅜-16 hex nuts	2 8-32 hex nuts
2 ⅜" I.D. washers	2 No. 8 washers

2 No. 8 lock washers

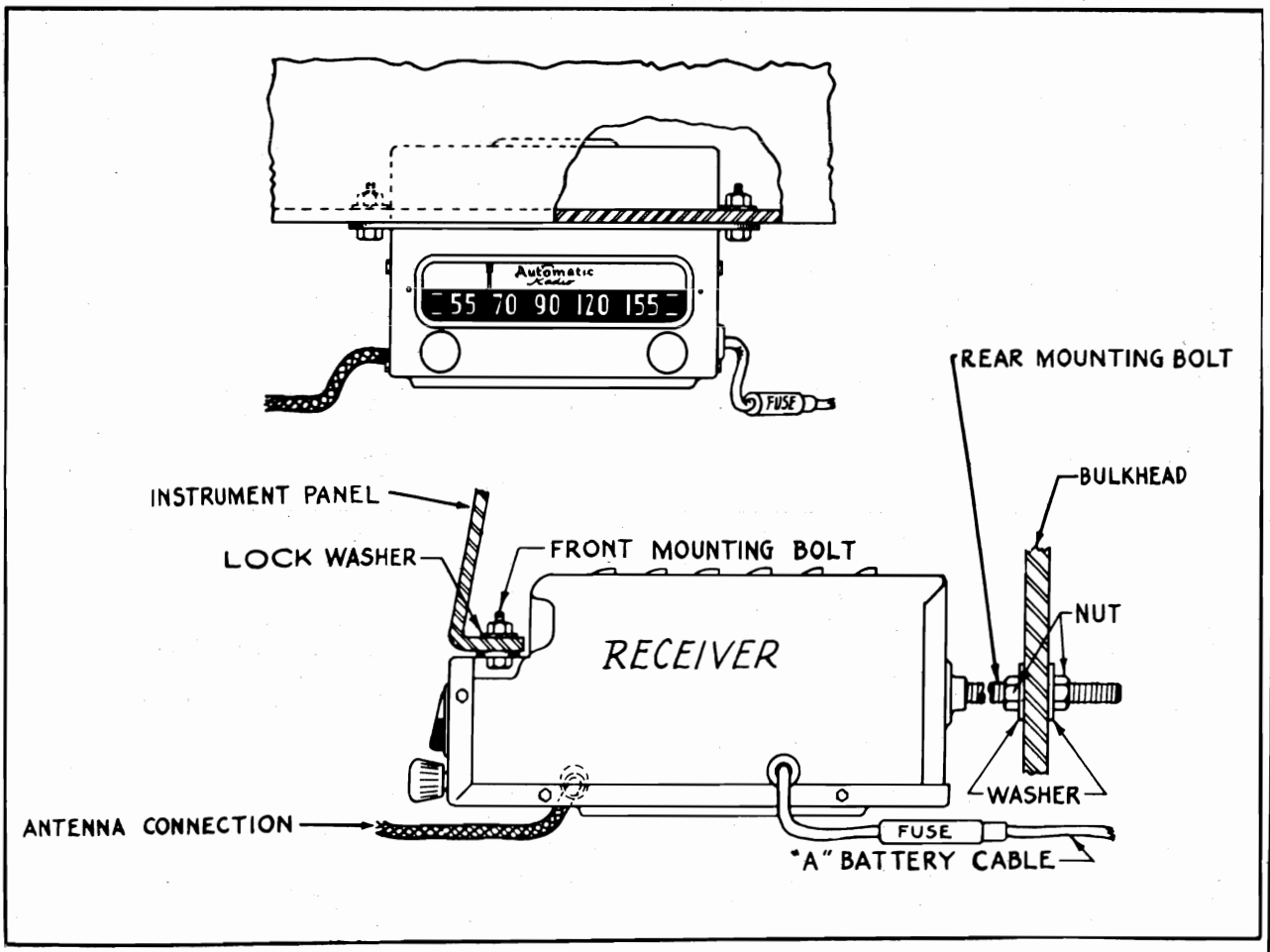

FIG. 1 RECEIVER MOUNTING DIAGRAM

©John F. Rider

Compliments of www.nucow.com

MODEL X-50

MOTOR NOISE ELIMINATION

SUPPRESSION KIT

A suppression kit is shipped with this receiver. It contains the following parts:

1 Generator Condenser. 1 Distributor Suppressor.

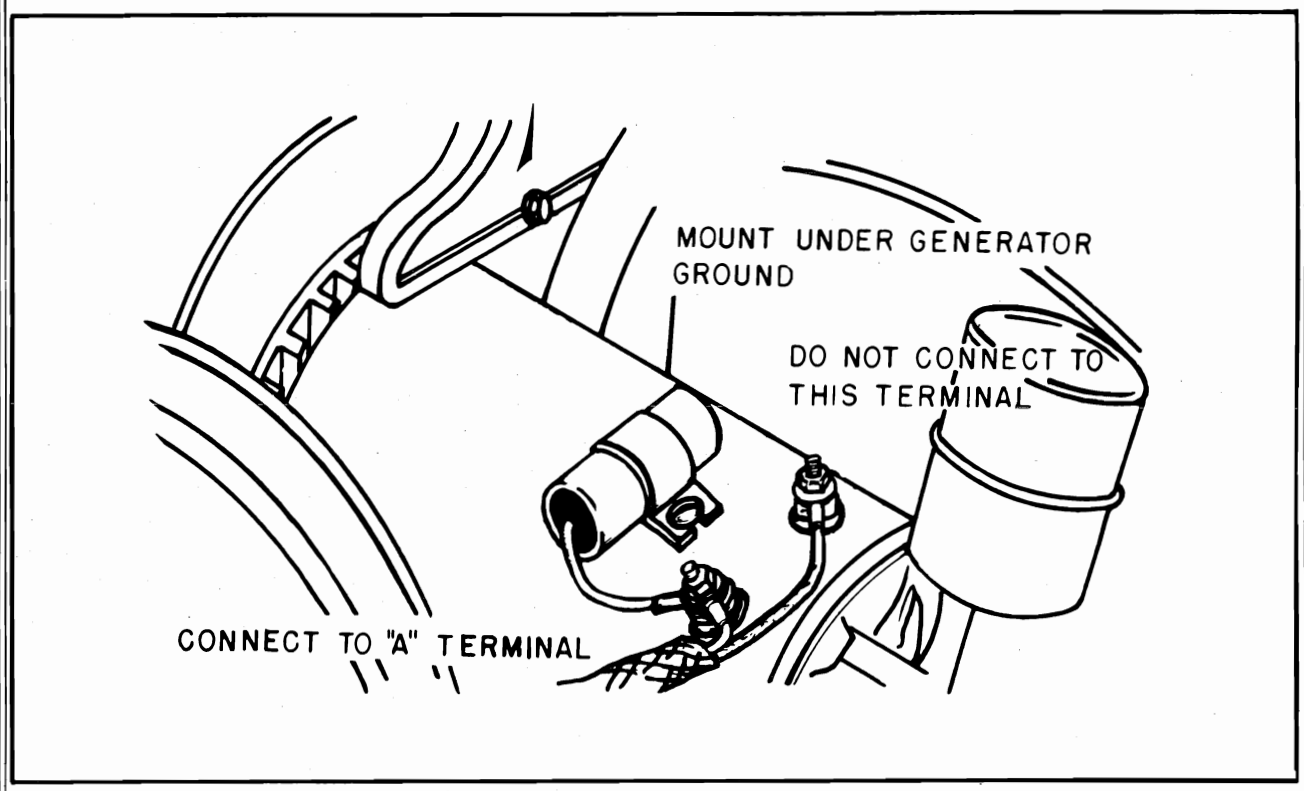

FIG. 2 GENERATOR CONDENSER

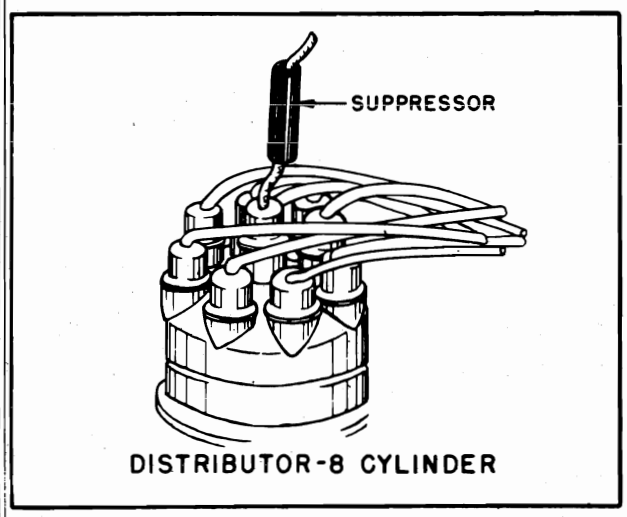

FIG. 3 DISTRIBUTOR SUPPRESSOR

GENERATOR CONDENSER

The generator condenser (Installed as shown in Figure 2) and distributor suppressor will normally eliminate all objectionable motor noise. If the motor noise persists, a .5 MFD by-pass condenser may be connected to either side of the ammeter with the ground lug fastened to a good ground nearby.

DISTRIBUTOR SUPPRESSOR

Disconnect the center lead in the distributor head of the motor (see Fig. 3). Cut lead approximately 2 inches back from metal tip end. Screw suppressor into cut end of long lead. Screw cut end of short lead into suppressor. Plug lead, with attached suppressor, back into distributor head.

WHEEL STATIC

Wheel static is a form of interference caused by the rotation of the front wheels of the car, and it is, of course, only noticed when the car is in motion. If this form of interference is present, it can be eliminated by installing wheel static collector springs between the inner hub cap and the spindle shaft.

ELECTRICAL ACCESSORIES

In some cases, it may be found that car accessories such as electric heaters, lighters, automatic relays or gauges, may cause interference while in operation. Proper procedure in such cases is to connect a .5 MFD by-pass condenser from ground to the suspected accessory until the source of interference is found. The condenser then should be permanently mounted in this location.

©John F. Rider

Compliments of www.nucow.com

MODEL X-50

ELECTRICAL SPECIFICATIONS

Power Supply .....6.3 Volts DC.
Current .....5.5 Amp. Average
Frequency Range .....538-1600 KC.
Speaker .....5" PM 3.2 Ohm V. C.
Power Output .....1.5 watts, undistorted
2 watts, maximum

This receiver contains the following:

1 — 6BE6 — Converter
1 — 6BA6 — I. F. Amplifier
1 — 6AT6 — Detector — AVC — 1st Audio
1 — 6AS5 — Power Output
1 — 6X4 — Rectifier

SERVICE NOTES

Voltage taken from the different points of the circuit to the chassis are measured with volume control in maximum position, all tubes in their sockets, no signal applied, and with a volt meter having a resistance of 20,000 Ohms per volt. These voltages are clearly shown on the voltage chart.

All voltages should be measured with an input voltage of 6.3 volts DC.

To check for open by-pass condensers, shunt each condenser with another one having the same capacity and voltage rating which is known to be good until the defective unit is located.

ALIGNING INSTRUCTION

Never attempt any adjustments on this receiver unless it becomes necessary to replace a coil or transformer, or the adjustments have been tampered with in the field. Always make certain that other circuit components, such as tubes, condensers, resistors, etc., are normal before proceeding with realignment.

If realignment is necessary follow the instructions given under the heading "Alignment Procedure." After realignment has been completed repeat the procedure as final check.

ALIGNMENT PROCEDURE

Volume control — Maximum, all adjustments.
No signal applied to antenna.
Power input — 6.3 volts.
Connect dummy antenna in series with output lead of signal generator.
Connect ground lead of signal generator to chassis.
Repeat alignment procedure as a final check.

The following equipment is necessary for proper alignment:
Signal generator that will provide the test frequencies as listed, modulated 400 cycles, 30%.
Non-metallic screwdriver.
Output meter. (1.8 volt for 1 watt output.)
Dummy antennas — .1 MFD., 100 MMFD.
For alignment points refer to Schematic Diagram.

DIAL SETTING	GENERATOR FREQUENCY	DUMMY ANT.	GENERATOR CONNECTION	TRIMMER REFERENCE	TRIMMER ADJUSTMENT	TRIMMER FUNCTION
1) Fully open	455 KC	.1 MFD	6BE6 Grid	T2 Top & bottom	Maximum	Output I.F.
2) Fully open	455 KC	.1 MFD	6BE6 Grid	T1 Top & bottom	Maximum	Input I.F.
3) Fully open	1600 KC	100 MMFD	Ant. lead	CV2	Maximum	Oscillator
4) Tune in signal from generator	1400 KC	100 MMFD	Ant. lead	CV1	Maximum	Antenna
5) Tune in signal from generator	600 KC	100 MMFD	Ant. lead	L2	Maximum	Antenna
6) Repeat steps 4 and 5						

©John F. Rider

Compliments of www.nucow.com

MODEL X-50

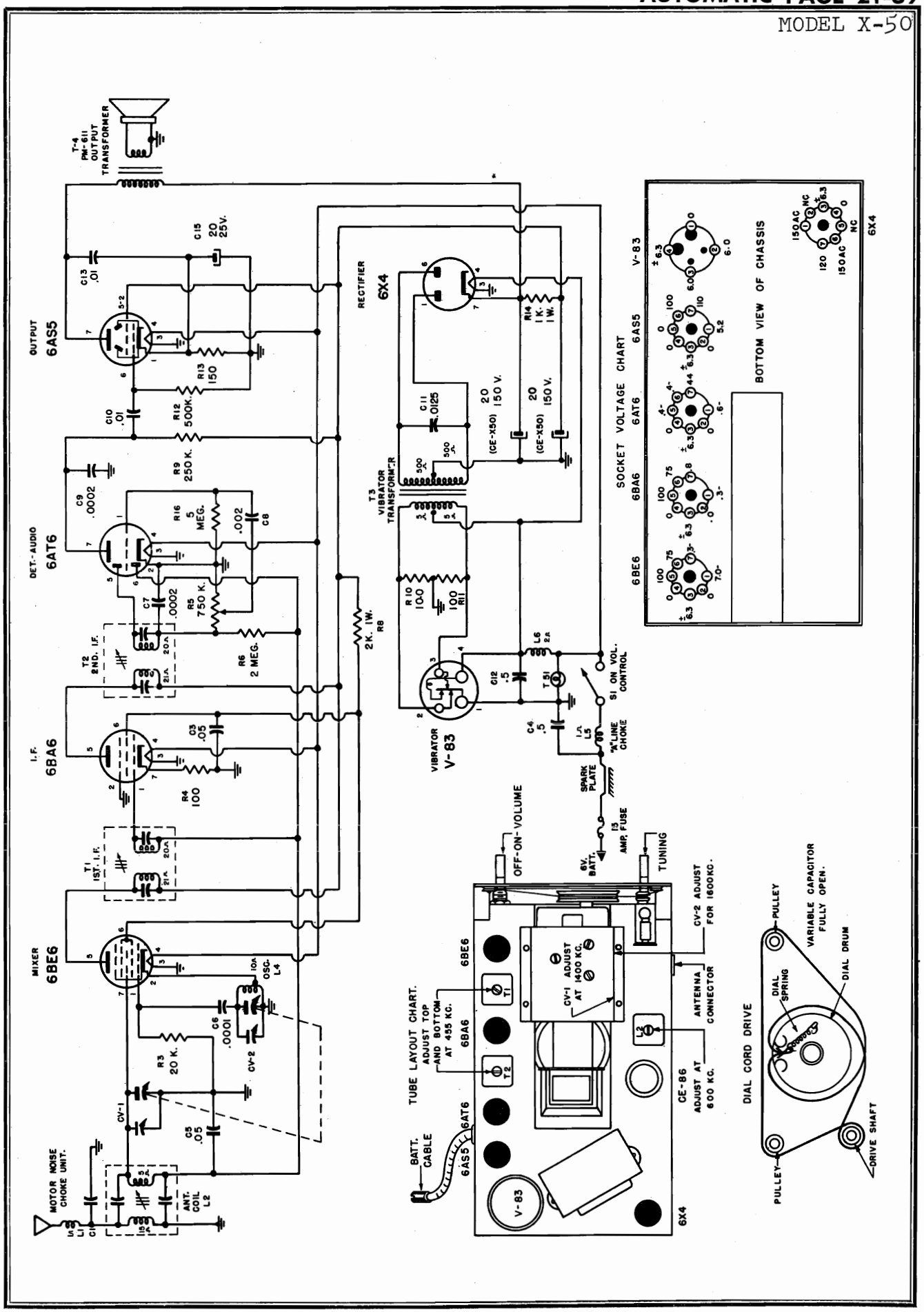

©John F. Rider

Compliments of www.nucow.com

Compliments of www.nucow.com

BENDIX CAR RADIOS M-1 & M-1A
1949 and Early 1950

General

Bendix Car Radios M-1 and M-1A are six tube superheterodyne receivers with vibrator power supplies and full wave rectifiers. The antenna, radio frequency, and oscillator circuits are inductively tuned, by means of push buttons or the manual tuning control, over a frequency range of 540 to 1610 kilocycles, by means of iron cores.

The On-Off, Volume and Tone Controls are on concentric shafts at the left of the receiver. The Manual Tuning Control is at the right. The Speaker is a separate unit.

TUBE COMPLIMENT

6SK7/GT	R.F. Amplifier	6SQ7/GT	Det., AVC & AF Ampl.
6SA7/GT	Converter	6V6/GT	AF Amplifier
6SK7/GT	I.F. Amplifier	6X5/GT	Rectifier

POWER SUPPLY

The power supply uses a 6X5/GT full wave rectifier tube in conjunction with a four prong full wave primary type vibrator.

ALIGNMENT

Recommended Test Equipment:

Signal Generator - 260 to 1700 KC range. Output from 1 to 100,000 microvolts. Modulation 30% to 400 cycles.

Output meter - 2 watt capability or, P.M. Speaker, for alignment by ear as an alternate.

Dummy Antenna - Constructional circuit included in the rear section of this manual.

General:

Make all alignment adjustments to the receiver with "A" lead connected to a 7.2 volt negative source, and ground the chassis to the positive side of this source. Rotate the volume, tone and sensitivity controls to their maximum clockwise position. Connect the output meter across the speaker voice coil. Use an insulated screw driver for making all adjustments. Use shielded cables for connections between signal generator, dummy antenna, and receiver. For each adjustment, the signal level should be kept as low as possible while still obtaining a reasonable output indication. The signal level should be controlled at the signal generator, and not with the receiver controls. With the sensitivity control turned fully clockwise as instructed above, some of the older type M-1 receivers will have I.F. oscillation during alignment. In these receivers, capacitor C-5 is .1 mfd. Changing the value of this capacitor to .5 mfd will correct this trouble.

1. I.F. Alignment
   (a) Set the signal generator frequency to 262.5 K.C. Connect the signal lead thru a .1 mfd condenser to the receiver antenna connection.
   (b) Turn the receiver manual tuning control for the high frequency end of the dial.
   (c) Adjust the I.F. trimmers "C18B", "C18A", "C15B", and "C15A" for maximum output. Repeat this operation to assure accurate alignment.
   (d) Adjust the I.F. wave trap trimmer, C32, for minimum output.

©John F. Rider

Compliments of www.nucow.com

MODELS M-1,
M-1A, Ford

2. R.F. Alignment

(a) Check to see that the dial pointer stops just off of the left edge of the calibration marker, under the 55, when the manual tuning control has been rotated clockwise to where this pointer stops. If incorrect, the pointer should be bent slightly to correspond to the above instructions.
(b) Set the signal generator to 1610 KC, and connect the signal lead thru the dummy antenna to the receiver antenna socket.
(c) Turn the receiver tuning control until the dial pointer is at the right hand edge of the 16 calibration mark.
(d) Adjust the oscillator trimmer C9 for maximum output.
(e) Set the signal generator to 1400 KC; tune in the signal on the receiver.
(f) Adjust the R.F. trimmer C12 for maximum output.
(g) Adjust the antenna trimmer C1 for maximum output.
(h) Set signal generator to 600 KC and tune in the signal carefully.
(j) Observe the output meter reading.
(k) Turn L6 adjusting screw one turn clockwise. Retune the signal with the tuning control and observe the new output meter reading carefully.
(l) If operation (k) shows an increase in output over (j) continue to turn L6 in single turn clockwise steps, retuning the signal after each turn, and observing the output reading each time. See (n) below.
(m) If operation (k) shows a decrease in output over (j) the direction for turning L6 adjustment must be reversed to counter-clockwise.
(n) Continue the process of adjusting L6 for one turn at a time, retuning the receiver for the greatest output each turn of L6. A peak setting will be reached, at which point the signal can be tuned in for a greater output than at any other setting of L6 adjustment.
(o) Repeat operations (b), (c), (d), (e), (f), and (g).

3. Sensitivity Control Adjustment

(a) Using the dummy antenna, the signal generator should be connected to the receiver as in the R.F. alignment procedure. Make sure the receiver volume control is fully clockwise.
(b) Apply a signal, 30 per cent modulated at 400 cycles, of sufficient strength to produce one watt output, when tuned in on the receiver.
(c) Remove modulation and adjust the sensitivity control R2 for 100 milliwatts of noise, maximum, at the worst point in the band. This will usually be found at the low frequency end of the dial.

4. Alignment With Car Antenna

Withe the antenna fully extended, tune in a weak station near 1400 kilocycles and adjust the antenna trimmer C1 for maximum volume.

MODEL M-1 SCHEMATIC CIRCUIT

Use the Schematic Circuit for the Model M-1A, which is included in this manual, except that the following differences should be noted:

1) The tube socket showing voltage and resistance measurements for the 6SQ7GT tube should read zero voltage and 300K ohms on Pin #4, for the M-1 model.
2) Sensitivity control, R-2 is 900 ohms in the M-1 model.
3) In the 6SQ7GT tube circuit, pin 4 of this socket connects to pin 5 in the M-1 model.

With the exception of the above differences, the Schematic Circuits for Models M-1 and M-1A are identical to each other.

©John F. Rider

Compliments of www.nucow.com

MODELS M-1, M-1A, Ford

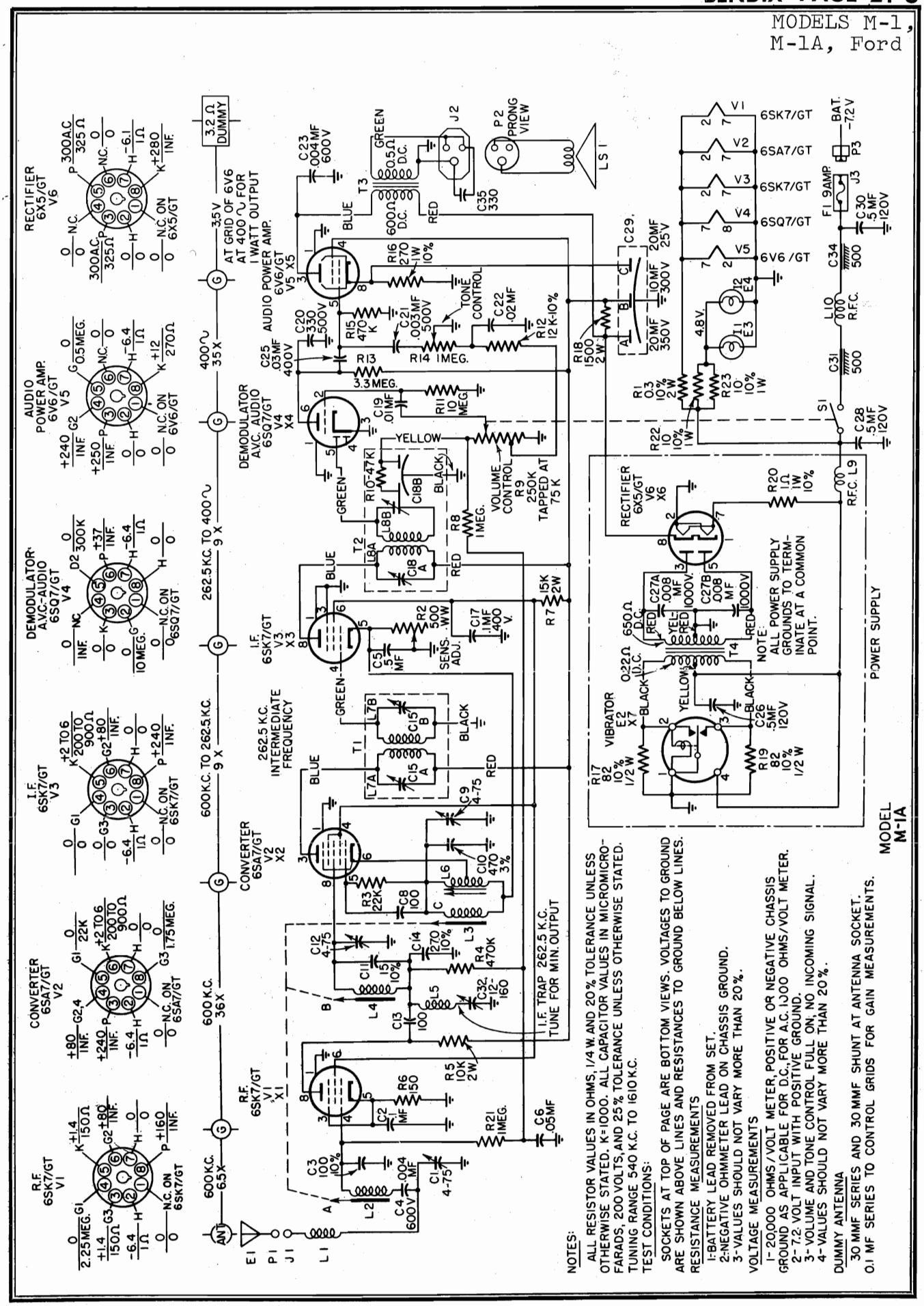

©John F. Rider

Compliments of www.nucow.com

MODELS M-1,
M-1A, Ford

LOCATION PLAN
ALIGNMENT TRIMMERS & TUBES

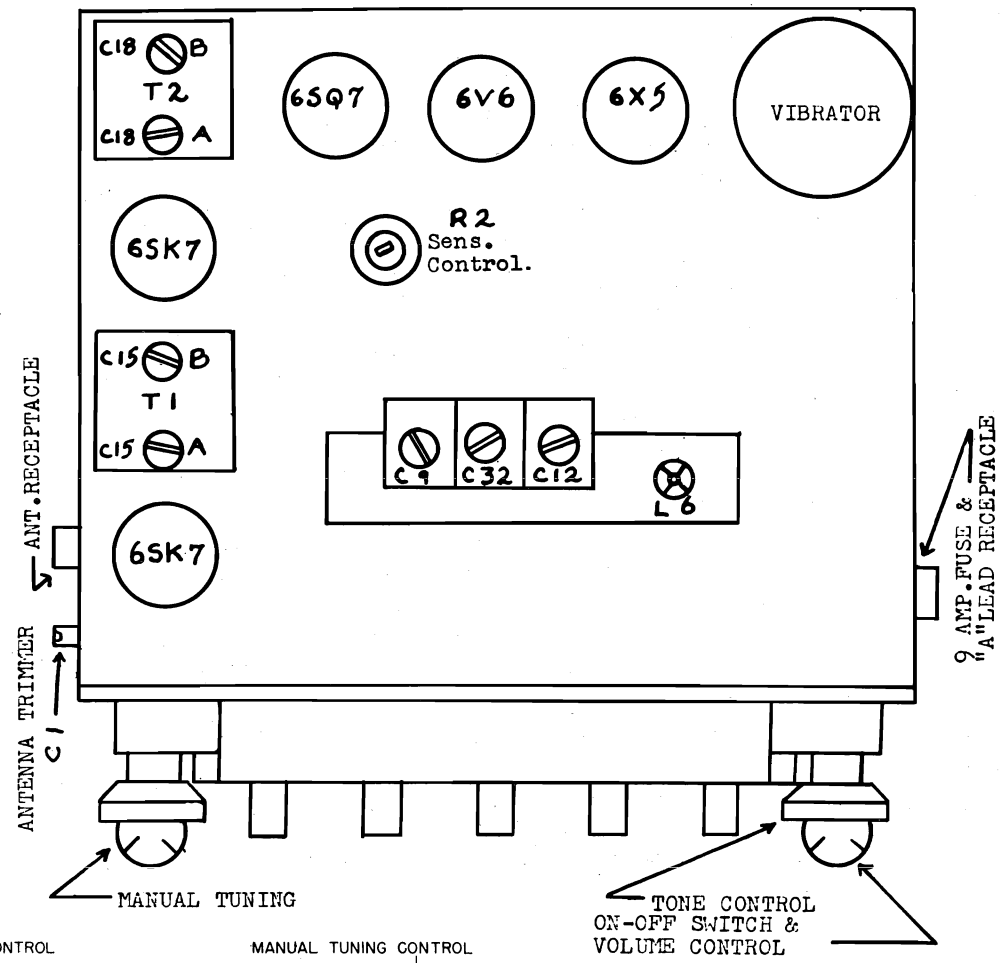

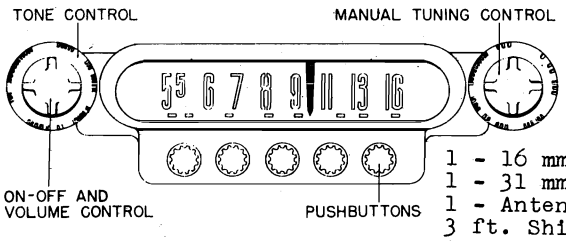

Figure 1—Operating Controls

Material Required

1 - 16 mmf Ceramic Capacitor plus or minus 1 mmf.
1 - 31 mmf Ceramic Capacitor plus or minus 1 mmf.
1 - Antenna Connector, Male, C223183.
3 ft. Shielded Wire.
A shield can, or other material for a shielded housing.

DETAILS FOR CONSTRUCTING
DUMMY ANTENNA

The purpose of the dummy antenna is to properly match the output of the signal generator to the receiver input. It should be remembered, however, that the dummy antenna described below antennuates, or reduces, the signal by two. Thus, if the signal generator is feeding 10 microvolts of signal to the dummy antenna, the receiver will be receiving only 5 microvolts of signal from the dummy antenna.

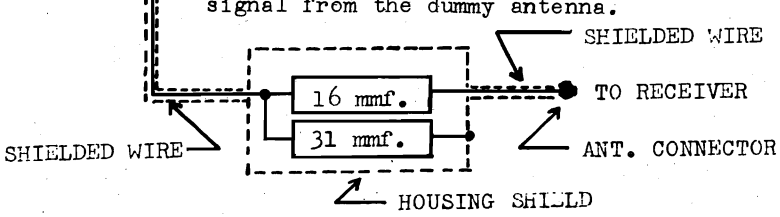

©John F. Rider

Compliments of www.nucow.com

MODELS 5015I, 5015W

ALIGNMENT AND SERVICE DATA

Remove chassis from cabinet for alignment.

A Signal Generator is required having the following frequencies: 455 KC, 1400 KC, 1720 KC. An output meter should be connected across the speaker.

The receiver volume control should be turned to maximum during the I.F. and all subsequent alignments to keep the AVC from working and giving false readings. Keep the generator output as low as possible to prevent overloading.

FIRST STEP: Connect the hot lead from the generator to the ANT. section of the gang condenser, through a .1 MFD condenser. The ground lead from the generator must be connected to the floating ground buss under the chassis. Turn the gang condenser to complete minimum capacity. Adjust the generator to 455KC and adjust the trimmers of the 1st and 2nd I.F. transformers until a maximum reading is noted on the output meter.

SECOND STEP: With the leads from the generator still connected in the same manner, adjust the Signal Generator to 1720 KC. The OSC. trimmer is located on the front of the chassis. Adjust this trimmer until the 1720 KC signal is tuned in.

THIRD STEP: Remove the hot lead of the generator from the ANT section of the gang condenser. Connect this lead to the primary of the loop antenna through a 200 MMFD condenser. Adjust the Signal Generator to 1400 KC. Rotate the tuning control until this signal is tuned in. The ANT trimmer is located on the top of the ANT. section of the gang condenser. Adjust this trimmer until a maximum reading is noted on the output meter. No further adjustment should be necessary, unless the set has been damaged, as the coils and condenser in this receiver have been specially handled at the factory to insure proper alignment at the lower frequencies.

PART NO.		DESCRIPTION
IR-9	R-1	22,000 Ω RESISTOR ½W.20%
IR-23	R-2	3.3 MEG. RESISTOR ½W.20%
VC-4	R-3	1 MEG. VOL. CONTROL & SW.
IR-13	R-4	2.2 MEG. RESISTOR ½W.20%
IR-14	R-5	150 Ω RESISTOR ½W.20%
IR-11	R-6	470M Ω RESISTOR ½W.20%
IR-17	R-7	33 Ω RESISTOR ½W.20%
IR-25	R-8	2,200 Ω RESISTOR 1W.10%
PC-8	C-1	.1MFD. COND.-400V.
PC-5	C-2	.05 MFD. COND.-400V.
PC-7	C-3	.01 MFD. COND.-400V.
EC-12	C-4	40 MFD. 150 V. ELECTROLYTIC
	C-5	20 MFD.
MC-2	C-6	100 MMFD. MICA COND.
MC-5	C-7	500MMFD. MICA COND.
IR-10	R-10	47M Ω 1/2 W 20 %
	C-8	ANTENNA TRIMMER COND.
	C-9	OSC. TRIMMER COND.
IR-20	R-9	220M Ω RESISTOR ½W 20%
GC-6	G-1	GANG CONDENSER
	G-2	
LL-12	L-1	LOOP ANTENNA
LO-13	L-2	OSC. COIL
LI-1	T-1	INPUT I.F. TRANSFORMER
LI-2	T-2	OUTPUT I.F. TRANSFORMER
	T-3	OUTPUT SPKR. TRANSFORMER
SPK-6	V.C.	VOICE COIL
	S	P.M. SPEAKER
PB-1	PL	No. 47 PILOT BULB
	SW.	A.C. SW. ON VOL. CONTROL
CO-1	P	LINE CORD
TU-3	——	12SA7 GT 12SK7 GT 12SQ7 GT 50L6GT 35Z5GT

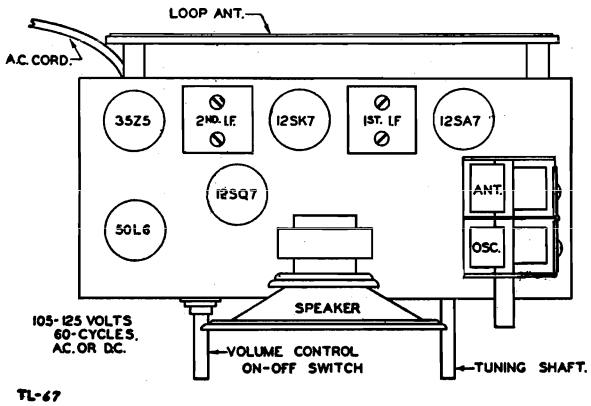

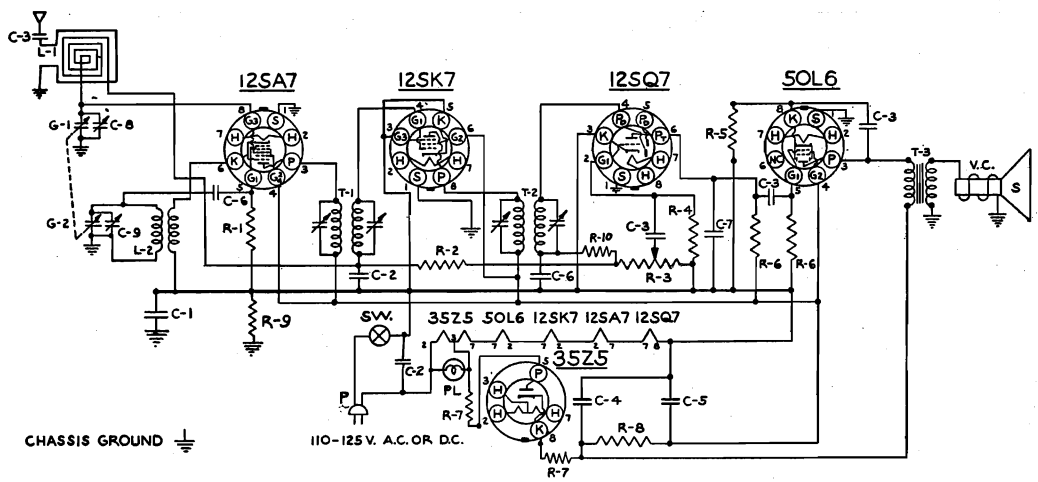

©John F. Rider

Compliments of www.nucow.com

MODELS 5066I,
5055W

ALIGNMENT AND SERVICE DATA

Remove chassis from cabinet for alignment.

A Signal Generator is required having the following frequencies: 455 KC, 1400 KC, 1720 KC. An output meter should be connected across the speaker.

The receiver volume control should be turned to maximum during the I.F. and all subsequent alignments to keep the AVC from working and giving false readings. Keep the generator output as low as possible to prevent overloading.

FIRST STEP: Connect the hot lead from the generator to the ANT. section of the gang condenser, through a .1 MFD condenser. The ground lead from the generator must be connected to the floating ground buss under the chassis. Turn the gang condenser to complete minimum capacity. Adjust the generator to 455KC and adjust the trimmers of the 1st and 2nd I.F. transformers until a maximum reading is noted on the output meter.

SECOND STEP: With the leads from the generator still connected in the same manner, adjust the Signal Generator to 1720 KC. The OSC. trimmer is located on the front of the chassis. Adjust this trimmer until the 1720 KC signal is tuned in.

THIRD STEP: Remove the hot lead of the generator from the ANT section of the gang condenser. Connect this lead to the primary of the loop antenna through a 200 MMFD condenser. Adjust the Signal Generator to 1400 KC. Rotate the tuning control until this signal is tuned in. The ANT trimmer is located on the back of the loop antenna. Adjust this trimmer until a maximum reading is noted on the output meter. No further adjustment should be necessary, unless the set has been damaged, as the coils and condenser in this receiver have been specially handled at the factory to insure proper alignment at the lower frequencies.

PART NO.		DESCRIPTION
PC-7	C-1	.01MFD. CONDENSER 400 V
PC-5	C-2	.05MFD. CONDENSER 400 V
PC-8	C-3	.1MFD. CONDENSER 400 V.
MC-2	C-4	.0001 MICA CONDENSER
MC-4	C-5	.00005 MICA CONDENSER
MC-5	C-6	.0005 MICA CONDENSER
PC-6	C-7	.005MFD. CONDENSER 600 V.
EC-2	C-8	10MFD. 25W.V. ELECTROLYTIC
EC-14	C-9	40MFD.
	C-10	40MFD. ELECTROLYTIC. 150 W V
	C-11	20MFD.
IR-20	R-1	220M RESISTOR 1/2W 20 %
IR-22	R-2	3900 RESISTOR 1/2W. 10 %
IR-10	R-3	47M RESISTOR 1/2W 20%
IR-9	R-4	22M RESISTOR 1/2W. 20 %
IR-23	R-5	3.3MEG. RESISTOR 1/2W. 20 %
IR-17	R-6	33 RESISTOR 1/2W. 20%
VC-13	R-7	1 MEG. VOLUME CONTROL
IR-13	R-8	2.2MEG. RESISTOR 1/2W. 20%
IR-5	R-9	220 RESISTOR 1/2W. 10%
IR-11	R-10	470M RESISTOR 1/2W 20%
IR-21	R-11	330 RESISTOR 1/2W 10%
GC-5	G-1	GANG CONDENSER
	G-2	
	G-3	ANT TRIMMER
	G-4	OSC. TRIMMER
LL-16	L-1	LOOP ANT.
LO-10	L-2	OSC COIL.
LI-6	T-1	INPUT I.F TRANSFORMER
LI-7	T-2	OUTPUT I.F TRANSFORMER
	SW	SWITCH ON VOLUME CONTROL
SPK-12	T-3	OUTPUT TRANSFORMER
	S	5" P.M. SPEAKER
PB-1	PL	#47 PILOT BULB
CO-1	P	LINE CORD

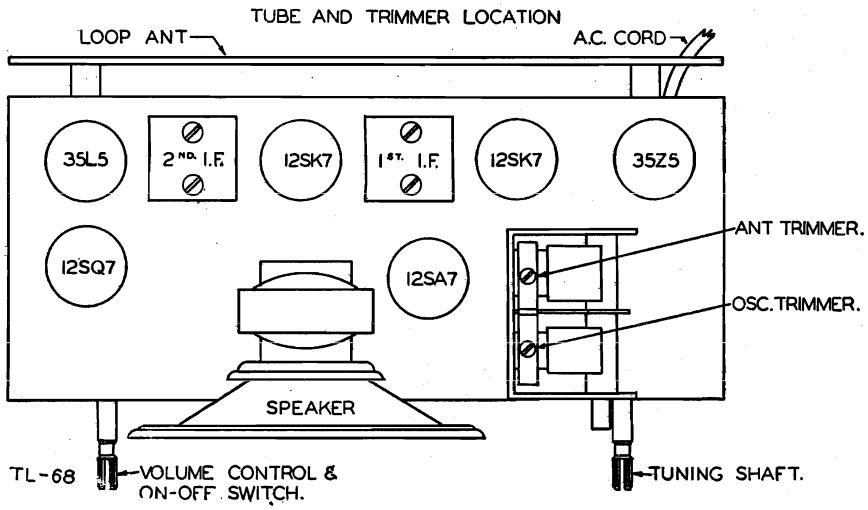

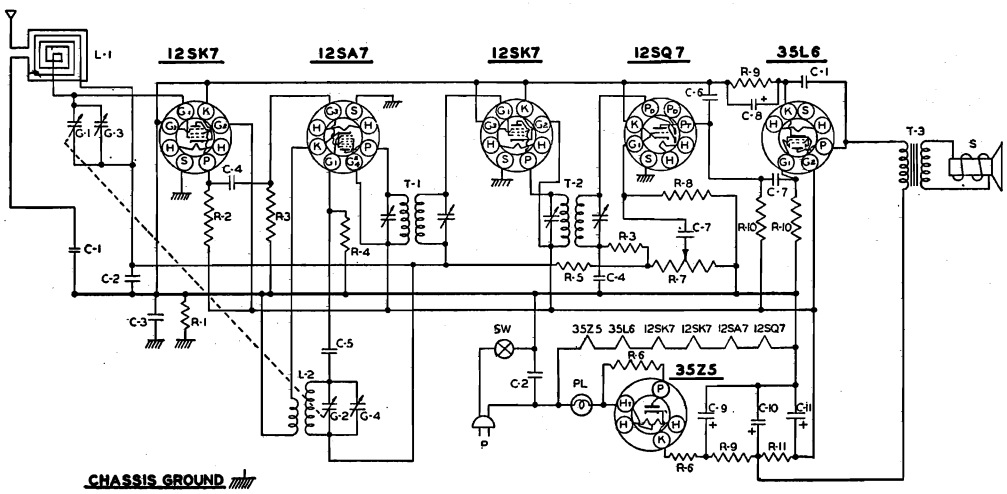

©John F. Rider

Compliments of www.nucow.com

MODELS 10-102E, 10-103, 10-104W

Model 10-102E (Ebony)

Model 10-103 (Brown)

Model 10-104W (Ivory)

DESCRIPTION

TYPE: Five-tube, single band, Superheterodyne.

FREQUENCY RANGE: 540 to 1600 kc.

INTERMEDIATE FREQUENCY: 455 kc.

POWER SUPPLY: a.c.-d.c.

VOLTAGE RATING: 105-125 volts.

POWER CONSUMPTION: 30 watts.

POWER OUTPUT: 1.5 watts maximum.

TUBE COMPLEMENT

Type	Function
12BE6	Converter
12BA6	I. F. Amplifier
12AV6	Detector, AVC, 1st A.F. Amplifier
50C5	A.F. Power Output
35W4	Rectifier

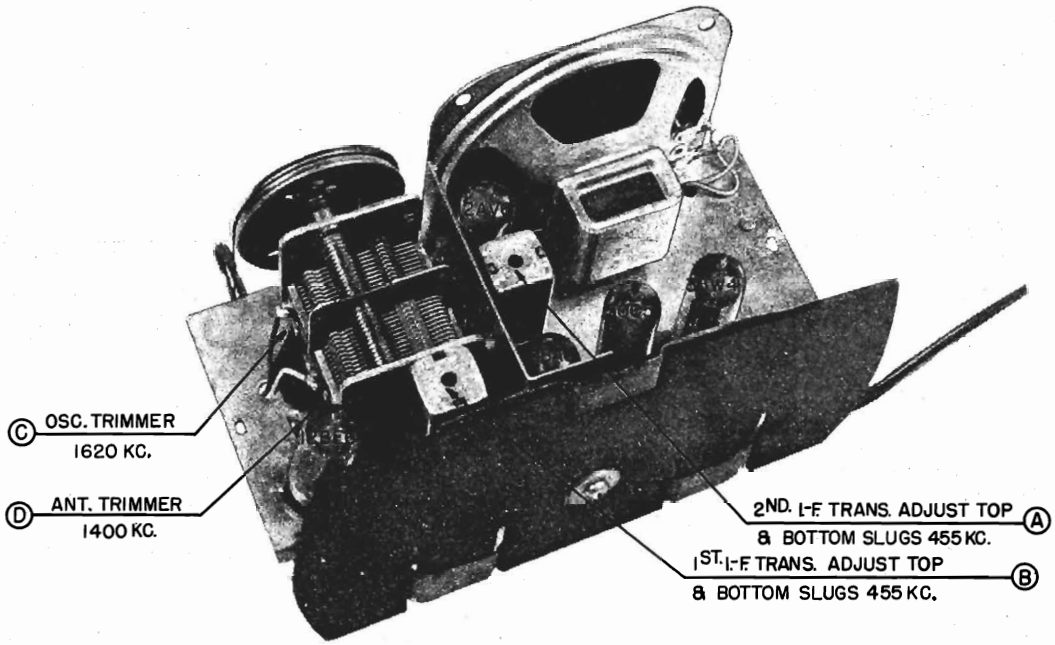

CHASSIS, TOP VIEW

©John F. Rider

Compliments of www.nucow.com

MODELS 10-102E,
10-103, 10-104W

When using direct current it may be necessary to reverse the position of the power plug in the electric outlet for correct polarity.

Reversing the position of the power plug when alternating current is used may reduce hum.

Under no circumstances should a ground be connected to this receiver.

ALIGNMENT PROCEDURE

1. Connect an output meter across the speaker voice coil.
2. The r.f. signal input from the signal generator should be connected to the high side of loop antenna. Connect the signal generator ground through a 0.1 mfd. condenser to B— (pin 2 on 12BA6 tube socket).
3. Turn the volume control on full and adjust the signal generator output to produce approximately midscale deflection of the output meter, but maintain signal generator output as low as possible to prevent AVC action in the receiver.

ALIGNMENT CHART

Alignment adjustment locations are shown on page 1, "CHASSIS, TOP VIEW."

Alignment Sequence	Signal Generator Output			Position of Dial Pointer	Adjust for Maximum Output
	Frequency in kc.	In Series with	To		
1	455	200 mmf.	High Side of Loop	1620	A & B
2	1620	*Radiated to Loop		1620	C
3	1400	*Radiated to Loop		1400	D

* Place signal generator output lead near the loop antenna.

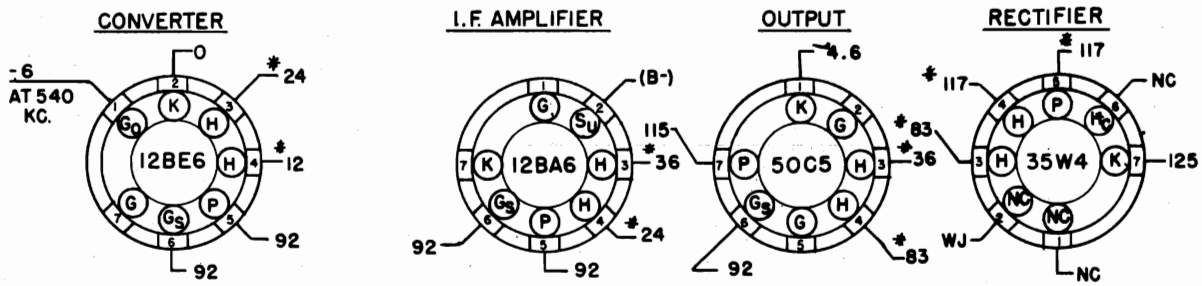

NOTES:
1. BOTTOM VIEW OF TUBE SOCKETS.
2. MEASURE VOLTAGE WITH AN ELECTRONIC VOLTMETER FROM SOCKET LUG TO B- PIN 2 ON THE 12BA6
3. LINE VOLTAGE 117 V. 60 ~
4. NC = NO CONNECTION
5. W.J. = WIRING JUNCTION
6. * = A.C. VOLTAGE
7. SOCKET VOLTAGE TOLERANCE ± 10%

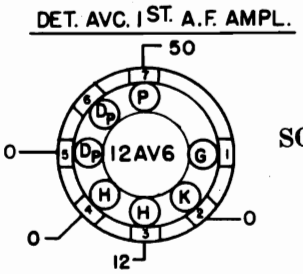

SOCKET VOLTAGE CHART

©John F. Rider

Compliments of www.nucow.com

MODELS 10-102E, 10-103, 10-104W

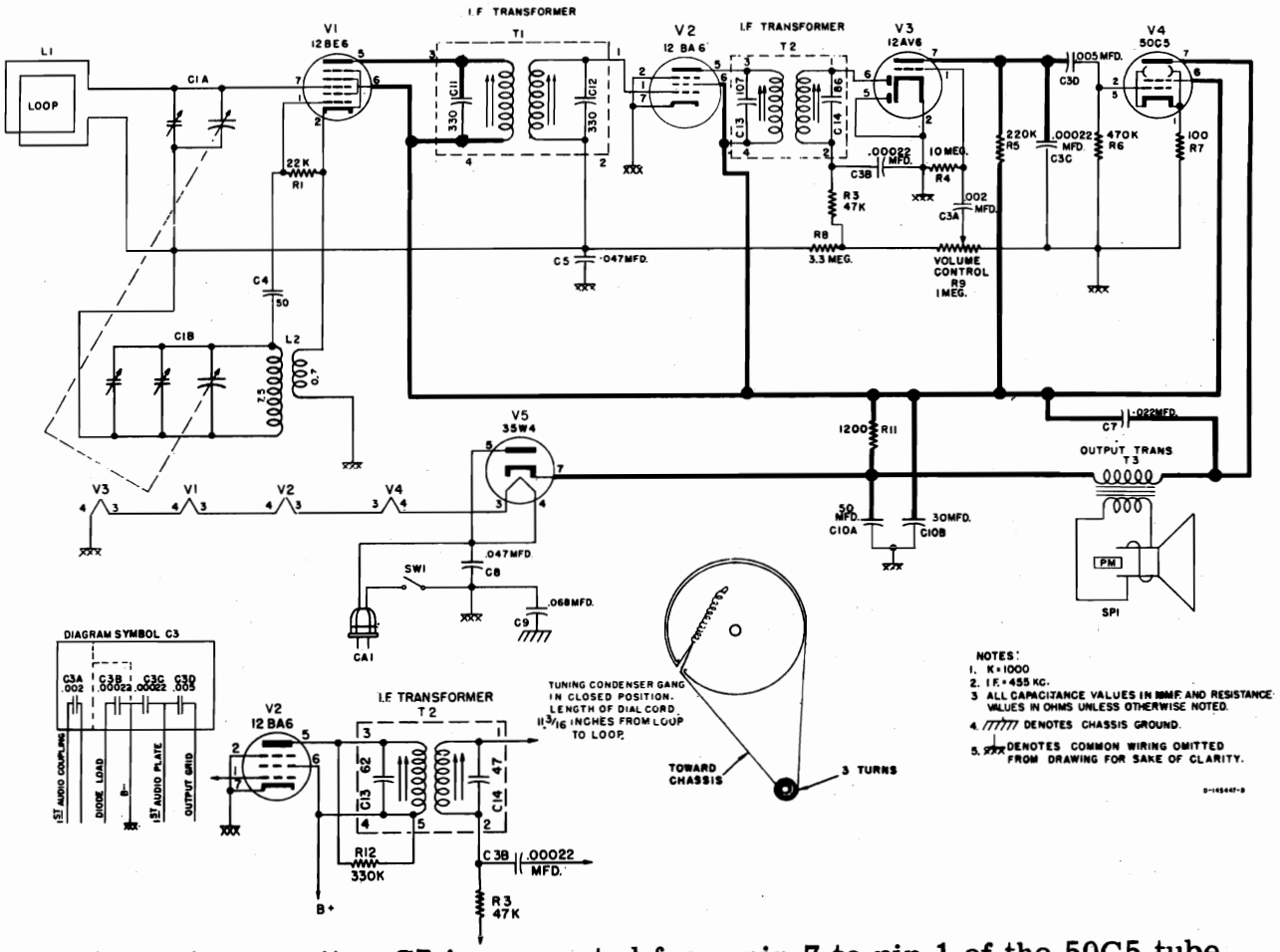

On later sets capacitor C7 is connected from pin 7 to pin 1 of the 50C5 tube instead of across the primary of the output transformer. This will improve stability.

REPLACEMENT PARTS LIST

Symbol No.	Part No.	Description
C1A	B-138292-3	Capacitor, Variable
C1B		Capacitor, Variable
C3A	B-144675-1	Capacitor, .002 mfd. (Four Section)
C3B		Capacitor, .00022 mfd. (Four Section)
C3C		Capacitor, .00022 mfd. (Four Section)
C3D		Capacitor, .005 mfd. (Four Section)
C4	C-137727-21	Capacitor, 50 mmf., 500 v., ceramic
C5	39477-45	Capacitor, .047 mfd., 600v., molded paper
C7	39477-43	Capacitor, .022 mfd., 600v., molded paper
C8	39477-45	Capacitor, .047 mfd., 600v., molded paper
C9	39477-46	Capacitor, .068 mfd., 600v., molded paper
C10A	B-136770	Capacitor, 50 mfd., 150v. (Two Section Electrolytic)
C10B		Capacitor, 30 mfd., 150v. (Two Section Electrolytic)
C11	Part of T1	Capacitor, 330 mmf.
C12	Part of T1	Capacitor, 330 mmf.
C13	Part of T2	Capacitor, 107 mmf.
C14	Part of T2	Capacitor, 86 mmf.
R1	39373-60	Resistor, 22,000 ohm, ½w.
R3	39373-67	Resistor, 47,000 ohm, ½w.
R4	39373-107	Resistor, 10 megohm, ½w.
R5	39373-80	Resistor, 220,000 ohm, ½w.
R6	39373-87	Resistor, 470,000 ohm, ½w.
R7	39374-13	Resistor, 100 ohm, ½w.
R8	39373-100	Resistor, 3.3 megohm, ½w.
R9	39368-14	Control, Volume (1 megohm)
R11	39374-114	Resistor, 1200 ohm, 1w.
R12	39373-84	Resistor, 330,000 ohm, ½w.
CA1	C-142769	Cable & Plug Assy., Power
L1	AB-145437	Antenna Loop & Back Assy.
L2	AW-144325	Coil, Oscillator
SW1	39369-1	Switch, Power
SP1	139631	Speaker
T1	AC-139919-4	Transformer, 1st I.F.
T2	AC-139919-5	Transformer, 2nd I.F.
T3	B-138131-1	Transformer, Output
	R-145356-3	Cabinet (10-102E)
	R-145356-1	Cabinet (10-103)
	R-145514	Cabinet (10-104W)
	W-145837	Clip, Spring
	W-131154-1	Cotter (External), Drive Shaft
	B-145121-4	Knob (10-102E)
	B-145121-5	Knob (10-103)
	B-145121-6	Knob (10-104W)
	AB-145431-1	Pointer, Dial (10-102E)
	AB-145431-2	Pointer, Dial (10-103)
	AB-145431-3	Pointer, Dial (10-104W)
	W-145391	Ring (Compression), Dial Pointer
	B-135075-11	Shaft, Dial Drive
	39462-1	Socket, Tube
	W-51752	Spring, Dial Drive Cord
	W-134916	Washer (Spring) Drive Shaft

©John F. Rider

Compliments of www.nucow.com

MODELS 10-135, 10-136E, 10-137, 10-138, 10-139, 10-140

Model No.	Color
10-135	Dulux White and Chrome
10-136E	Ebony and Gold
10-137	Chartreuse and Gold
10-138	Maroon and Gold
10-139	Aqua and Chrome
10-140	Metallic Green and Chrome

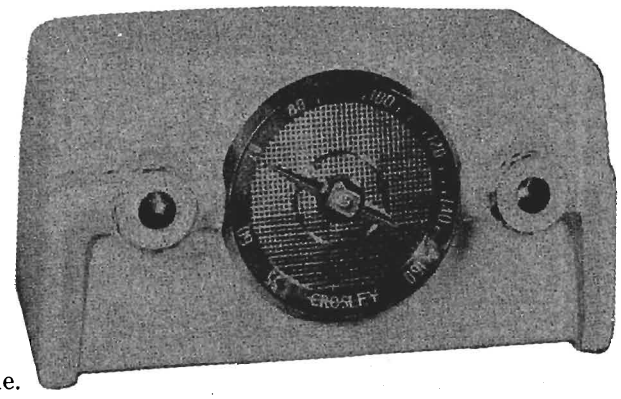

DESCRIPTION

TYPE: Five-tube, single band, Superheterodyne.

FREQUENCY RANGE: 540 to 1600 kc.

INTERMEDIATE FREQUENCY: 455 kc.

POWER SUPPLY: a.c.-d.c.

VOLTAGE RATING: 105-125 volts.

POWER CONSUMPTION: 30 watts.

POWER OUTPUT: 1 watt maximum.

TUBE COMPLEMENT

Type	Function
12BE6	Converter
12BA6 or 6BJ6	I. F. Amplifier
12AV6 or 12AT6	Detector, AVC, 1st A. F. Amplifier
50C5	A. F. Power Output
35W4	Rectifier

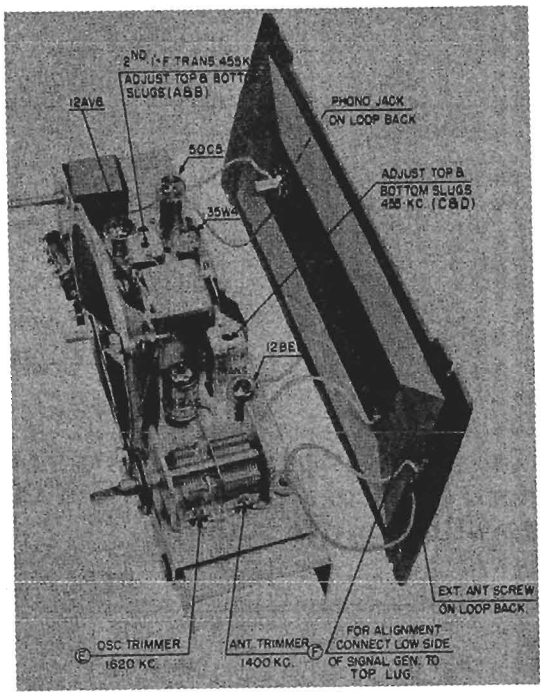

CHASSIS, TOP VIEW

When using direct current it may be necessary to reverse the position of the power plug in the electric outlet for correct polarity.

Reversing the position of the power plug when alternating current is used may reduce hum.

Under no circumstances should a ground be connected to this receiver.

Phonograph connection— To use a record player with this receiver insert the pickup plug of the record player into the Phono jack on back of receiver (this automatically switches the receiver from radio to phonograph operation). Connect the power cord of the record player to a convenient electric outlet of the correct voltage and frequency. Operate the record player in the normal manner. The controls of the receiver operate the same as for radio programs.

To again use the receiver for radio operation it is necessary to remove the pickup plug of the record player from the Phono jack.

©John F. Rider

Compliments of www.nucow.com

MODELS 10-135, 10-136, 10-137, 10-138, 10-139, 10-140

ALIGNMENT PROCEDURE

Connect an output meter across the speaker voice coil.

The r.f. signal input from the signal generator should be connected, through a 200 mmf. capacitor, to the external antenna screw. Connect the signal generator ground to the top lug on loop antenna (see Chassis Top View, page 1).

Position loop antenna to simulate its position when chassis and antenna are in cabinet.

Turn the volume control on full and adjust the signal generator output to produce approximately midscale deflection of the output meter, but maintain signal generator output as low as possible to prevent AVC action in the receiver.

ALIGNMENT CHART

Alignment adjustment locations are shown on page 1, "CHASSIS, TOP VIEW."

Alignment Sequence	Signal Generator Output			Position of Dial Pointer	Adjust for Maximum Output
	Frequency in kc.	In Series with	To		
1	455	200 mmf.	External Ant. Screw	1620	* A, B, C & D
2	1620	200 mmf.	External Ant. Screw	1620	E
3	1400	200 mmf.	External Ant. Screw	1400	F

* Repeat adjustments until maximum output is obtained.

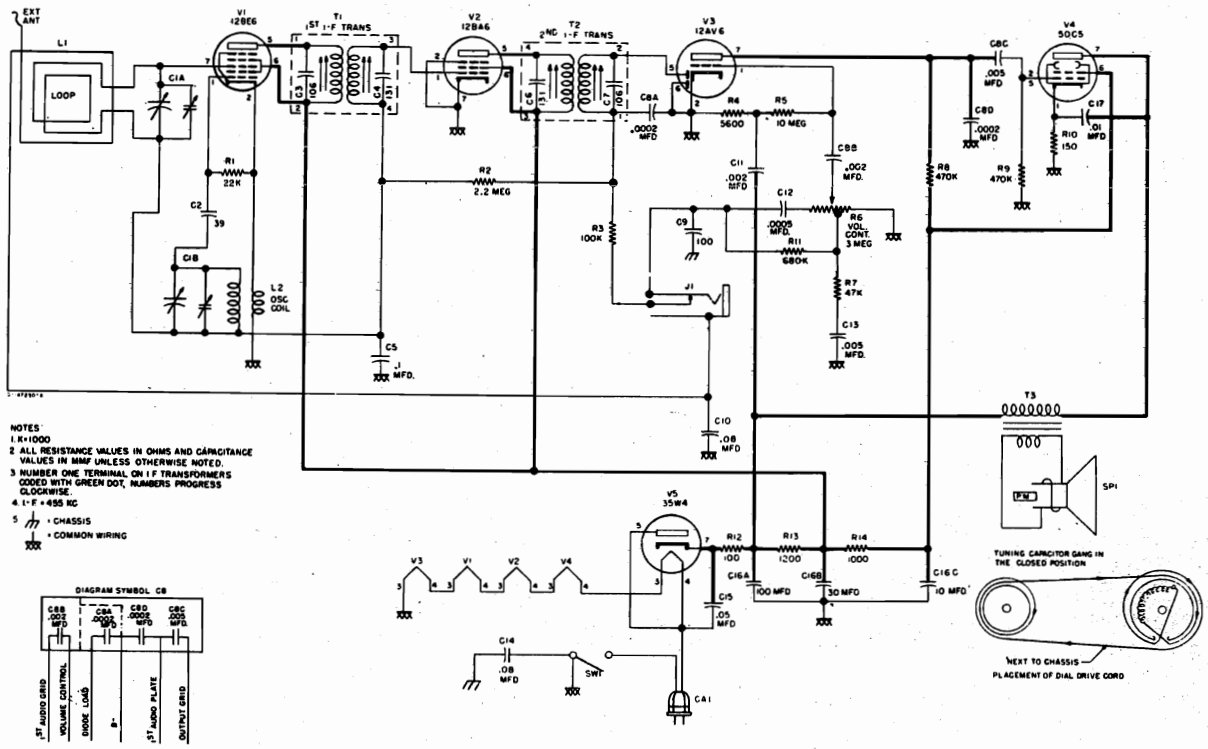

On some sets of models 10-135 to 10-140 , R2 is a 3.3 megohm, 10%, 1/2 watt resistor instead of a 2.2 megohm resistor; and because of this C5 is an .05 mfd., 600 volt paper capacitor (Part No. 39001-17).

©John F. Rider

Compliments of www.nucow.com

MODELS 10-135, 10-136,
10-137, 10-138, 10-139, 10-140

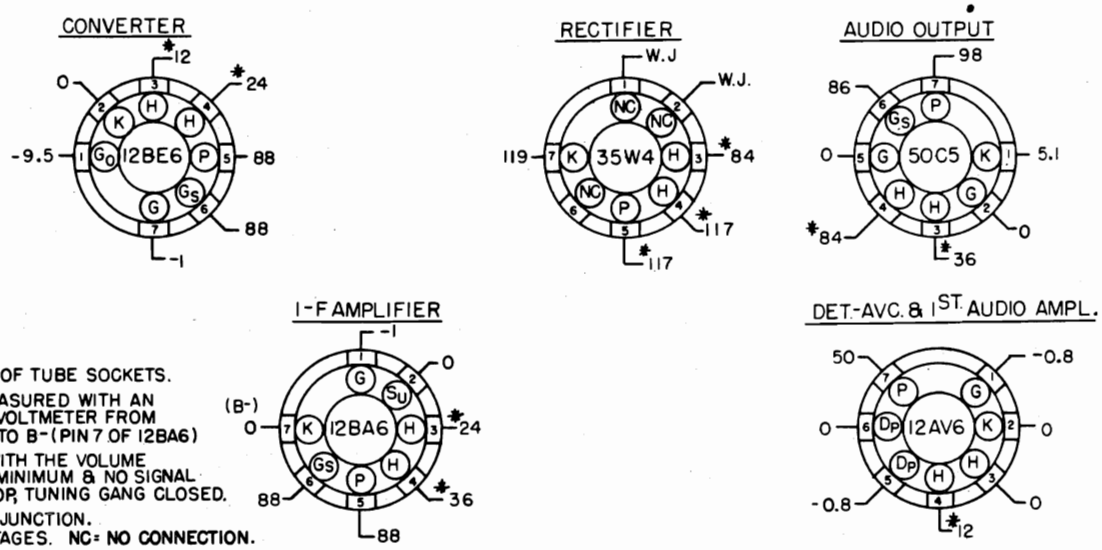

NOTES:
1. BOTTOM VIEW OF TUBE SOCKETS.
2. VOLTAGES MEASURED WITH AN ELECTRONIC VOLTMETER FROM SOCKET LUG TO B- (PIN 7 OF 12BA6)
3. MEASURED WITH THE VOLUME CONTROL AT MINIMUM & NO SIGNAL INTO THE LOOP, TUNING GANG CLOSED.
4. W.J. = WIRING JUNCTION.
   * = AC. VOLTAGES. NC = NO CONNECTION.
5. LINE VOLTAGE = 117 V., 60~AC.
6. SOCKET VOLTAGE TOLERANCE ± 10%

SOCKET VOLTAGE CHART

REPLACEMENT PARTS LIST

Symbol No.	Part No.	Description
C1A	B-147180	Capacitor, Variable } Two Section
C1B		Capacitor, Variable } Two Section
C2	C-137727-109	Capacitor, 39mmf., 10%, 200v., ceramic
C3	Part of T1	Capacitor, 106 mmf.
C4	Part of T1	Capacitor, 131 mmf.
C5	39001-19	Capacitor, .1 mfd., 600 v., paper
C6	Part of T2	Capacitor, 131 mmf.
C7	Part of T2	Capacitor, 106 mmf.
C8A	C-144675-1	Capacitor, .0002 mfd., 500v. } Four Section
C8B		Capacitor, .002 mfd., 500v. } Four Section
C8C		Capacitor, .005 mfd., 500v. } Four Section
C8D		Capacitor, .0002 mfd., 500v. } Four Section
C9	B-143686-3	Capacitor, 100 mmf., 500v., disc ceramic
C10	39001-19	Capacitor, .1 mfd., 600v., paper
C11	39001-74	Capacitor, .002 mfd., 600v., paper
C12	39001-5	Capacitor, .0005 mfd., 600v., paper
C13	39001-11	Capacitor, .005 mfd., 600., paper
C14	39001-19	Capacitor, .1 mfd., 600v., paper
C15	39001-17	Capacitor, .05 mfd., 600v., paper
C16A	B-147174	Capacitor, 100 mfd., 150v. } Three Section Electrolytic
C16B		Capacitor, 30 mfd., 150v. } Three Section Electrolytic
C16C		Capacitor, 10 mfd., 150v. } Three Section Electrolytic
C17	39001-13	Capacitor, .01 mfd., 600v., paper
R1	39373-60	Resistor, 22,000 ohm, ½w.
R2	39373-97	Resistor, 2.2 megohm, ½w.
R3	39373-74	Resistor, 100,000 ohm, ½w.
R4	39374-34	Resistor, 5600 ohm, 10%, ½w.
R5	39373-107	Resistor, 10 megohm, ½w.
R6	B-147179	Control, Volume (3 megohm, Tap 300,000 ohm)
R7	39373-67	Resistor, 47,000 ohm, ½w.
R8	39373-87	Resistor, 470,000 ohm, ½w.
R9	39373-87	Resistor, 470,000 ohm, ½w.
R10	39373-16	Resistor, 150 ohm, ½w.
R11	39373-90	Resistor, 680,000 ohm, ½w.
R12	39374-189	Resistor, 100 ohm, 10%, 2w.
R13	39374-114	Resistor, 1200 ohm, 10%, 1w.
R14	39373-33	Resistor, 1000 ohm, ½w.
CA1	C-132300-9	Cable & Plug Assy., Power
J1	W-147213	Connector, Phono
L1	AC-147239	Loop Antenna & Back Assy.
L2	AW-146323	Coil, Oscillator
SP1	AD-145956-2	Speaker (5¼" P.M.)
SW1	Part of R6	Switch, Power

Symbol No.	Part No.	Description
T1	AC-139919-3	Transformer, 1st I.F.
T2	AC-139919-3	Transformer, 2nd I.F.
T3	B-147171	Transformer, Output
	AW-147289	Cabinet (10-135)
	AW-147779	Cabinet (10-136E)
	AW-147806	Cabinet (10-137)
	AW-147807	Cabinet (10-138)
	AW-147805	Cabinet (10-139)
	AW-147848	Cabinet (10-140)
	W-139921	Clip (Mtg.)., I.F. Transformer
	W-131154-1	Cotter (External), Pointer Pulley
	W-147216	Cup (Suction) Cabinet Feet
	C-147164-1	Escutcheon, Dial (10-135)
	D-147164-2	Escutcheon, Dial (10-136E, 10-137)
	D-147164-4	Escutcheon, Dial (10-138)
	D-147164-5	Escutcheon, Dial (10-139)
	D-147164-6	Escutcheon, Dial (10-140)
	B-147192	Gasket (Rubber), Escutcheon
	B-147160	Gasket (Rubber), Speaker
	B-147161-1	Grille, Dial (10-135)
	AB-147878-1	Grille, Dial (10-136E)
	C-147161-3	Grille, Dial (10-137)
	C-147161-4	Grille, Dial (10-138)
	C-147161-5	Grille, Dial (10-139)
	C-147161-6	Grille, Dial (10-140)
	W-147245	Hanger, Wall Mtg.
	AB-147159-1	Knob (10-135)
	AB-147159-2	Knob (10-136E)
	AC-147159-3	Knob (10-137)
	AC-147159-4	Knob (10-138)
	AC-147159-5	Knob (10-139)
	AC-147159-6	Knob (10-140)
	W-147275	Mounting (Rubber), Speaker
	W-45580-2	Mounting (Rubber), Var. Capacitor
	B-94704-22	Nut (Speed), Escutcheon
	C-147149-1	Pointer, Dial (10-135, 10-139, 10-140)
	D-147149-2	Pointer, Dial (10-136E, 10-137)
	D-147149-3	Pointer, Dial (10-138)
	W-147181	Pulley, Dial Pointer
	W-142732	Shield, Tube
	39462-2	Socket, Tube
	W-51752	Spring, Drive Cord
	B-147170	Support, Pointer Pulley
	W-134916	Washer (Spring), Pointer Pulley

©John F. Rider

Compliments of www.nucow.com

MODELS 10-310, 10-311, 10-313

DESCRIPTION

TYPE: Four-tube, combination, battery Portable and a.c.-d.c. Superheterodyne with Selenium Rectifier.

FREQUENCY RANGE: 540 to 1600 kilocycles.

INTERMEDIATE FREQUENCY: 455 kc.

POWER SUPPLY: a.c.—d.c. or Battery.

VOLTAGE RATING: a.c.—d.c., 110 to 120 volts. "A" Battery, 4½ volts; "B" Battery, 90 volts.

POWER OUTPUT: 200 M.W. maximum.

POWER CONSUMPTION: 15 watts at 125 volts, 60 cycle.

"A" BATTERY: one Crosley CR-72.

"B" BATTERY: one Crosley CR-96.

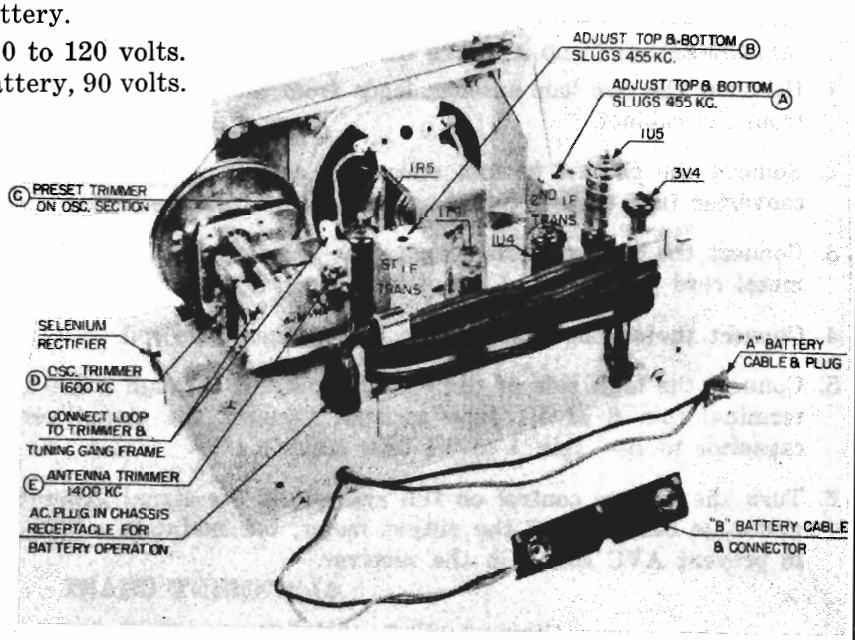

CHASSIS TOP VIEW

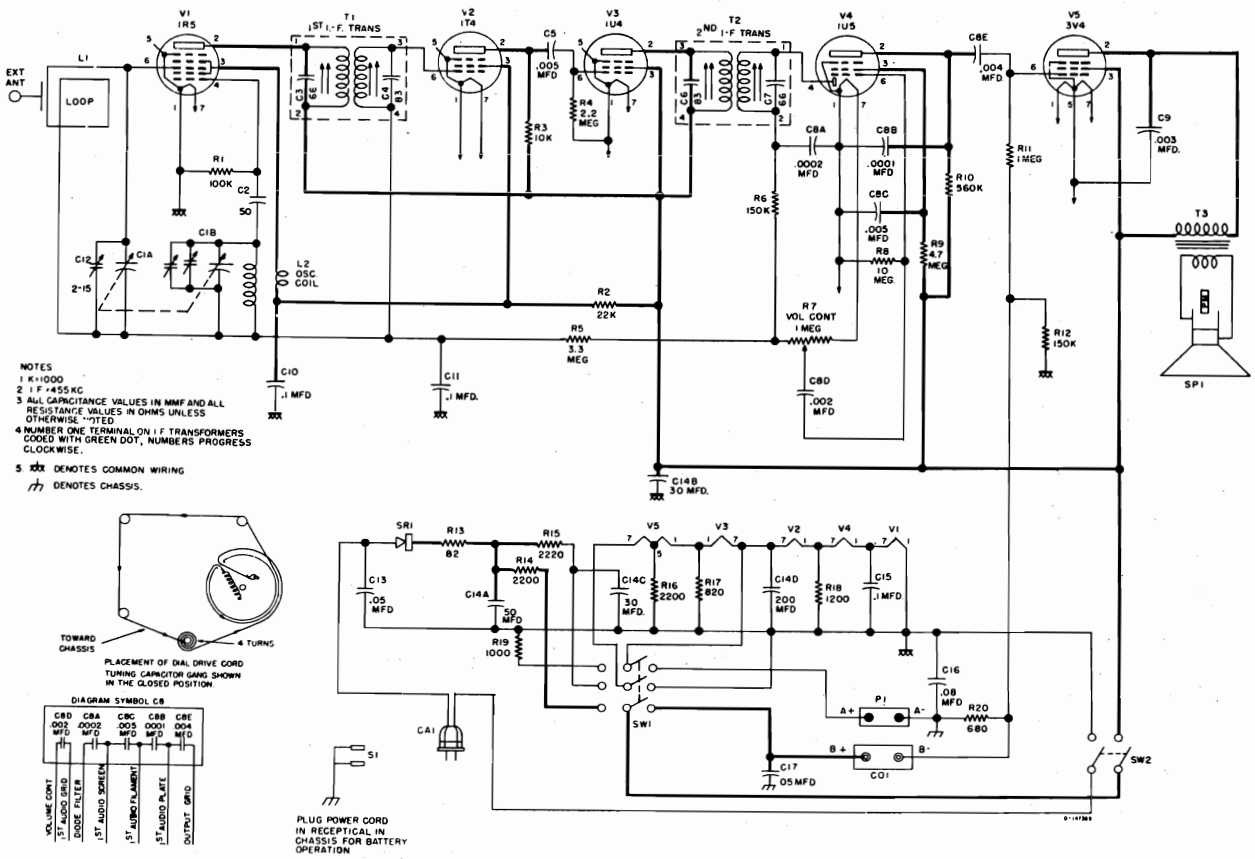

©John F. Rider

Compliments of www.nucow.com

MODELS 10-310, 10-311, 10-313

TUBE COMPLEMENT:

Type	Function
1R5	Converter
1T4	1st I.F. Amplifier
1U4	2nd I. F. Amplifier
1U5	Detector, AVC, 1st A.F. Amplifier
3V4	A.F. Power Output
	Selenium Rectifier

ALIGNMENT PROCEDURE

ALIGNMENT SHOULD ALWAYS BE MADE ON BATTERY OPERATION.

1. Unsolder the two loop antenna leads from the rear of the tuning capacitor and remove the chassis from the cabinet.
2. Remove the chassis bottom cover and connect a 33,000 ohm resistor from the grid of the 1R5 converter tube to B— (pin 6 to pin 1 of V1 tube socket).
3. Connect the battery cable plug to the receptacle on the battery. Wrap the power cord around the metal cord supports and insert the prongs of the plug into the receptacle on the chassis.
4. Connect the output meter across the speaker voice coil.
5. Connect the high side of the signal generator through a 200 mmf. capacitor to the converter grid terminal (pin 6 of V1 tube socket). Connect the signal generator ground through a .05 mfd. capacitor to B— (pin 1 of V1 tube socket).
6. Turn the volume control on full and adjust the signal generator output to produce approximately mid-scale deflection of the output meter, but maintain signal generator output as low as possible to prevent AVC action in the receiver.

ALIGNMENT CHART

Alignment adjustment locations are shown on page 1, Chassis Top View

Alignment Sequence	Signal Generator Output			Position of Dial pointer or Var. Cond.	Adjust for Maximum Output	Remarks
	Frequency in KC	In Series with	To			
1	455	200 mmf.	V1 Grid	Open	A & B	See steps 2 & 5 of Alignment procedure
2	1620	200 mmf.	V1 Grid	Open	D	See notes 1 & 2 of Alignment notes
3	1400	Radiated to Loop		1400 kc	E	See notes 3 & 4 of Alignment notes

ALIGNMENT NOTES

1. After adjusting A and B, replace the chassis bottom.
2. Preset C to ¼ turn from its closed position before adjusting D.
3. Before adjusting E remove the 33,000 ohm resistor from pins 6 and 1 of the V1 tube socket. Replace the chassis in the cabinet and connect the antenna loop (see Chassis Top View). Make certain that the battery cable and the power cord are connected for battery operation (see step 3, Alignment Procedure), and that the batteries are in place in the cabinet.
4. To obtain a radiated signal for this alignment, place the signal generator output lead near the loop antenna.

©John F. Rider

Compliments of www.nucow.com

MODELS 10-310, 10-311, 10-313

SOCKET VOLTAGE CHART

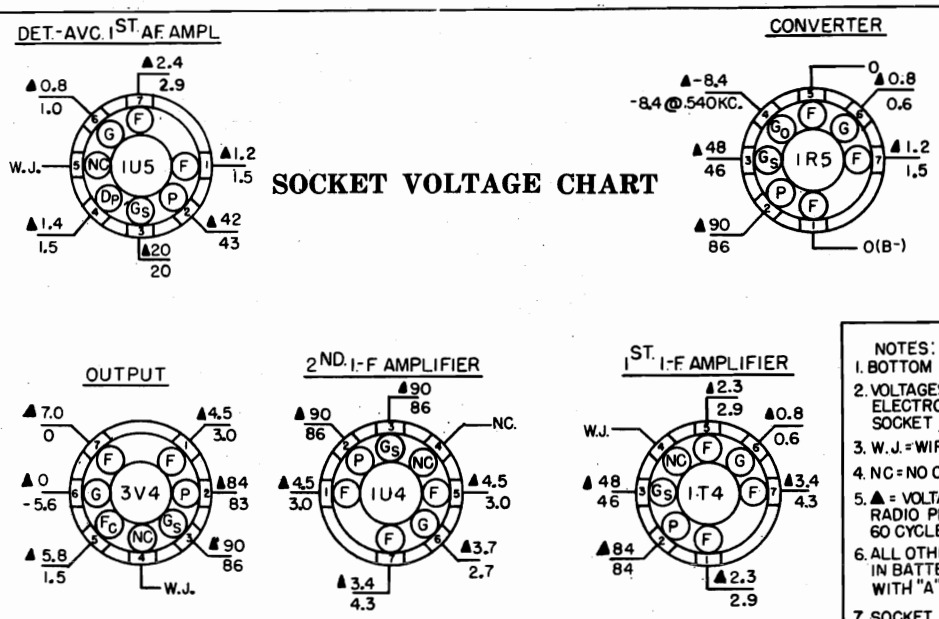

NOTES:
1. BOTTOM VIEW OF TUBE SOCKETS.
2. VOLTAGES MEASURED WITH AN ELECTRONIC VOLTMETER FROM SOCKET LUG TO B-
3. W.J. = WIRING JUNCTION.
4. NC = NO CONNECTION.
5. ▲ = VOLTAGES MEASURED WITH RADIO PLUGED INTO 117 VOLT 60 CYCLE LINE.
6. ALL OTHER VOLTAGES MEASURED IN BATTERY OPERATION POSITION WITH "A" = 4.5 VOLTS. "B" = 90 VOLTS.
7. SOCKET VOLTAGE TOLERANCE 10%

REPLACEMENT PARTS LIST

Symbol No.	Part No.	Description
C1A	AG-137073-38	Capacitor, Variable } Two Section
C1B		Capacitor, Variable } Two Section
C2	C-137727-21	Capacitor, 50 mmf., 500 v., ceramic
C3	Part of T1	Capacitor, 66 mmf.
C4	Part of T1	Capacitor, 83 mmf.
C5	39001-11	Capacitor, .005 mfd., 600 v., paper
C6	Part of T2	Capacitor, 83 mmf.
C7	Part of T2	Capacitor, 66 mmf.
C8A	C-144675-10	Capacitor, 200 mmf., 500 v. } Five Section
C8B		Capacitor, 100 mmf., 500 v. } Five Section
C8C		Capacitor, .005 mfd., 500 v. } Five Section
C8D		Capacitor, .002 mfd., 500 v. } Five Section
C8E		Capacitor, .004 mfd., 500 v. } Five Section
C9	39001-76	Capacitor, .003 mfd., 600 v., paper
C10	39001-19	Capacitor, .1 mfd., 600 v., paper
C11	39001-19	Capacitor, .1 mfd., 600 v., paper
C12	C-136327-45	Capacitor, 2-15 mmf., Trimmer
C13	39001-17	Capacitor, .05 mfd., 600 v., paper
C14A	B-145261	Capacitor, 50 mfd., 150 v. } Four Section Electrolytic
C14B		Capacitor, 30 mfd., 100 v. } Four Section Electrolytic
C14C		Capacitor, 30 mfd., 25 v. } Four Section Electrolytic
C14D		Capacitor, 200 mfd., 10 v. } Four Section Electrolytic
C15	39001-19	Capacitor, .1 mfd., 600 v., paper
C16	39001-17	Capacitor, .05 mfd., 600 v., paper
C17	39001-17	Capacitor, .05 mfd., 600 v. paper
R1	39373-74	Resistor, 100,000 ohm, ½ w.
R2	39373-60	Resistor, 22,000 ohm, ½ w.
R3	39373-54	Resistor, 10,000 ohm, ½ w.
R4	39373-97	Resistor, 2.2 megohm, ½ w.
R5	39373-100	Resistor, 3.3 megohm, ½ w.
R6	39373-77	Resistor, 150,000 ohm, ½ w.
R7	39368-14	Control, Volume (1 megohm)
R8	39373-107	Resistor, 10 megohm, ½ w.
R9	39373-102	Resistor, 4.7 megohm, ½ w.
R10	39374-58	Resistor, 560,000 ohm, ½ w., 10%
R11	39373-92	Resistor, 1 megohm, ½ w.
R12	39373-77	Resistor, 150,000 ohm, ½ w.
R13	39374-188	Resistor, 82 ohm, 2 w., 10%
R14	39373-40	Resistor, 2200 ohm, ½ w.
R15	B-144857-4	Resistor, 2220 ohm, 7 w.
R16	39373-40	Resistor, 2200 ohm, ½ w.
R17	39374-24	Resistor, 820 ohm, ½ w., 10%
R18	39374-26	Resistor, 1200 ohm, ½ w., 10%
R19	39373-33	Resistor, 1000 ohm, ½ w.
R20	39373-30	Resistor, 680 ohm, ½ w.
CA1	C-132300-8	Cable & Plug Assy., A.C-D.C. Power
CO1	W-146009	Connector Battery

Symbol No.	Part No.	Description
L1	AC-146069	Loop Assembly, Antenna
L2	AW-145006	Coil Assembly, Oscillator
S1	Part of SW1	Socket, Power Cable Plug
SR1	W-145429	Rectifier, Selenium
SW1	W-145922	Switch (T. P. D. T.)
SW2	39369-2	Switch, Power
SP1	139631	Speaker
T1	AC-139919-2	Transformer, 1st I. F.
T2	AC-139919-2	Transformer, 2nd I. F.
T3	138131-3	Transformer, Output
P1	W-136863	Plug, Battery
	D-145984-1	Back, Cabinet (10-310)
	D-145984-2	Back, Cabinet (10-311)
	D-145984-3	Back, Cabinet (10-313)
	AB-145981-2	Background Assembly, Dial
	CR72	Battery, "A" Pack
	CR96	Battery "B" Pack
	AW-145444	Bracket & Terminal Assy., Antenna
	AC-146034-1	Cabinet Assy., Complete (10-310)
	AC-146034-2	Cabinet Assy., Complete (10-311)
	AC-146034-3	Cabinet Assy., Complete (10-313)
	W-139921	Clip, I. F. Transformer
	W-146608	Clip (Tinnerman), Cabinet Back
	W-145420	Clip (Fuse Type), Cabinet Back
	W-131154-1	Cotter, External
	AW-146075	Grille Cloth & Baffle
	W-145996-2	Handle (10-313)
	W-145996-3	Handle (10-310, 10-311)
	W-145232	Hinge, Cabinet Back
	W-145933	Holder, Cabinet Handle
	B-145121-2	Knob (10-310, 10-311)
	B-145121-3	Knob (10-313)
	B-145960	Pointer, Dial
	B-135075-2	Shaft, Dial Drive
	W-142732	Shield, Tube
	W-46065	Shock Mount, Var. Cond. Mtg.
	W-145379-2	Shock Mount, Chassis Mtg.
	W-145379-3	Shock Mount, Chassis Mtg.
	39462-2	Socket, Tube
	W-145757	Spring, Dial Drive Cord
	W-145918	Spring, Cabinet Handle
	W-138136	Strip, Dial Pointer
	C-135038-78	Strip, Terminal (2¼" long; 6 Lugs)
	C-135038-18	Strip, Terminal (¾" long; 2 Lugs)
	W-136630	Stud Trimount (Chassis Bottom)
	W-134916	Washer, Spring (Dial Drive Shaft)

©John F. Rider

Compliments of www.nucow.com

MODELS 11-100U, 11-101U, 11-102U,
11-103U, 11-104U, 11-105U, Ch. 301

Model No.	Color
11-100U	White
11-101U	Blue
11-102U	Green
11-103U	Red
11-104U	Ebony
11-105U	Chartreuse

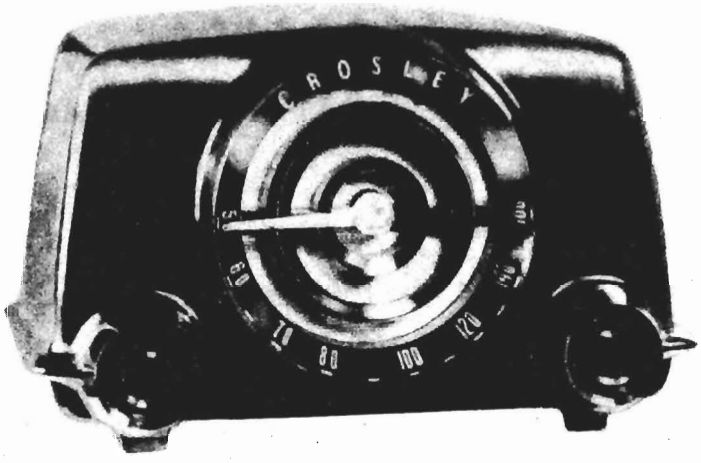

DESCRIPTION

TYPE: Five-tube, single band, Superheterodyne.

FREQUENCY RANGE: 540 to 1600 kc.

INTERMEDIATE FREQUENCY: 455 kc.

POWER SUPPLY: a.c.-d.c.

VOLTAGE RATING: 105-125 volts.

POWER CONSUMPTION: 30 watts.

POWER OUTPUT: 1.5 watts maximum.

TUBE COMPLEMENT

Type	Function
12BE6	Converter
12BA6	I. F. Amplifier
12AV6	Detector, AVC, 1st A.F. Amplifier
50C5	A.F. Power Output
35W4	Rectifier

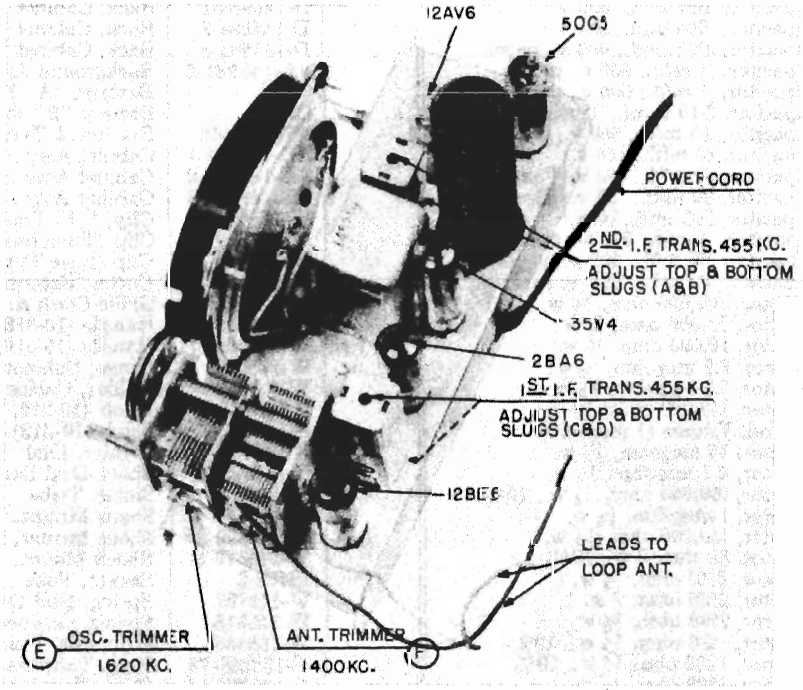

CHASSIS, TOP VIEW

©John F. Rider

Compliments of www.nucow.com

When using direct current it may be necessary to reverse the position of the power plug in the electric outlet for correct polarity.

Reversing the position of the power plug when alternating current is used may reduce hum.

Under no circumstances should a ground be connected to this receiver.

ALIGNMENT PROCEDURE

1. Connect an output meter across the speaker voice coil.
2. The r.f. signal input from the signal generator should be connected as indicated in the alignment chart. Connect the signal generator ground through a 0.1 mfd. condenser to B - (pin 2 on 12BA6 tube socket).
3. Turn the volume control on full and adjust the signal generator output to produce approximately midscale deflection of the output meter, but maintain signal generator output as low as possible to prevent AVC action in the receiver.

ALIGNMENT CHART

Alignment adjustment locations are shown on page 1, "CHASSIS, TOP VIEW."

Alignment Sequence	Signal Generator Output			Position of Dial pointer	Adjust for Maximum Output
	Frequency in KC	In Series with	To		
1	455	200 mmf.	High Side of Loop	1620	A, B, C & D (See Note 1.)
2	1620	Radiated to Loop		1620	E (See Note 2.)
3	1400	Radiated to Loop		Tune to Signal	F (See Note 2.)

ALIGNMENT NOTES

1. Repeat adjustments (A, B, C & D) in sequence, until maximum output is obtained.
2. Place signal generator output lead near the loop antenna. The loop antenna must be positioned with respect to the chassis to simulate its position when chassis and loop are fastened in cabinet.

©John F. Rider

Compliments of www.nucow.com

MODELS 11-100U, 11-101U, 11-102U,
11-103U, 11-104U, 11-105U, Ch. 301

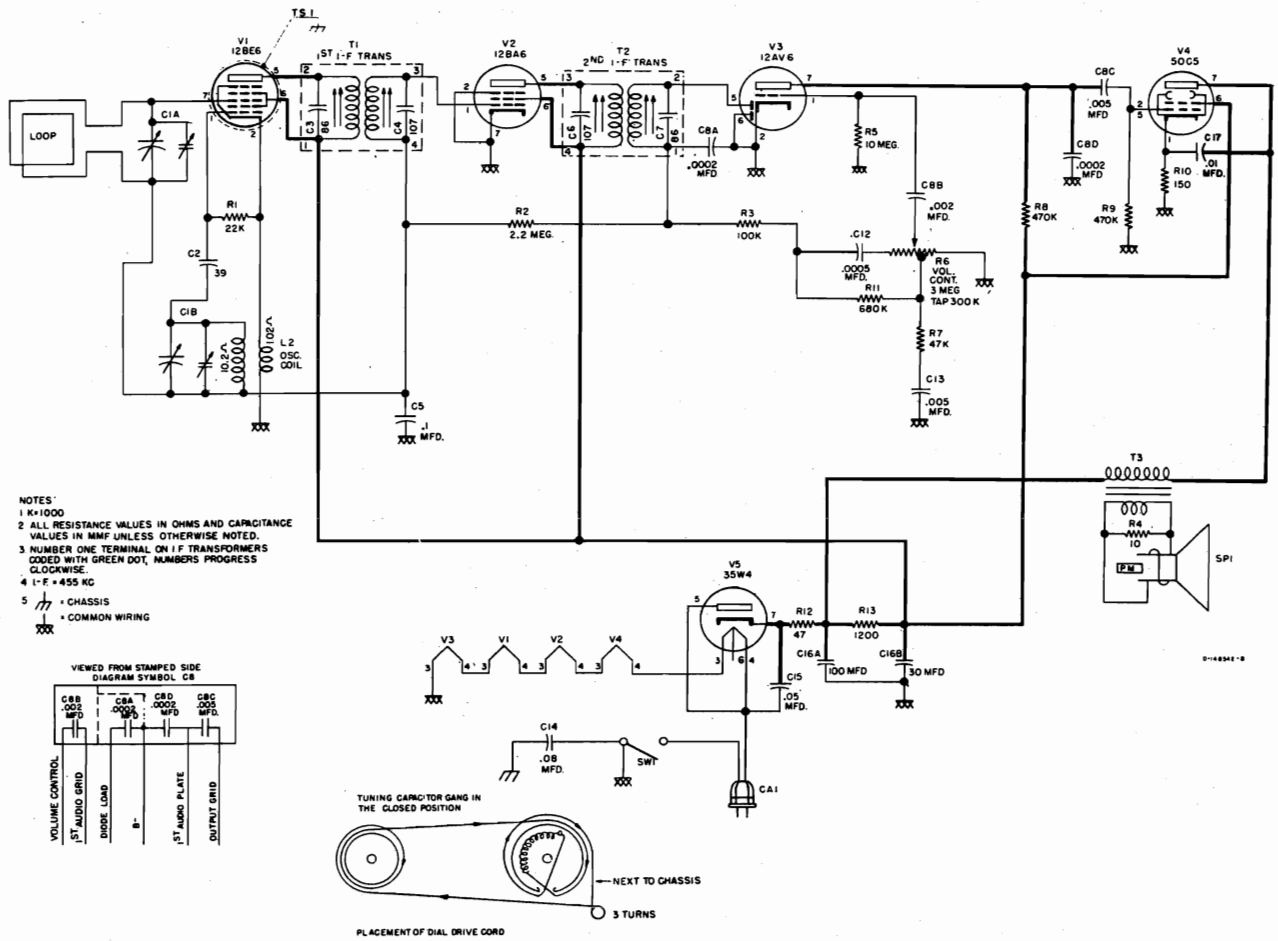

SCHEMATIC DIAGRAM

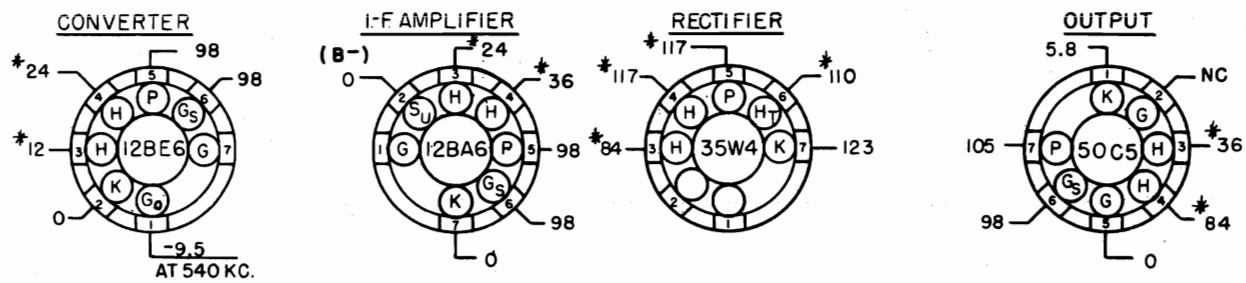

NOTES:
1. BOTTOM VIEW OF TUBE SOCKETS.
2. MEASURE VOLTAGE WITH AN ELECTRONIC VOLTMETER FROM SOCKET LUG TO B− PIN 2 ON THE 12BA6.
3. LINE VOLTAGE 117 V. 60~
4. NC. = NO CONNECTION.
5. * = AC. VOLTAGE
6. SOCKET VOLTAGE TOLERANCE ±10%.

DET-AVC.-1ST AUDIO AMPL.

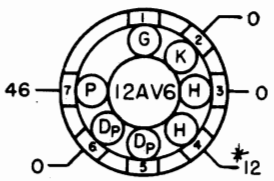

SOCKET VOLTAGE CHART

©John F. Rider

Compliments of www.nucow.com

MODELS 11-100U, 11-101U, 11-102U, 11-103U, 11-104U, 11-105U, Ch. 301

REPLACEMENT PARTS LIST

Symbol No.	Part No.	Description
C1A	B-148350	Capacitor, Variable } Two Section
C1B		Capacitor, Variable }
C2	C-137727-109	Capacitor, 39 mmf., 10%, 200 v., ceramic
C3	Part of T1	Capacitor, 86 mmf.
C4	Part of T1	Capacitor, 107 mmf.
C5	39001-19	Capacitor, .1 mfd., 600 v., paper
C6	Part of T2	Capacitor, 107 mmf.
C7	Part of T2	Capacitor, 86 mmf.
C8A	C-144675-1	Capacitor, .0002 mfd., 500 v. } Four Section disc ceramic
C8B		Capacitor, .002 mfd., 500 v. }
C8C		Capacitor, .005 mfd., 500 v. }
C8D		Capacitor, .0002 mfd., 500 v. }
C12	39001-5	Capacitor, .0005 mfd., 600 v., paper
C13	39001-11	Capacitor, .005 mfd., 600 v., paper
C14	39001-85	Capacitor, .08 mfd., 600 v., paper
C15	39001-17	Capacitor, .05 mfd., 600 v., paper
C16A	B-148357	Capacitor, 100 mfd., 150 v. } Two Section Electrolytic
C16B		Capacitor, 30 mfd., 150 v. }
C17	39001-13	Capacitor, .01 mfd., 600 v., paper
R1	39373-60	Resistor, 22,000 ohm, ½ w.
R2	39373-97	Resistor, 2.2 megohm, ½ w.
R3	39373-74	Resistor, 100,000 ohm, ½ w.
R4	39373-1	Resistor, 10 ohm, ½ w.
R5	39373-107	Resistor, 10 megohm, ½ w.
R6	B-148327	Control, Volume (3 megohm, Tap 300,000 ohm)
R7	39373-67	Resistor, 47,000 ohm, ½ w.
R8	39373-87	Resistor, 470,000 ohm, ½ w.
R9	39373-87	Resistor, 470,000 ohm, ½ w.
R10	39373-16	Resistor, 150 ohm, ½ w.
R11	39373-90	Resistor, 680,000 ohm, ½ w.
R12	39374-97	Resistor, 47 ohm, 10%, 1 w.
R13	39374-114	Resistor, 1200 ohn, 10%, 1 w.
CA1	C142769-1	Cable & Plug Assy., Power
L1	C-148399	Loop & Back Assy.
L2	AW-148259	Coil, Oscillator
SP1	AD-148400	Speaker
SW1	Part of R6	Switch, Power
TS1	W-147784	Shield, Tube (V1)
T1	C-139919-5	Transformer, 1st I.F.
T2	C-139919-5	Transformer, 2nd I.F.
T3	138131-1	Transformer, Output
	AB-148406-1	Baffle & Grille Cloth Assy.
	AB-148465-1	Cabinet (11-100U)
	AB-148465-2	Cabinet (11-101U)
	AB-148465-3	Cabinet (11-102U)
	AB-148465-4	Cabinet (11-103U)
	R-148273-3	Cabinet (11-104U)
	AB-148465-6	Cabinet (11-105U)
	W-148434	Clip, I.F. Transformer Mtg.
	W-131154-1	Cotter (External), Tuning Shaft
	B-148364	Gasket, Speaker
	W-148390	Grommet (3 used), chassis
	B-148318-1	Knob (11-100U)
	B-148318-2	Knob (11-101U)
	B-148318-3	Knob (11-102U)
	B-148318-4	Knob (11-103U)
	B-147318-5	Knob (11-104U)
	B-148318-6	Knob (11-105U)
	B-94704-7	Nut (Push On), Grille Cloth Mtg.
	B-148320	Pointer, Dial
	39176-59	Screw, Chassis Mtg.
	W-148379	Shaft, Tuning
	AW-148806	Shaft & Pulley Assy., Pointer
	39462-2	Socket, Tube
	W-148469	Spring (Retainer), Pointer Pulley
	W-51752	Spring, Drive Cord
	AB-148362	Support & Bushing Assy., Pointer Pulley
	W-134916	Washer (Spring), Tuning Shaft

Slipping of dial drive cords on these models can be corrected by replacing the drive cord with a cord long enough to permit it to be wrapped around the drive shaft four turns instead of three turns.

If necessary, place a 1/16" thick #6 flat washer on each screw that mounts the tuning capacitor. The washer should be placed between the rubber grommet eyelet and the capacitor frame. When the mounting screws are drawn tight, the eyelet will then flatten enough to reduce the flexibility of the grommet. This will hold the capacitor rigid and prevent the cord from becoming loose when the drive shaft is rotated.

In addition to the recommendations in the original service instruction it is sometimes necessary to replace the drive shaft with new shaft (part Number 148379). This new shaft does not have a groove for the drive cord.

On some sets of models 11-100U to 11-109U, R2 is a 3.3 megohm, 10%, 1/2 watt resistor instead of a 2.2 megohm resistor; and because of this C5 is an .05 mfd., 600 volt paper capacitor (Part No. 39001-17).

©John F. Rider

Compliments of www.nucow.com

MODELS 11-301U, 11-302U,
11-303U, 11-304U, 11-305U,
Ch. 303

Model No.	Cabinet	Lid
11-301U	New Brunswick Blue	Salvador Blue
11-302U	Meadow Green	Sea
11-303U	Fez Red	Sport Beige
11-304U	Brown	Tan
11-305U	Ebony	Ebony

DESCRIPTION

TYPE: Four-tube, combination, battery Portable and a.c.-d.c. Superheterodyne with Selenium Rectifier.

FREQUENCY RANGE: 540 to 1600 kilocycles.

INTERMEDIATE FREQUENCY: 455 kc.

POWER SUPPLY: a.c.-d.c. or Battery.

VOLTAGE RATING: a.c.-d.c., 110 to 120 volts. "A" Battery, 1½ volts; "B" Battery, 67½ volts.

POWER OUTPUT: 200 M.W. maximum.

POWER CONSUMPTION: 15 watts at 125 volts, 60 cycle.

"A" BATTERY: One leak resistant "D" cell.

"B" BATTERY: One Crosley CR-88.

TUBE COMPLEMENT:

Type	Function
1R5	Converter
1U4	1st I.F. Amplifier
1U5	Detector, AVC, 1st A.F. Amplifier
3V4	A.F. Power Output
	Selenium Rectifier

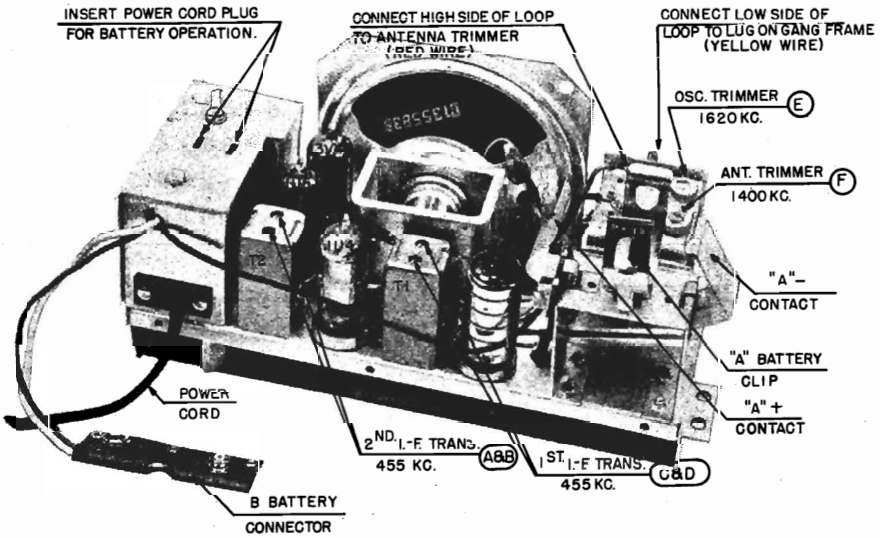

CHASSIS TOP VIEW

©John F. Rider

Compliments of www.nucow.com

MODELS 11-301U, 11-302U, 11-303U, 11-304U, 11-305U, Ch. 303

NOTES:
1. BOTTOM VIEW OF TUBE SOCKETS.
2. VOLTAGES MEASURED WITH AN ELECTRONIC VOLTMETER FROM SOCKET LUG TO (B-)
3. W. J. = WIRING JUNCTION.
4. N.C. = NO CONNECTION.
5. ▲ = VOLTAGES MEASURED WITH RADIO PLUGED INTO 117 V. 60 CYCLE LINE.
6. ALL OTHER VOLTAGES MEASURED IN BATTERY OPERATION POSITION WITH "A" = 1.45 VOLTS, "B" = 67 1/2 VOLTS.
7. SOCKET VOLTAGE TOLERANCE ± 10%.

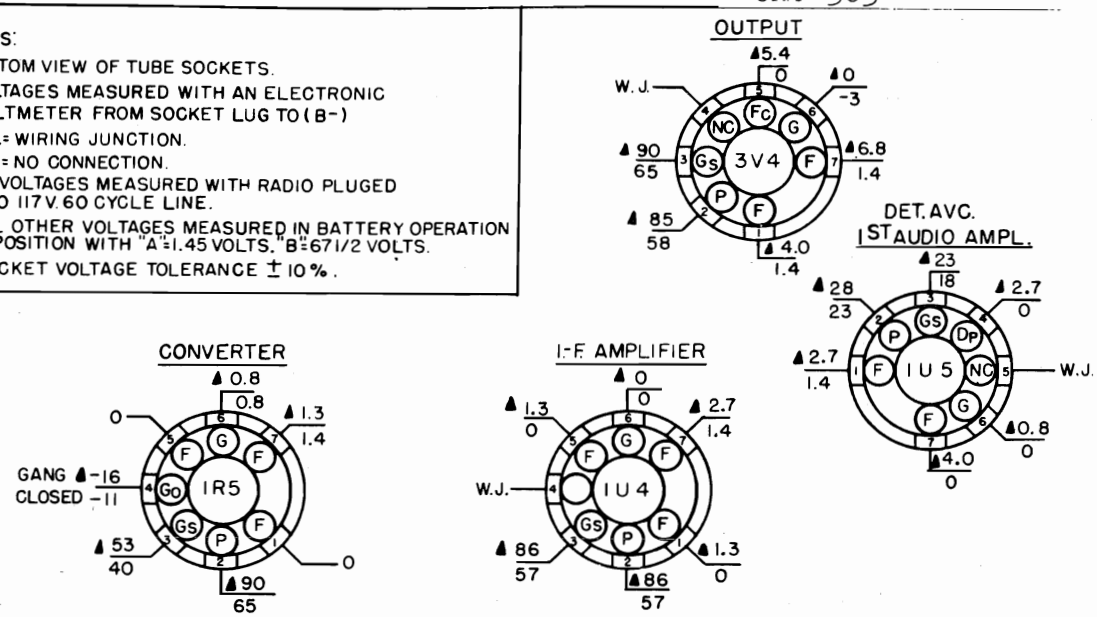

SOCKET VOLTAGE CHART

(For sets built as shown by solid lines in Schematic Wiring Diagram)

When using direct current it may be necessary to reverse the position of the power plug in the electric outlet for correct polarity.

Reversing the position of the power plug when alternating current is used may reduce hum.

Under no circumstances should a ground be connected to this receiver.

ALIGNMENT PROCEDURE

1. Alignment should be made with the receiver connected to the power line (not in battery operation position).

2. Connect output meter across speaker voice coil (3.2 ohms).

3. With the cabinet front lid open all the way, radiate an R-F signal modulated 30% at 400 cycles to the receiver by placing the output lead from the high side of the signal generator close to the loop antenna in the lid.

4. Turn the volume control to maximum and adjust the signal generator to produce mid-scale deflection of the output meter, but maintain generator output as low as possible to prevent AVC action.

ALIGNMENT CHART

Alignment Sequence	Signal Generator		Position of Tuning Gang or Dial pointer	Adjust for Max. Output	Remarks
	Freq in KC	Output			
1	455	Radiated to Loop	Open	A, B, C & D	See Note
2	1620	Radiated to Loop	Open	E	
3	1400	Radiated to Loop	Tune in Signal	F	

ALIGNMENT NOTE

Repeat adjustment of A, B, C, & D until maximum output is obtained.

©John F. Rider

Compliments of www.nucow.com

MODELS 11-301U, 11-302U, 11-303U, 11-304U, 11-305U, Ch. 303

SCHEMATIC DIAGRAM

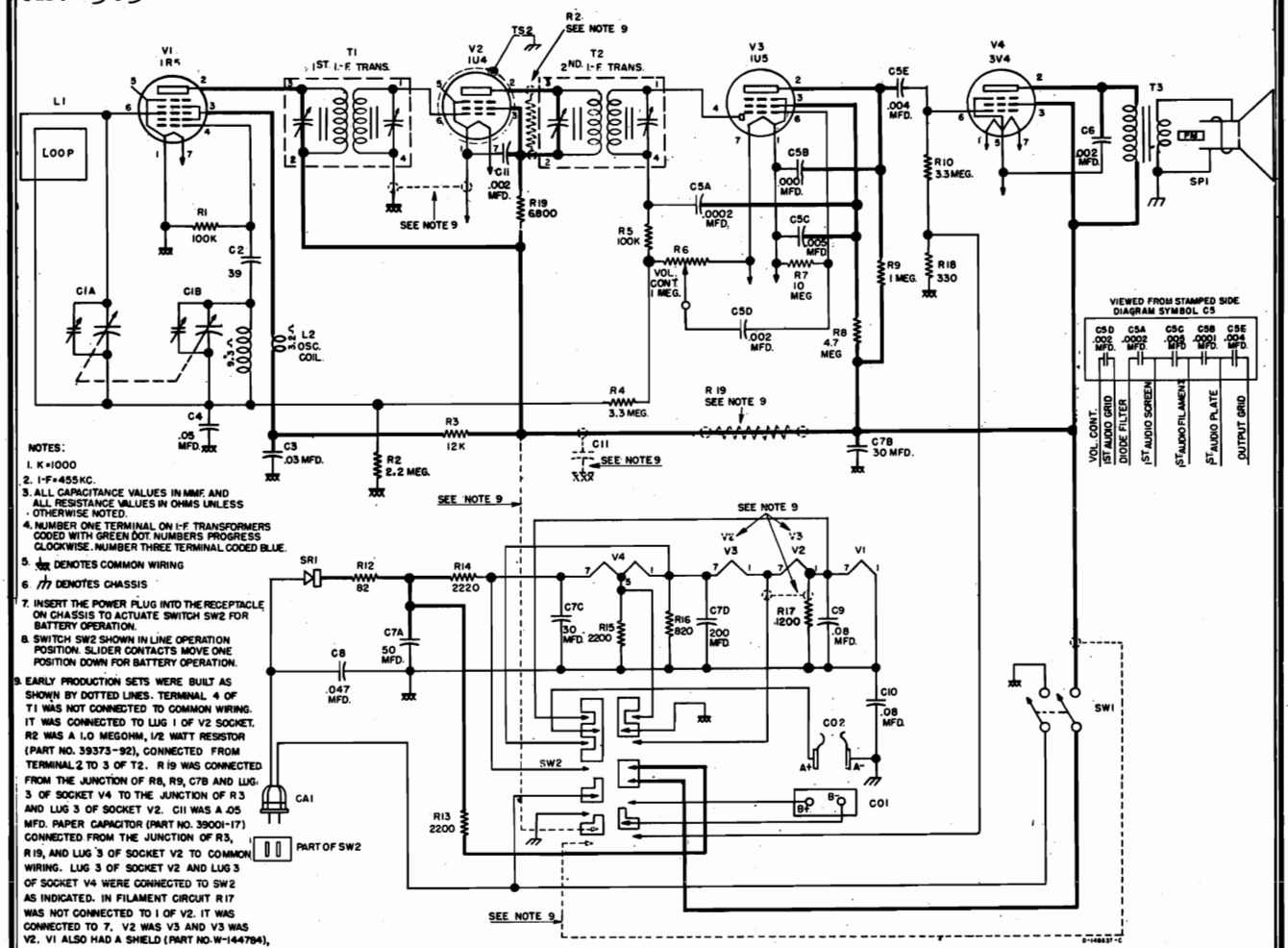

NOTES:

1. K=1000
2. I-F=455KC.
3. ALL CAPACITANCE VALUES IN MMF. AND ALL RESISTANCE VALUES IN OHMS UNLESS OTHERWISE NOTED.
4. NUMBER ONE TERMINAL ON I-F TRANSFORMERS CODED WITH GREEN DOT. NUMBERS PROGRESS CLOCKWISE. NUMBER THREE TERMINAL CODED BLUE.
5. ⏚ DENOTES COMMON WIRING
6. ⏚ DENOTES CHASSIS
7. INSERT THE POWER PLUG INTO THE RECEPTACLE ON CHASSIS TO ACTUATE SWITCH SW2 FOR BATTERY OPERATION.
8. SWITCH SW2 SHOWN IN LINE OPERATION POSITION. SLIDER CONTACTS MOVE ONE POSITION DOWN FOR BATTERY OPERATION.
9. EARLY PRODUCTION SETS WERE BUILT AS SHOWN BY DOTTED LINES. TERMINAL 4 OF T1 WAS NOT CONNECTED TO COMMON WIRING. IT WAS CONNECTED TO LUG 1 OF V2 SOCKET. R2 WAS A 1.0 MEGOHM, 1/2 WATT RESISTOR (PART NO. 39373-92), CONNECTED FROM TERMINAL 2 TO 3 OF T2. R19 WAS CONNECTED FROM THE JUNCTION OF R8, R9, C7B AND LUG 3 OF SOCKET V4 TO THE JUNCTION OF R3 AND LUG 3 OF SOCKET V2. C11 WAS A .05 MFD. PAPER CAPACITOR (PART NO. 39001-17) CONNECTED FROM THE JUNCTION OF R3, R19, AND LUG 3 OF SOCKET V2 TO COMMON WIRING. LUG 3 OF SOCKET V2 AND LUG 3 OF SOCKET V4 WERE CONNECTED TO SW2 AS INDICATED. IN FILAMENT CIRCUIT R17 WAS NOT CONNECTED TO 1 OF V2. IT WAS CONNECTED TO 7. V2 WAS V3 AND V3 WAS V2. V1 ALSO HAD A SHIELD (PART NO. W-144784), THE SAME AS V2. REVISING AN EARLY PRODUCTION SET TO A LATER PRODUCTION SET, AS SHOWN BY THE SOLID LINES IN SCHEMATIC WIRING DIAGRAM, IMPROVES ITS SENSITIVITY AND STABILITY.

NOTES:

1. BOTTOM VIEW OF TUBE SOCKETS.
2. VOLTAGES MEASURED WITH AN ELECTRONIC VOLTMETER FROM SOCKET LUG TO (B-)
3. W. J. = WIRING JUNCTION.
4. N.C. = NO CONNECTION.
5. ▲ = VOLTAGES MEASURED WITH RADIO PLUGED INTO 117 V. 60 CYCLE LINE.
6. ALL OTHER VOLTAGES MEASURED IN BATTERY OPERATION POSITION WITH "A" = 1.45 VOLTS. "B" = 67 1/2 VOLTS.
7. SOCKET VOLTAGE TOLERANCE ± 10%.

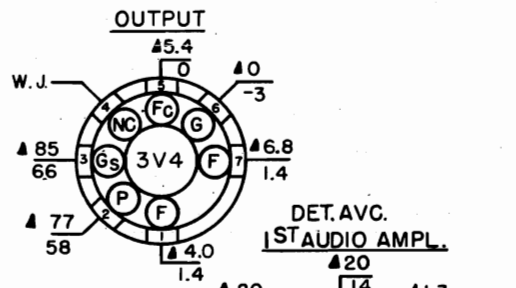

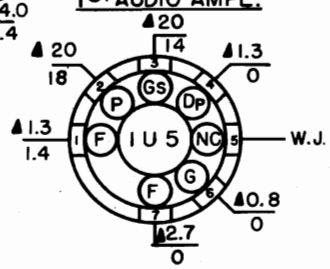

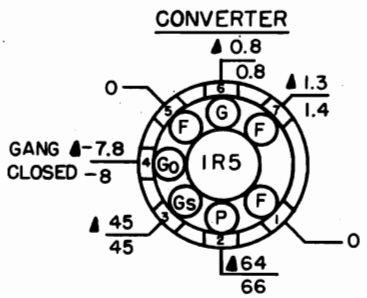

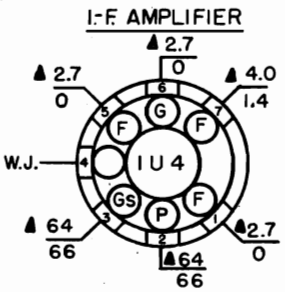

SOCKET VOLTAGE CHART

(For sets built as shown by dotted lines in Schematic Wiring Diagram)

©John F. Rider

Compliments of www.nucow.com

MODELS 11-301U, 11-302U, 11-303U, 11-304U, 11-305U, Ch. 303

REPLACEMENT PARTS LIST

Symbol No.	Part No.	Description
C1A	B-148204	Capacitor, Variable } Two Section
C1B		Capacitor, Variable }
C2	C-137727-109	Capacitor, 39 mmf., 10%, 200 v., ceramic
C3	39001-82	Capacitor, .03 mfd., 600 v., paper
C4	39001-17	Capacitor, .05 mfd., 600 v., paper
C5A	C-144675-10	Capacitor, .0002 mfd., 500 v. } Five Section disc ceramic
C5B		Capacitor, .0001 mfd., 500 v. }
C5C		Capacitor, .0005 mfd., 500 v. }
C5D		Capacitor, .002 mfd., 500 v. }
C5E		Capacitor, .004 mfd., 500 v. }
C6	C-144675-16	Capacitor, .002 mfd., + 100%—0%, 500 v., disc ceramic
C7A	B-148246	Capacitor, 50 mfd., 150 v. } Four Section Electrolytic
C7B		Capacitor, 30 mfd., 100 v. }
C7C		Capacitor, 30 mfd., 25 v. }
C7D		Capacitor, 200 mfd., 10 v. }
C8	39477-45	Capacitor, .047 mfd., 600 v., paper
C9	39001-85	Capacitor, .08 mfd., 600 v., paper
C10	39001-85	Capacitor, .08 mfd., 600 v., paper
C11	C-144675-16	Capacitor, .002 mfd., 500 v., disc ceramic
R1	39373-74	Resistor, 100,000 ohm, ½ w.
R2	39373-97	Resistor, 2.2 megohm, ½ w.
R3	39374-38	Resistor, 12,000 ohm, 10%, ½ w.
R4	39373-100	Resistor, 3.3 megohm, ½ w.
R5	39373-74	Resistor, 100,000 ohm. ½ w.
R6	B-148240	Control, Volume (1 megohm)
R7	39373-107	Resistor, 10 megohm, ½ w.
R8	39374-77	Resistor, 4.7 megohm, 10%, ½ w.
R9	39374-61	Resistor, 1 megohm, 10%, ½ w.
R10	39373-100	Resistor, 3.3 megohm, ½ w.
R12	39374-188	Resistor, 82 ohm, 10%, 2 w.
R13	39373-40	Resistor, 2200 ohm, ½ w.
R14	B-144857-4	Resistor, 2220 ohm, 5%, 7 w.
R15	39373-40	Resistor, 2200 ohm, ½ w.
R16	39374-24	Resistor, 820 ohm, 10%, ½ w.
R17	39374-26	Resistor, 1200 ohm, 10%, ½ w.
R18	39374-19	Resistor, 330 ohm, 10%, ½ w.
R19	39373-51	Resistor, 6800 ohm, ½ w.
L1		Loop (Part of Lid Assy.)
L2	AW-148420	Coil, Oscillator
T1	C-148449	Transformer, 1st I.F.
T2	C-148449	Transformer, 2nd I.F.
T3	B-148328	Transformer, Output
SW1	B-148392	Switch, Off-On (Power)
SW2	B-148330	Switch, Battery A.C.
SP1	C-148852	Speaker
SR1	W-145429	Rectifier, Selenium
CA1	C-132300-8	Cable & Plug Assy., Power
CO1	W-148414	Connector, "B" Battery
CO2	AB-148062	Support Assembly, Battery

Symbol No.	Part No.	Description
TS2	W-144784	Shield, Tube (V2)
	148875	Antenna & Lid Assy. (11-301U)
	148876	Antenna & Lid Assy. (11-302U)
	148877	Antenna & Lid Assy. (11-303U)
	148878	Antenna & Lid Assy. (11-304U)
	148879	Antenna & Lid Assy. (11-305U)
	AW-149752-1	Bracket (R.H.) Handle
	AW-149752-2	Bracket (L.H.) Handle
	B-148034	Bottom, Chassis
	AD-148370	Bottom Assy., Cabinet
	D-148192-1	Cabinet & Lid Assy. (11-301U)
	D-148192-2	Cabinet & Lid Assy. (11-302U)
	D-148192-3	Cabinet & Lid Assy. (11-303U)
	D-148192-4	Cabinet & Lid Assy. (11-304U)
	D-148192-5	Cabinet & Lid Assy. (11-305U)
	W-148103	Catch, Cabinet Lid
	AC-148443	Grille & Baffle Assy.
	W-148390	Grommet (3 used), Chassis
	W-148107	Guide, Cabinet Lid Catch
	B-147997	Handle
	B-148232-1	Knob, Volume (11-301U)
	B-148233-1	Knob, Tuning (11-301U)
	B-148232-2	Knob, Volume (11-302U)
	B-148233-2	Knob Tuning (11-302U)
	B-148232-3	Knob, Volume (11-303U)
	B-148233-3	Knob, Tuning (11-303U)
	B-148232-4	Knob, Volume (11-304U, 11-305U)
	B-148233-4	Knob, Tuning (11-304U, 11-305U)
	W-148218	Nut (Elastic Stop), Lid Catch Slide
	W-94701-4	Nut (Push-On), Cabinet Trim
	AW-148424	Pointer, Dial
	W-148366-1	Push Button, Off-On (11-301U)
	W-148366-2	Push Button, Off-On (11-302U)
	W-148366-3	Push Button, Off-On (11-303U)
	W-148366-4	Push Button, Off-On (11-304U,11-305U)
	39178-55	Screw, Chassis Mtg.
	39178-28	Screw, Handle
	39178-28	Screw, Cabinet Bottom
	39178-28	Screw, Grille & Baffle Assy.
	W-147784	Shield, Tube
	W-148108	Slide, Cabinet Lid Catch
	W-148346	Socket, Tube
	W-148054	Spacer, Speaker
	W-148523	Spring, Push Button
	W-148111	Spring, Cabinet Lid Catch
	W-148042	Support, Speaker
	B-148082	Trim, Cabinet Lid
	C-148110	Trim, Cabinet
	W-148248	Trimount Stud, Handle
	W-148206-2	Washer (Spring), Lid Catch Slide

Handles pulling off may be prevented by replacing the original equipment handle brackets with the new type that has a rivet brazed to the bracket. The R. H. Bracket part number is AW-149752-1 and the L. H. Bracket number is AW-149752-2.

On some sets of models 11-301U to 11-305U, R2 is a 3.3 megohm resistor instead of 2.2 megohm resistor. In these sets the .05 mfd. capacitor is identified by symbol No. C4. Since this was already a .05 mfd. capacitor, no change was necessary when R2 was substituted.

©John F. Rider

Compliments of www.nucow.com

MODELS 11-106U, 11-107U,
11-108U, 11-109U, Ch. 302

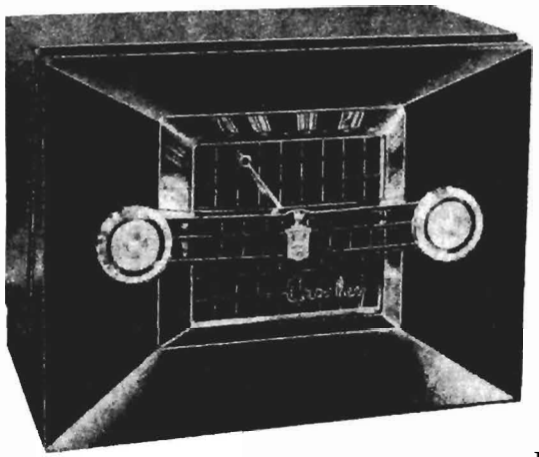

Model No.	Color
11-106U	Nubian Black
11-107U	Bahama Beige
11-108U	Royal Burgundy
11-109U	Hunter Green

DESCRIPTION

TYPE: Five-tube, single band, Superheterodyne.

FREQUENCY RANGE: 540 to 1600 kc.

INTERMEDIATE FREQUENCY: 455 kc.

POWER SUPPLY: a.c.-d.c.

VOLTAGE RATING: 105-125 volts.

POWER CONSUMPTION: 30 watts maximum.

POWER OUTPUT: 1 watt maximum.

TUBE COMPLEMENT:

Type	Function
12BE6	Converter
12BA6	I.F. Amplifier
*12AV6	Detector, AVC, 1st A.F. Amplifier
50C5	A.F. Power Output
35W4	Rectifier

* Some sets are equipped with a 12SQ7GT tube.

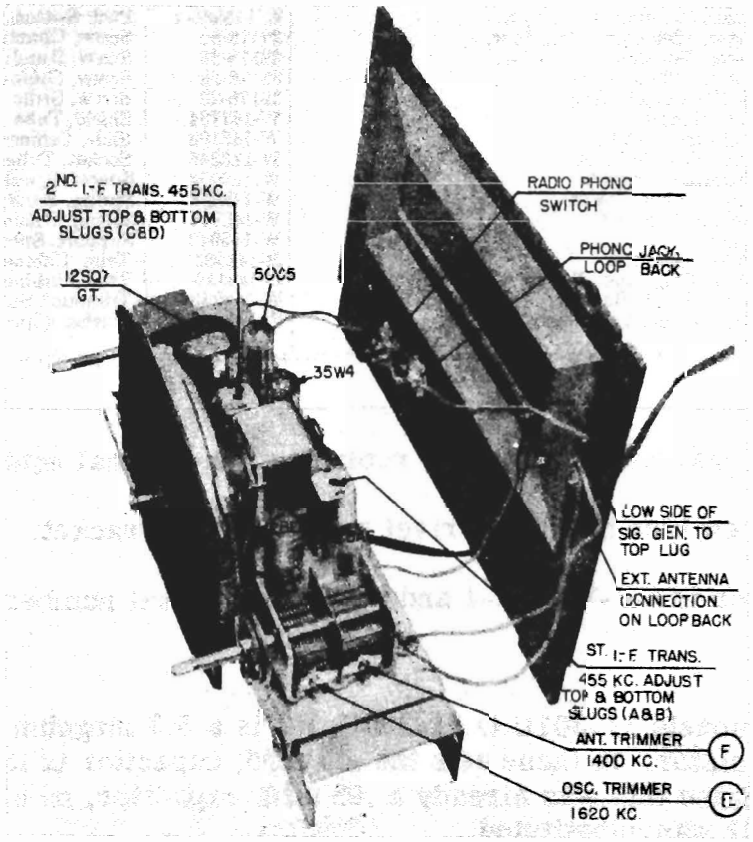

CHASSIS, TOP VIEW (Sets equipped with 12AV6 Tube)

©John F. Rider

Compliments of www.nucow.com

MODELS 11-106U, 11-107U, 11-108U, 11-109U, Ch. 302

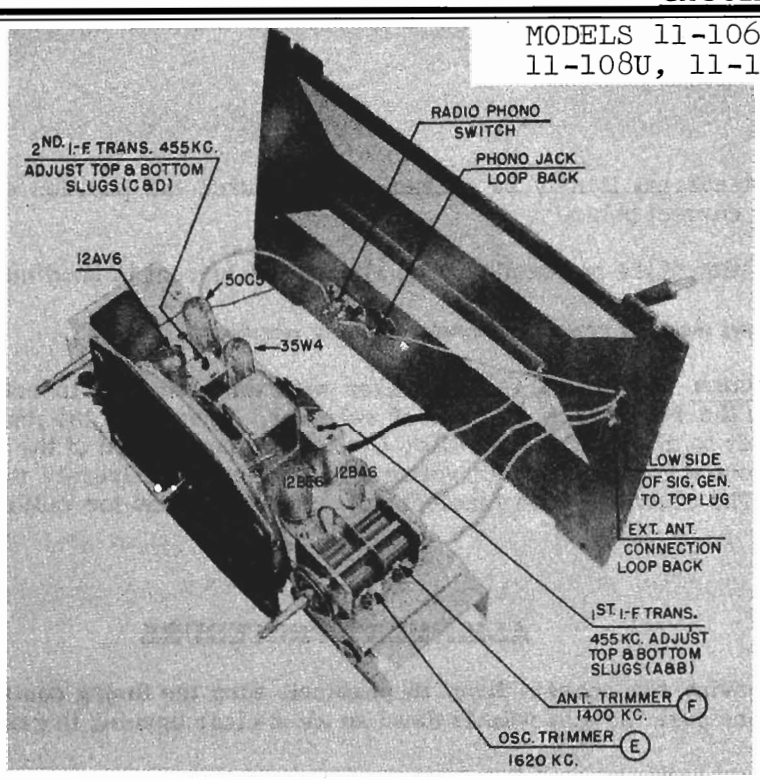

CHASSIS, TOP VIEW (Sets equipped with 12SQ7GT Tube)

REPLACEMENT PARTS LIST

Symbol No.	Part No.	Description
C1A	B-148745	Capacitor, Variable } Two Section
C1B		Capacitor, Variable } Two Section
C2	C-137727-109	Capacitor, 39 mmf., 10%, 200 v., ceramic
C3	Part of T1	Capacitor, 106 mmf.
C4	Part of T1	Capacitor, 131 mmf.
C5	39001-19	Capacitor, .1 mfd., 600 v., paper
C6	Part of T2	Capacitor, 131 mmf.
C7	Part of T2	Capacitor, 106 mmf.
C8A	C-144675-1	Capacitor, .0002 mfd., 500 v. } Four Section disc ceramic
C8B		Capacitor, .001 mfd., 500 v. } Four Section disc ceramic
C8C		Capacitor, .005 mfd., 500 v. } Four Section disc ceramic
C8D		Capacitor, .0002 mfd., 500 v. } Four Section disc ceramic
C9	B-143686-3	Capacitor, 100 mmf., 500 v., Molded disc ceramic
C10	39001-85	Capacitor, .08 mfd., 600 v., paper
C11	39001-74	Capacitor, .002 mfd., 600 v., paper
C12	39001-5	Capacitor, .0005 mfd., 600 v., paper
C13	39001-11	Capacitor, .005 mfd., 600 v., paper
C14	39001-85	Capacitor, .08 mfd., 600 v., paper
C15	39001-17	Capacitor, .05 mfd., 600 v., paper
C16A	B-147174	Capacitor, 100 mfd., 150 v. } Three Section Electrolytic
C16B		Capacitor, 30 mfd., 150 v. } Three Section Electrolytic
C16C		Capacitor, 10 mfd., 150 v. } Three Section Electrolytic
C17	39001-13	Capacitor, .01 mfd., 600 v., paper
R1	39373-60	Resistor, 22,000 ohm, 1/2 w.
R2	39373-97	Resistor, 2.2 megohm, 1/2 w.
R3	39373-74	Resistor, 100,000 ohm, 1/2 w.
R4	39374-34	Resistor, 5600 ohm, 10%, 1/2 w.
R5	39373-107	Resistor, 10 megohm, 1/2 w.
R6	B-148327	Control, Volume (3 megohm)
R7	39373-67	Resistor, 47,000 ohm, 1/2 w.
R8	39373-87	Resistor, 470,000 ohm, 1/2 w.
R9	39373-87	Resistor, 470,000 ohm, 1/2 w.
R10	39373-16	Resistor, 150 ohm, 1/2 w.
R11	39373-90	Resistor, 680,000 ohm, 1/2 w.
R12	39374-189	Resistor, 100 ohm, 10%, 1 w.
R13	39374-114	Resistor, 1200 ohm, 10%, 1 w.
R14	39373-33	Resistor, 1000 ohm, 1/2 w.
CA1	C-132300-2	Cable & Plug Assy., Power
CO1	W-136998	Connector, Phono

Symbol No.	Part No.	Description
L1	AC-148752	Loop & Back Assy.
L2	AW-148259	Coil, Oscillator
SP1	AD-145956-2	Speaker (5-1/4" P.M.)
SW1	Part of R6	Switch, Power
SW2	W-148260	Switch, Phono
T1	AC-139919-3	Transformer, 1st I.F.
T2	AC-139919-3	Transformer, 2nd I.F.
T3	B-147171	Transformer, Output
	C-147934	Bottom, Chassis
	R-148672	Cabinet (11-106U)
	AB-148962-1	Cabinet (11-107U)
	AB-148962-2	Cabinet (11-108U)
	AB-148962-3	Cabinet (11-109U)
	B-94962-5	Clip, Dial Pointer
	W-148434	Clip, I.F. Transformer Mtg.
	W-131154-1	Cotter (External), Dial Pointer Shaft
	C-148674	Escutcheon, Dial
	AB-148743	Grille Cloth & Baffle Assy.
	AW-148774	Grille & Medallion Assy. (11-106U)
	AW-148956	Grille & Medallion Assy. (11-107U)
	AW-148957	Grille & Medallion Assy. (11-108U)
	AW-148955	Grille & Medallion Assy. (11-109U)
	C-148708	Knob
	W-147275	Mounting, Rubber (2 used)
	W-45580-2	Mounting, Rubber (4 used)
	W-148788	Name (CROSLEY)
	AW-148773	Pointer & Clip Assy., Dial
	AW-148779	Pulley & Shaft Assy., Dial Pointer
	39178-57CL	Screw, Grille Mtg.
	39176-61CL	Screw, Chassis Mtg.
	W-147784	Shield, Tube (V2, V3)
	W-46447-1	Shield, Tube (V3), sets equipped with 12SQ7GT Tube
	39462-2	Socket, Tube
	W-149987	Socket, Tube (V3), sets equipped with 12SQ7GT Tube
	W-51752	Spring, Drive Cord
	W-136630	Stud, Trimount
	AB-148775	Support Assy. Pointer Pulley
	W-147168	Support, Speaker

©John F. Rider

Compliments of www.nucow.com

MODELS 11-106U, 11-107U,
11-108U, 11-109U, Ch. 302

When using direct current it may be necessary to reverse the position of the power plug in the electric outlet for correct polarity.

Reversing the position of the power plug when alternating current is used may reduce hum.

Under no circumstances should a ground be connected to this receiver.

Photograph connection —To use a record player with this receiver insert the pickup plug of the record player into the Phono jack on back of receiver. Then slide the Radio-Phono Switch on the back of the receiver to the "Phono" position. Connect the power cord of the record player to a convenient electric outlet of the correct voltage and frequency. Operate the record player in the normal manner. The controls of the receiver operate the same as for radio programs.

ALIGNMENT PROCEDURE

Note: Before removing the chassis from the cabinet, turn the tuning control completely counter-clockwise and push the dial pointer down so as to clear opening in grille.

1. Connect an output meter across the speaker voice coil.
2. The r.f. signal input from the signal generator should be connected as indicated in the alignment chart. Connect the signal generator ground to the top lug on loop antenna back.
3. Turn the volume control on full and adjust the signal generator output to produce approximately midscale deflection of the output meter, but maintain signal generator output as low as possible to prevent AVC action in the receiver.

ALIGNMENT CHART

Alignment adjustment locations are shown on page 1, "CHASSIS, TOP VIEW."

Alignment Sequence	Signal Generator Output			Position of Dial pointer	Adjust for Maximum Output
	Frequency in KC	In Series with	To		
1	455	200 mmf.	External Ant. Screw	1620	A, B, C & D (See Note 1.)
2	1620	200 mmf.	External Ant. Screw	1620	E (See Note 2.)
3	1400	200 mmf.	External Ant. Screw	Tune to Signal	F (See Note 2.)

ALIGNMENT NOTES

1. Repeat adjustments (A, B, C & D) in sequence, until maximum output is obtained.
2. The loop antenna must be positioned with respect to the chassis to simulate its position when chassis and loop are fastened in cabinet.

©John F. Rider

Compliments of www.nucow.com

MODELS 11-106U, 11-107U,
11-108U, 11-109U, Ch. 302

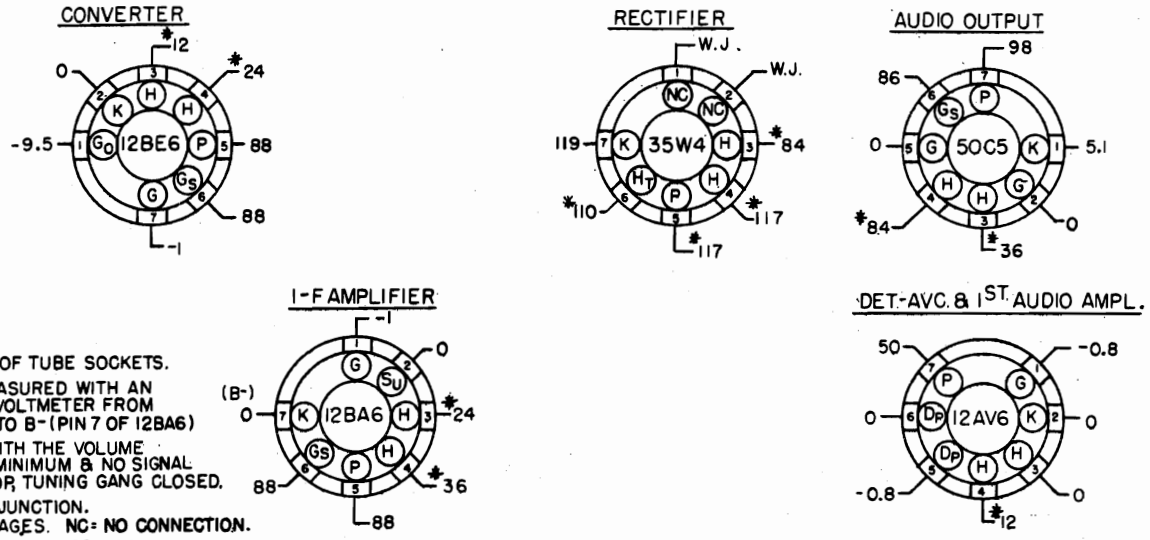

NOTES:
1. BOTTOM VIEW OF TUBE SOCKETS.
2. VOLTAGES MEASURED WITH AN ELECTRONIC VOLTMETER FROM SOCKET LUG TO B- (PIN 7 OF 12BA6)
3. MEASURED WITH THE VOLUME CONTROL AT MINIMUM & NO SIGNAL INTO THE LOOP, TUNING GANG CLOSED.
4. W.J. = WIRING JUNCTION.
✱ = AC. VOLTAGES. NC = NO CONNECTION.
5. LINE VOLTAGE = 117 V., 60~AC.
6. SOCKET VOLTAGE TOLERANCE ± 10%

SOCKET VOLTAGE CHART (Sets equipped with 12AV6 Tube)

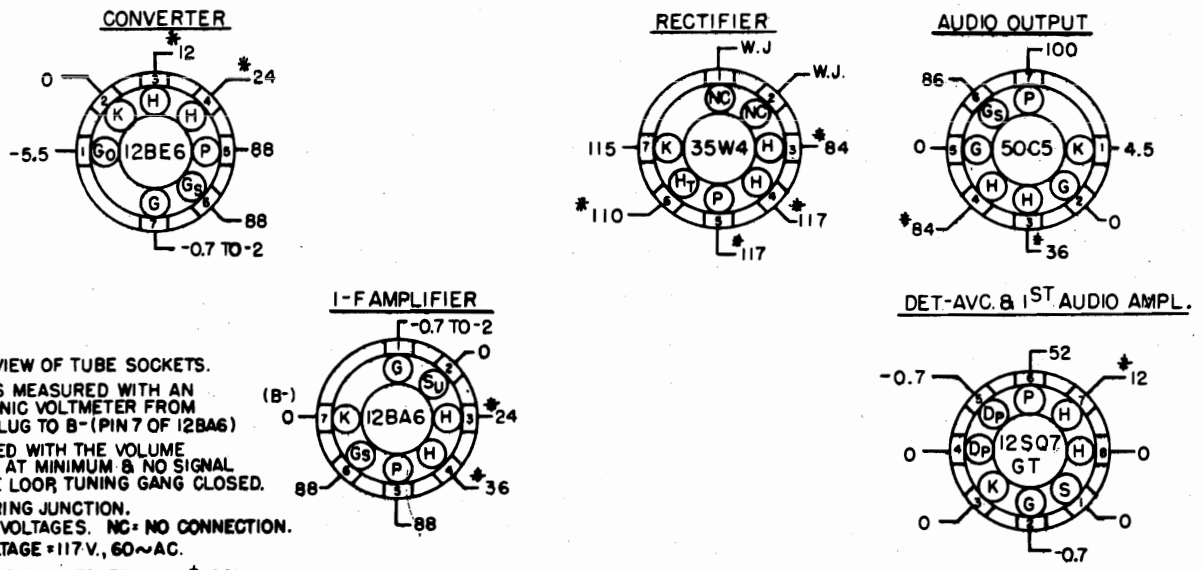

NOTES:
1. BOTTOM VIEW OF TUBE SOCKETS.
2. VOLTAGES MEASURED WITH AN ELECTRONIC VOLTMETER FROM SOCKET LUG TO B- (PIN 7 OF 12BA6)
3. MEASURED WITH THE VOLUME CONTROL AT MINIMUM & NO SIGNAL INTO THE LOOP, TUNING GANG CLOSED.
4. W.J. = WIRING JUNCTION.
✱ = AC. VOLTAGES. NC = NO CONNECTION.
5. LINE VOLTAGE = 117 V., 60~AC.
6. SOCKET VOLTAGE TOLERANCE ± 10%

SOCKET VOLTAGE CHART (Sets equipped with 12SQ7GT Tube)

©John F. Rider

Compliments of www.nucow.com

MODELS 11-106U, 11-107U,
11-108U, 11-109U, Ch. 302

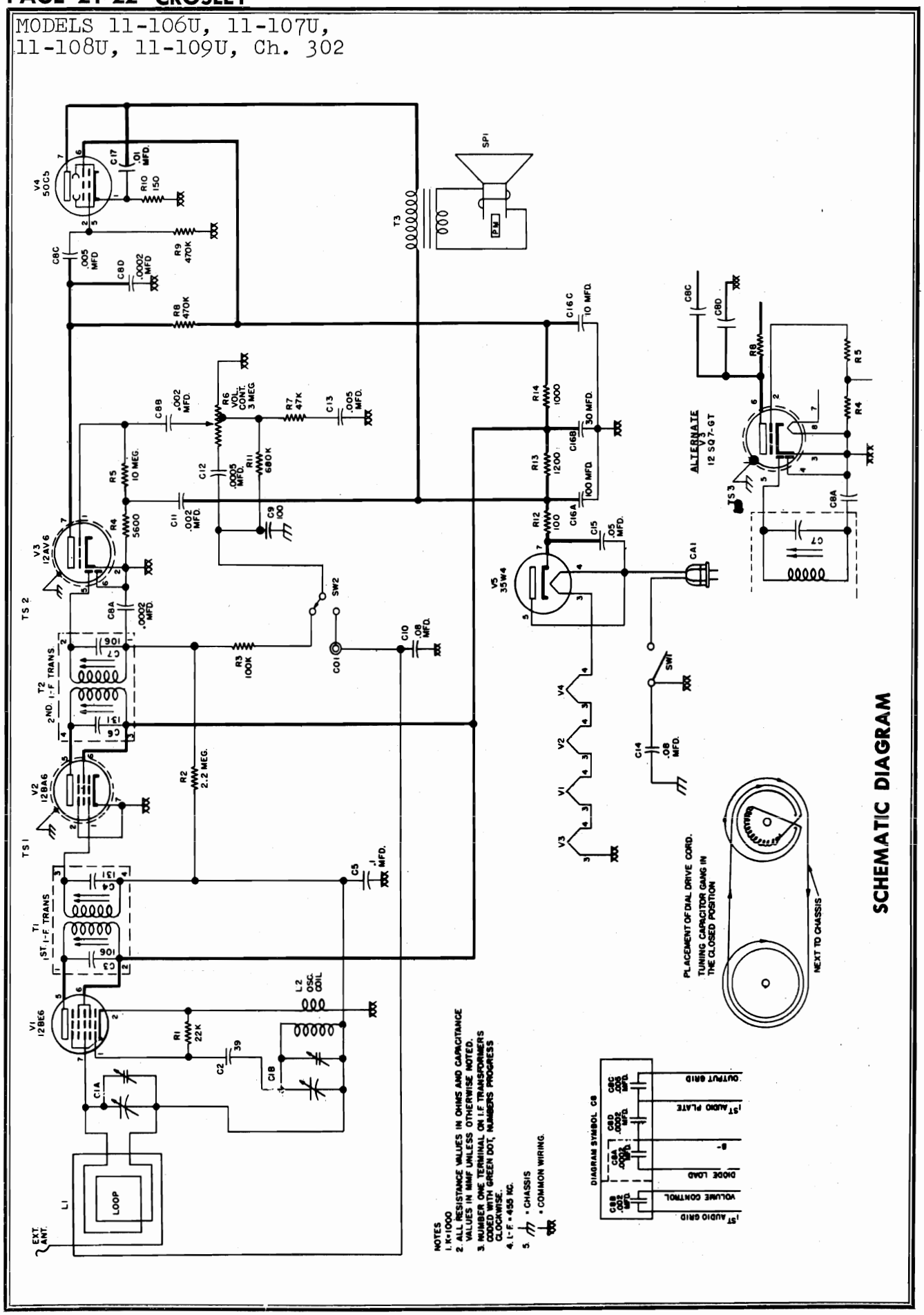

©John F. Rider

Compliments of www.nucow.com

MODELS 11-126U,
11-128U, 11-129U, Ch. 312

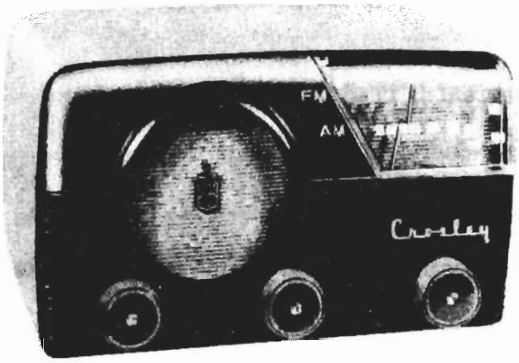

Model No.	Cabinet	Front
11-126U	Simulated Saddle Leather	Brown
11-127U	Simulated Green Morroco Leather	Green
11-128U	Simulated Light Rawhide	Ebony
11-129U	Simulated Red Morroco Leather	Maroon

DESCRIPTION

TYPE: Seven-tube, two-band, superheterodyne.

FREQUENCY RANGE: Standard Broadcast Band; 540 to 1620 kc.

Frequency Modulation Band; 88 to 108 megacycles.

INTERMEDIATE FREQUENCY: Standard Broadcast Band; 455 kc.

Frequency Modulation Band; 10.7 mc.

FM ANTENNA INPUT IMPEDANCE: 75 ohms balanced.

POWER SUPPLY: a.c.—d.c.

VOLTAGE RATING: 105-125 volts.

POWER CONSUMPTION: 40 watts at normal power supply voltage (117 volts).

POWER OUTPUT: 1 watt maximum.

TUBE COMPLEMENT:

Type	Function
12BA6	R.F. Amplifier (FM)
12AT7	Oscillator & Mixer (FM)
12BA6	I.F. Amplifier (AM & FM)
12BA6	2nd I.F. Amplifier & AVC (FM)
19T8	Detector & 1st A.F. Ampl. (AM & FM; AVC (AM)
12BE6	Converter (AM)
35C5	Audio Output
	Selenium Rectifier

DIAL BULB: 7 w., 120 v., Candelabra Base

NOTES:
1. BOTTOM VIEW OF TUBE SOCKETS.
2. VOLTAGES MEASURED FROM SOCKET LUG TO CHASSIS (B-) WITH AN ELECTRONIC VOLTMETER ; TUNING GANG IN THE CLOSED POSITION WITH NO SIGNAL, VOLUME CONTROL AT MINIMUM.
3. SUPPLY VOLTAGE 117 VOLTS, 60 CYCLES.
4. ALL VOLTAGES MEASURED WITH THE SELECTOR SWITCH IN THE A.M. POSITION EXCEPT WHERE MARKED WITH DELTA (▲).
5. ▲ = VOLTAGE WITH SELECTOR SWITCH IN THE FM. POSITION
6. * = A.C. VOLTAGES.
7. SOCKET VOLTAGE TOLERANCE ± 10%

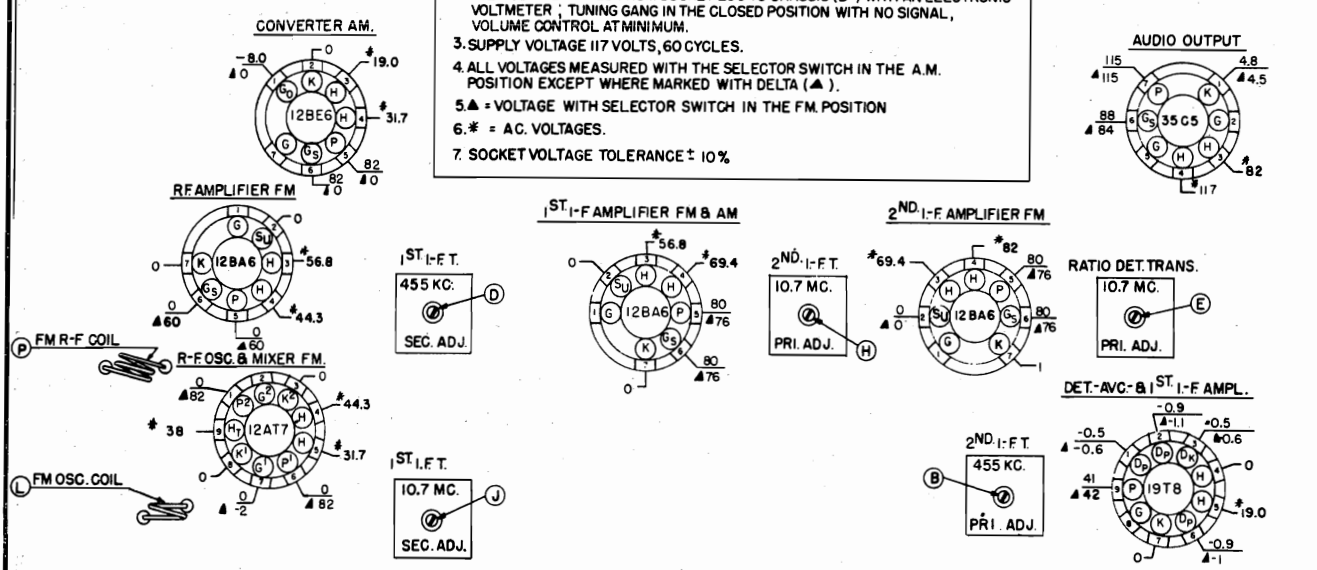

SOCKET VOLTAGE CHART

©John F. Rider

Compliments of www.nucow.com

MODELS 11-126U, 11-128U,
11-129U, Ch. 312

When using direct current it may be necessary to reverse the position of the power plug in the electric outlet for correct polarity.

Reversing the position of the power plug when alternating current is used may reduce power hum.

Under no circumstances should a ground be connected to this receiver.

Never place the receiver chassis on a metal bench or grounded object when the power plug is connected to the electric outlet. To avoid shock when making repairs or adjustments, do not permit any part of the body to contact grounded metal objects.

ALIGNMENT PROCEDURE

This receiver has been aligned at the factory for best performance and no attempt should be made to realign it unless the proper test equipment is available.

1. Turn the tuning condenser to full mesh, against stop, and set the dial pointer to the reference point at the "88" end of the dial.
2. Set the tone control knob to the full treble position (extreme right).
3. For Amplitude Modulated signal readings, connect output meter across voice coil (3.2 ohms).
4. All Amplitude Modulated input signals are modulated 30% at 400 cycles with the High side of the signal generator connected to receiver as indicated in the alignment chart. Connect the low side of signal generator through a 0.1 mfd. condenser to the receiver chassis. If hum is encountered, use a 1 to 1 isolating transformer between the power line outlet and the receiver power line cord. Then connect the low side of the signal generator directly to the receiver chassis.
5. All Frequency Modulated signals are modulated 30% at 400 cycles. 30% modulation is equal to a deviation of 22.5 kilocycles.
6. Turn the volume control to maximum clockwise position and adjust signal generator output to produce a noticeable output meter reading. Keep signal generator output as low as possible to prevent AVC action in the receiver.
7. Disconnect short wire, with spade lug, from F.M. Antenna Terminal.

ALIGNMENT NOTES

1. Use an unmodulated signal generator with approximately 100,000 mv. output.
2. Connect the electronic voltmeter across the 27,000 ohm diode load resistor (R6).
3. Connect two 100,000 ohm 5% carbon resistors in series, connect these resistors across the 4 mfd. stabilizing capacitor (C17) in the diode circuit, connect the electronic voltmeter between the output of the RF filter network (C22) and the midpoint of the two 100,000 ohm resistors. Align secondary core (F) of T5 for zero volts, first using a high scale on the electronic voltmeter and then switching to the lowest scale for close balance.
4. Use an unmodulated signal. Electronic voltmeter connected across 27,000 ohm load resistor (R6). Limit output of signal generator so that the reading on the electronic voltmeter will not exceed 5 volts.

©John F. Rider

Compliments of www.nucow.com

5. Remove the two 100,000 ohm resistors and electronic voltmeter after alignment.
6. Adjust turns on FM oscillator coil by spreading or squeezing together, so that 98 megacycle signal falls on 98 megacycles on the dial.
7. Rock gang while adjusting FM. RF trimmer until maximum output meter reading is obtained, or align for maximum noise level at zero signal.
8. Adjust turns on FM. RF coil until maximum output meter reading is obtained.

MEGACYCLES TO CHANNEL NUMBERS "FM" BAND

Frequency in Megacycles	Channel No.	Frequency in Megacycles	Channel No.
87.9	200	98.9	255
88.9	205	99.9	260
89.9	210	100.9	265
90.9	215	101.9	270
91.9	220	102.9	275
92.9	225	103.9	280
93.9	230	104.9	285
94.9	235	105.9	290
95.9	240	106.9	295
96.9	245	107.9	300
97.9	250		

To find the frequency in megacycles for CHANNEL NUMBERS between those given above, add .2 megacycles for every whole number added to the CHANNEL NUMBER; for example Channel 204 would be 88.7 megacycles and 251 would be 98.1 megacycles.

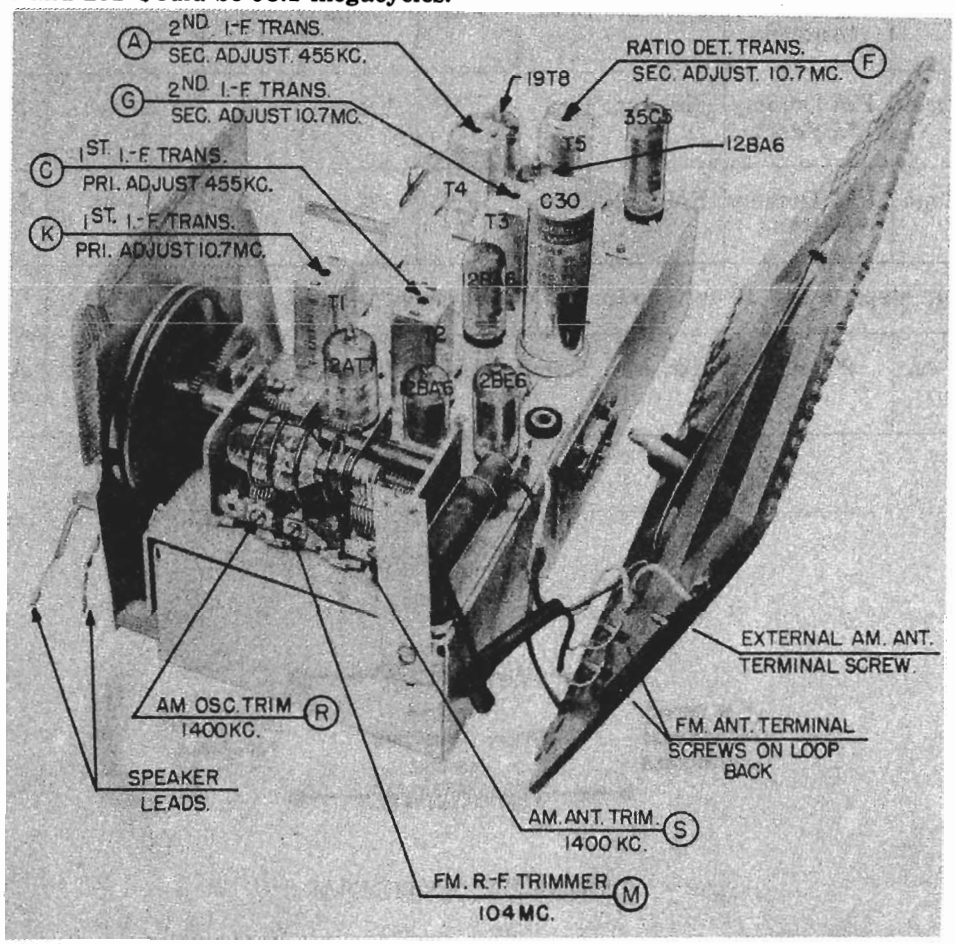

CHASSIS TOP VIEW SHOWING ALIGNMENT ADJUSTMENTS

©John F. Rider

Compliments of www.nucow.com

MODELS 11-126U, 11-128U,
11-129U, Ch. 312

ALIGNMENT CHART

Alignment Sequence	Signal Generator Output			Position of		Adjust	Type of Selectivity Curve	Remarks
	Frequency	In Series With	To	Range Switch	Tuning Dial or Tun. Cap.			
1	455 kc.	.05 mfd.	V3 grid pin 1	AM	Open	A & B	Single peak	
2	455 kc.	.05 mfd.	V6 grid pin 7	AM	Open	C & D	Single peak	Retouch A & B
3	10.7 mc.	.05 mfd.	V4 grid pin 1	FM	Closed	E	Single peak	See note 1 & 2
4	10.7 mc.	.05 mfd.	V4 grid pin 1	FM	Closed	F	——	Balance to zero volts. Note 3
5	10.7 mc.	.05 mfd.	V3 plate pin 5	FM	Closed	E & G	Single peak	See note 4 repeat adj. of E & G for max. alignment
6	10.7 mc.	.05 mfd.	V3 grid pin 1	FM	Closed	H	Single peak	Note 4
7	10.7 mc.	.05 mfd.	Stator center gang section	FM	Closed	J, K & H	Single peak	Note 4 & 5
8	98 mc.	FM Dummy *Antenna	FM Ant. Term.	FM	98 mc.	L	——	Note 6
19	104 mc.	FM Dummy *Antenna	FM Ant. Term.	FM	104 mc.	M	——	Note 7
10	92 mc.	FM Dummy *Antenna	FM Ant. Term.	FM	92 mc.	P	——	Note 8
11	Repeat steps 9 and 10 until no further improvement is noted.							
12	1400 kc.	200 mmf.	Ext. Ant. Term.	AM	1400 kc.	R & S	——	Adjust S for max output

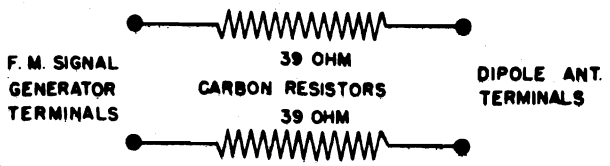

* DUMMY ANTENNA

©John F. Rider

Compliments of www.nucow.com

MODELS 11-126U, 11-128U,
11-129U, Ch. 312

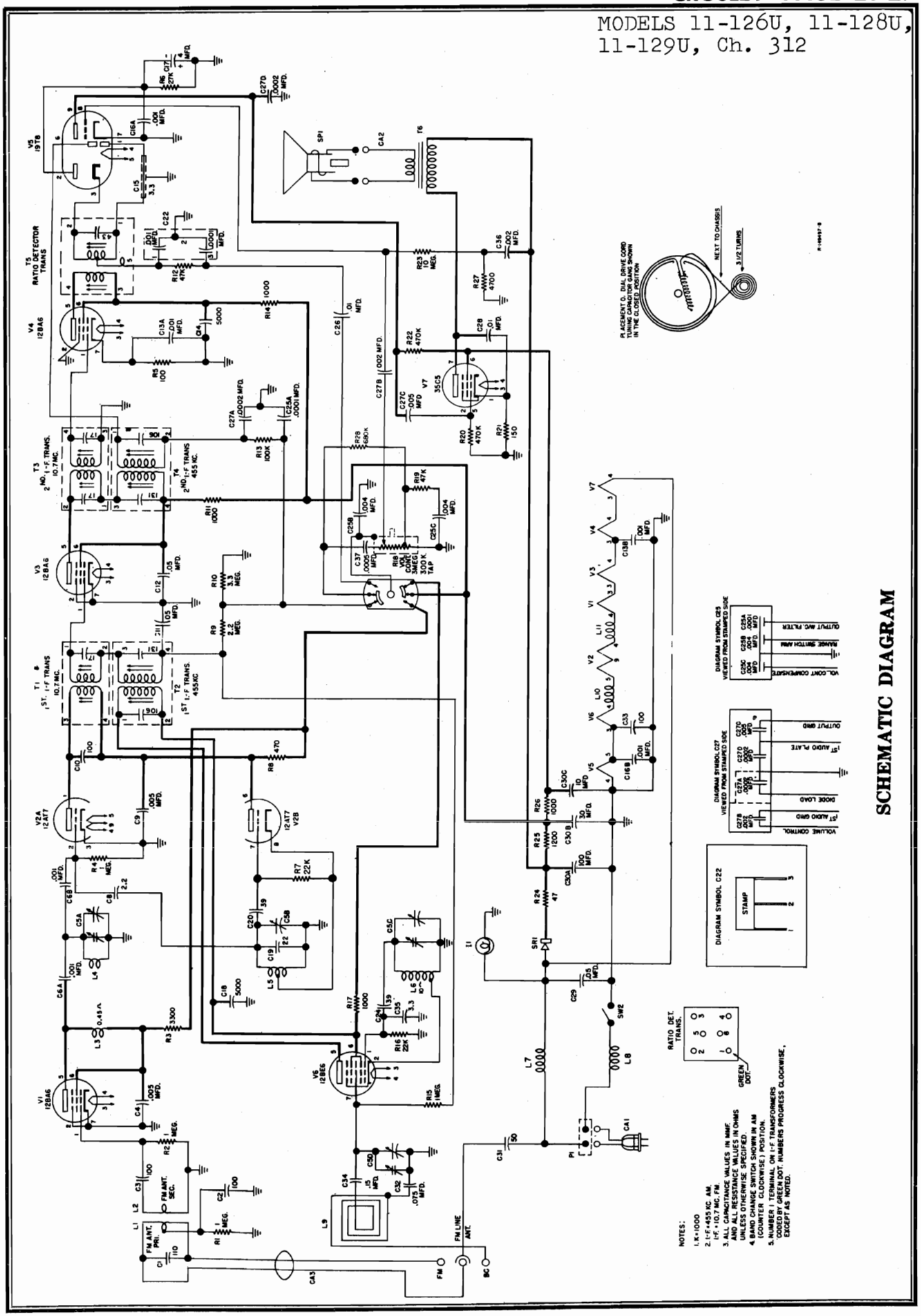

©John F. Rider

Compliments of www.nucow.com

MODELS 11-126U, 11-128U,
11-129U, Ch. 312

REPLACEMENT PARTS LIST

Symbol No.	Part No.	Description
C1	W-145913-2	Capacitor, 110 mmf., 5%, 500 v., ceramic
C2	B-143686-3	Capacitor, 100 mmf., 500 v., molded disc ceramic
C3	B-143223-7	Capacitor, 100 mmf., 500 v., mica
C4	C-144675-2	Capacitor, .005 mfd., 500 v., disc ceramic
C5A	C-149125	Capacitor, Variable } Four Section
C5B		Capacitor, Variable
C5C		Capacitor, Variable
C5D		Capacitor, Variable
C6A	C-144675-7	Capacitor, .001 mfd., 500 v. } Two section disc ceramic
C6B		Capacitor, .001 mfd., 500 v.
C8	B-143686-5	Capacitor, 2.2 mmf., 500 v., molded disc ceramic
C9	C-137727-48	Capacitor, 5000 mmf., 500 v., ceramic
C10	B-143223-12	Capacitor, 100 mmf., 5%, 500 v., mica
C11	39001-17	Capacitor, .05 mfd., 600 v., paper
C12	39001-17	Capacitor, .05 mfd., 600 v., paper
C13A	C-144675-7	Capacitor, .001 mfd., 500 v. } Two section disc ceramic
C13B		Capacitor, .001 mfd., 500 v.
C14	C-137727-48	Capacitor, 5000 mmf., 500 v., ceramic
C15	39008-91	Capacitor, 3.3 mmf., Spiral Shield Wire
C16A	C-144675-7	Capacitor, .001 mfd., 500 v. } Two section disc ceramic
C16B		Capacitor, .001 mfd., 500 v.
C17	B-142958	Capacitor, 4 mfd., 50 v., Electrolytic
C18	C-137727-48	Capacitor, 5000 mmf., 500 v., ceramic
C19	C-137727-98	Capacitor, 22 mmf., 2%, 500 v., ceramic
C20	C-137727-97	Capacitor, 39 mmf., 10%, 500 v., ceramic
C22A	C-144675-12	Capacitor, .001 mfd., 500 v. } Two section disc ceramic
C22B		Capacitor, .0001 mfd., 500 v.
C24	C-137727-109	Capacitor, 39 mmf. 10%, 200 v., ceramic
C25A	C-144675-18	Capacitor, .0001 mfd., 500 v. } Three section disc ceramic
C25B		Capacitor, .004 mfd., 500 v.
C25C		Capacitor, .004 mfd., 500 v.
C26	39001-13	Capacitor, .01 mfd., 600 v., paper
C27A	C-144675-1	Capacitor, .0002 mfd., 500 v. } Four section disc ceramic
C27B		Capacitor, .002 mfd., 500 v.
C27C		Capacitor, .005 mfd., 500 v.
C27D		Capacitor, .0002 mfd., 500 v.
C28	39001-13	Capacitor, .01 mfd., 600 v., paper
C29	39001-17	Capacitor, .05 mfd., 600 v., paper
C30A	B-149183	Capacitor, 100 mfd., 150 v. } Three section electrolytic
C30B		Capacitor, 30 mfd., 150 v.
C30C		Capacitor, 10 mfd., 150 v.
C31	B-143686-1	Capacitor, 50 mmf., 500 v., molded disc ceramic
C32	39001-18	Capacitor, .075 mfd., 600 v., paper
C33	B-143686-3	Capacitor, 100 mmf., 500 v., molded disc ceramic
C34	39001-20	Capacitor, .15 mfd., 600 v., paper
C35	W-137398-5	Capacitor, 3.3 mmf., 500 v.
C36	39001-74	Capacitor, .002 mfd., 600 v., paper
C37	39001-5	Capacitor, .0005 mfd., 600 v., paper
C38	Part of T1	Capacitor, 17 mmf., 3%
C39	Part of T2	Capacitor, 106 mmf., 5%
C40	Part of T2	Capacitor, 131 mfd., 5%
C41	Part of T3	Capacitor, 17 mmf., 3%
C42	Part of T3	Capacitor, 17 mmf., 3%
C43	Part of T4	Capacitor, 131 mmf., 5%
C44	Part of T4	Capacitor, 106 mmf., 5%
C45	Part of T5	Capacitor, 43 mmf., 5%
R1	39373-92	Resistor, 1 megohm, 1/2 w.
R2	39373-92	Resistor, 1 megohm, 1/2 w.
R3	39373-44	Resistor, 3300 ohm, 1/2 w.
R4	39373-92	Resistor, 1 megohm, 1/2 w.
R5	39373-14	Resistor, 100 ohm, 1/2 w.
R6	39374-42	Resistor, 27,000 ohm, 10% 1/2 w.
R7	39374-41	Resistor, 22,000 ohm, 10%, 1/2 w.
R8	39373-26	Resistor, 470 ohm, 1/2 w.
R9	39373-97	Resistor, 2.2 megohm, 1/2 w.
R10	39373-100	Resistor, 3.3 megohm, 1/2 w.
R11	39373-33	Resistor, 1000 ohm, 1/2 w.
R12	39373-67	Resistor, 47,000 ohm, 1/2 w.
R13	39373-74	Resistor, 100,000 ohm, 1/2 w.
R14	39373-33	Resistor, 1000 ohm, 1/2 w.
R15	39373-92	Resistor, 1 megohm, 1/2 w.
R16	39373-60	Resistor, 22,000 ohm, 1/2 w.
R17	39373-33	Resistor, 1000 ohm, 1/2 w.
R18	B-149184	Control, Volume (3 megohm-Tap 300,000 ohm)
R19	39373-67	Resistor, 47,000 ohm, 1/2 w.
R20	39373-87	Resistor, 470,000 ohm, 1/2 w.
R21	39374-15	Resistor, 150 ohm, 10%, 1/2 w.
R22	39373-87	Resistor, 470,000 ohm, 1/2 w.
R23	39373-107	Resistor, 10 megohm, 1/2 w.
R24	39374-185	Resistor, 47 ohm, 10%, 2 w.
R25	39374-202	Resistor, 1200 ohm, 10%, 2 w.
R26	39374-25	Resistor, 1000 ohm, 10%, 1/2 w.
R27	39374-33	Resistor, 4700 ohm, 10%, 1/2 w.
R28	39373-90	Resistor, 680,000 ohm, 1/2 w.
CA1	C-132300-6	Cable & Plug Assy., Power
I1	W-145851	Bulb (Dial), 7 w., 120 v., Candelabra Base
SP1	C-145768	Speaker
SR1	B-145370	Rectifier, Selenium
SW1	W-145300-2	Switch, Band Change
SW2	Part of R18	Swith, Power
T1	D-145025-3	Transformer, 1st I.F. (10.7 mc.)
T2	AC-139919-3	Transformer, 1st I.F. (455 kc.)
T3	D-145025-1	Transformer, 2nd I.F. (10.7 mc.)
T4	AC-139919-3	Transformer, 2nd I.F. (455 kc.)
T5	C-145193-1	Transformer, Ratio Detector
T6	138131-1	Transformer, Output
L1	AW-145695	Coil Assy., F.M. Antenna Primary
L2	AW-145724	Coil Assy., F.M. Antenna Secondary
L3	AW-143837	Choke Assy., R.F. (F.M.)
L4	AW-145678	Coil Assy., R.F. (F.M.)
L5	AW-145677	Coil Assy., Oscillator (F.M.)
L6	AW-145372	Coil Assy., Oscillator (A.M.)
L7	AW-143934	Choke Assy., R.F.
L8	AW-143934	Choke Assy., R.F.
L9	AC-145876	Loop Antenna, Back & Power Cable Assy.
L10	AW-149187	Choke Assy.
L11	AW-149187	Choke Assy.
P1	W-139900	Plug, Interlock
	AB-149176	Background & Cloth Assy., Dial
	AB-149145	Baffle Assembly, Speaker
	AW-149073	Bracket Assembl, Dial Pointer
	AW-145697	Bushing & Insulator, Drive Shaft
	AC-149317-1	Cabinet (11-126U)
	AC-149317-2	Cabinet (11-127U)
	AC-139317-3	Cabinet (11-128U)
	AC-149317-4	Cabinet (11-129U)
	AW-145103	Connector, F.M. Line Antenna
	W-131154-1	Cotter (External), Drive Shaft
	C-149154	Dial
	W-138853	Insulator, Volume Control
	B-149065-1	Knob (11-126U)
	B-149065-2	Knob (11-127U)
	B-149065-3	Knob (11-128U)
	B-149065-4	Knob (11-129U)
	B-148080-4	Medallion
	W-149104	Pointer, Dial
	W-143206-3	Shaft, Dial Drive
	AB-149113	Shaft & Gear Assy., Dial Pointer
	W-139040	Shock Mount, Sub-Chassis
	AB-145818	Socket & Bracket Assy., Dial Light
	W-144732	Socket, Tube (V2)
	W-145607	Socket, Tube (V5)
	W-142761	Socket, Tube (V6, V1)
	39462-1	Socket, Tube (V7)
	39462-2	Socket, Tube (V3, V4)
	W-149096	Spring, Gear
	W-145757	Spring, Drive Cord
	W-139121	Stud (Insulated), Chassis Mtg.
	W-138976	Washer (Shouldered), Volume Control

©John F. Rider

Compliments of www.nucow.com

©John F. Rider

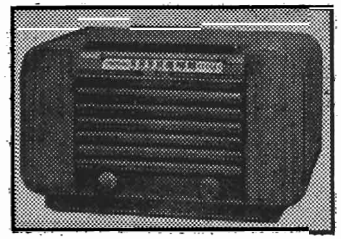

ANT. COIL	3D30
OSC. COIL	3D29
GANG COND.	7D6
FIRST I.F.	3D31
SECOND I.F.	3D32
OUTPUT TRANS.	12D10
SPEAKER	18D11

MODELS 504, 504Q
ALIGNMENT PROCEDURE CHART

STEP	CONNECT HIGH SIDE OF SIG. GENERATOR TO	SET SIG. GENERATOR TO	TUNE RECEIVER TO	ADJUST THE FOLLOWING FOR MAX. OUTPUT (KEEP SIG FROM GEN AS LOW AS POSSIBLE AT ALL TIMES.
1.	RF SECTION OF TUNING COND. IN SERIES WITH .1 CONDENSER	455KC	FULL CLOCKWISE POSITION (COND PLATES ALL WAY OPEN)	PRIMARY & SECONDARY OF 2nd I.F. TRANSFORMER
2.	" "	" "	" "	PRIMARY & SECONDARY OF 1st I.F. TRANSFORMER

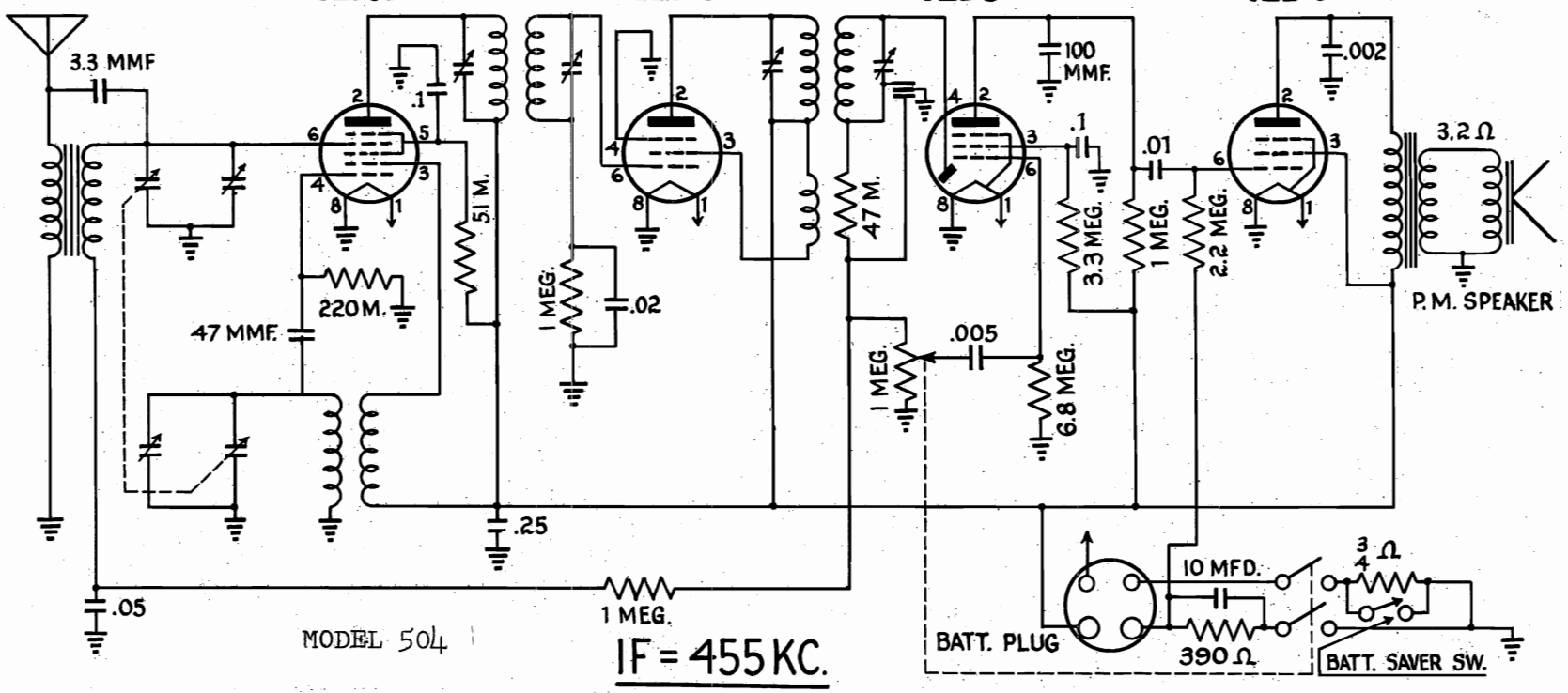

IF = 455 KC.

Compliments of www.nucow.com

MODELS 504, 504Q

ANT. COIL	3D30
OSC. COIL	3D29
GANG COND.	7D6
FIRST I.F.	3D31
SECOND I.F.	3D32
OUTPUT TRANS.	12D2
SPEAKER	18D11

ALIGNMENT PROCEDURE (CONT'D)

3.	REPEAT STEPS #1 & #2.			
4.	ANTENNA WIRE IN SERIES WITH .00025 MICA COND.	1600 KC	1600 KC (160 ON DIAL)	OSC. TRIMMER LOCATED ON VARIABLE COND. ACCESSIBLE THRU HOLE IN DIAL BRACKET
5.	" "	1400 KC	MAX. SIG. APPROX. 140 ON DIAL	ANT. TRIMMER LOCATED ON VARIABLE CONDENSER

NOTE: BE SURE THAT THE BLACK GROUND LEAD OF RECEIVER IS ATTACHED TO GROUND OF SIGNAL GENERATOR DURING ALL THE ABOVE OPERATIONS.

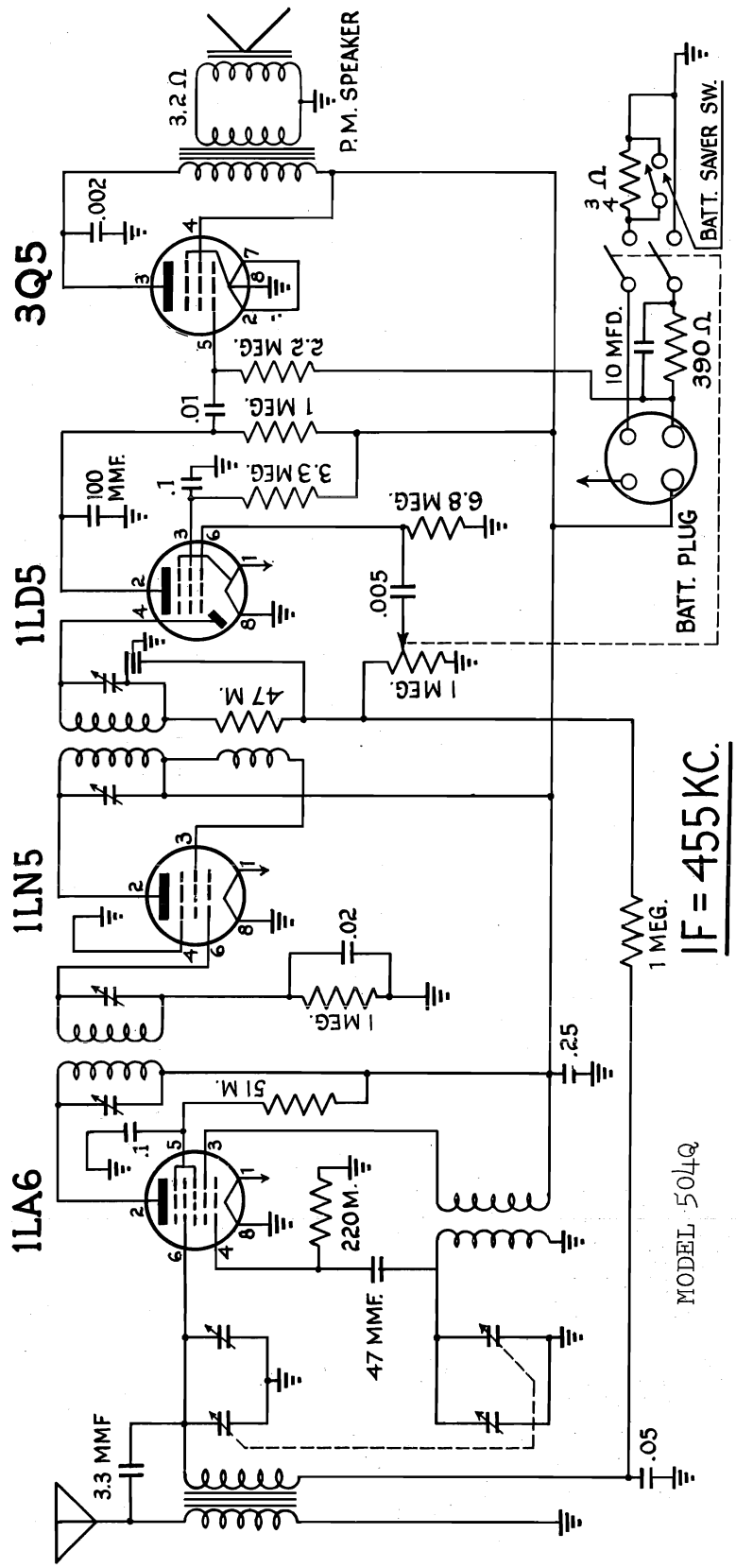

© John F. Rider

Compliments of www.nucow.com

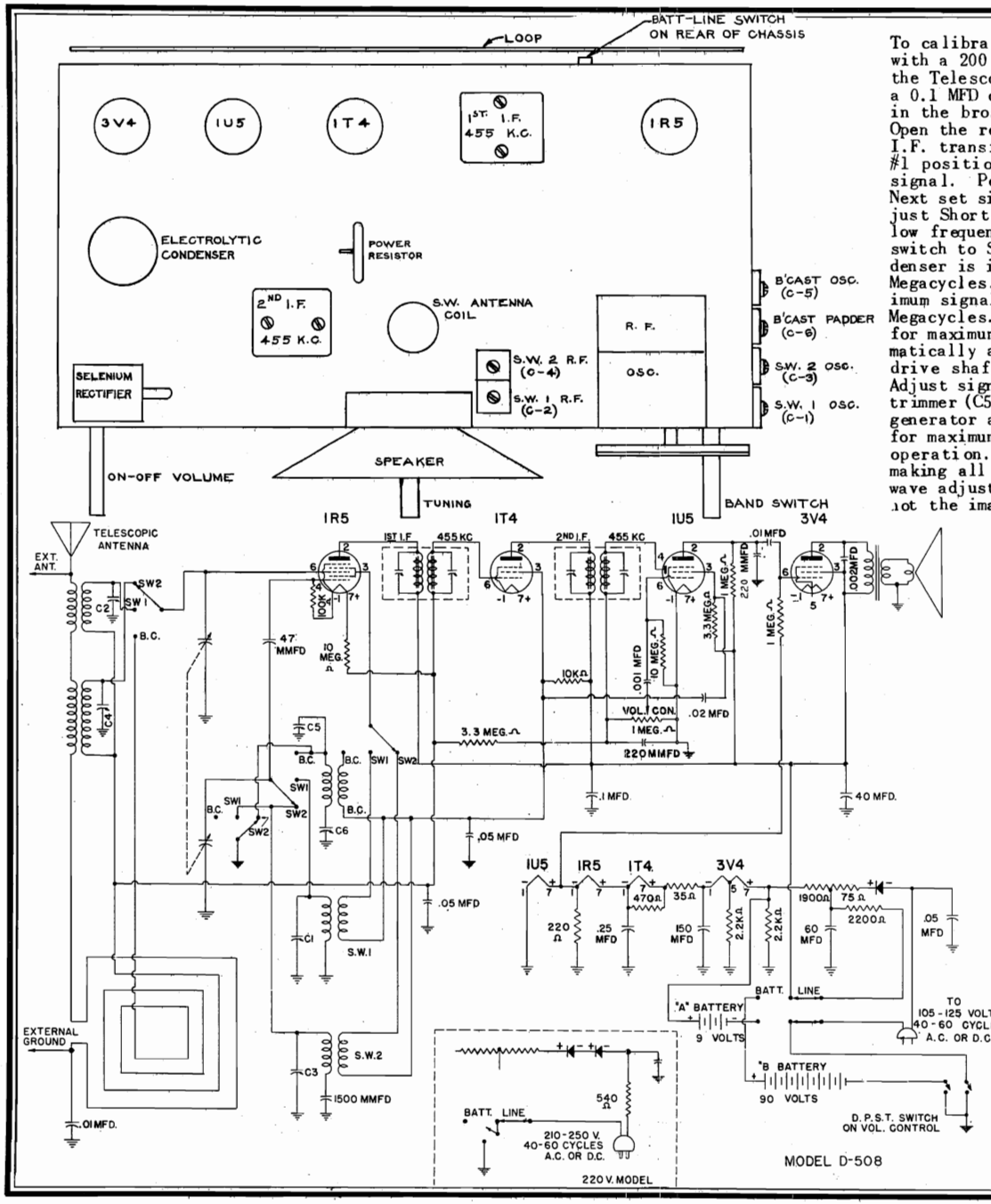

To calibrate receiver connect the output of signal generator in series with a 200 MMFD fixed condenser to the external antenna lead (coming from the Telescopic Antenna). Connect the low side of signal generator through a 0.1 MFD condenser to receiver chassis. The wave band switch should be in the broadcast position. Adjust signal generator to 455 Kilocycles. Open the receiver variable condenser for minimum capacity. Adjust both I.F. transformers for maximum signal. Turn the bandswitch to Short Wave #1 position. Set signal generator at 16.7 Megacycles. Tune in this signal. Peak Short Wave #1 oscillator trimmer (C1) for maximum signal. Next set signal generator at 15.7 Megacycles. Tune in this signal. Adjust Short Wave #1 R.F. trimmer (C2) for maximum signal strength. The low frequency end of the dial is automatically adjusted. Next turn band switch to Short Wave #2 position. Rotate drive shaft until variable condenser is in minimum capacity position. Adjust signal generator to 5.5 Megacycles. Adjust the Short Wave #2 oscillator trimmer (C3) until maximum signal from generator is heard. Next set signal generator at 5.0 Megacycles. Tune in this signal. Adjust Short Wave #2 R.F. trimmer (C4) for maximum signal strength. The low frequency end of the dial is automatically adjusted. Next turn bandswitch to broadcast position. Rotate drive shaft until variable condenser is in minimum capacity position. Adjust signal generator to 1700 Kilocycles. Adjust broadcast oscillator trimmer (C5) until maximum signal from generator is heard. Set the signal generator and receiver to 600 Kilocycles. Peak the broadcast padder (C6) for maximum output. The variable condenser should be rocked during this operation. Keep the signal generator output as low as possible when making all of these adjustments. Care should be taken in making the Short wave adjustments, that the fundamental oscillator signal be tuned in and not the image frequency, which will fall below the fundamental.

"A" battery (two required)		"B" battery (two required)	
Eveready	#746	Eveready	#482
Bright Star . . .	#361	Bright Star . . .	#30-33
Ray-O-Vac	#P83A	Ray-O-Vac	#P7830
Burgess	#G3	Burgess	#M30
Winchester Olin .	#4918	Winchester Olin .	#6210

The life of the batteries is from 225-275 hours when the receiver is used about two to four hours per day.

RANGE:

B.C. Band	540-1700 Kilocycles	555-175 meters
S.W., Band 1	16.7 to 5.3 Mc.	18-57 meters
S.W., Band 2	5.5 to 1.9 Mc.	54.5-158 meters

TUBES AND FUNCTION:

1-1R5 . . . . . Converter
1-1T4 . . . . . I.F. Amplifier
1-1U5 . . . . . Second Detector and Audio Amplifier
1-3V4 . . . . . Power Output

REPLACEMENT PARTS LIST

3005-2	35 Ohm, 2 Watt Pigtail
3007-2	1975 Ohm Metal-Clad Resistor, 10 Watt
3006C-3	Volume Cntrl with Switch
4134	Cabinet
4057A-4	Pointer Knobs
4145-1	Station Selector Knob
4137	Name Plate
6042	Dial Scale
7001D-4	Speaker
8017B-6	Bandswitch
8019	Battery-Line Switch
8018B	Selenium Rectifier
1021-3	Loop Antenna
1020-2	B.C. Osc. Coil
1124	S.W. Osc. Coil
1125	S.W. Ant. Coil
1123	2nd I.F.
1122	1st I.F.
2005-4	Electrolytic
2014-5	Variable Condenser
2058	Dual Trimmer
2057	Quadruple Trimmer
8067-1	Telescopic Antenna
5000	Line Cord for 110V Operation
5015	Resistance Line Cord for 220 V Operation
9069-3	Drive Spring

© John F. Rider

Compliments of www.nucow.com

MODEL D-517

The receiver uses an "A" supply of 4½ volts and a "B" supply of 67½ volts.

For good reception the life of the batteries is from 70 to 80 hours when the receiver is used about two hours per day.

The following or similar batteries may be used with this receiver:

"A" BATTERY 4½ V		"B" BATTERY 67½ V
Eveready	#746	#467
General	#3H3	#W45A
Ray O Vac	#P83A	#P4367
Burgess	#G3	#XX45

To install the batteries in the receiver, proceed as follows:

1. Open back by inserting fingers in slots provided on top of cabinet and pull back open.
2. Connect battery clips to batteries.
3. Put batteries in set as shown in sketch.
   BE CAREFUL NOT TO BREAK WIRES CONNECTED TO LOOPTENNA.

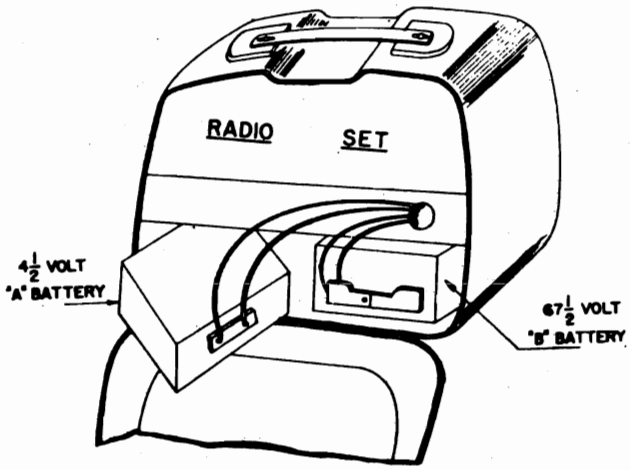

OPERATION

Battery and Electric Power

When the back of the cabinet is opened a lever switch will be seen. To operate the receiver on batteries move switch to the side marked BATT. Fold up line cord, place in set and close back. For operation of the receiver on electric power, move the lever switch to LINE, bring the line cord out of the cabinet so that when the back is closed, the cord is in the cut out provided, in the corner of the cabinet. The back of the cabinet should always be kept closed when operating the receiver.

NOTE:
If the receiver is operated on direct current and no signals are heard, reverse the line plug in the electric outlet.
If slight hum is heard when operating the receiver on alternating current, reverse the line plug in the electric outlet.

OPERATION

The knob on the left is a combination on off switch and volume control. When the knob is turned fully counter clockwise, the receiver is off and the white dot on the knob will give the relative position. To turn the receiver on, rotate this knob in a clockwise direction; further rotation in this direction increases the volume of the receiver. The control on the right is the station selector or tuning knob.

IMPORTANT

BE SURE THE RECEIVER IS TURNED OFF WHEN NOT IN USE. SINCE THE LOOPTENNA USED IN THIS RECEIVER HAS A DIRECTIONAL EFFECT IT MAY BE FOUND NECESSARY AT TIMES TO TURN THE RECEIVER TO OBTAIN BEST RECEPTION AND A MINIMUM OF INTERFERENCE.

LIST OF REPLACEMENT PARTS

1st I.F.	1027C-4	Variable Cond.	2017B
2nd I.F.	1027-1	Electrolytic Cond.	2020B
Osc. Coil	1034	Volume Control	3012
Ant. Loop	1037	Cabinet	4064
Batt. Cable	5005	Speaker	7003B3
Knobs	4055A	Sel. Rect.	8018A

©John F. Rider

Compliments of www.nucow.com

MODEL D-517

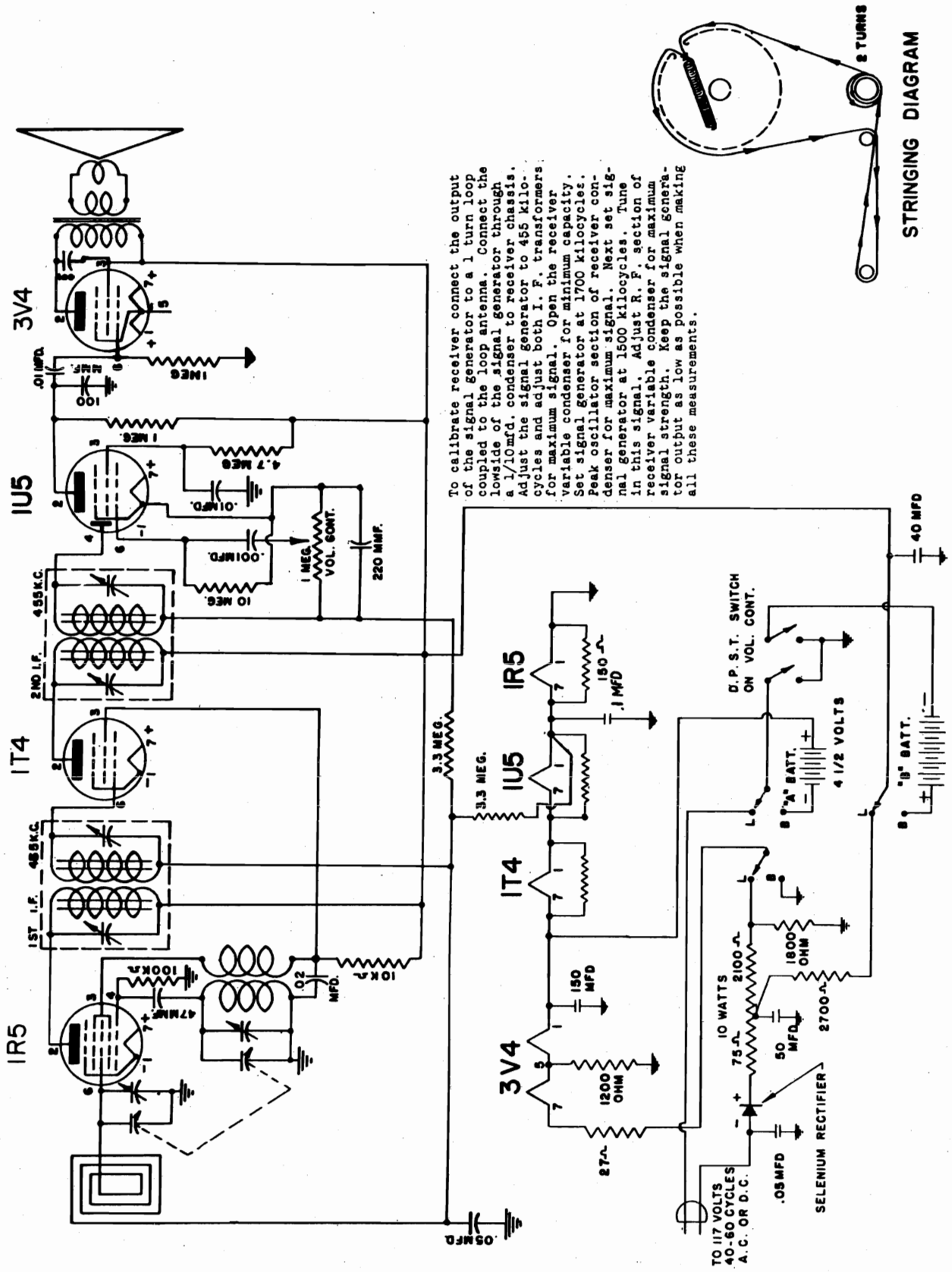

To calibrate receiver connect the output of the signal generator to a 1 turn loop coupled to the loop antenna. Connect the lowside of the signal generator through a 1/10mfd. condenser to receiver chassis. Adjust the signal generator to 455 kilocycles and adjust both I. F. transformers for maximum signal. Open the receiver variable condenser for minimum capacity. Set signal generator at 1700 kilocycles. Peak oscillator section of receiver condenser for maximum signal. Next set signal generator at 1500 kilocycles. Tune in this signal. Adjust R. F. section of receiver variable condenser for maximum signal strength. Keep the signal generator output as low as possible when making all these measurements.

© John F. Rider

Compliments of www.nucow.com

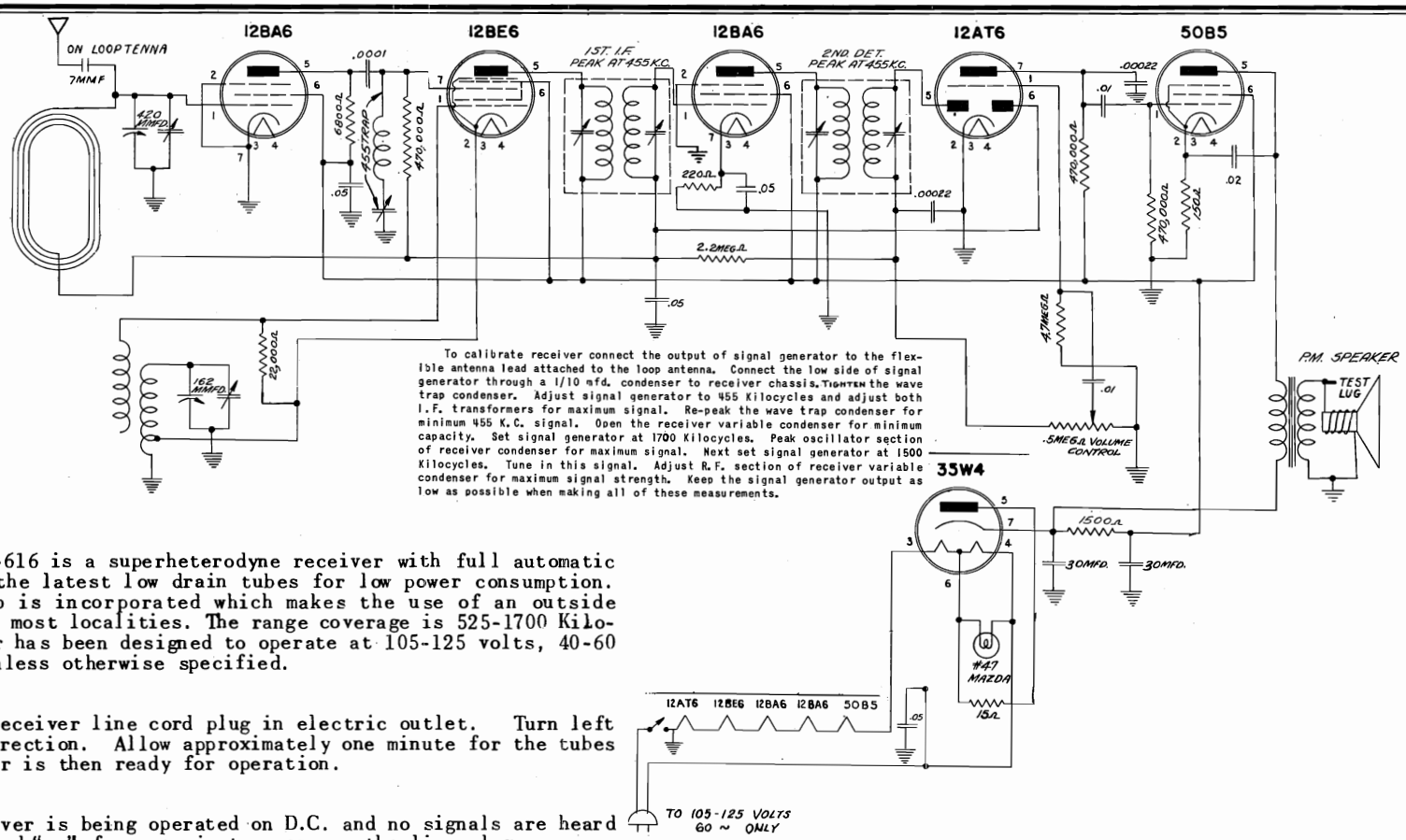

To calibrate receiver connect the output of signal generator to the flexible antenna lead attached to the loop antenna. Connect the low side of signal generator through a 1/10 mfd. condenser to receiver chassis. TIGHTEN the wave trap condenser. Adjust signal generator to 455 Kilocycles and adjust both I.F. transformers for maximum signal. Re-peak the wave trap condenser for minimum 455 K.C. signal. Open the receiver variable condenser for minimum capacity. Set signal generator at 1700 Kilocycles. Peak oscillator section of receiver condenser for maximum signal. Next set signal generator at 1500 Kilocycles. Tune in this signal. Adjust R.F. section of receiver variable condenser for maximum signal strength. Keep the signal generator output as low as possible when making all of these measurements.

TUBES
12BA6
12BE6
12BA6
12AT6
50B5
35W4

The model D-616 is a superheterodyne receiver with full automatic volume control using the latest low drain tubes for low power consumption. A self contained loop is incorporated which makes the use of an outside antenna unnecessary in most localities. The range coverage is 525-1700 Kilocycles. This receiver has been designed to operate at 105-125 volts, 40-60 cycles A.C. or D.C. unless otherwise specified.

OPERATION:
Insert the receiver line cord plug in electric outlet. Turn left knob in a clockwise direction. Allow approximately one minute for the tubes to heat up and receiver is then ready for operation.

NOTE:
If the receiver is being operated on D.C. and no signals are heard after it has been turned "on" for one minute, reverse the line plug.

ANTENNA:
The receiver operates satisfactorily without an antenna. If additional pick-up is desired, an antenna may be connected to the lead extending from the rear of chassis.

VOLUME CONTROL:
The left knob of the receiver is used as the power switch and volume control. Rotation of this knob in a clockwise direction turns the receiver "on". Further rotation in this direction increases the volume.

STATION SELECTOR:
The right hand knob operates the tuning in of stations and pointer. Ease and accuracy in tuning is provided because of a reduction drive.

IMPORTANT:
Since the loop has a directional effect, it may be found necessary to change the angle of the receiver.

REPLACEMENT PARTS

Loop Antenna	1073A	Volume Control and Switch	3013-3
Oscillator coil	1011	Line Cord	5000
1st I.F. coil	1000-3	Dial Scale (Glass)	6000G-3
2nd Detector I.F.	1002B-3	Speaker	7000C-3
Paper Condensers	2000A	Pilot Lamp Socket	8001-1
Ceramic Condensers	2012B	Shaft	9109A-2
Combination Electrolytic	2005-1	Bushing	9818C
Variable Condenser	2003C	Drive Spring	9069-3
½ Watt Resistors	3029	Dial Cord	
1 Watt Resistors	3001A	#47 Pilot Lamp	
2 Watt Resistors	3036	Wave Trap Coil	1005
Trimmer Condenser	2056	Dial Pointer	9113A-1
Cabinet, Molded, Mahogany	4077C-2	Knob, Mahogany	4080-4
Cabinet Back	4079-3		

©John F. Rider
Compliments of www.nucow.com

MODEL 1276

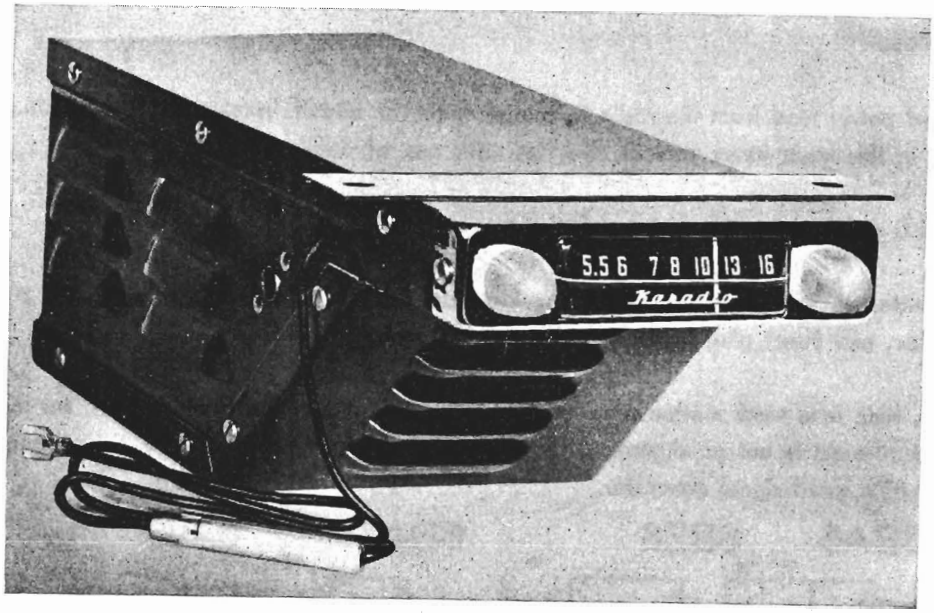

SPECIFICATIONS

Power Supply	6.3 volts DC
Frequency Range	540 KC to 1600 KC
Intermediate Frequency	257.5 KC
Antenna	Whip type
Tuning	Permeability
Speaker	4", P.M. voice coil impedance 3.2 ohms
Power Output	2.5 watts undistorted, 3.5 watts maximum
Sensitivity	1 uv for 500 milliwatts output
Selectivity	40 KC broad at 1000 times, signal at 1000 KC
Signal to Noise Ratio	10 to 1

Tubes used are as follows:

- 6BA6 R.F. Amplifier
- 6BE6 Oscillator-Converter
- 6BA6 I.F. Amplifier
- 6AV6 A.V.C., Detector, and Audio Amplifier
- 6AQ5 Power Output
- 6X4 Power Rectifier

UNPACK CAREFULLY, YOU WILL FIND:

Radio
1 Mounting bracket
1 Bag mounting parts:
Hardware, generator condenser, and distributor resistor.

MOUNTING

The chassis contains the complete radio, power supply, and speaker. This unit may be mounted to, and directly below, the instrument panel at any convenient location. Two holes must be drilled in the stiffening lip of the instrument panel about ¾ inch back from the front of the panel and spaced approximately 6 inches apart. These holes must be large enough to pass the two No. 8 machine screws provided in the bag of mounting parts for fastening the radio in place. After the holes are drilled, insert the mounting screws through the holes in the mounting plate of the radio and in the instrument panel lip, and place lock washers and nuts on screws. These nuts must be securely fastened. It is also very important that the paint be removed from the instrument panel lip directly under the nut so that a good ground connection is made.

Drill a hole to pass a No. 10 machine screw in the fire wall or some other convenient place, and bolt one end of the metal strap with series of holes to this place. Insert the ¼-20 stud in tapped hole in the back of the radio, and fasten the mounting strap to the back of the radio by means of this stud, lock washer, and nut. This is the back support for the radio, and good ground connections must also be considered in this assembly.

©John F. Rider

Compliments of www.nucow.com

MODEL 1276

CONNECTIONS

Connect the fused power lead from the radio to the ammeter or circuit breaker of the vehicle. A 10 ampere fuse is provided in this lead; never replace this fuse with one of another value.

The antenna lead is plugged into the antenna jack.

If a second, or external, speaker is desired, a speaker socket is provided. Just connect the proper plug onto this second speaker, and insert plug in the external speaker socket.

After installation, tune in a weak station near 1600 KC, and adjust antenna trimmer, TC1, for maximum volume. If, for any reason, the set is out of alignment, these adjustments must be made by a competent service man and with the use of a good signal generator.

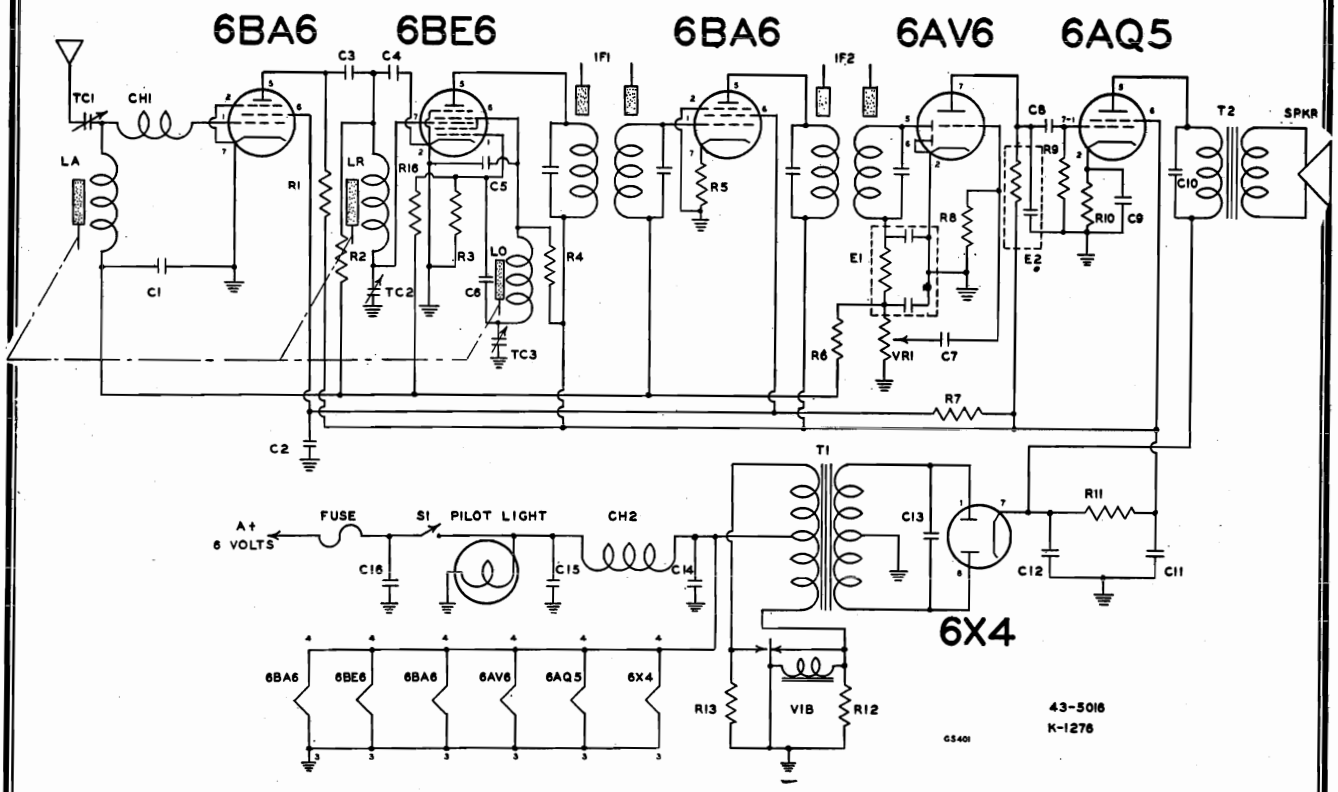

ALIGNMENT PROCEDURE

The following is for use only by competent service men having the proper equipment:

The alignment should be made with volume control fully on and the output voltage from the signal generator as low as possible to prevent A.V.C. action from interfering with the proper alignment. With the output meter connected across the voice coil of the speaker, the output meter reading for 50 milliwatts is 0.4 volts using a signal which is modulated at 400 c.p.s.

Adjust all trimmers for maximum output. After adjusting IF1 and IF2, "rock" the tuner to make sure that the I.F. coils are not tuned to an image. Repeat the alignment procedure given below as a final check.

©John F. Rider

Compliments of www.nucow.com

SIGNAL GENERATOR

Frequency	Dummy Antenna	Connection To Radio	Position Of Tuner	Adjust for Max. Output
257.5 KC	100 MMFD	6BE6 Grid Pin No. 7	Slugs Out	IF1 & IF2
1610 KC	100 MMFD	Ant. Jack	Slugs Out	TC3
1610 KC	100 MMFD	Ant. Jack	Slugs Out	TC2
1610 KC	100 MMFD	Ant. Jack	Slugs Out	TC1
1400 KC	100 MMFD	Ant. Jack	Tune in Signal Gen.	LA Slug & LR Slug

PARTS NUMBERS

CIRCUIT COMPONENTS

SYMBOL	PART NO.	DESCRIPTION	VALUE	RATING
TC2-TC3	VC1276-2	Dual Trimmer		
TC1	VC1276-1	Trimmer		
C9, C11, C12	C-15-15-25-3.5-.25	Electrolytic	15-15-25 MFD	350-350-25 volts
	C5G	Generator, capacitor	.5 MFD	
C14, C15	C52	Capacitor, paper	.5 MFD	200 volts
C1	CO472	Capacitor, paper	.047 MFD	200 volts
C2	CO474	Capacitor, paper	.047 MFD	400 volts
C8	CO156	Capacitor, paper	.015 MFD	600 volts
C7, C10	CO16	Capacitor, paper	.01 MFD	600 volts
C13	COO5616	Capacitor, buffer	.0056 MFD	1600 volts
C5	C14205M	Capacitor, mica	1420 MMFD	500 volts
C4	C3005M	Capacitor, mica	300 MMFD	500 volts
C6	C505M	Capacitor, mica	50 MMFD	500 volts
C3	C105M	Capacitor, mica	10 MMFD	500 volts
C16	C2002OM	Capacitor, spark	200 MMFD	2000 volts
LA	1276LA	Antenna coil		
LR	1276LR	R.F. coil		
LO	1276LO	Oscillator coil		
	LV-1276	Permeability tuner, complete		
CH2	L16	A choke		
CH1	L47	Spark choke	4.7 MH	
T1	PT1276	Vibrator transformer		
T2	OT1276	Output transformer		
IF1, IF2	IF1276	I.F. transformer		
R12, R13	R680.5	Resistor	68 ohms	1/2 watt
R5	R122.5	Resistor	1200 ohms	1/2 watt
R1, R3	R223.5	Resistor	22K ohms	1/2 watt
R4	R333.5	Resistor	33K ohms	1/2 watt
R9	R474.5	Resistor	470K ohms	1/2 watt
R2	R185.5	Resistor	1.8 megohm	1/2 watt
R6	R225.5	Resistor	2.2 megohm	1/2 watt
R8	R106.5	Resistor	10 megohm	1/2 watt
R10	R4511	Resistor	450 ohms	1 watt
R11	R1021	Resistor	1000 ohms	1 watt
R7	R2731	Resistor	27K ohms	1 watt
	R103S	Resistor, suppressor	10K ohms	
VR1	VR1276	Volume control	1 megohm	
S1	VR1276	Switch SP.S.T. on volume control		
E2	CR2	Capristor	270K ohm/100 MMFD	
E1	CR1	Diode filter unit	100-100 MFD/47K ohm	
SPKR	SPK1276	Speaker		
VIB	E659	Vibrator		
Fuse		Fuse 10 ampere		
		Pilot light No. 47		

MECHANICAL PARTS

PART NO.	DESCRIPTION
M-1801	Chassis and wrapper
M-1802	Top cover
M-1803	Speaker cover
M-1804	Panel
M-1805	Dial plate
H-1801	I.F. Mounting clip
H-1802	Speed nut
H-1803	Eyelet
H-1804	Spade lug No. 10
P-1801	Dial scale
A-1801	Dial cord assembly
M-1806	Dial pointer

PART NO.	DESCRIPTION
H-81651	Dial rivet
P-1802	Knob
GR14	Rubber grommet
H-81644-5	Vibrator socket
H-81644-6	Miniature tube socket
H-81644-9	Pilot light socket
H-81644-6	Antenna jack
H-81644-7	Speaker socket
H-81644-8	Fuse holder
H-81641-8	Terminal board No. 8
H-81641-3	Terminal board No. 3
H-81641-27	Terminal board No. 27
H12754	Vibrator clamp

©John F. Rider

Compliments of www.nucow.com

MODEL 1276

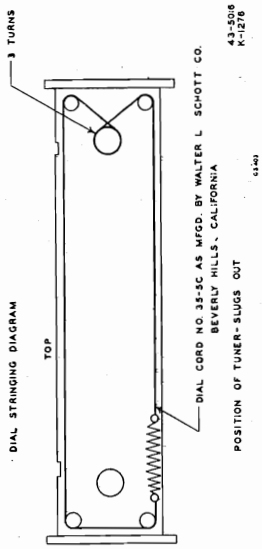

(Cut GS403, Dial stringing diagram)

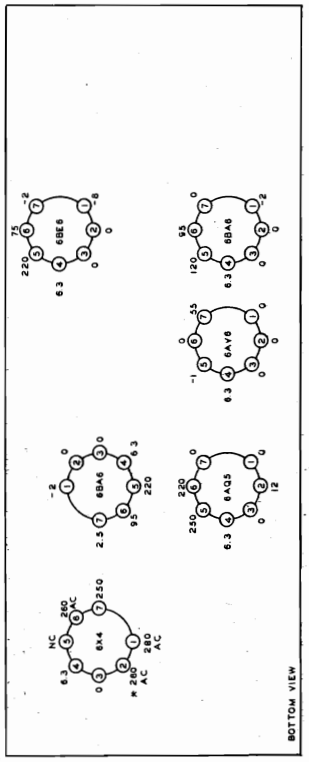

(Cut GS405, Voltage chart)

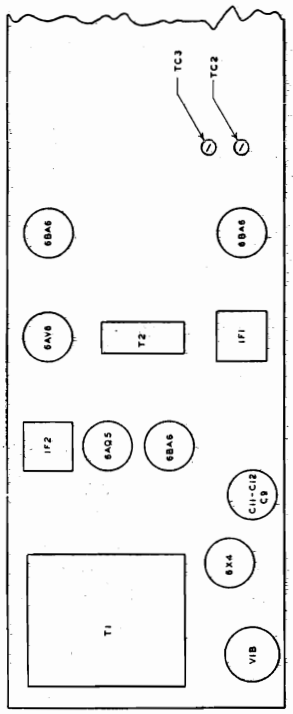

(Cut GS402, Chassis layout)

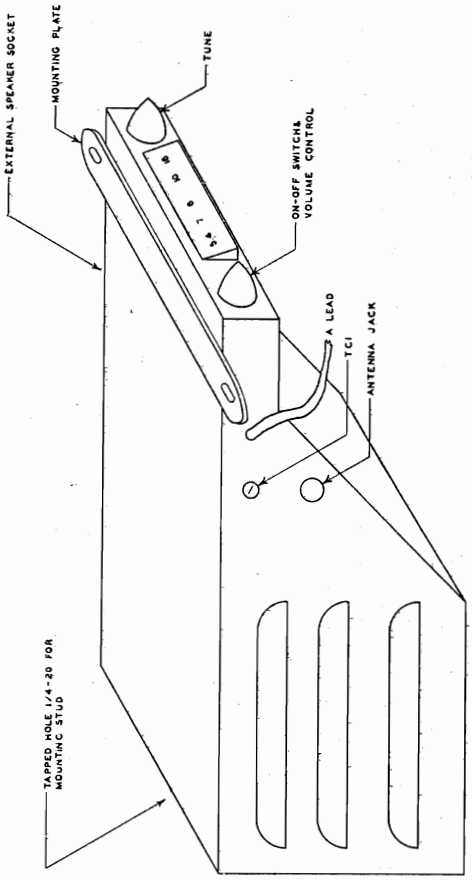

(Cut GS404, Pictorial view)

©John F. Rider

Compliments of www.nucow.com

ELIMINATION OF INTERFERENCE

Remove the coil-to-distributor high-tension lead from the distributor. Cut the lead two inches from the end, and screw the distributor resistor onto the coil lead. Then screw the short length onto the resistor, and plug the cable into the distributor cap.

One noise-filter condenser is furnished. Condenser must be connected to the output terminal of the generator (never to the field terminal). The generator-condenser bracket should be fastened to the generator housing, under the screw that holds the field. In some particularly stubborn cases of motor interference, one or more of the following procedures may be necessary:

A condenser can often be used to advantage on the electrically operated oil gauge or gas gauge. Connect the condenser lead to the terminal of the gauge, and bolt the condenser case securely to the frame or some other grounded part of the car.

Bonding the steering column to the fire wall with a short braid may also be effective. Clean the paint from the steering column at the fire wall where the column enters the motor compartment, and solder on a short piece of braid. Ground the end of the braid to the fire wall.

In some cases it may be necessary to ground the tubes and rods coming through the fire wall in order to reduce the interference. Clean them with emery cloth and spot-solder the braid, fastening the end under a convenient screw.

In some cases it may be necessary to connect an additional condenser to the ammeter or to the ignition switch.

It may be necessary to use a condenser on the voltage regulator. The condenser case should be mounted under one of the voltage-regulator mounting screws, or at some other convenient location, and the lead connected to the battery terminal of the voltage regulator.

Interference from electric clocks can be eliminated by connecting a condenser to the ammeter terminal. The case of the condenser must be securely grounded.

If tire-static interference is noted in a particular installation, static collector springs should be obtained and installed in the front wheels of the car.

©John F. Rider

Compliments of www.nucow.com

Compliments of www.nucow.com

MODEL 634B,
Ch. 120097B

MODEL 634B

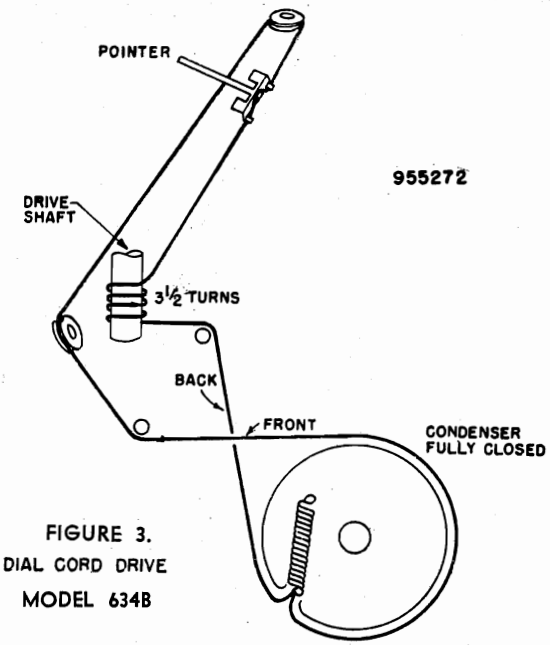

FIGURE 3.
DIAL CORD DRIVE
MODEL 634B

DESCRIPTION

TYPE: Model 634B is a Single band superheterodyne receiver with a 3-speed automatic record changer.

FREQUENCY RANGE: 540-1620 kc.

TYPE OF TUBES:

Models 634B—chassis 120097B

1—12BE6, converter
1—12BA6, i-f amplifier
1—12AT6, detector, a.v.c., a-f amplifier
1—50B5, power output
1—35W4, rectifier

POWER SUPPLY: 105-125 volts, 60 cycles a.c. only

POWER CONSUMPTION—50 watts.

CABINET PARTS LIST (MODEL 634B)

Part No.	DESCRIPTION
140339	Cabinet Assembly (Automatic Changer)
819050-1	Record Changer (3-Speed)
505015	Pickup Plug
580108	Shielded Lead
450041S	Knob—Station Selector—On-Off
450064	Knob—Tone Control
450063	Knob—Radio Phono.
520115-1	Glass Dial
445008	Cork Gasket
410863	Dial Holder
700052	Loop Antenna

CHASSIS PARTS LIST (CHASSIS 120097B)

Symbol	Part No.	DESCRIPTION
C-1	900066	Variable Condenser—Tuning
C-2		Variable Condenser—Oscillator
C-3	Pt. of C-1	Trimmer
C-4	Pt. of C-2	Trimmer
C-5	Pt. of T-1	
C-6	Pt. of T-1	
C-7	Pt. of T-2	
C-8	Pt. of T-2	
C-9A	470310	220 MMF Multiple Condenser
C-9B		2000 MMF Multiple Condenser
C-9C		220 MMF Multiple Condenser
C-9D		5000 MMF Multiple Condenser
C-10	923104	.01 MF Paper 400V
C-11	920030	.05 MF Paper 400V
C-12	925163	50 MF Electrolytic 150V
C-13		50 MF Electrolytic 150V
C-14	923105	.05 MF Paper 400V
C-15	920030	.05 MF Paper 400V
C-16	920030	.05 MF Paper 400V
C-17	920040	.1 MF Paper 200V
C-18	Pt. of L-2	2.2 MMF Ceramic
L-1	716044	Oscillator Coil
L-2	700047	Loop
P-1	583028P	Line Cord & Plug
P-2	505015	Pickup Plug
R-1	351490	15 Meg. Carbon ½W±20%
R-2	340810	22,000 Ohm. Carbon ½W±10%
R-3	340270	120 Ohm. Carbon ½W±10%
R-4	351330	3.3 Meg. Carbon ½W±20%
R-5	510069-1	500,000 Ohm. Volume Control and Switch
R-6	351490	15 Meg. Carbon ½W±20%
R-7	351130	470,000 Ohm. Carbon ½W±20%
R-8	351130	470,000 Ohm. Carbon ½W±20%
R-9	340290	150 Ohm. Carbon ½W±10%
R-10	370490	1,000 Ohm. Carbon 1W±20%
R-11	370150	39 Ohm. Carbon 1W±20%
SP-1	180052	PM Speaker—5"
SW-1	Pt. of R-5	On-Off Switch
SW-2	Pt. of R-5	Radio-Phono Switch
SW-3	510068	Tone Control Switch
T-1	720055	1st I.F. Transformer
T-2	720055	2nd I.F. Transformer
T-3	734055	Output Transformer
V-1	800525	Vacuum Tube—12BE6
V-2	800524	Vacuum Tube—12BA6
V-3	800523	Vacuum Tube—12AT6
V-4	800527	Vacuum Tube—50B5
V-5	800526	Vacuum Tube—35W4
V-6	807000	Dial Light
X-1	585051	Cable & Socket Assy.—Motor
X-2	508003	Pickup Socket

©John F. Rider

Compliments of www.nucow.com

MODEL 634B,
Ch. 120097B

ALIGNMENT INSTRUCTIONS — MODEL 634B

1. To position pointer, turn variable condenser fully closed and set pointer to reference mark at low-frequency end of dial backplate.
2. Use isolation transformer if available. If not, connect a .1 mfd. condenser in series with low side of signal generator and B—.
3. Volume control should be at maximum position; radio-phono switch in radio position. Output of signal generator should be no higher than necessary to obtain an output reading. Use an insulated screw driver for adjusting.

STEP	DUMMY ANTENNA	SIGNAL GENERATOR OUPLING	SIGNAL GENERATOR FREQUENCY	RADIO DIAL SETTING	OUTPUT METER	ADJUST	REMARKS
1	.1 mfd.	High side to grid (pin 7) of V1 (12BE6). Low side to chassis.	455 KC	Variable condenser fully open.	Across voice coil.	T2, T1	Adjust for maximum output. If isolation transformer is not used, reduce dummy ant. to .001 mfd. to reduce hum modulation.
2	200 mmf.	Form loop of several turns and radiate signal into receiver.	1620 KC	"	Across voice coil.	Trimmer C-4. (Osc.)	Adjust for maximum output.
3	200 mmf.	"	1400 KC	Tune for maximum output.	Across voice coil.	Trimmer C-3. (Ant.)	Adjust for maximum output.

950137

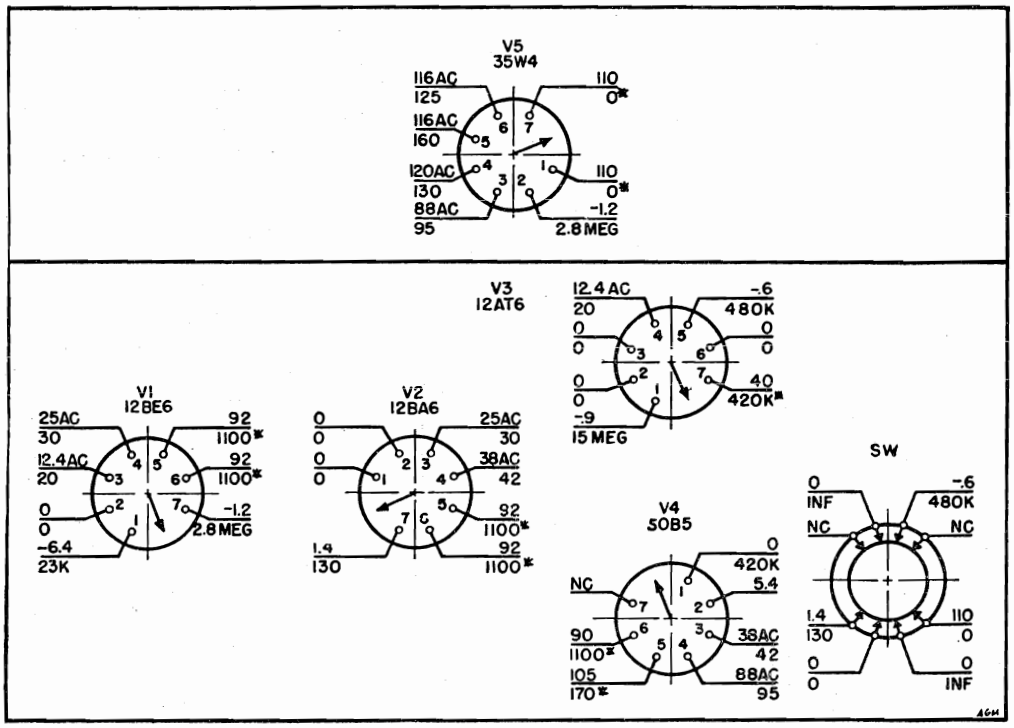

FIG. 2—VOLTAGE AND RESISTANCE CHECK CHART (CHASSIS 120097B)

CONDITIONS FOR VOLTAGE AND RESISTANCE READINGS

1. Voltages indicated are positive d.c., resistances are in ohms, unless otherwise indicated.
2. Measurements made with voltohmyst or equivalent.
3. Line voltage maintained at 120 volts a.c. for voltage measurements.
4. Socket connections are shown as bottom views, with measurements from pin to common negative.
5. Volume control at maximum; radio-phono switch in radio position; no signal applied for Model 634B measurements.
6. Nominal tolerance on component values makes possible a variation of ± 15% in voltage and resistance readings.
7. On the diagrams, upper values are voltage; lower values are resistance. NC denotes no connection, K is kilohms, MEG is megohms, INF. is infinity. Resistances marked * are measured to pin 7 of rectifier (B+).

©John F. Rider

Compliments of www.nucow.com

MODEL 634B,
Ch. 120097B

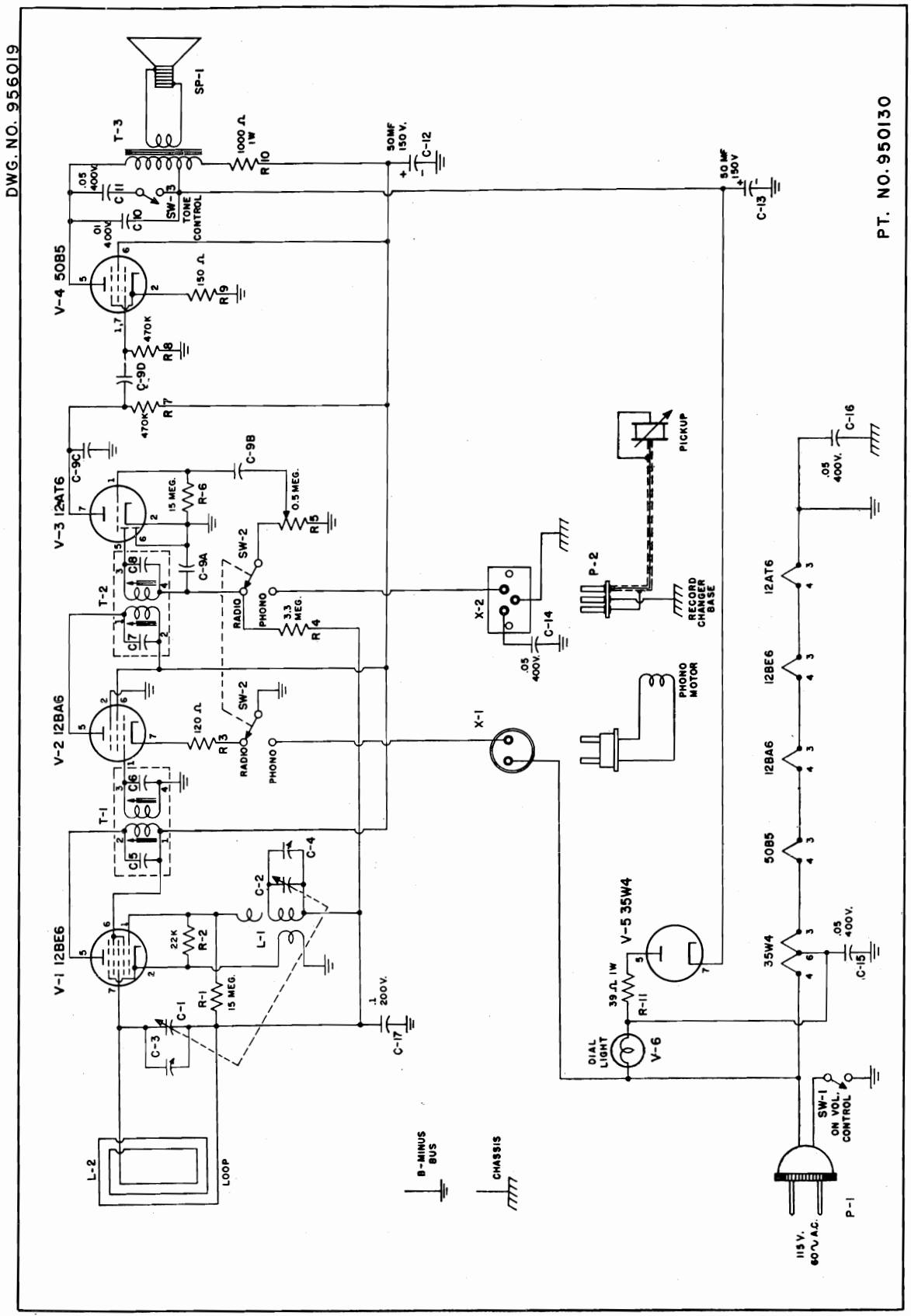

FIGURE I — SCHEMATIC DIAGRAM (CHASSIS 120097B)

©John F. Rider

Compliments of www.nucow.com

MODEL 636,
Ch. 120106A

DESCRIPTION

TYPE: Single-band (AM) superheterodyne.

FREQUENCY RANGE: 540-1620 kc.

TYPE OF TUBES:

- 1—12BE6, converter
- 1—12BA6, i-f amplifier
- 1—12AT6, detector, a.v.c., a-f amplifier
- 1—50B5, power output
- 1—35W4, rectifier

POWER SUPPLY: a.c. or d.c.

VOLTAGE RATING: 105-125 volts.

POWER CONSUMPTION: 30 watts.

CURRENT DRAIN: 0.24 amp. at 117 volts a.c.

GENERAL NOTES

1. If replacements are made or the wiring disturbed in the r-f section of the circuit, the receiver should be carefully realigned.
2. In operating the receiver on d.c., it may be necessary to reverse the line plug for correct polarity.
3. All models have self-contained antennas and do not require additional antenna connections. For permanent home installation, however, if it is desired to improve reception of weak stations, an additional outdoor antenna may be used. For this purpose a lead has been brought out at the rear, near the line cord. Use no ground connection.
4. The self-contained loop antenna operates at maximum efficiency when its position is at right angles to the broadcasting source. It is important, therefore, once the station is tuned in, to rotate the cabinet back and forth through a quarter of a circle (90 degrees), leaving it at the position where the station is received with maximum volume.

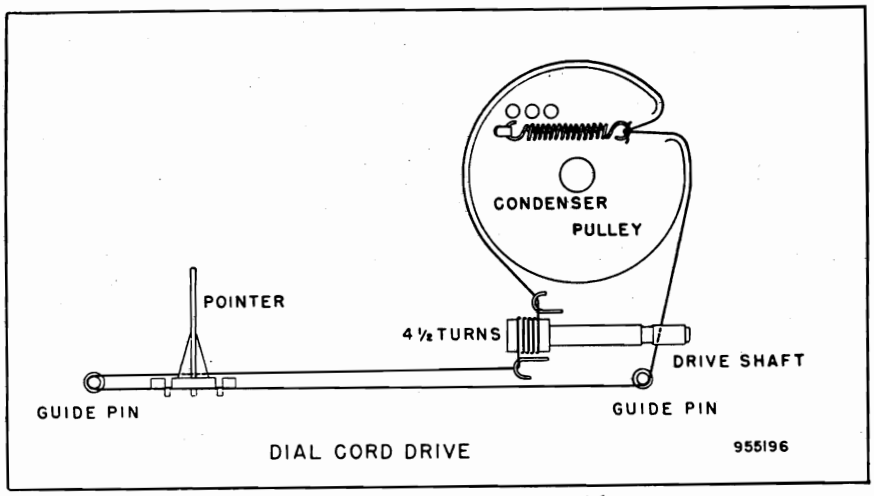

Fig. 2—Dial Cord Stringing, Model 636

©John F. Rider

Compliments of www.nucow.com

MODEL 636,
Ch. 120106A

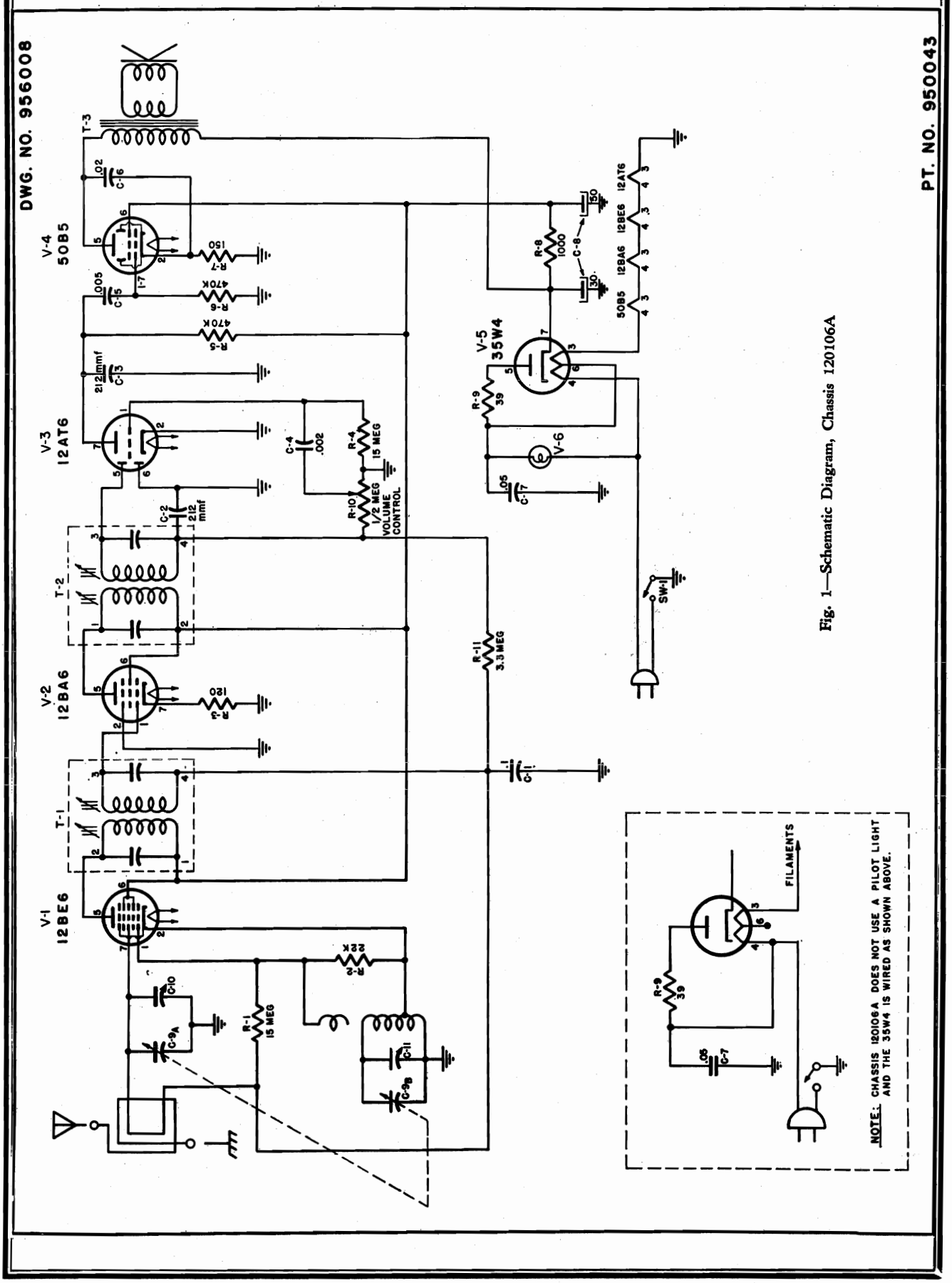

Fig. 1—Schematic Diagram, Chassis 120106A

©John F. Rider

Compliments of www.nucow.com

MODEL 636,
Ch. 120106A

CONDITIONS FOR VOLTAGE AND RESISTANCE READINGS

1. Voltages indicated are positive d.c., resistances are in ohms, unless otherwise indicated.
2. Measurements made with voltohmyst or equivalent.
3. Line voltage maintained at 117 volts a.c. for voltage measurements.
4. Socket connections are shown as bottom views, with measurements from pin to common negative.
5. Volume control at maximum; no signal applied for voltage measurements.
6. Nominal tolerance on component values makes possible a variation of ± 15% in voltage and resistance readings.
7. On the diagram, upper values are voltage; lower values are resistance. NC denotes no connection, K is kilohms, MEG is megohms. Resistances marked * are measured to pin 7 of rectifier (B+).

ALIGNMENT INSTRUCTIONS

1. To position pointer, turn variable condenser fully closed and set pointer to reference mark at low-frequency end of dial backplate.
2. Use isolation transformer if available. If not, connect a .1 mfd. condenser in series with low side of signal generator and B—.
3. Volume control should be at maximum position. Output of signal generator should be no higher than necessary to obtain an output reading. Use an insulated screw driver for adjusting.

STEP	DUMMY ANTENNA	SIGNAL GENERATOR COUPLING	SIGNAL GENERATOR FREQUENCY	RADIO DIAL SETTING	OUTPUT METER	ADJUST	REMARKS
1	1. mfd.	High side to grid (pin 7) of V1 (12BE6). Low side to chassis.	455 KC	Variable condenser fully open.	Across voice coil.	T2, T1 (A1, A2, A3, A4)	Adjust for maximum output. If isolation transformer is not used, reduce dummy ant. to .001 mfd. to reduce hum modulation.
2		Form loop of several turns and radiate signal into receiver.	1620 KC	"	Across voice coil.	Trimmer A5 (Osc.)	Adjust for maximum output.
3		"	1400 KC	Tune for maximum output.	Across voice coil.	Trimmer A6 (Ant.)	Adjust for maximum output.

955312

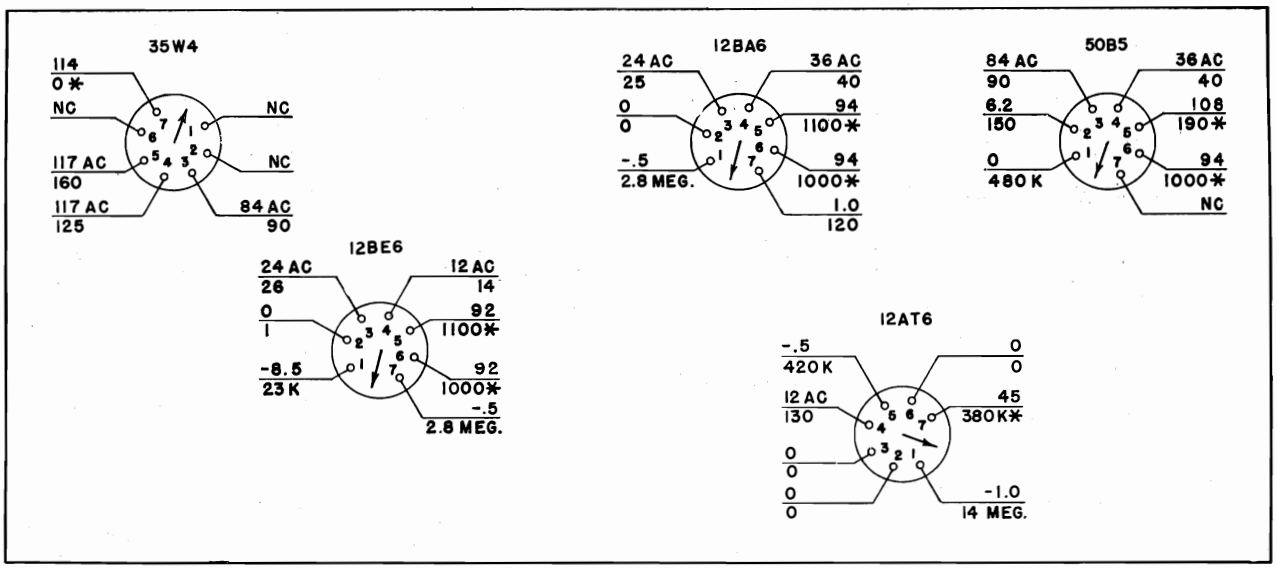

BOTTOM VIEW OF CHASSIS 120106A

Fig. 3—Voltage and Resistance Diagram, Chassis 120106A

©John F. Rider

Compliments of www.nucow.com

MODEL 636,
Ch. 120106A

REPLACEMENT PARTS LIST

SYMBOL	PART NO.	DESCRIPTION	SYMBOL	PART NO.	DESCRIPTION
R-1	351490	15 meg, ½ watt, ±20%	C-7	920030	.05 mfd., 400 v.
R-2	Pt. of 716018	22,000 ohms, ½ w., ±10%	C-8	925061	Electrolytic, 30-50 mfd., 150 v.
R-3	340270	120 ohms, ½ w., ±10%	C-9 A & B	900023	Variable capacitor
R-4	351490	15 meg ohms, ½ w., ±20%	C-10 & C-11	Pt. of 900023	Trimmers
R-5	351130	470,000 ohms, ½ w., ±20%	L-1	700045	Ant. loop and back
R-6	351130	470,000 ohms, ½ w., ±20%	L-2	716018	Oscillator coil
R-7	340290	150 ohms, ½ w., ±10%			
R-8	370490	1,000 ohms, 1 w., ±10%	T-1	720021	1st I.F. transformer
R-9	370150	39 ohms, 1 w., ±10%	T-2	720021	2nd I.F. transformer
R-10	390062	½ meg ohms, volume control	T-3	734023	Output transformer
R-11	351330	3.3 meg ohms, ½ w., ±20%			
			SW-1	Pt. of 390062	On-off switch
C-1	920040	.1 mfd., 200 v.	V-1	800528	12BE6 tube
C-2	Pt. of 470310	212 mmf., ±20%, ceramic.	V-2	800528	12BA6 tube
C-3	Pt. of 470310	212 mmf., ±20%, ceramic.	V-3	800523	12AT6 tube
C-4	Pt. of 470310	.002 mfd., 400 v.	V-4	800527	50B5 tube
C-5	Pt. of 470310	.005 mfd., 400 v.	V-5	800526	35W4 tube
C-6	920020	.02 mfd., 400 v.			

CABINET AND DIAL PARTS

PART NO.	DESCRIPTION
140329	Cabinet, walnut
460078	Grille
575448	Baffle
460088	Knob
520104	Dial backplate
530002	Dial drive cord (31")
280055	Dial drive shaft
587040	Dial drive spring
525033	Pointer

©John F. Rider

Compliments of www.nucow.com

MODEL 640,
Ch. 120112

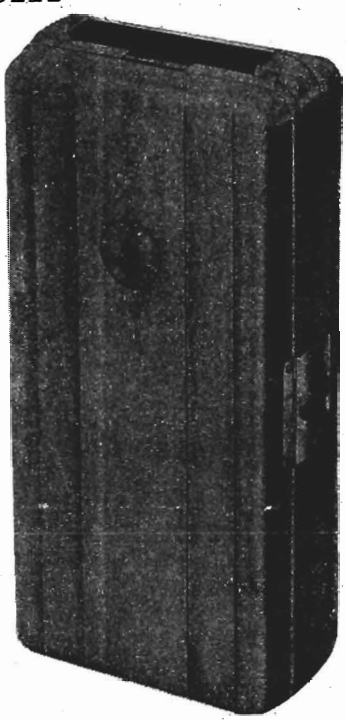

VOLTAGE RATING:
"A" Battery—1.5 volts
"B" Battery—67.5 volts

CURRENT DRAIN:
"A" Battery—0.25 amp.
"B" Battery—0.0075 amp.

DESCRIPTION

TYPE: Pocket portable (battery operated) superheterodyne.

FREQUENCY RANGE: 540-1600 kc.

TYPE OF TUBES:
1—1R5, converter
1—1T4, i-f amplifier
1—1U5, detector, a.v.c., a-f amplifier
1—3S4, power output

POWER SUPPLY: "A" and "B" batteries.

GENERAL NOTES

1. If replacements are made in the r-f section of the circuit, the receiver should be carefully realigned.
2. The receiver has a self-contained antenna and does not require additional antenna or ground connections.
3. The self-contained loop antenna has directional properties. It is important, therefore, once the station is tuned in, to rotate the cabinet back and fourth through a quarter of a circle (90 degrees), leaving it at the position where the station is received with maximum volume.
4. The receiver is turned on when the lid is open and turned off when the lid is closed. Always close the lid when the set is not in use.
5. Remove batteries as soon as they are exhausted. The "A" battery will require more frequent replacement than the "B" battery.
6. Replace the 1.5 volt "A" battery with standard D-size flashlight cell (1—5/16" dia.). Replace 67.5 volt "B" battery with Eveready Minimax No. 467 or equivalent.

BATTERY REPLACEMENT

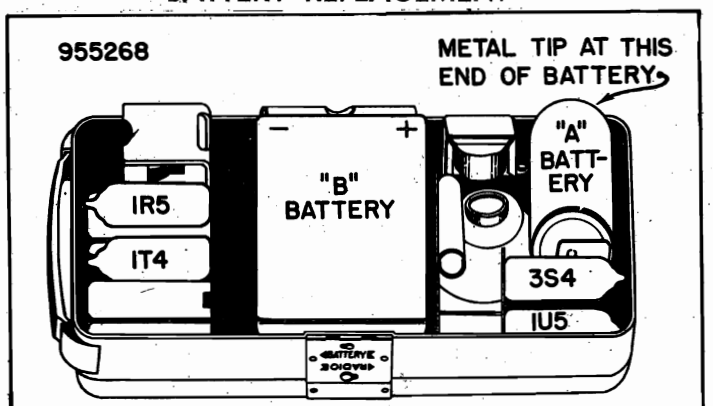

BATTERY AND TUBE LOCATIONS
Fig. 1. Battery Replacement Diagram

1. Slide the button on the release catch marked "Battery" in the direction of the arrow. This loosens the bottom shell and permits it to be swung open on the hinge, making the batteries accessible.
2. Insert the batteries as shown in the above diagram.
3. To reassemble, hold the chassis face down with the batteries in place. Close the bottom shelf over the chassis and press the rear shell so that it snaps into place.

©John F. Rider

Compliments of www.nucow.com

MODEL 640,
Ch. 120112

ALIGNMENT INSTRUCTIONS

1. To position pointer, turn variable condenser fully closed and set pointer to reference mark at low-frequency end of dial back-plate.
2. Volume control should be at maximum; output of signal generator should be no higher than necessary to obtain an output reading.
3. Maintain loop in same position relative to chassis, if chassis is removed from cabinet.

	DUMMY ANTENNA	SIGNAL GENERATOR COUPLING	SIGNAL GENERATOR FREQUENCY	RADIO DIAL SETTING	OUTPUT METER	ADJUST	REMARKS
1	.1 mfd.	High side to pin 6 (grid) of 1R5. Low side to chassis.	455 KC.	Tuning condenser fully open.	Across voice coil.	T2 and T1	Adjust for maximum output.
2		Loop	1620 KC.	"	"	C4 (osc. trimmer)	Fashion loop of several turns of wire and radiate signal into loop of receiver. Adjust for maximum output.
3		"	1400 KC.	Tune for maximum output.	"	C3 (Ant. trimmer)	Adjust for maximum output.

REPLACEMENT PARTS LIST

Symbol	†Part No.	DESCRIPTION	Symbol	†Part No.	DESCRIPTION
C1, C2	900068	Two gang variable condenser	R2	340470	820 ohms, ½ watt, ±10%
C3	Part of C1	Trimmer, antenna	R3	390117	1 megohm, volume control
C4	Part of C2	Trimmer, oscillator	R4	351450	10 megohms, ½ watt, ±20%
C5, C6	Part of T1	Trimmers	R5	351330	3.3 megohms, ½ watt, ±20%
C7, C8	Part of T2	Trimmers	R6	351130	470,000 ohms, ½ watt, ±20%
C9	928013	100 mmf., ceramic	R7	351330	3.3 megohms, ½ watt, ±20%
C10	920495	.001 mfd., 200 volt	R8	340730	10,000 ohms, ½ watt, ±10%
C11	920496	.005 mfd., 200 volt	R9	351330	3.3 megohms, ½ watt, ±20%
C12	928104	212 mmf., ceramic	SP1	180064	PM speaker
C13	920495	.001 mfd., 200 volt	T1	720111	I-F transformer
C14	928013	100 mmf., ceramic	T2	720111	I-F transformer
C15	920494	.05 mfd., 200 volt	T3	734056	Ouptut transformer
C16	920120	.02 mfd., 100 volt	T4	716047	Oscillator coil
C17	925164	16 mfd., 100 volt elect.	V1	800110	1R5, converter
C18	920485	.01 mfd., 100 volt	V2	800130	1T4, i-f amplifier
L1	700048	Loop antenna	V3	800019	1U5, det., a.v.c., a-f amp.
R1	350970	100,000 ohms, ½ watt. +20%	V4	800170	3S4, power output

CABINET AND DIAL PARTS

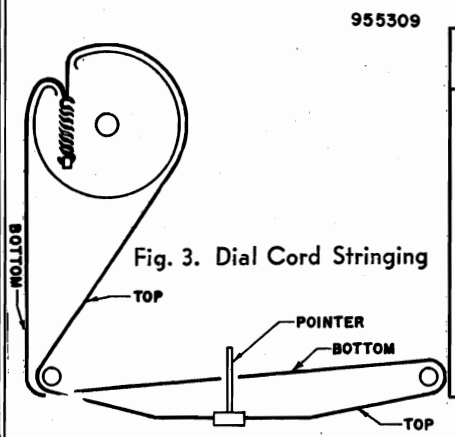

Fig. 3. Dial Cord Stringing

†PART No.	DESCRIPTION	†PART No.	DESCRIPTION
140312	Case shell—saddle tan	460148	Handle
140313	Top cover—sand	410845	Snap latch—male
460144	Knob—sand	410850	Dual snap latch assembly
140314	Bottom cover—sand	587008	Spring
460147	Handle catch—saddle tan	700048	Loop
140336	Case shell—sand	630110	Loop cover
140337	Top cover—saddle tan	575528	Grille and baffle assembly
460145	Knob—saddle tan	520121	Dial crystal
140338	Bottom cover—saddle tan		
460149	Handle catch—sand		

†Specify part number when ordering.

©John F. Rider

Compliments of www.nucow.com

MODEL 640,
Ch. 120112

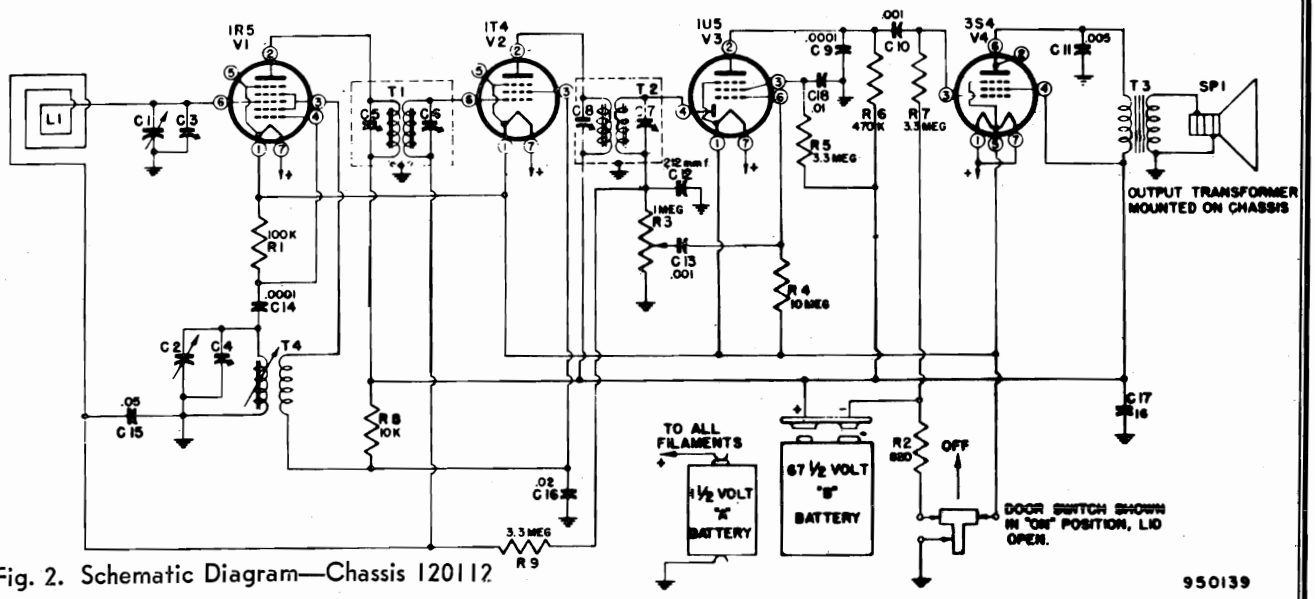

Fig. 2. Schematic Diagram—Chassis 120112

CONDITIONS FOR VOLTAGE AND RESISTANCE READINGS

1. Voltages indicated are positive d.c., resistances in ohms, unless otherwise noted.
2. Measurements made with voltohmyst or equivalent.
3. Socket connections are shown as bottom views, with measurements from pin to chassis.
4. Volume control at maximum, no signal applied, for voltage measurements.
5. Nominal tolerance in component valves makes possible a variation of ± 15% in readings.
6. On the diagram, upper valves are voltage, lower valves are resistance; K is Kilohms, MEG is megohms. Resistance marked * are measured to B+.

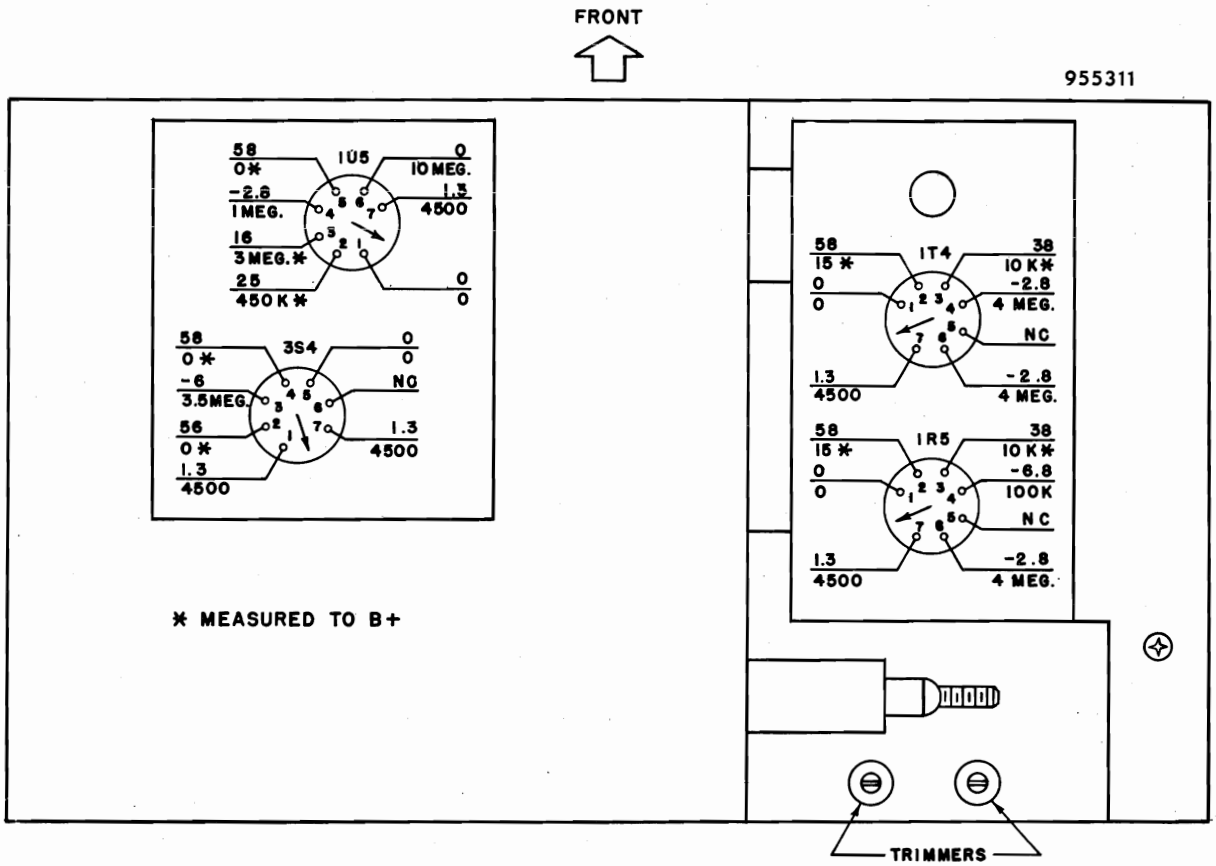

Fig. 4. Voltage and Resistance Diagrams, Chassis 120112

©John F. Rider

Compliments of www.nucow.com

MODEL 641B,
Ch. 120125B

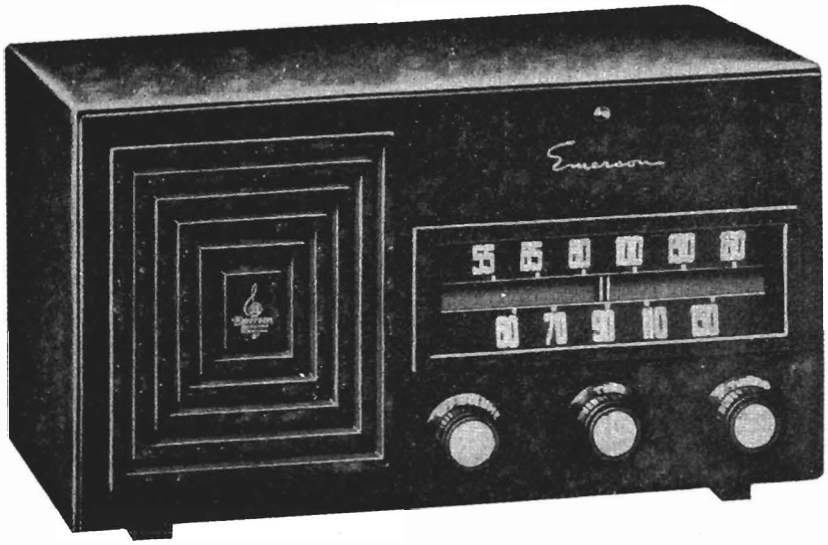

Model—641B
Chassis—120125B

DESCRIPTION

TYPE: Single band (AM) superheterodyne

FREQUENCY RANGE: 540-1620 KC.

TYPES OF TUBES:

- V-1-6BJ6 converter
- V-2-6BJ6 oscillator
- V-3-6BJ6 1st i.f. amplifier
- V-4-6BJ6 2nd i.f. amplifier
- V-5-12AT6 Detector, a.v.c., a-f amplifier
- V-6-50C5 Power output
- V-7-35W4 Rectifier

POWER SUPPLY: A.c. or d.c.

VOLTAGE RATING: 115 volts

POWER CONSUMPTION: 30 watts

CURRENT DRAIN: 0.26 amp. at 117 volts a.c.

GENERAL NOTES

1. If replacements are made or the wiring disturbed in the r-f section of the circuit, the receiver should be carefully realigned.
2. In operating the receiver on d.c., it may be necessary to reverse the line plug for correct polarity.
3. The receiver has a self-contained antenna, and does not require additional antenna connections. For permanent home installations, however, if it is desired to improve reception of weak stations, an additional outdoor antenna may be used. For this purpose a lead has been brought out in the rear. Use no ground connection.
4. The self-contained loop antenna operates at maximum efficiency when its position is at right angles to the broadcasting source. It is important, therefore, once the station is tuned in, to rotate the cabinet back and forth through a quarter of a circle (90 degrees), leaving it at the position where the station is received with maximum volume.

INSTRUCTIONS FOR VOLTAGE AND RESISTANCE READINGS

1. Voltage readings are in d.c. volts and resistance readings in ohms unless otherwise specified.
2. A.C. and D.C. measurements are taken with a V.T.V.M.
3. Measured values are from socket pin to common negative (B—).
4. Line voltage maintained at 115V A.C. for voltage readings.
5. Nominal tolerance on component values makes possible a variation of ± 15% in voltage and resistance readings.
6. Volume control at maximum with no signal applied, for voltage measurements.

VOLTAGE READINGS FOR CHASSIS 120125-B

SYMBOL	TUBE	PIN 1	PIN 2	PIN 3	PIN 4	PIN 5	PIN 6	PIN 7
V-1	6BJ6	-1.2 DC	1 DC	18 AC	12 AC	85 DC	35 DC	0
V-2	6BJ6	-9.2 DC	0	24 AC	18 AC	85 DC	85 DC	0
V-3	6BJ6	0	1.4 DC	30 AC	36 AC	68 DC	85 DC	0
V-4	6BJ6	-1.3 DC	.65 DC	30 AC	24 AC	85 DC	85 DC	0
V-5	12AT6	-.8 DC	0	0	12 AC	0	.65 DC	42 DC
V-6	50C5	5.4 DC	0	36 AC	80 AC	0	85 DC	100 DC
V-7	35W4	85 DC	NC	80 AC	115 AC	110 AC	110 AC	110 DC

RESISTANCE READINGS FOR CHASSIS 120125-B

SYMBOL	TUBE	PIN 1	PIN 2	PIN 3	PIN 4	PIN 5	PIN 6	PIN 7
V-1	6BJ6	4.2 meg.	1100	22	16	500,000	1 meg.	0
V-2	6BJ6	24,000	1	30	22	500,000	500,000	0
V-3	6BJ6	20	220	38	46	500,000	500,000	0
V-4	6BJ6	4.3 meg	120	38	30	500,000	500,000	0
V-5	12AT6	10 meg	0	0	16	0	550,000	1 meg.
V-6	50C5	150	400,000	46	100	400,000	500,000	500,000
V-7	35W4	500,000	NC	100	135	175	130	500,000

©John F. Rider

Compliments of www.nucow.com

MODEL 641B,
Ch. 120125B

ALIGNMENT PROCEDURE

1. To set pointer, turn variable condenser fully closed and set pointer at mark near left end of dial backplate.
2. Use isolation transformer if available. If not, connect a 0.1 mfd. condenser in series with low side of signal generator and B minus bus.
3. Volume control should be at maximum position; output of signal generator should be not higher than necessary to obtain an output reading.
4. Use an insulated alignment screwdriver for adjusting.

STEPS	DUMMY ANTENNA	SIGNAL GENERATOR COUPLING	SIGNAL GENERATOR FREQUENCY	RADIO DIAL SETTING	METER OUTPUT	ADJUST	REMARKS
1	0.1 mfd.	High side to pin 1 (grid) of 6BJ6 (V1). Low side to B minus Bus.	455 kc	Variable condenser fully open.	Across voice coil.	A1, A2 (2nd i-f trans. T2) A3, A4 (1st i-f trans. T1)	Adjust for maximum output. If isolation transformer is not used, reduce dummy antenna to 0.001 mfd. to reduce hum modulation.
2	200 mmfd.	High side to external antenna lead. Low side to B minus Bus.	1620 kc	Variable condenser fully open.	Across voice coil.	A5 (Trimmer cond. C5).	Adjust for maximum output.
3	200 mmfd.	High side to external antenna lead. Low side to B minus Bus.	1400 kc	Tune for maximum output.	Across voice coil.	A6 (Trimmer cond. C2).	Adjust for maximum output.

CHASSIS PARTS LIST (Chassis 120125B)

Symbol	PART NO.	DESCRIPTION
C- 1	PT. OF L-1	2.2 mmf.
C- 2	PT. OF 900077	Trimer - r.f.
C- 3	PT. OF 900077	Variable capacitor - r.f. section
C- 4	920030	.05 mf paper 400v
C- 5	PT. OF 900077	Trimmer - osc.
C- 6	PT. OF 900077	Variable capacitor - osc. section
C- 7	920020	.02 mf paper 400v
C- 8	920020	.02 mf paper 400v
C- 9	928104	212 mmf ceramic
C-10	PT. OF T-2	100 mmf
C-11	PT. OF 470310	220 mmf } Multiple Capacitor
C-12	PT. OF 470310	.002 mf } Multiple Capacitor
C-13	PT. OF 470310	220 mmf } Multiple Capacitor
C-14	PT. OF 470310	.005 mf } Multiple Capacitor
C-15	920545	.002 mf paper 400v
C-16	920020	.02 mf paper 400v
C-17	920020	.05 mf paper 400v
C-18	PT. OF. 925187	80 mf electrolytic 150v
C-19	PT. OF. 925187	40 mf electrolytic 150v
C-20	920040	.1 mf paper 200v
L- 1	700054	LOOP ANTENNA
L- 2	716055	OSCILLATOR - COIL
R- 1	340492	1,000 ohm carbon ½w -10%
R- 2	PT. OF L-2	22,000 ohm
R- 3	341050	220,000 ohm carbon ½w -10%
R- 4	340332	220 ohm carbon ½w -10%
R- 5	340632	3,900 ohm carbon ½w -10%
R- 6	350970	100,000 ohm carbon ½w ±20%
R- 7	340272	120 ohm carbon ½w ±10%
R- 8	351330	3.3 megohm carbon ½w ±20%
R- 9	340890	47,000 ohm carbon ½w ±10%
R-10	390152	500,000 ohm volumn control
R-11	351450	10 megohm carbon ½w ±20%
R-12	351130	470,000 ohm carbon ½w ±20%
R-13	390157	400,000 ohm tone control
R-14	340292	150 ohm carbon ½w ±10%
R-15	370150	39 ohm carbon 1w ±10%
R-16	370490	1,000 ohm carbon 1w ±10%
SP-1	180074	Speaker - pm - 6"
SW-1	PT. of R-10	On-off switch
T-1	720033	1st i.f. transformer
T-2	720125	2nd i.f. transformer
T-3	734061	Output transformer
V-1	800023	Vacuum tube - 6BJ6
V-2	800023	Vacuum tube - 6BJ6
V-3	800023	Vacuum tube - 6BJ6
V-4	800023	Vacuum tube - 6BJ6
V-5	800523	Vacuum tube - 12AT6
V-6	800032	Vacuum tube - 50C5
V-7	800526	Vacuum tube - 35W4
V-8	807000	Pilot light

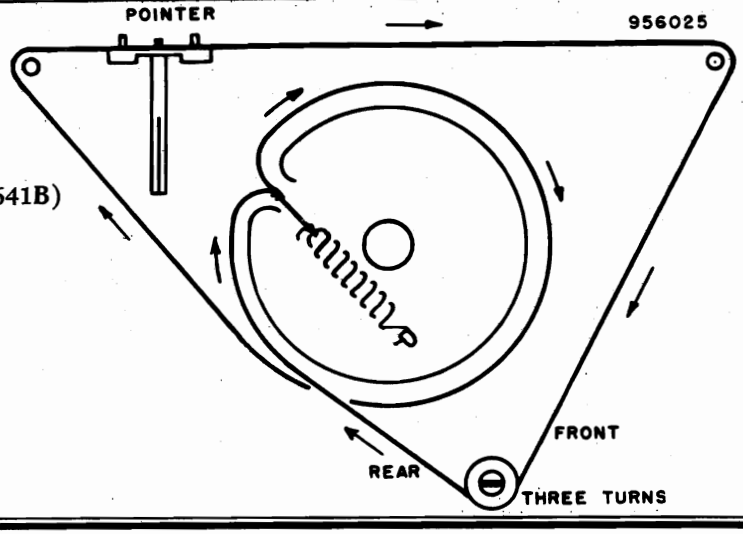

CABINET PARTS LIST (Model 641B)

Part No.	DESCRIPTION
140359	Cabinet
520133	Crystal
575649	Baffle and grill cloth
450068s	Knob
587011	Knob spring insert — ¼"

©John F. Rider

Compliments of www.nucow.com

MODEL 641B,
Ch. 120125B

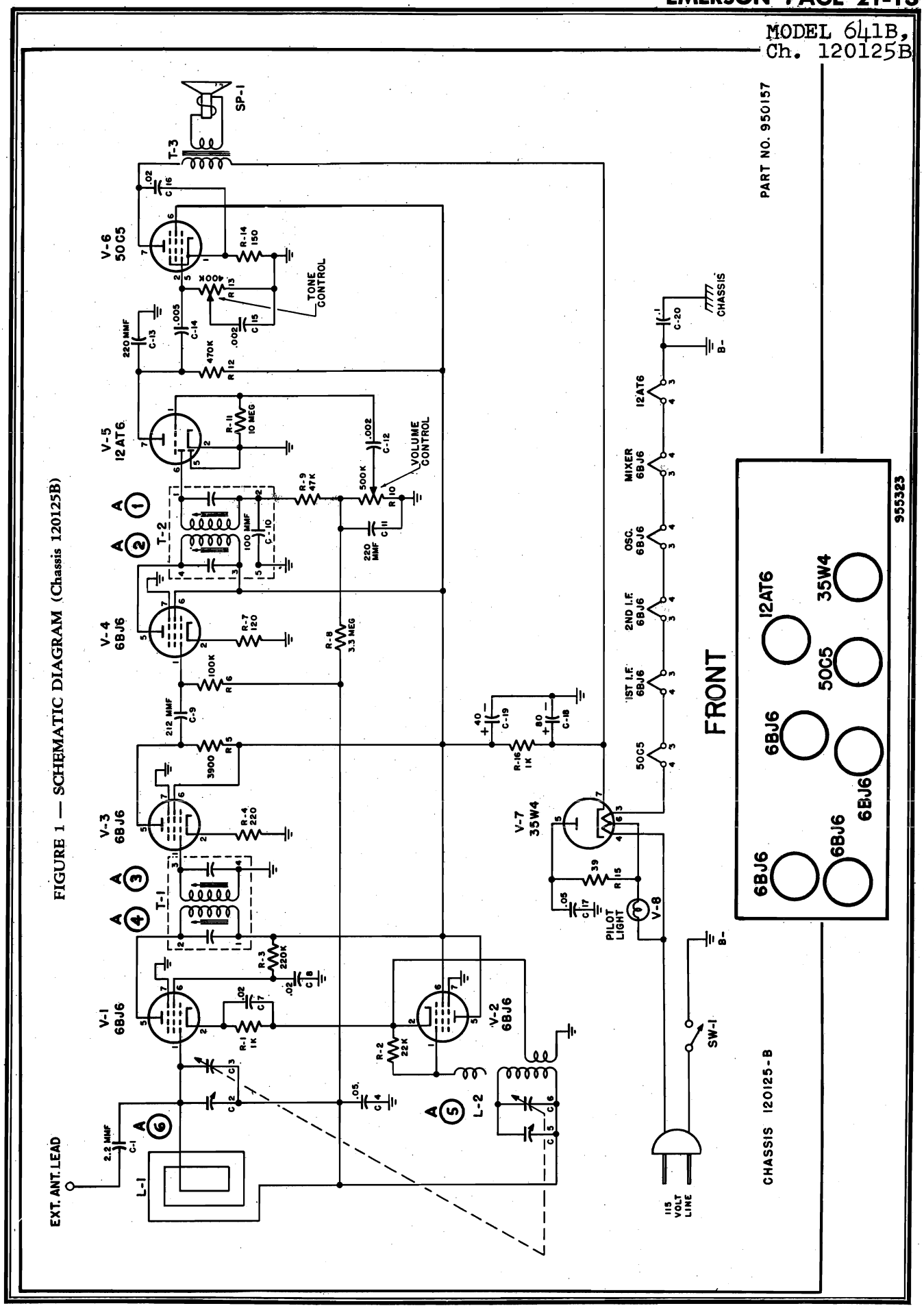

FIGURE 1 — SCHEMATIC DIAGRAM (Chassis 120125B)

©John F. Rider

Compliments of www.nucow.com

MODELS 642, Ch. 120117A; 652, Ch. 120032B; 653, Ch. 120080B

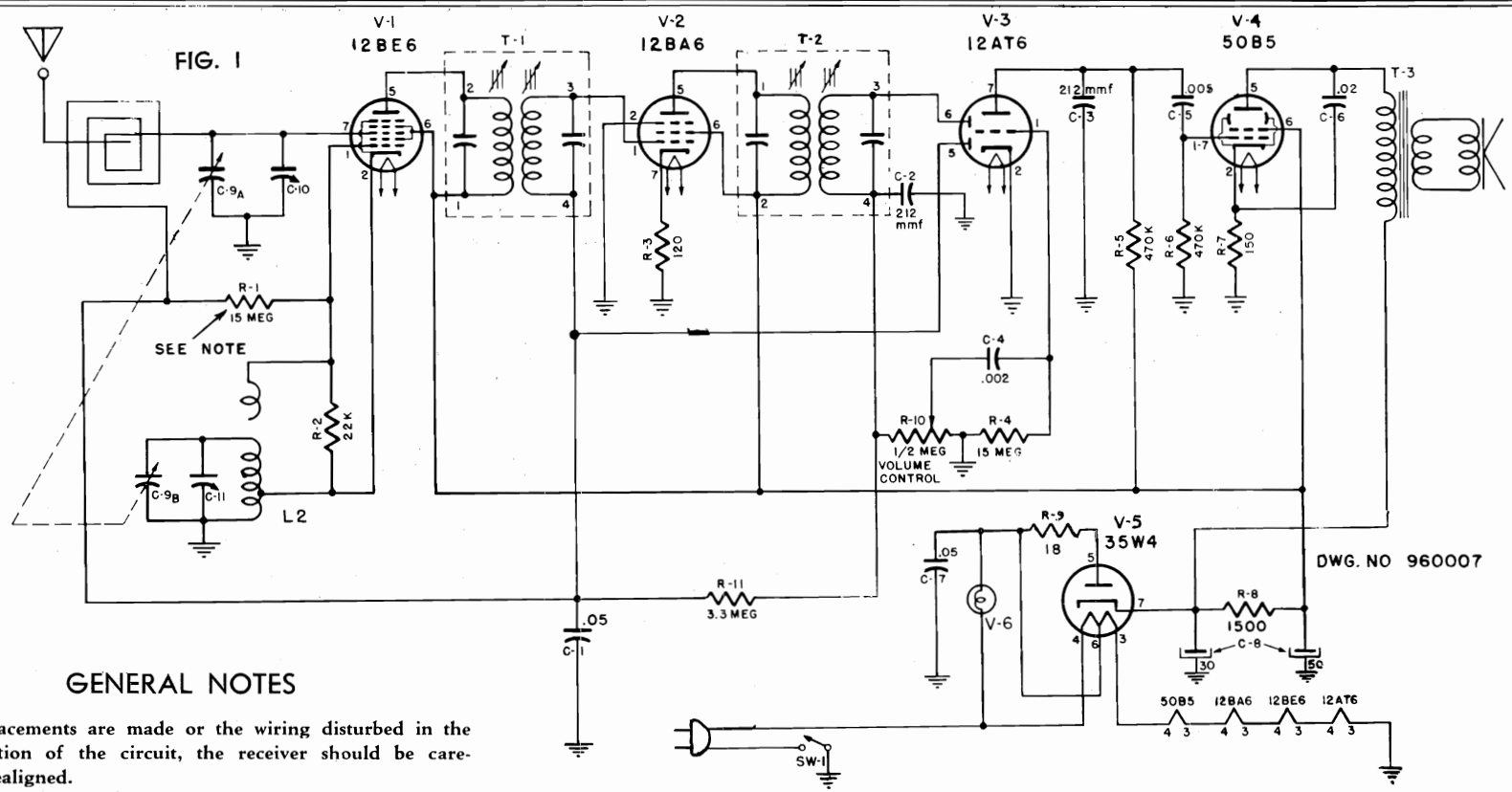

SCHEMATIC FOR MODEL 642 USING CHASSIS 120117A.

NOTE: R-1 NOT IN LATER SETS.

GENERAL NOTES

1. If replacements are made or the wiring disturbed in the r-f section of the circuit, the receiver should be carefully realigned.
2. In operating the receiver on d.c., it may be necessary to reverse the line plug for correct polarity.
3. All models have self-contained antennas and do not require additional antenna connections. For permanent home installations, however, if it is desired to improve reception of weak stations, an additional outdoor antenna may be used. For this purpose a lead has been brought out in the rear near the line cord. Use no ground connection.
4. The self-contained loop antenna operates at maximum efficiency when its position is at right angles to the broadcasting source. It is important, therefore, once the station is tuned in, to rotate the cabinet back and forth through a quarter of a circle (90 degrees), leaving it at the position where the station is received with maximum volume.

MODEL 653
Chassis 120080B

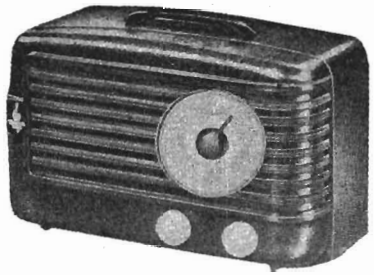

MODEL 642
Chassis 120117A

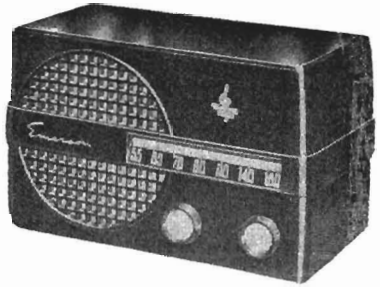

MODEL 652
Chassis 120032B

©John F. Rider

Compliments of www.nucow.com

MODELS 642, Ch. 120117A; 652, Ch. 120032B; 653, Ch. 120080B

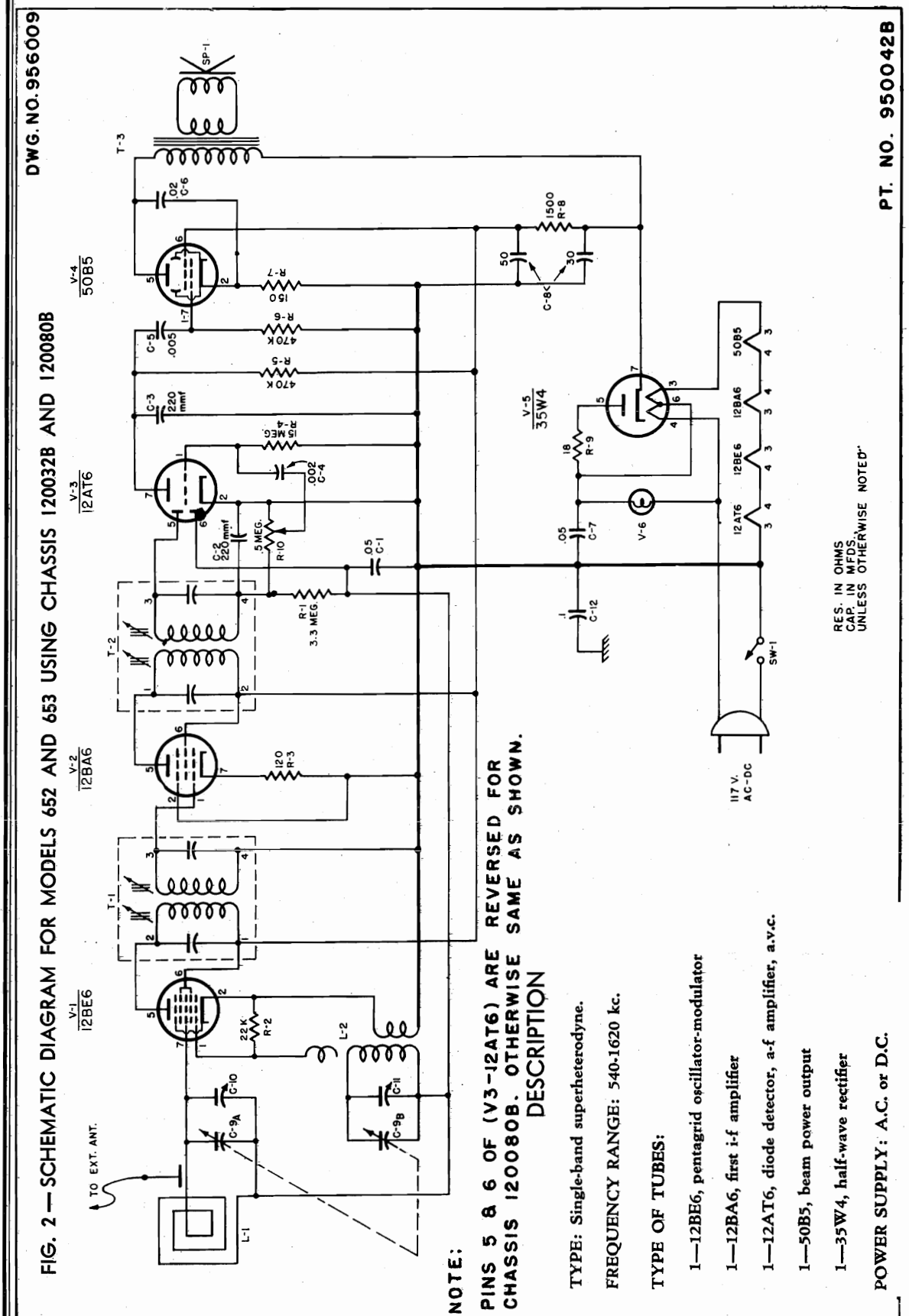

FIG. 2 — SCHEMATIC DIAGRAM FOR MODELS 652 AND 653 USING CHASSIS 120032B AND 120080B

NOTE:

PINS 5 & 6 OF (V3-12AT6) ARE REVERSED FOR CHASSIS 120080B. OTHERWISE SAME AS SHOWN.

DESCRIPTION

TYPE: Single-band superheterodyne.

FREQUENCY RANGE: 540-1620 kc.

TYPE OF TUBES:

1—12BE6, pentagrid oscillator-modulator

1—12BA6, first i-f amplifier

1—12AT6, diode detector, a-f amplifier, a.v.c.

1—50B5, beam power output

1—35W4, half-wave rectifier

POWER SUPPLY: A.C. or D.C.

VOLTAGE RATING: 105-125 volts.

POWER CONSUMPTION: 30 watts.

CURRENT DRAIN: 0.24 amp. at 117 volts a.c.

©John F. Rider

Compliments of www.nucow.com

MODELS 642, Ch. 120117A; 652, Ch. 120032B; 653, Ch. 120080B

CABINET AND DIAL PARTS LIST

DESCRIPTION	†PART NUMBER						
	Model 642			Model 652			Model 653
Cabinet (Bakelite)	140326			140346—Ebony 140353—Ivory			140345
Knobs	460151			460162S			460162S
Baffle and Grill Cloth	——			470609			470608
Back	575059			——			——
Baffle	——			575646			——
Handle (Black)	450000			——			——
Crystal	520034			——			——
Drive Pulley	531009			Pt. of 900072			Pt. of 900071
Drive Shaft	280024			280127			280126
Spring (Drive Cord)	587000			587040			587040
Dial Support Bracket (Right)	——			410907			——
Dial Support Bracket (Left)	——			410908			——
Dial Back Plate	520113			410909			410904
Pointer	525048			525054			525022-2
Loop and Back	——			700023 FH			700051
Loop	700033			——			——
Clip (Pointer)	541169			——			——
Bracket (Loop)	412481			410123			412481

†When Ordering Always Specify Part No.
*Prices Subject to Change Without Notice.

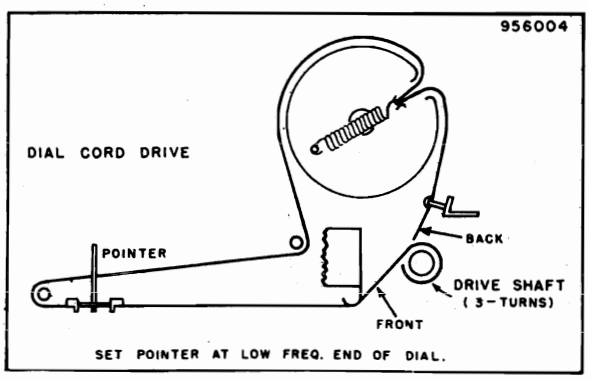

FIG. 5 — DIAL CORD DRIVE FOR CHASSIS 120080B

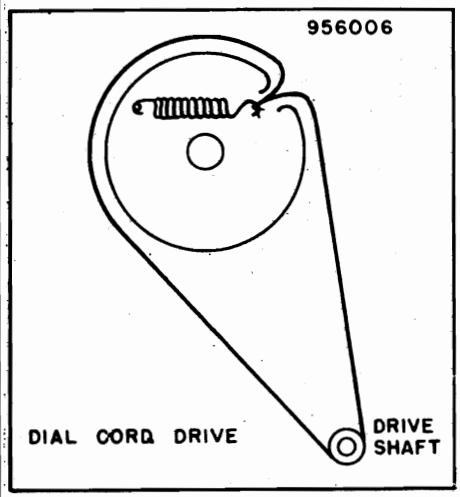

DIAL CORD DRIVE
FIG. 3 — FOR CHASSIS 120017B

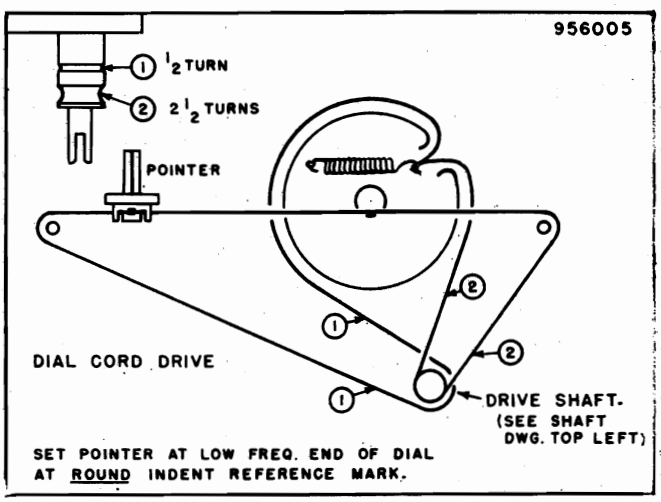

DIAL CORD DRIVE
FIG. 4 — FOR CHASSIS 120032B

©John F. Rider

Compliments of www.nucow.com

MODELS 642, Ch. 120117A; 652, Ch. 120032B; 653, Ch. 120080B

ALIGNMENT

To set pointer, turn variable condenser fully closed and set pointer at mark near left end of dial backplate. Use isolation transformer if available. If not, connect a 0.1 mfd. condenser in series with low side of signal generator and chassis. Volume control should be at maximum position; output of signal generator should be no higher than necessary to obtain an output reading. Use an insulated alignment screwdriver for adjusting.

	DUMMY ANTENNA	SIGNAL GENERATOR COUPLING	SIGNAL GENERATOR FREQUENCY	RADIO DIAL SETTING	METER OUTPUT	ADJUST	REMARKS
1	0.1 mfd.	High side to stator of rear section of tuning condenser. Low side to chassis.	455 kc	Variable condenser fully open.	Across voice coil.	A1, A2, A3, A4	Adjust for maximum output. If isolation transformer is not used, reduce dummy antenna to 0.001 mfd. to reduce hum modulation.
2	200 mmfd.	High side to external antenna lead. Low side to external ground lead.	1620 kc	Variable condenser fully open.	Across voice coil.	A5	Adjust for maximum output.
3	200 mmfd.	High side to external antenna lead. Low side to external ground lead.	1400 kc	Tune for maximum output.	Across voice coil.	A6	Adjust for maximum output.

VOLTAGE READINGS FOR CHASSIS 120117A

Symbol	TUBE	PIN 1	PIN 2	PIN 3	PIN 4	PIN 5	PIN 6	PIN 7
V1	12BE6	—5.3 DC	0	11.2 AC	25 AC	90 DC	85 DC	—.45 DC
V2	12BA6	—.45 DC	0	25 AC	38 AC	90 DC	87 DC	1. DC
V3	12AT6	—0.6 DC	0	0	12 AC	—0.45 DC	—0.45 DC	45 DC
V4	50B5	0	5.5 DC	38 AC	85 AC	110 DC	85 DC	0
V5	35W4	0	0	85 AC	117 AC	110 AC	112 AC	120 DC

RESISTANCE READINGS FOR CHASSIS 120117A

Symbol	TUBE	PIN 1	PIN 2	PIN 3	PIN 4	PIN 5	PIN 6	PIN 7
V1	12BE6	2400	0.6	18	32	300,000	300,000	3 meg.
V2	12BA6	3 meg.	0	32	48	300,000	300,000	120
V3	12AT6	15 meg.	0	0	18	3 meg.	500,000	500,000
V4	50B5	400,000	150	48	80	300,000	300,000	400,000
V5	35W4	0	0	80	100	110	100	300,000

VOLTAGE READINGS FOR CHASSIS 120032B AND 120080B

Symbol	TUBE	PIN 1	PIN 2	PIN 3	PIN 4	PIN 5	PIN 6	PIN 7
V1	12BE6	—6.2 DC	0	24 AC	11.5 AC	85 DC	85 DC	—.05 DC
V2	12BA6	0	0	24 AC	37 AC	85 DC	85 DC	1.4 DC
V3	12AT6	—.4 DC	0	0	11.5 AC	*—.02 DC	*—.05 DC	50 DC
V4	50B5	0	5 DC	86 AC	37 AC	115 DC	85 DC	0
V5	35W4	0	0	86 AC	117 AC	110 AC	112 AC	120 DC

*12AT6, Pin 5 is —.05 in Chassis 120080B 12AT6, Pin 6 is —.02 in Chassis 120080B

RESISTANCE READINGS FOR CHASSIS 120032B AND 120080B

Symbol	TUBE	PIN 1	Pin 2	Pin 3	PIN 4	PIN 5	PIN 6	PIN 7
V1	12BE6	2400	0.6	25	13	300,000	300,000	3 meg.
V2	12BA6	20	0	25	38	300,000	300,000	120
V3	12AT6	15	0	0	13	*500,000	*3.5	700,000
V4	50B5	400,000	150	75	38	300,000	300,000	400,000
V5	35W4	Inf.	Inf.	75	100	110	95	300,000

*12AT6, Pin 5 is 3.5 in Chassis 120080B 12AT6, Pin 6 is 500,000 in Chassis 120080B

VOLTAGE AND RESISTANCE READING INSTRUCTIONS

1. Voltage readings are in volts and resistance readings in ohms unless otherwise specified.
2. D-C voltage measurements are at 20,000 ohms per volt; a-c voltage measured at 1,000 ohms per volt.
3. Socket connections are shown as bottom views.
4. Measured values are from socket pin to common negative.
5. Line voltage maintained at 117 volts for voltage readings.
6. Nominal tolerance on component values makes possible a variation of ± 15% in voltage and resistance readings.
7. Volume control at maximum, no signal applied for voltage measurements.

©John F. Rider

Compliments of www.nucow.com

MODELS 642, Ch. 120117A; 652, Ch. 120032B; 653, Ch. 120080B

REPLACEMENT PARTS LIST FOR CHASSIS 120117A

Schematic Symbol	†Part No. Model 642 Chassis 120117A	DESCRIPTION	Schematic Symbol	†Part No. Model 642 Chassis 120117A	DESCRIPTION
R1, 4	351490	Resistor—15 meg., ½ w., 20%	T1, T2	720021	1st and 2nd I. F. transformer
R2	Part of 716051	Resistor—22,000 ohms, ½ w., ±10%			
R3	340270	Resistor—120 ohm, ½ w., ±10%	T3	734057	Output transformer
R5, 6	351130	Resistor—470 k ohm, ½ w., ±20%			
R7	340290	Resistor—150 ohm, ½ w., ±10%	L2	716051	Oscillator coil
R8	380530	Resistor—1500 ohm, 1 w., ±20%			
R9	340070	Resistor—18 ohm, ½ w., ±10%			
R10	390015	Volume control	V1	800525	12BE6—Converter
R11	351330	Resistor——3.3 meg., ½ w., 20%	V2	800524	12BA6—I. F. amplifier
			V3	800523	12AT6—Detector—A. V. C. and A. F. amplifier
C1	920060	Capacitor—paper—.05 mfd., 200 v.	V4	800527	50B5—Audio output
C2, 3, 4, 5	470310	Capacitor assembly	V5	800526	35W4—Rectifier
C6	920020	Capacitor—.02 mfd., 400 v.	V6	807000	Pilot light
C7	920030	Capacitor—.05 mfd., 400 v.		530050	Drive cord (12") approx.
C8	925000	Capacitor—electrolytic—30-50 mfd., 150 v.		583029	Line Cord
				507090	Dial light socket
C9A, C9B	900052	Variable capacitor		180045	Speaker

†When Ordering Always Specify Part No.

REPLACEMENT PARTS LIST FOR CHASSIS 120032B AND 120080B

Schematic Symbol	†Part No. Model 652 Chassis 120032B	†Part No. Model 653 Chassis 120080B	DESCRIPTION
R1	351330	351330	Resistor—3.3 meg., ½ w., ±20%
R2	Part of L2	Part of L2	Resistor—22,000 ohms, ½ w., 10%
R3	340270	340270	Resistor—120 ohms, ½ w., ±10%
R4	351490	351490	Resistor—15 meg., ½ w., 20%
R5, 6	351130	351130	Resistor—470 k ohm, ½ w., ±20%
R7	340290	340290	Resistor—150 ohm, ½ w., ±10%
R8	380530	380530	Resistor—1500 ohm, 1 w., ±20%
R9	340070	340070	Resistor—18 ohm, ½ w., ±10%
R10	390146	390145	.5 meg volume control
C1	920060	920040	.05 mfd., 200 v.
C2	910000		220 mmf., mica, type "O"
C3	910000		220 mmf., mica, type "O"
C4	920515		.002 mfd., 400 v., paper
C5	920180		.005 mfd., 400 v., paper
C2, 3, 4, 5	470310	470310	Herlac coupling assembly
C6	920020	920540	.02 mfd., 400 v., paper
C7	920030	920539	.05 mfd., 400 v., paper
C8	925175	925000	30-50 mfd., 150 v., electrolytic
C-9A, B	900072	900071	Variable capacitor
C10, 11	Pt. of C9A, B	Pt. of C9A, B	Trimmers
C12	920040	920040	.1 mfd., 200 v.
T1, T2	720021	720021	1st and 2nd I. F. transformer
T3		734057	Output transformer
L1	700023FH	700051	Ant. loop and back
L2	716026-1	716026-2	Oscillator coil
SP-1	180071	180045	Speaker
SW-1	Pt. of R10	Pt. of R10	On-off switch
V1	800525	800525	12BE6—Mixer
V2	800524	800524	12BA6—I. F. amplifier
V3	800523	800523	12AT6—Detector—1st A. F. amplifier
V4	800527	800527	50B5—Audio output
V5	800526	800526	35W4—Rectifier
V6	807000	807000	Pilot light—15 amp., #47
		530002	Drive cord (30") approx.
	530002		Drive cord (27") approx.
	507005	507220	Dial light socket
	583030	583032	Line cord

©John F. Rider

Compliments of www.nucow.com

MODEL 645,
Ch. 120115

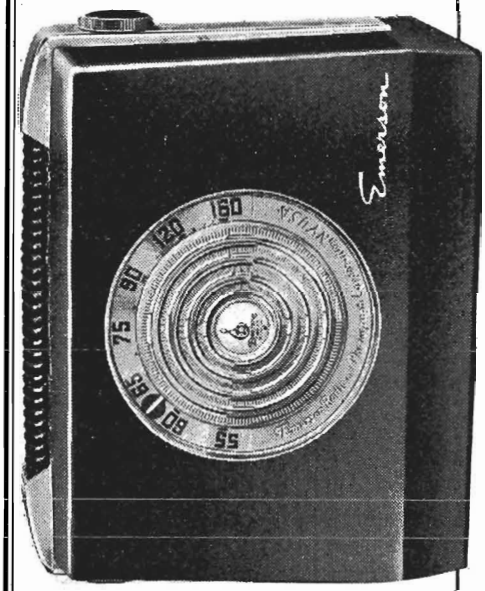

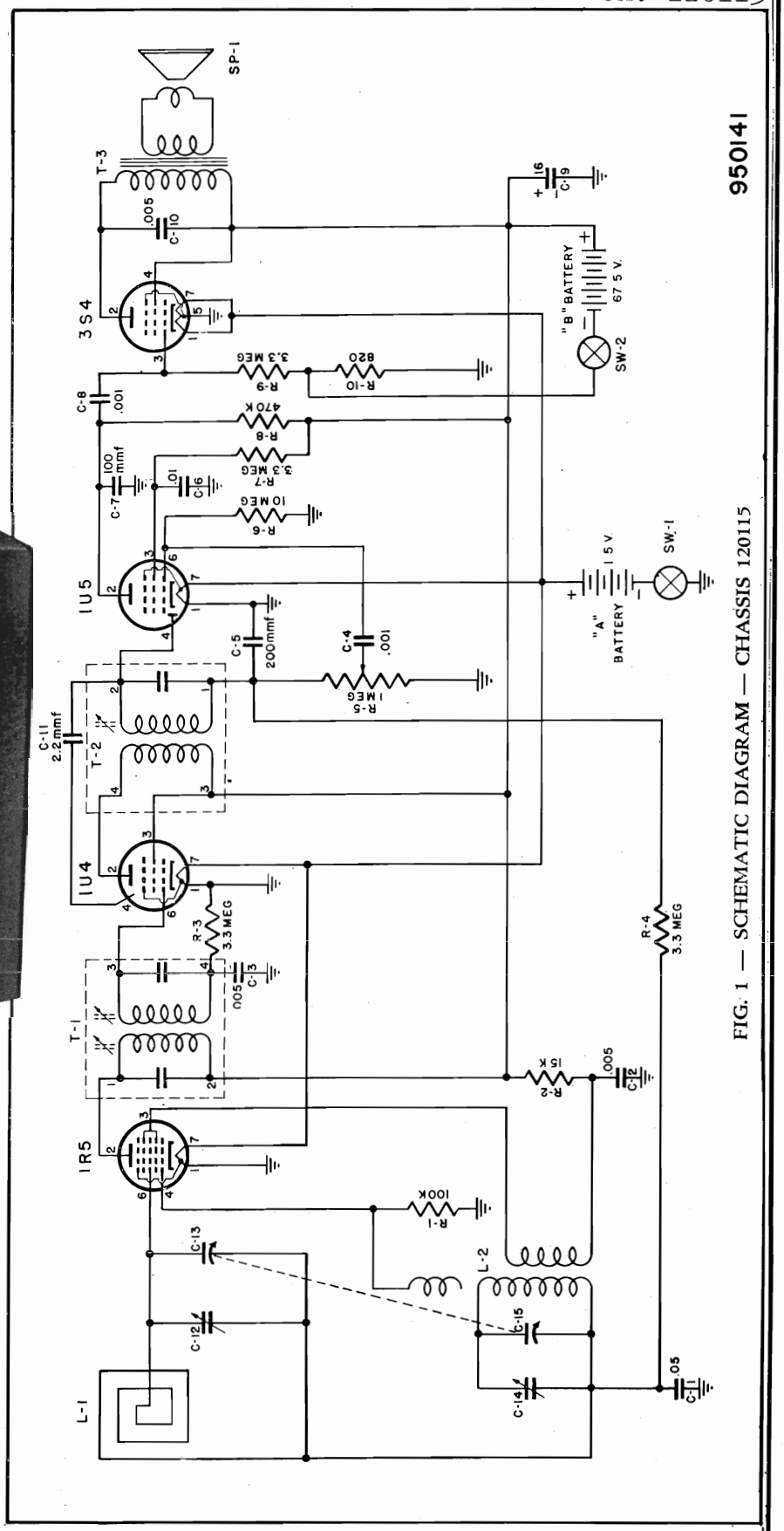

FIG. 1 — SCHEMATIC DIAGRAM — CHASSIS 120115

©John F. Rider

Compliments of www.nucow.com

MODEL 645,
Ch. 120115

DESCRIPTION

TYPE: Battery operated portable superheterodyne.

FREQUENCY RANGE: 540-1620 KC.

TYPE OF TUBES:

1—1R5, pentagrid converter
1—1U4, i-f amplifier
1—1U5, detector, a.v.c., a-f amplifier
1—3S4, power output

POWER SUPPLY: "A" and "B" batteries

VOLTAGE RATING:

Battery operation—1½ volts "A" supply
67½ volts "B" supply

CURRENT CONSUMPTION:

"A" battery—.250 amp.
"B" battery—.009 amp.

GENERAL NOTES

1. Battery Complement: Replace "A" battery with Eveready 1½ volt No. 720 or equivalent. Replace "B" battery with 67½ volt Eveready No. 467 or equivalent.

2. The color coding of the battery is as follows:

Red— B+	Yellow— A+
White— B—	Black— A—

3. If replacements are made in the r-f section of the circuit, carefully realign the receiver.

4. The receiver has a self-contained antenna and normally does not require an additional antenna connection. For installations in a location where reception is weak, connect an outside antenna to the colored lead at the rear of the cabinet. Do not use a ground connection.

5. The self-contained loop antenna has directional properties. After a station is tuned in, it is important that the set be rotated through a quarter turn to obtain the position which results in the greatest volume.

REPLACEMENT PARTS LIST

SYMBOL	†Part No.	DESCRIPTION	SYMBOL	†Part No.	DESCRIPTION
C-1	920060	.05 mfd., 200 v., paper	R-3	351330	3.3 megohms, ½ w., ± 20%
C-2	920180	.005 mfd., 400 v., paper	R-4	351330	3.3 megohms, ½ w., ± 20%
C-3	920180	.005 mfd., 400 v., paper	R-5	390066	1 megohm, Volume control
C-4	Pt. of 928034	.001 mfd., +100 —0%	R-6	351450	10 megohm, ½ w., ± 20%
C-5	Pt. of 928034	200 mmf., ± 50%	R-7	351330	3.3 megohms, ½ w., ± 20%
C-6	Pt. of 928034	.01 mfd., +200 —20%	R-8	351130	470,000 ohms, ½ w., ± 20%
C-7	Pt. of 928034	100 mmf., +100 —0%	R-9	351330	3.3 megohms, ½ w., ± 20%
C-8	Pt. of 928034	.001 mfd., +100 —0%	R-10	340470	820 ohms, ½ w., ± 10%
C-9	925066	16 mfd., 100 v., electrolytic	SP-1	180068	Speaker
C-10	920180	.005 mfd., 400 v., paper	SW-1	Pt. of 390066	On-off switch
C-11	915005	2.2 mfd., 400 v., ceramic	SW-2	Pt. of 390066	On-off switch
C-12	Pt. of 900057 or of 900047	R.f. trimmer	T-1	720062	1st i.f. transformer
C-13	Pt. of 900057 or of 900047	Variable cap.—R.f. section	T-2	720066A	2nd i.f. transformer
C-14	Pt. of 900057 or of 900047	Osc. trimmer	T-3	734053	Output transformer
C-15	Pt. of 900057 or of 900047	Variable cap.—Osc. section	V-1	1R5	Converter
L-1 or	700044	Loop ant.—Use with pt. 900057	V-2	1U4	I-F amplifier
L-1	700041	Loop ant.—Use with pt. 900047	V-3	1U5	Detector, a.v.c., a-f amplifier
L-2	716048A	Oscillator coil	V-4	354	Power output
R-1	350970	100,000 ohms, ½ w., ± 20%	——	——	1½ volt "A" battery, Eveready No. 720
R-2	340770	15,000 ohms, ½ w., ± 10%	——	——	67½ volt "B" battery, Eveready No. 467

†Specify part numbers when ordering.

CABINET AND DIAL PARTS

†Part No.	DESCRIPTION	†Part No.	DESCRIPTION
140236	Cabinet	530002	Drive cord (28")
140237	Cabinet back	587023	Drive cord spring
460091	Knob	410514	Dial backplate
520096	Dial and grille	525043	Pointer
460123	Handle	280084	Pointer shaft
280083	Drive shaft	531319	Pointer pulley

©John F. Rider

Compliments of www.nucow.com

MODEL 645,
Ch. 120115

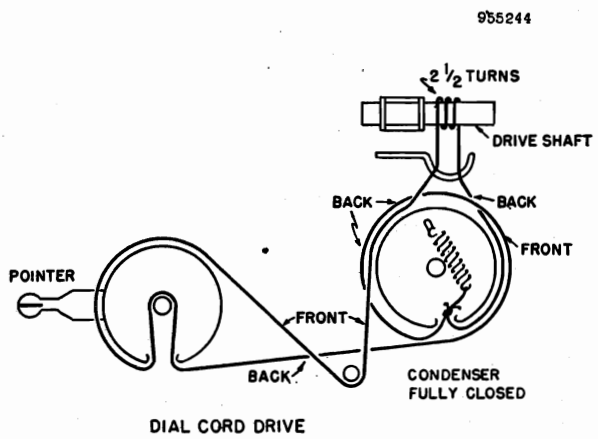

FIG. 2 — DIAL CORD STRINGING

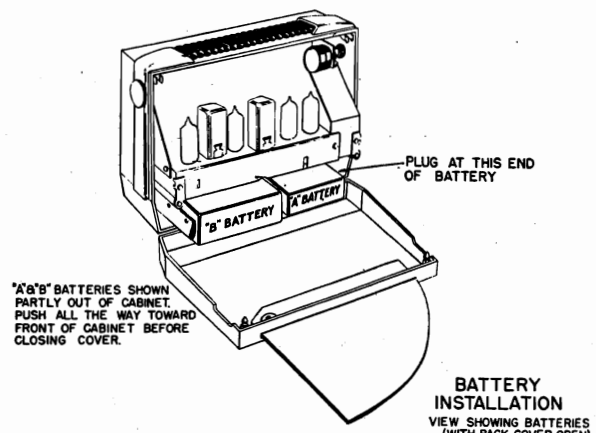

FIG. 3 — BATTERY INSTALLATION

ALIGNMENT PROCEDURE

1. To position pointer, turn variable condenser fully closed and set pointer to reference mark near low-frequency end of dial.
2. Set the volume control at maximum. The output of the signal generator should be no higher than that necessary to obtain an output reading. Attenuate the signal input as alignment proceeds. Use an insulated alignment tool.
3. Maintain the loop in the same position relative to the chassis as when the receiver is in the cabinet.
4. Oscillator and antenna trimmers, and oscillator slugs are reached from bottom of chassis.

	DUMMY ANTENNA	SIGNAL GENERATOR COUPLING	SIGNAL GENERATOR FREQUENCY	RADIO DIAL SETTING	OUTPUT METER	ADJUST	REMARKS
1	0.1 mfd.	High side to grid (pin 6) of V1 (1R5). Low side to chassis.	455 KC.	Variable condenser fully open.	Across voice coil.	Primary and secondary of T2 and T1.	Adjust for maximum output.
2	200 mmf.	High side to external antenna lead. Low side to chassis.	540 KC.	Variable condenser fully closed.	Across voice coil.	Oscillator slug in L-2.	Adjust for maximum output.
3	200 mmf.	"	1620 KC.	Variable condenser fully open.	Across voice coil.	Oscillator trimmer C-14.	Adjust for maximum output.
4	200 mmf.	"	1400 KC.	Tune for maximum output.	Across voice coil.	Antenna trimmer C-12.	Adjust for maximum output.

CONDITIONS FOR VOLTAGE AND RESISTANCE READINGS

1. Voltage readings are + dc. volts, resistance readings are ohms unless otherwise noted.
2. All measurements made with voltohmyst or equivalent.
3. Socket connections are shown as bottom views, with valves measured from socket pin to chassis.
4. No signal applied for voltage measurements.
5. Nominal tolerance on component valves makes possible a variation of ± 15% in readings.
6. On the voltage and resistance diagram, readings above line are voltage, valves below line indicate resistance. K= kilohms, MEG=megohms.
7. Valves marked * measured to pin 4 of V-4 (B+).

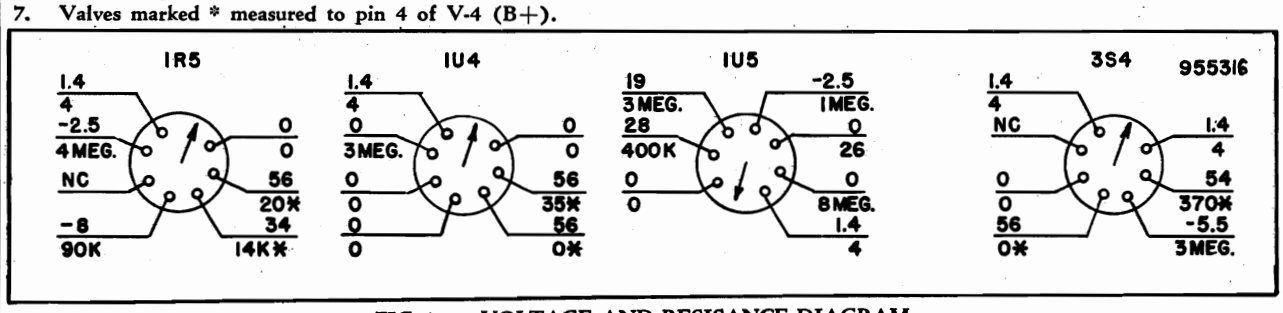

FIG 4. — VOLTAGE AND RESISANCE DIAGRAM

©John F. Rider

Compliments of www.nucow.com

MODELS 646A, Ch. 120121A;
646B, Ch. 120121B

MODEL 646A, 646B
CHASSIS 120121A, 120121B

DESCRIPTION

TYPE: Three way (battery, a.c., d.c.) portable superheterodyne

FREQUENCY RANGE: 540-1620 kc.

TYPE TUBES:
1—1R5, converter
1—1U4, i-f amplifier
1—1U5, detector, a.v.c., a-f amplifier
1—3V4, power output
1—117Z3, rectifier

POWER SUPPLY: "A" and "B" batteries, or a.c., or d.c.

VOLTAGE RATING:
Line operation—115 volts, a.c. or d.c.
Battery operation—"A" battery—4.5 volts
"B" battery—90 volts

POWER CONSUMPTION: 20 watts (line operation).

CURRENT DRAIN: "A" battery—.105 amp. at 4.5 volts
"B" battery—.012 amp. at 90.0 volts

Line operation—.170 amp. at 117 volts a.c.

GENERAL NOTES

1. Line Operation: Open the rear cover which is held closed by the catch studs. Remove the line cord plug from its receptacle at the rear of the chassis. Remove the line cord and insert the plug into a suitable outlet. When the power supply is d.c. and the receiver remains inoperative, remove the plug, turn it half-way around and reinsert in the outlet to obtain proper polarity.

2. Battery Operation: Remove the line plug from the outlet and insert in the receptacle at the rear of the chassis. The receiver will not operate from batteries if the plug is out of the chassis receptacle. Coil the loose portion of the line cord and store it carefully alongside the "A" battery underneath the chassis. (See Fig. 5)

3. The color coding of the battery cables is as follows:

Red— A+	Yellow— A+
White— B−	Black— A−

4. If replacements are made in the r-f section of the circuit, carefully realign the receiver.

5. The receiver has a self contained antenna and normally does not require an additional antenna connection. For installations in a location where reception is weak, connect an outside antenna to the colored lead at the rear of the cabinet. Do not use a ground connection.

6. The self-contained loop antenna has directional properties. After a station is tuned in, it is important that the set be rotated through a quarter turn to obtain the position which results in the greatest volume.

©John F. Rider

Compliments of www.nucow.com

MODELS 646A, Ch. 120121A;
646B, Ch. 120121B

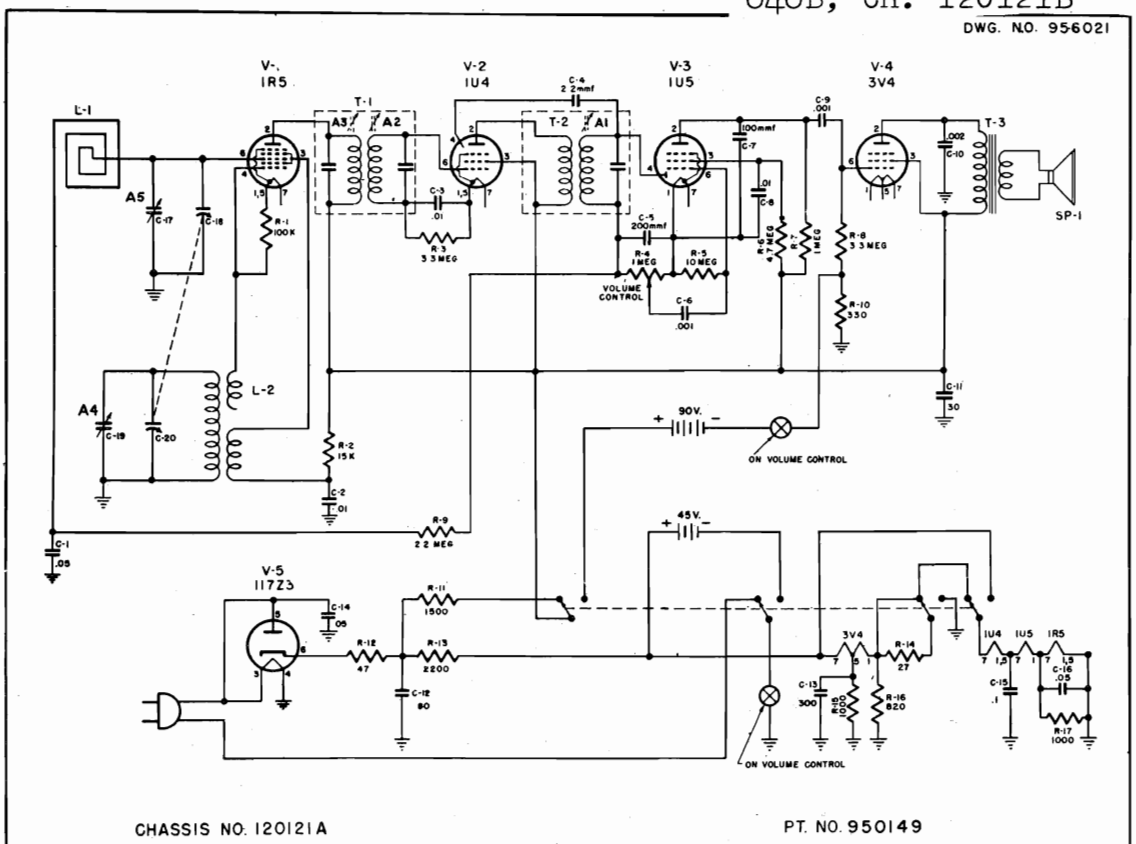

Figure 1—Schematic Circuit Diagram—Chassis 120121-A

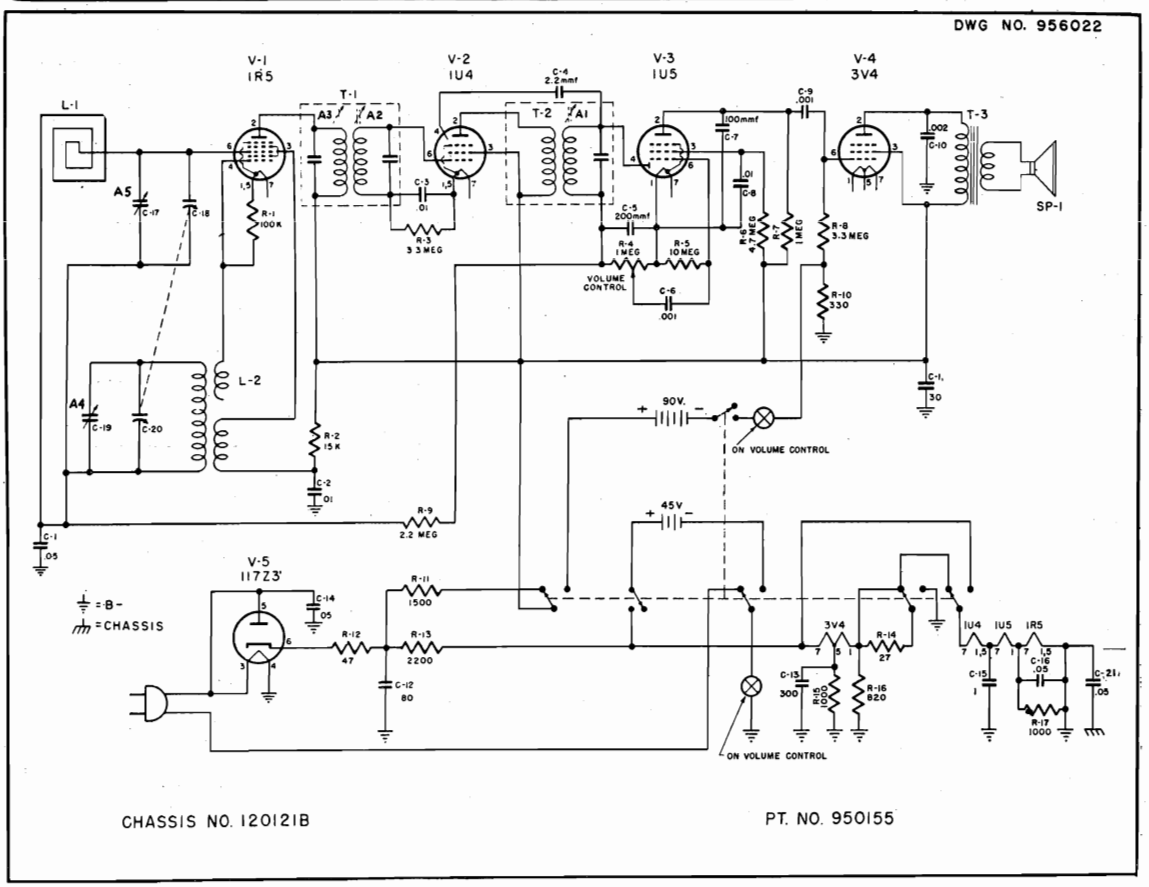

Figure 2—Schematic Circuit Diagram—Chassis 120121-B

©John F. Rider

Compliments of www.nucow.com

MODELS 646A, Ch. 120121A;
646B, Ch. 120121B

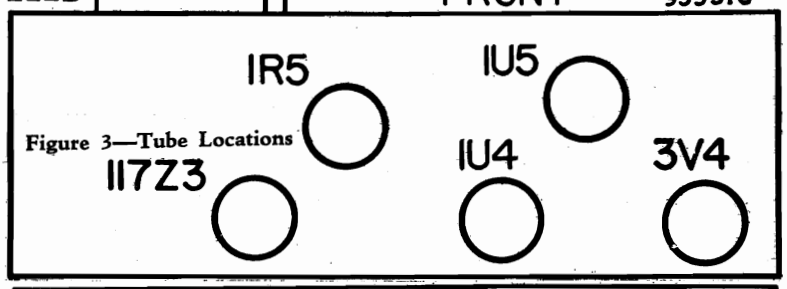

Figure 3—Tube Locations

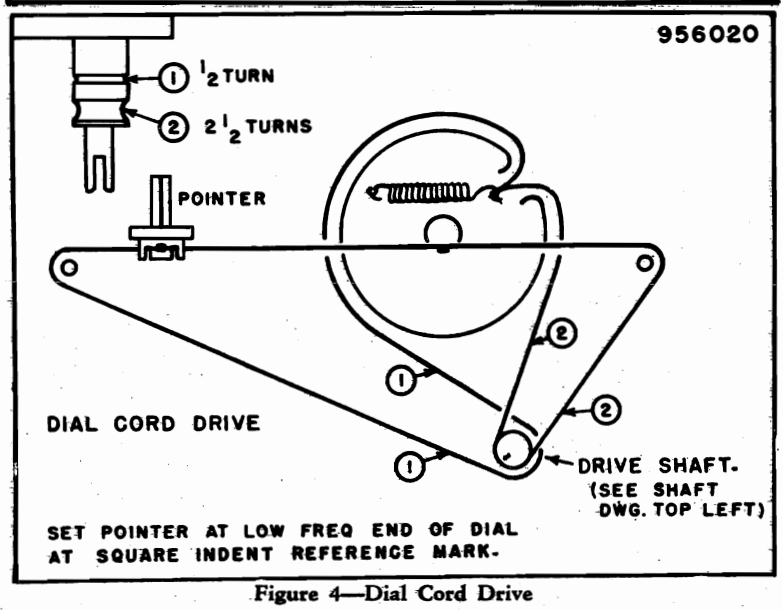

Figure 4—Dial Cord Drive

BATTERY REPLACEMENT TABLE

MODEL	CHASSIS	"A" BATTERY	"B" BATTERY
646A 646B	120121A 120121B	4½ volt. Eveready No. 726 or equivalent. (See Fig. 5)	90 volt. Eveready No. 490 Minimax or equivalent. (See Fig. 5)

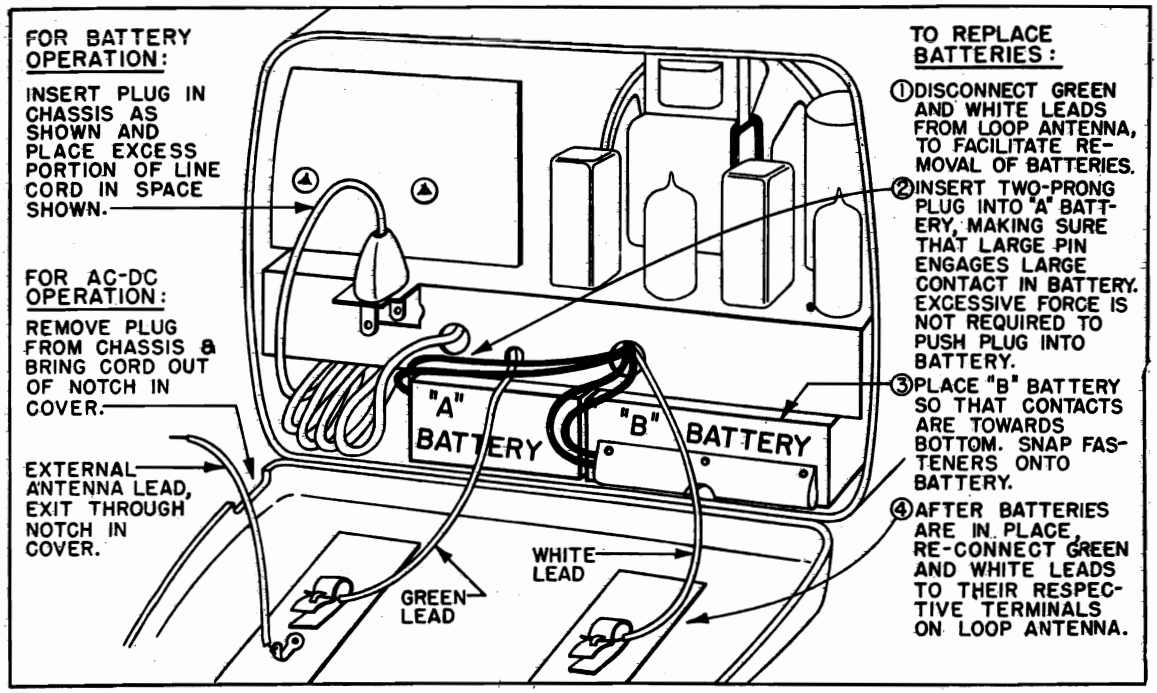

Figure 5—Battery Installation

955317

©John F. Rider

Compliments of www.nucow.com

MODELS 646A, Ch. 120121A;
646B, Ch. 120121B

INSTRUCTIONS FOR VOLTAGE AND RESISTANCE READINGS

1. Voltage and resistance readings are measured for 117 volt a.c. line operation.
2. Socket connections are shown as bottom views. Measurements are taken from socket pin to chassis.
3. Voltage readings are in d.c. volts and resistance readings in ohms, unless otherwise specified.
4. All meaurements made with voltohmyst.
5. For voltage measurements, set volume control at maximum; no signal applied.
6. Nominal tolerance on component values makes possible a variation of ± 15% in voltage and resistance readings.

VOLTAGE READINGS

CHASSIS	SYMBOL	TUBE TYPE	PIN 1	PIN 2	PIN 3	PIN 4	PIN 5	PIN 6	PIN 7
120121A	V1	1R5	0	95	60	−6.2	0	0	1.3
120121B	V2	1U4	2.8	95	95	0	2.8	.05	4.0
	V3	1U5	1.3	16	15	.05	.01	.01	2.5
	V4	3V4	4	95	95	0	5.2	0	6.5
	V5	117Z3	N.C.	115	115 AC	0	115 AC	116	115

RESISTANCE READINGS

CHASSIS	SYMBOL	TUBE TYPE	PIN 1	PIN 2	PIN 3	PIN 4	PIN 5	PIN 6	PIN 7
120121A	V1	1R5	0	3800	20K	100K	0	3 Meg.	17
120121B	V2	1U4	30	3800	3800	Inf.	34	3.3 Meg.	38
	V3	1U5	17	1 Meg.	3 Meg.	1 Meg.	3 Meg.	10 Meg.	30
	V4	3V4	38	4000	3800	330	42	3.3 Meg.	54
	V5	117Z3	N.C.	2000	480	0	480	2000	2000

NC=no connection; Inf.=infinity; K=kilohms; Meg.=megohms

ALIGNMENT PROCEDURE

1. Use battery power when available. When a.c. power is used, connect the line cord through an isolation transformer if available. Otherwise connect a 0.1 mfd. condenser in series with the low side of the signal generator and B—.
2. Set the volume control at maximum. The output of the signal generator should be no higher than that necessary to obtain an output reading. Attenuate the signal input as alignment proceeds. Use an insulated alignment tool.
3. Maintain the loop in the same position relative to the chassis as when the receiver is in the cabinet.

	DUMMY ANTENNA	SIGNAL GENERATOR COUPLING	SIGNAL GENERATOR FREQUENCY	RADIO DIAL SETTING	OUTPUT METER	ADJUST*	REMARKS
1	0.1 mfd.	High side to pin 6 (grid) of V1 (1R5). Low side to chassis	455 kc	Variable condenser fully open.	Across voice coil.	A1, (2nd i-f trans), A2, A3 (1st i-f trans.)	Adjust for maximum output. If a.c. is used without an isolation transformer, reduce dummy antenna to 200 mmf. to reduce hum modulation.
2	200 mmf.	High side to external ant. lead. Low side to chassis	1620 kc	Variable condenser fully open.	Across voice coil.	A4 (trimmer cond. C4.)	Adjust for maximum output.
3	200 mmf.	"	1400 kc	Tune for maximum output.	Across voice coil.	A5 (trimmer cond. C2.)	Adjust for maximum output.

©John F. Rider

Compliments of www.nucow.com

MODEL 646A,
Ch. 120121A

CHASSIS PARTS LIST—(CHASSIS 120121-A)

Symbol	Part No.	DESCRIPTION
R-1	Pt. of 716017-1	100,000 ohm, ½ w., ± 20%
R-2	340770	15,000 ohm, ½ w., ±10%
R-3	351330	3.3 meg., ½ w., ±20%
R-4	390051-1	1 meg., volume control
R-5	351450	10 meg., ½ w., ±20%
R-6	351370	4.7 meg., ½ w., ±20%
R-7	341210	1 meg., ½ w., ±10%
R-8	351330	3.3 meg., ½ w., ±20%
R-9	351290	2.2 meg., ½ w., ±20%
R-10	340370	330 ohm, ½ w., ±10%
R-11	340530	1,500 ohm, ½ w., ±10%
R-12	370170	47 ohm, 1 w., ±10%
R-13	394095	2,200 ohm, 10 w.
R-14	340110	27 ohm, ½ w., ±10%
R-15	340490	1,000 ohm, ½ w., ±10%
R-16	340470	820 ohm, ½ w., ±10%
R-17	340490	1,000 ohm, ½ w., ±10%
C-1	920060	.05, mfd., 200v.
C-2	920092	.01 mfd., 200v.
C-3	920092	.01 mfd., 200v.
C-4	915005	2.2 mmf.
C-5	Pt. of 928034	200 mmf., coupling plate
C-6	Pt. of 928034	.001 mfd., coupling plate
C-7	Pt. of 928034	100 mmf., coupling plate
C-8	Pt. of 928034	.01 mfd., coupling plate
C-9	Pt. of 928034	.001 mfd., coupling plate
C-10	920515	.002 mfd., 400v.
C-11	Pt. of 925167-1	30 mfd., 150v. electrolytic
C-12	Pt. of 925167-1	80 mfd., 150v. electrolytic
C-13	Pt. of 925167-1	300 mfd., 10v. electrolytic
C-14	920539	.05 mfd., 400v.
C-15	920040	.1 mfd., 200v.
C-16	920060	.05 mfd., 200v.
C-17	Pt. of 900160-1	R.F. trimmer
C-18	Pt. of 900160-1	Variable cap. — R.F. section
C-19	Pt. of 900160-1	Oscillator trimmer
C-20	Pt. of 900160-1	Variable cap. — Oscillator section
L-1	700027	Loop antenna
L-2	716017-1	Oscillator coil
T-1	720062	1st I.F. transformer
T-2	720066A	2nd I.F. transformer
T-3	734053	Output transformer
SW-1	510075	Transfer switch
SP-1	180068	Speaker
V-1	800110	1R5 tube
V-2	800017	1U4 tube
V-3	800019	1U5 tube
V-4	800018	3V4 tube
V-5	800013	117Z3 tube

CABINET PARTS LIST—(MODEL 646-A)

Part No.	DESCRIPTION
140352	Cabinet—maroon
140352-1	Cabinet back—maroon
140366	Cabinet—saddle tan
140366-A	Cabinet back—saddle tan
140364	Cabinet—green
140364-A	Cabinet back—green
140365	Cabinet—ivory
140365-A	Cabinet back—ivory
587007	Hinge spring—(for all above backs)
460162-S	Knob—black—gold center
525054	Pointer
808202	Fuse clip
541009	Tubular clip
530002	Drive cord (27")
410909	Dial back plate
583012P	Line cord
587040	Spring—drive cord
585008	Battery cable "A"
585029	Battery cable "B"

©John F. Rider

Compliments of www.nucow.com

MODEL 646B,
Ch. 120121B

CHASSIS PARTS LIST—(CHASSIS 120121-B)

Symbol	Part No.	DESCRIPTION
R-1	350970	100,000 ohm, ½ w., ± 20%
R-2	340770	15,000 ohm, ½ w., ±10%
R-3	351330	3.3 meg., ½ w., ±20%
R-4	390051-1	1 meg., volume control
R-5	351450	10 meg., ½ w., ±20%
R-6	351370	4.7 meg., ½ w., ±20%
R-7	341210	1 meg., ½ w., ±10%
R-8	351330	3.3 meg., ½ w., ±20%
R-9	351290	2.2 meg., ½ w., ±20%
R-10	340372	330 ohm, ½ w., ±10%
R-11	340532	1,500 ohm, ½ w., ±10%
R-12	370172	47 ohm, 1 w., ±10%
R-13	394095	2,200 ohm, 10 w.
R-14	340112	27 ohm, ½ w., ±10%
R-15	340492	1,000 ohm, ½ w., ±10%
R-16	340472	820 ohm, ½ w., ±10%
R-17	340492	1,000 ohm, ½ w., ±10%
C-1	920060	.05 mfd., 200v.
C-2	920092	.01 mfd., 200v.
C-3	920092	.01 mfd., 200v.
C-4	915005	2.2 mmf.
C-5	Pt. of 928034	200 mmf., coupling plate
C-6	Pt. of 928034	.001 mfd., coupling plate
C-7	Pt. of 928034	100 mmf., coupling plate
C-8	Pt. of 928034	.01 mfd., coupling plate
C-9	Pt. of 928034	.001 mfd., coupling plate
C-10	920515	.002 mfd., 400v.
C-11	Pt. of 925186	30 mfd., 150v. electrolytic
C-12	Pt. of 925186	80 mfd., 150v. electrolytic
C-13	Pt. of 925186	300 mfd., 10v. electrolytic
C-14	920539	.05 mfd., 400v.
C-15	920040	.1 mfd., 200v.
C-16	920060	.05 mfd., 200v.
C-17	Pt. of 900160-1	R.F. trimmer
C-18	Pt. of 900160-1	Variable cap. — R.F. section
C-19	Pt. of 900160-1	Oscillator trimmer
C-20	Pt. of 900160-1	Variable cap. — Oscillator section
C-21	920539	.05 mfd., 400v.
L-1	700027	Loop antenna
L-2	716057	Oscillator coil
T-1	720062	1st I.F. transformer
T-2	720066A	2nd I.F. transformer
T-3	734053B	Output transformer
SW-1	510073	Transfer switch
SP-1	180068	Speaker
V-1	800110	1R5 tube
V-2	800017	1U4 tube
V-3	800019	1U5 tube
V-4	800018	3V4 tube
V-5	800013	117Z3 tube

CABINET PARTS LIST—(MODEL 646B)

Part No.	DESCRIPTION
140352	Cabinet—maroon
140352-1	Cabinet back—maroon
140366	Cabinet—saddle tan
140366-A	Cabinet back—saddle tan
140364	Cabinet—green
140364-A	Cabinet back—green
140365	Cabinet—ivory
140365-A	Cabinet back—ivory
587007	Hinge spring (for all above backs)
460162-S	Knob—black—gold center
700027	Loop antenna
525054	Pointer
808202	Fuse clip
541009	Tubular clip
530002	Drive cord (27")
410909	Dial back plate
583018	Line cord
587040	Spring—drive cord
585008	Battery cable "A"
585029	Battery cable "B"

©John F. Rider

Compliments of www.nucow.com

MODELS 656B, 657B,
Ch. 120122B

MODEL 657B
CHASSIS 120122B

MODEL 656B
CHASSIS 120122B

DESCRIPTION

TYPE: Three way (battery, a.c., d.c.) portable superheterodyne.

FREQUENCY RANGE: 540-1620 KC.

TYPE OF TUBES:
1—IU4, tuned r-f amplifier
1—IR5, pentagrid converter
1—IU4, i-f amplifier
1—IU5, detector, a.v.c., a-f amplifier
1—3V4, power output
1—117Z3, rectifier

POWER SUPPLY: Battery powerpack, or a.c., or d.c.

VOLTAGE RATING:
Line operation—105-125 volts, a.c. or d.c.
Battery operation— 9 volts "A" supply
90 volts "B" supply

POWER CONSUMPTION: Line operation 20 watts

CURRENT CONSUMPTION:
"A" battery—.055 amp.
"B" battery—.014 amp.
117 volts a.c.—.170 amp.

GENERAL NOTES

1. Line Operation: Open the rear cover which is held closed by the catch studs. Remove the line cord plug from its receptacle at the right side of the chassis (looking from the rear). Remove the line cord and insert the plug into a suitable outlet. When the power supply is d.c. and the receiver remains inoperative, remove the plug, turn it halfway around and reinsert in the outlet to obtain proper polarity.
2. Battery Operation: Remove the line plug from the outlet and insert in the receptacle at the right side of the chassis. The receiver will not operate from batteries if the plug is out of the chassis receptacle. Coil the loose portion of the line cord and store it carefully in the compartment formed by the insulating paper.
3. Battery Complement: Replace the power pack unit with Eveready No. 753 or Rayovac No. AB994 batteries. These units supply both "A" and "B" voltages for battery operation.
4. The color coding of the battery cable is as follows:
   Red— B+, 90 volts Yellow— A+, 9 volts
   White— B— Black— A—
5. If replacements are made in the r-f section of the circuit, carefully realign the receiver.
6. The receiver has a self contained antenna and normally does not require an additional antenna connection. For installations in a location where reception is weak, connect an outside antenna to the colored lead connected to the loop at the left side of the cabinet (looking from the rear). Do not use a ground connection.
7. The self-contained loop antenna has directional properties. After a station is tuned in, it is important that the set be rotated through a quarter turn to obtain the position which results in the greatest volume.

©John F. Rider

Compliments of www.nucow.com

MODELS 656B, 657B,
Ch. 120122B

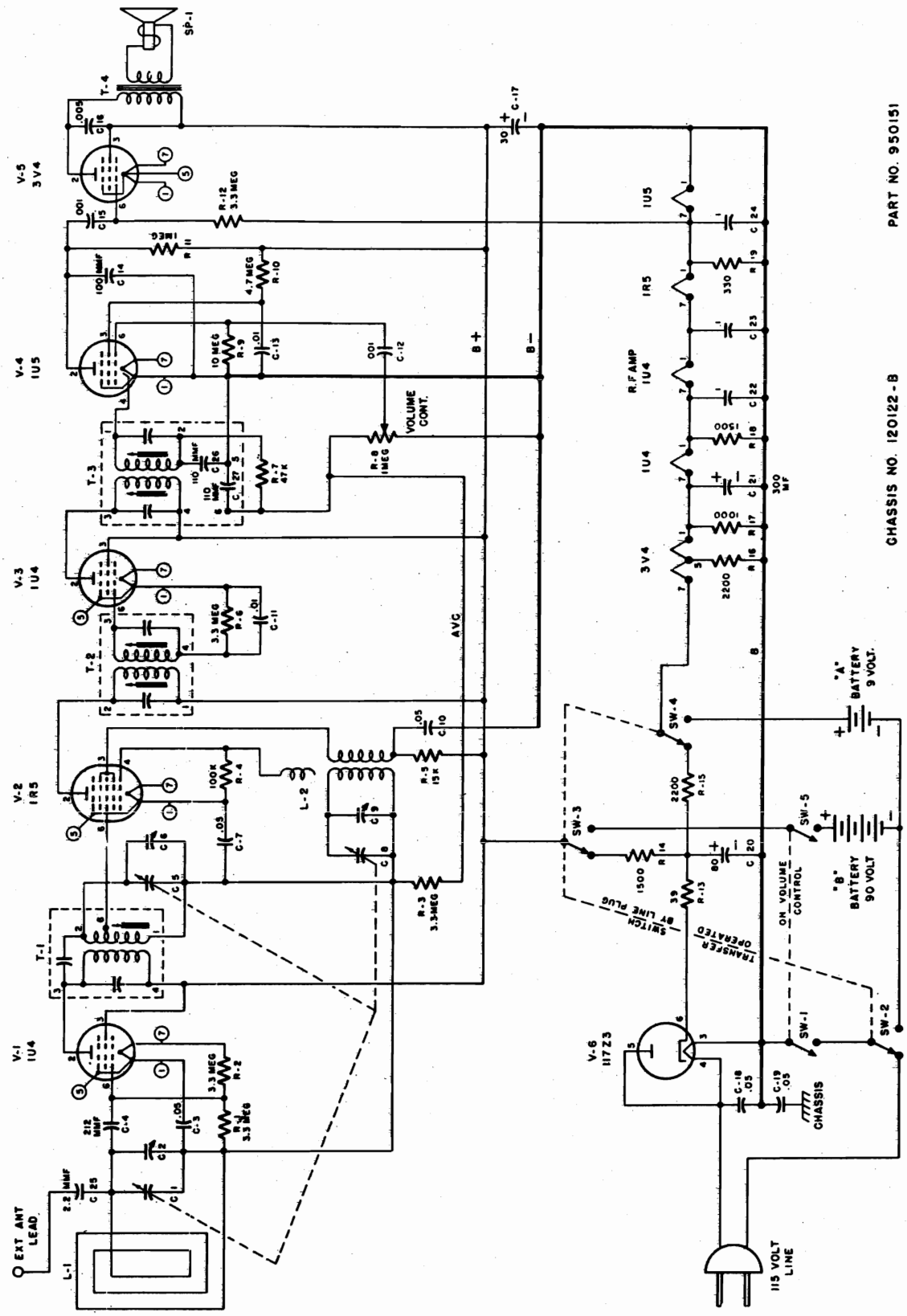

FIGURE 1 — SCHEMATIC DIAGRAM, CHASSIS 120122B

©John F. Rider

Compliments of www.nucow.com

MODELS 656B, 657B,
Ch. 120122B

ALIGNMENT PROCEDURE

1. Use battery power when available. When a.c. power is used, connect the line cord through an isolation transformer if available. Otherwise connect a 0.1 mfd. condenser in series with the low side of the signal generator and B—.

2. Set the volume control at maximum. The output of the signal generator should be no higher than that necessary to obtain an output reading. Attenuate the signal input as alignment proceeds. Use an insulated alignment tool.

3. Maintain the loop in the same position relative to the chassis as when the receiver is in the cabinet.

STEP	DUMMY ANTENNA	SIGNAL GENERATOR COUPLING	SIGNAL GENERATOR FREQUENCY	RADIO DIAL SETTING	OUTPUT METER	ADJUST	REMARKS
1	0.1 Mfd.	High side to grid (pin 6) of V2. Low side to B—.	455 KC	Variable condenser fully open	Across voice coil	T2, T3 top and bottom	Adjust for maximum output
2	Receiver Loop	Form loop of several turns and radiate signal into receiver	1620 KC	"	"	Trimmer condenser (C-9 osc.)	Bottom cover on chassis
3	"	"	1400 KC	Tunt for maximum output	"	Trimmer condenser (C-6 RF) and trimmer condenser (C-2 ant.)	"
4	"	"	600 KC	"	"	T1 top	"
5	Repeat steps 3 and 4						

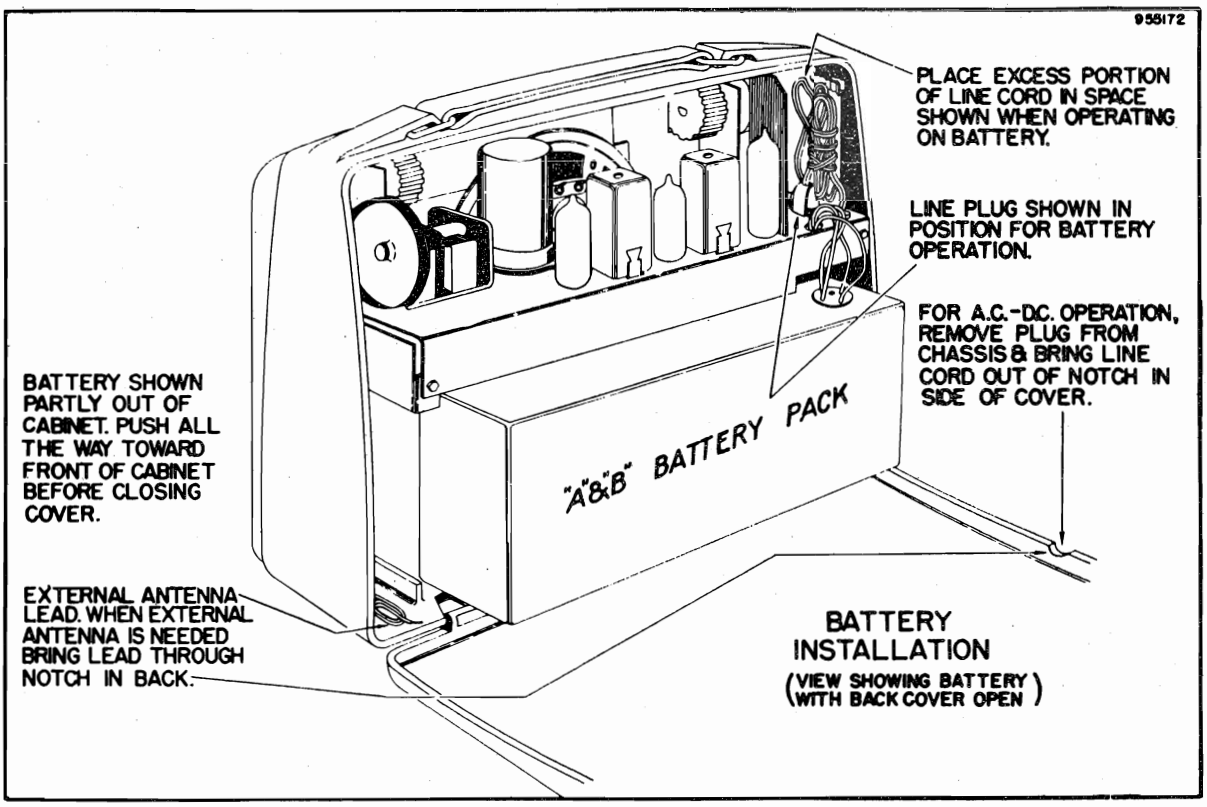

FIGURE 2 — BATTERY REPLACEMENT

©John F. Rider

Compliments of www.nucow.com

CONDITIONS FOR VOLTAGE AND RESISTANCE READINGS

1. Voltages indicated are positive d.c., resistances are in ohms, unless otherwise indicated.
2. Measurements made with voltohmyst or equivalent.
3. Line voltage maintained at 120 volts a.c. for voltage measurements.
4. Socket connections are shown as bottom views, with measurements from pin to common negative.
5. Volume control at maximum; no signal applied for voltage measurements.
6. Nominal tolerance on component values makes possible a variation of ± 15% in voltage and resistance readings.

SYMBOL	TUBE	PIN NUMBER						
		Pin 1	Pin 2	Pin 3	Pin 4	Pin 5	Pin 6	Pin 7
V1	1U4	2.8 d.c.	92 d.c.	92 d.c.	N. C.	2.8 d.c.	1.8 d.c.	4.2 d.c.
V2	1R5	1.4 d.c.	92 d.c.	60 d.c.	—.10 d.c.	1.4 d.c.	.2 d.c.	2.8 d.c.
V3	1U4	4.2 d.c.	92 d.c.	92 d.c.	N. C.	4.2 d.c.	3.1 d.c.	5.8 d.c.
V4	1U5	0	26 d.c.	21 d.c.	—.5 V d.c.	—.5 V d.c.	0	1.4 V d.c.
V5	3V4	5.7 d.c.	88 d.c.	92 d.c.	0	7 d.c.	1.2 d.c.	8.5 d.c.
V6	117Z3	N. C.	120 d.c.	0	120 a.c.	120 a.c.	120 d.c.	0

VOLTAGE READINGS (MODELS 656B, 657B)

SYMBOL	TUBE	PIN NUMBER						
		Pin 1	Pin 2	Pin 3	Pin 4	Pin 5	Pin 6	Pin 7
V1	1U4	34	4.2 K	4.2 K	N. C.	36	2.2 meg.	48
V2	1R5	18	4.2 K	20 K	100 K	18	2.6 meg.	34
V3	1U4	48	4.2 K	4.2 K	N. C.	48	3.3 meg.	60
V4	1U5	0	1 meg.	4.7 meg.	1 meg.	1 meg.	10 meg.	18
V5	3V4	62	4.6 K	4.1 K	0	74	3.3 meg.	85
V6	117Z3	N. C.	2.4 K	0	500	500	2.4 K	Inf.

RESISTANCE READINGS (MODELS 656B, 657B)

©John F. Rider
Compliments of www.nucow.com

MODELS 656B, 657B,
Ch. 120122B

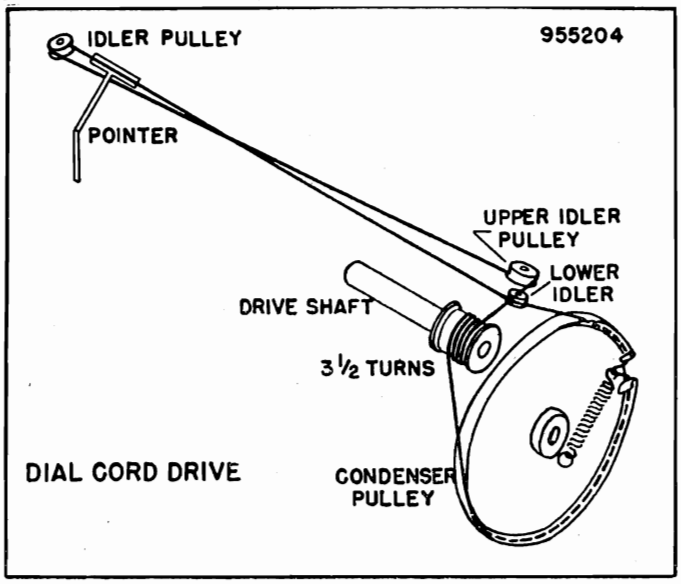

FIGURE 3 — DIAL CORD DRIVE

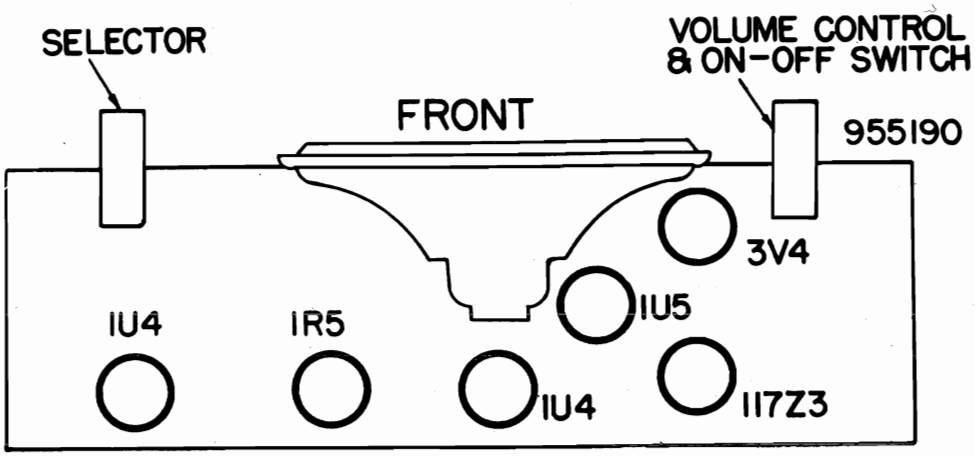

FIGURE 4 — TUBE LOCATIONS, CHASSIS 120122B

Part No. 656B	Part No. 657B	DESCRIPTION
140182-A		(Maroon) Cabinet with Grille
140183-S		Cabinet Back with Hinge (Maroon)
460082		Knobs
595006		Handle with Rings (Black)
140253-A		(Sand) Cabinet with Grille
140254		(Sand) Cabinet Back
460104		Knobs (Sand)
595007		Handle with Rings (Pigskin)
	140351	Cabinet and Back (Fabric Covered)
	460102	Grille (Sand)
	460104	Knobs (Sand)
520126	520126	Dial Crystal
808205		Fuse Clip
700042	700042	Loop Antenna
525041-1	525041-1	Pointer
180052	180052	Speaker
585033	585033	Battery Cable
583017-P	583017-P	Line Cord
530002	530002	Drive Cord
587040	587040	Spring — Drive Cord
520085	520085	Dial Back Plate

CABINET PARTS LIST (656B, 657B)

©John F. Rider

Compliments of www.nucow.com

MODELS 656B, 657B,
Ch. 120122B

CHASSIS PARTS LIST (CHASSIS 120122B)

Symbol	Part No.	DESCRIPTION			
C-1	Pt. of 900076	Variable Capacitator — Antenna Section			
C-2	Pt. of 900076	Trimmer — Antenna			
C-3	920060	.05 MF	Paper		200V
C-4	928104	212 MMF	Ceramic	±20%	300V
C-5	Pt. of 900076	Variable Capacitator — R.F. Section			
C-6	Pt. of 900076	Trimmer — R.F.			
C-7	920060	.05 MF	Paper		200V
C-8	Pt. of 900076	Variable Capacitator — Oscillator Section			
C-9	Pt. of 900076	Trimmer — Oscillator			
C-10	920060	.05 MF	Paper		200V
C-11	920092	.01 MF	Paper		200V
C-12	Pt. of 923022	.001 MF	Multiple Condenser		
C-13	Pt. of 923022	.01 MF			
C-14	Pt. of 923022	100 MMF			
C-15	Pt. of 923022	.001 MF			
C-16	920180	.005 MF	Paper		400V
C-17	Pt. of 925183	30 MF	Electrolytic		150V
C-18	920539	.05 MF	Paper		400V
C-19	920539	.05 MF	Paper		400V
C-20	Pt. of 925183	80 MF	Electrolytic		150V
C-21	Pt. of 925183	300 MF	Electrolytic		15V
C-22	920040	.1 MF	Paper		200V
C-23	920040	.1 MF	Paper		200V
C-24	920040	.1 MF	Paper		200V
C-25	Pt. of L-1	2.2 MMF			
L-1	700042	Loop Antenna			
L-2	716056	Oscillator Coil			
R-1	351330	3.3 Megohm	Carbon	½W	±20%
R-2	351330	3.3 Megohm	Carbon	½W	±20%
R-3	351330	3.3 Megohm	Carbon	½W	±20%
R-4	350970	100,000 Ohm	Carbon	½W	±20%
R-5	340770	15,000 Ohm	Carbon	½W	±10%
R-6	351330	3.3 Megohm	Carbon	½W	±20%
R-7	340890	47,000 Ohm	Carbon	½W	±10%
R-8	390063	1 Megohm	Volume Control		
R-9	351450	10 Megohm	Carbon	½W	±20%
R-10	351370	4.7 Megohm	Carbon	½W	±20%
R-11	341210	1 Megohm	Carbon	½W	±10%
R-12	351330	3.3 Megohm	Carbon	½W	±20%
R-13	370152	39 Ohm	Carbon	1W	±10%
R-14	340532	1,500 Ohm	Carbon	½W	±10%
R-15	394099	2,200 Ohm	W.W.		± 5%
R-16	340572	2,200 Ohm	Carbon	½W	±10%
R-17	340492	1,000 Ohm	Carbon	½W	±10%
R-18	340532	1,000 Ohm	Carbon	½W	±10%
R-19	340372	330 Ohm	Carbon	½W	±10%
SP-1	180052	Speaker — PM			
SW-1	Pt. of R-8	On-Off Switch			
SW-2	Pt. of 510043	Transfer Switch			
SW-3	Pt. of 510043				
SW-4	Pt. of 510043				
SW-5	Pt. of R-8	On-Off Switch			
T-1	720122	R.F. Interstage Transformer			
T-2	720121	1st I.F. Transformer			
T-3	720123	2nd I.F. Transformer			
T-4	734039A	Output Transformer			
V-1	800017	Vacuum Tube — 1U4			
V-2	800110	Vacuum Tube — 1R5			
V-3	800017	Vacuum Tube — 1U4			
V-4	800019	Vacuum Tube — 1U5			
V-5	800018	Vacuum Tube — 3V4			
V-6	800013	Vacuum Tube — 117Z3			

©John F. Rider

Compliments of www.nucow.com

MODEL 659B,
Ch. 120126-B

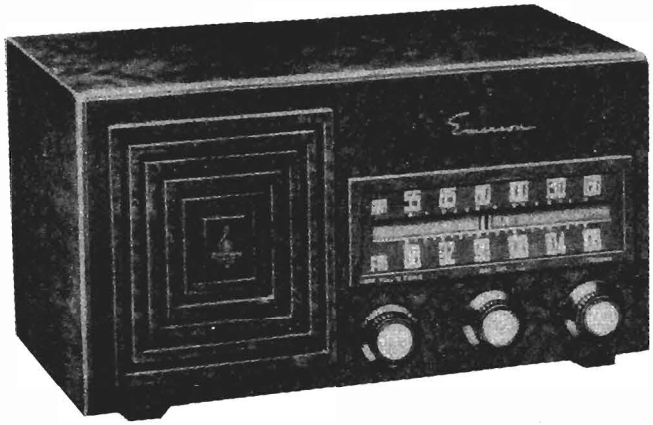

MODEL 659B
CHASSIS 120126-B

GENERAL NOTES

1. If replacements are made or the wiring disturbed in the r-f section of the circuit, the receiver should be carefully realigned.

2. A self-contained loop antenna is provided for broadcast band reception. For permanent home installation, however, if it is desired to improve reception of weak stations, an additional outdoor antenna may be used. Connect the outdoor antenna to the screw on the loop terminal strip marked "AM".

3. An internal power line antenna is provided for FM operation in relatively strong signal areas. An external dipole antenna is recommended for maximum FM operation. To connect the dipole, first remove the wire from the screw on the loop terminal strip marked "FM" and connect the dipole leads to the "FM" terminal and "G".

4. A ground connection is not required for AM and FM operation.

DESCRIPTION

TYPE: Amplitude modulation (AM) and frequency modulation (FM) superheterodyne.

FREQUENCY RANGE:
Broadcast band (AM)—540-1620 kilocycles
Frequency modulation band (FM)—88-108 megacycles

TYPE OF TUBES:
1—6BJ6 FM r-f amplifier
1—12AT7 FM converter
1—12BE6 AM converter
1—6BJ6 FM and AM i-f amplifier
1—6BJ6 2nd i-f FM amplifier
1—6BH6 FM limiter
1—19T8 FM discriminator, AM det., AVC and audio ampl.
1—50L6 power output
1—Selenium rectifier

POWER SUPPLY: 60 cycles

VOLTAGE RATING: 115v. a.c. and d.c.

POWER CONSUMPTION: 35 watts

CURRENT DRAIN: 0.30 amps. at 115 volts a.c.

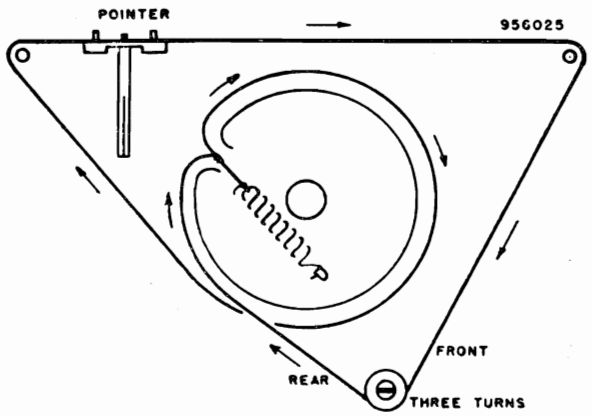

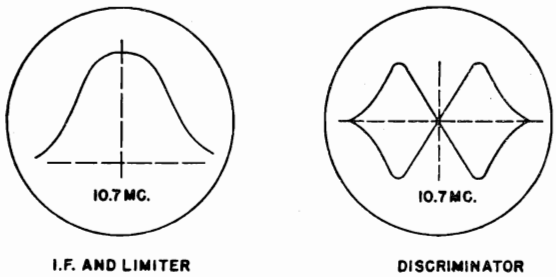

ALIGNMENT CURVES (FM)

©John F. Rider

Compliments of www.nucow.com

MODEL 659B,
Ch. 120126-B

ALIGNMENT INSTRUCTIONS

1. To position pointer, turn variable condenser fully closed and set pointer to reference mark on dial backplate at the low frequency end of the dial.
2. Volume control should be set at maximum position. The output of the signal generator should be no higher than necessary to obtain an output reading. Attenuate the signal input as alignment proceeds. Use an insulated alignment tool for all adjustments.
3. Use isolation transformer if available; otherwise connect a .1 mfd. condenser in series with low side of signal generator to chassis.

AM ALIGNMENT

	DUMMY ANTENNA	SIGNAL GENERATOR COUPLING	SIGNAL GENERATOR FREQUENCY	BAND SWITCH POSITION	RADIO DIAL SETTING	OUTPUT METER	ADJUST	REMARKS
1	.1 mfd.	High side to Pin 7 (grid) of 12BE6. Low side to chasis.	455 KC.	Broadcast	Tuning condenser fully open.	Across voice coil.	A1,A2,(Trans. T4). A3, A4, (Trans. T2).	Adjust for maximum output. Reduce dummy antenna to .001 mfd. if isolation trans. is not used.
2		Loop	1620 KC.	Broadcast	Tuning condenser fully open.	Across voice coil.	A5, (Trimmer cond. C6).	Form loop of several turns of wire. Radiate signal into receiver loop. Adjust for maximum output.
3		Loop	1400 KC.	Broadcast	Tune for max. outpt.	Across voice coil.	A6, (Trimmer cond. C5).	Adjust for maximum output.

FM I-F and Disc. Alignment Using AM Signal Generator and VTVM

	DUMMY ANTENNA	SIGNAL GENERATOR COUPLING	SIGNAL GENERATOR FREQUENCY	BAND SWITCH POSITION	RADIO DIAL SETTING	CONNECT VTVM	ADJUST	REMARKS
1	.01 mfd.	High side to Pin 1 (grid) of 6BJ6 2nd i-f (V5). Low side to chassis.	10.7 mc. (Unmodulated)	Frequency modulation	Tuning condenser fully open.	Connect d.c. probe to point "A". Common to chassis.	A7, (Trans. T5).	Adjust for maximum output.
2	.01 mfd.	High side to Pin 1 (grid) of 6BJ6 1st i-f (V3). Low side to chassis.	10.7 mc. (Unmodulated)	Frequency modulation	Tuning condenser fully open.	Connect d.c. probe to point "A". Common to chassis.	A8, A9, (Trans. T3).	Adjust for maximum output.
3	.01 mfd.	High side to Pin 7 of 12AT7 conv. (V2). Low side to chassis.	10.7 mc. (Unmodulated)	Frequency modulation	Tuning condenser fully open.	Connect d.c. probe to point "A". Common to chassis.	A10, A11, (Trans. T1).	Adjust for maximum output.
4	.01 mfd.	High side to Pin 1 (grid) of 6BJ6 2nd i-f (V5). Low side to chassis.	10.7 mc. (Unmodulated)	Frequency modulation	Tuning condenser fully open.	Connect d.c. probe to point "B". Common to chassis.	A12, (Trans. T6).	Adjust for maximum output.
5	.01 mfd.	"	10.7 mc. (Unmodulated)	Frequency modulation	Tuning condenser fully open.	Connect d.c. probe to point "C". Common to chassis.	A13, (Trans. T6).	Adjust for zero output, Continue with FM r-f alignment.

FM I-F AND DISC. ALIGNMENT USING SWEEP SIGNAL GENERATOR AND OSCILLOSCOPE. Use frequency modulated signal, with 60 cycle modulation and 450 k sweep. Use 120 cycle sawtooth sweep voltage in oscilloscope for horizontal deflection.

	DUMMY ANTENNA	SIGNAL GENERATOR COUPLING	SIGNAL GENERATOR FREQUENCY	BAND SWITCH POSITION	RADIO DIAL SETTING	CONNECT OSCILLOSCOPE	ADJUST	REMARKS
1	.01 mfd.	High side to Pin 1 (grid) of 6BJ6 1st i-f (V3). Low side of chassis.	10.7 mc. (Unmodulated).	Frequency modulation	Tuning condenser fully open.	Vertical input to Point "A". Ground to chassis.	A7, A8, A9, (Trans. T5 and T3).	Adjust for maximum output (height) and symmetry as per i-f alignment curve shown (page 3).
2	.01 mfd.	High side to Pin 7 of 12AT7 of conv. (V2). Low side to chassis.	10.7 mc. (Unmodulated).	Frequency modulation	Tuning condenser fully open.	Vertical input to Point "A". Ground to chassis.	A10, A11, (Trans. T1)	Adjust for maximum output (height) and symmetry as per i-f alignment curve shown (page 3).
3	.01 mfd.	High side to Pin 1 (grid) of 6BJ6 2nd i-f (V5). Low side to chassis.	10.7 mc. (Unmodulated).	Frequency modulation	Tuning condenser fully open.	Vertical input to Point "C". Ground to chassis.	A12, A13, (Trans. T6).	Alternately adjust A12 for maximum amplitude and A13 for maximum straightness of cross-over lines, with cross-over occurring at center of pattern as per discriminator alignment curve (page 3). Continue with FM r-f alignment.

FM R-F ALIGNMENT

	DUMMY ANTENNA	SIGNAL GENERATOR COUPLING	SIGNAL GENERATOR FREQUENCY	BAND SWITCH POSITION	RADIO DIAL SETTING	CONNECT VTVM	ADJUST	REMARKS
1	300 ohm resistor in series with gen. lead.	High side to FM ant. term. Low side to chassis.	109.0 mc. (Unmodulated).	Frequency modulation	Tuning condenser fully open	Connect d.c. probe to point "A". Common to chassis	A14 (Iron Core)	Adjust for maximum output.
2	"	"	106.0 mc.	Frequency modulation	Tune for maximum output.	"	A15 (Iron Core)	Adjust for maximum output.

INSTRUCTIONS FOR VOLTAGE AND RESISTANCE READINGS

1. Voltages readings are in d.c. volts and resistance reading in ohms, unless otherwise specified.
2. D.c. voltage measurements are made at 20,000 ohms-per-volt and a.c. voltages are measured at 1000 ohms-per-volt.
3. Socket connections are shown as bottom views. Values are measured from socket pin to common negative.
4. Line voltage maintained at 115 volts a.c. for voltage readings.
5. Nominal tolerance on component values makes possible a variation of ± 15% in readings.
6. Volume control at maximum, with no signal applied and bandswitch in broadcast position (unless otherwise noted), for voltage measurements.

©John F. Rider

Compliments of www.nucow.com

MODEL 659B,
Ch. 120126-B

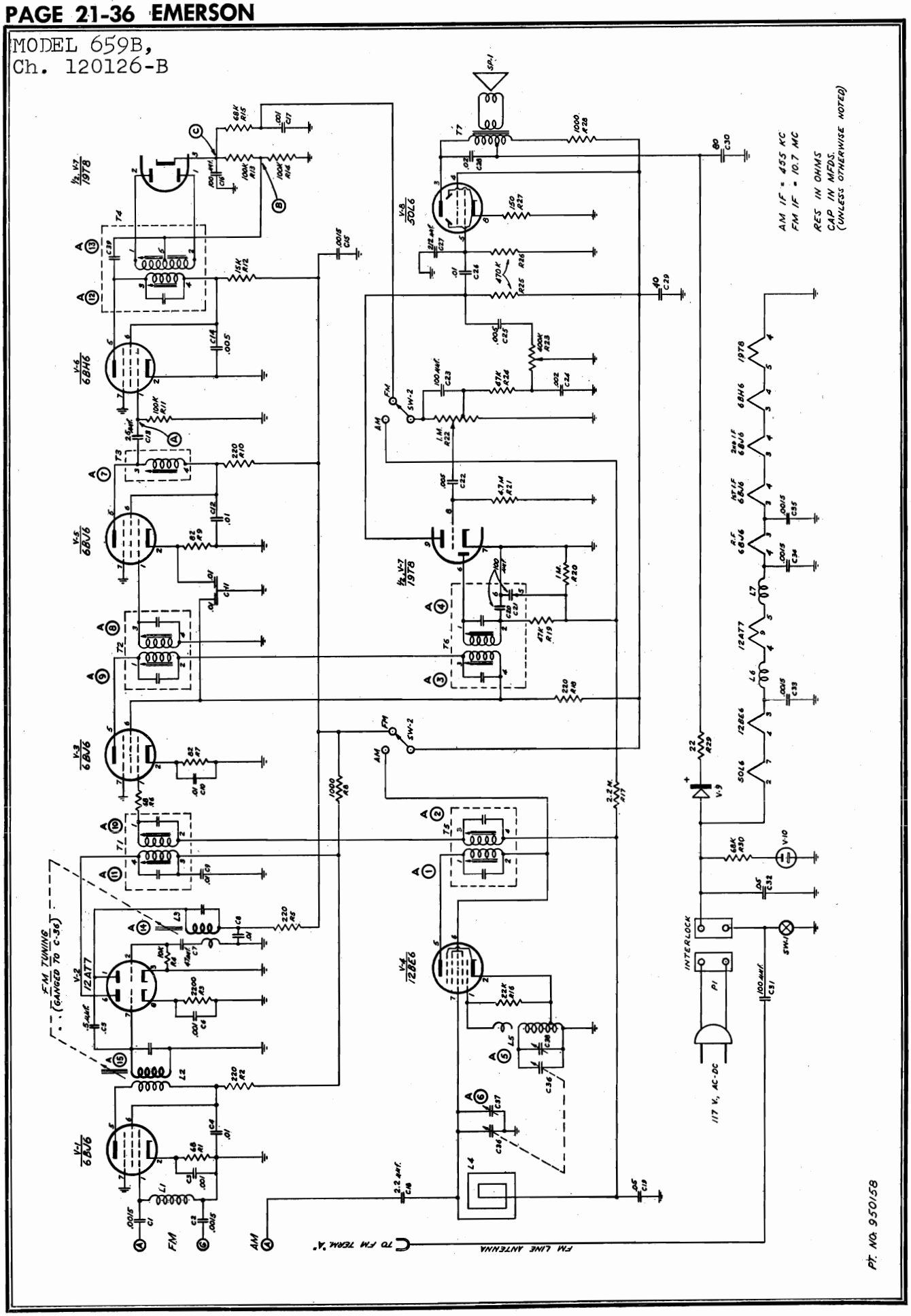

©John F. Rider

Compliments of www.nucow.com

MODEL 659B,
Ch. 120126-B

VOLTAGE READINGS (CHASSIS 120126-B)

SYMBOL	TUBE	PIN 1	PIN 2	PIN 3	PIN 4	PIN 5	PIN 6	PIN 7	PIN 8	PIN 9
V-1	6BJ6	0	.6*	35 AC	41 AC	78*	78*	0	—	—
V-2	12AT7	86*	-2.8*	0	53 AC	41 AC	80*	0	1.7*	NC
V-3	6BJ6	-.4	.8	35 AC	30 AC	100	100	0	—	—
V-4	12BE6	-7.6	0	53 AC	64 AC	100	100	-.4	—	—
V-5	6BJ6	0	.7*	30 AC	24 AC	86*	86*	0	—	—
V-6	6BH6	-.3	0	24 AC	18 AC	50*	50*	0	—	—
V-7	19T8	-.5*	-.6*	-.1*	0	18 AC	-.5	0	-.5	40
V-8	50L6	NC	115 AC	110	105	0	NC	64 AC	7.2	—

RESISTANCE READINGS (CHASSIS 120126-B)

SYMBOL	TUBE	PIN 1	PIN 2	PIN 3	PIN 4	PIN 5	PIN 6	PIN 7	PIN 8	PIN 9
V-1	6BJ6	0	68	42	50	200K*	200K*	0	—	—
V-2	12AT7	200K*	10K	0	62	50	200K*	0	2200	NC
V-3	6BJ6	3.2 meg.	82	42	35	200K*	200K*	0	—	—
V-4	12BE6	22K	.5	62	75	200K	200K	2.7 meg.	—	—
V-5	6BJ6	.6	82	35	28	200K*	200K*	0	—	—
V-6	6BH6	100K	0	28	20	200K*	200K*	0	—	—
V-7	19T8	100K	100K	175K*	0	20	500K	0	4.7 meg.	500K
V-8	50L6	NC	130	200K	200K	470K	NC	75	150	—

N.C. Denotes "No Connection."
*Denotes Bandswitch in FM Position Only.

CHASSIS PARTS LIST (CHASSIS 120126-B)

Symbol	Part No.	DESCRIPTION
C1	928006	1,500 MMF Ceramic
C2	928006	1,500 MMF Ceramic
C3	928053	.001 MF Ceramic, Circular
C4	928027	.01 MF Ceramic, Circular
C5	915029	.5 MMF (Sim. Stackpole Type GA) 500V ±10%
C6	928053	.001 MF Ceramic, Circular
C7	928102	.50 MMF Ceramic
C8	928027	.01 MF Ceramic, Circular
C9	928027	.01 MF Ceramic, Circular
C10	928027	.01 MF Ceramic, Circular
C11	928055	.01 MF Dual, Ceramic, Shilded
C12	928027	.01 MF Ceramic, Circular
C13	928110	.25 MMF Ceramic
C14	928109	.005 MF Ceramic, Circular
C15	928006	1,500 MMF Ceramic
C16	928013	100 MMF Ceramic ±20%
C17	928053	.001 MF Ceramic, Circular
C18	(Part of Loop)	2.2 MMF Ceramic
C19	920060	.05 MF Paper 200V ±25%
C20, C21	Pt. of T6	100 MMF
C22	920180	.005 MF Paper 400V ±25%
C23	928013	100 MMF Ceramic ±20%
C24	920545	.002 MF Paper 400V ±25%
C25	920180	.005 MF Paper 400V ±25%
C26	920090	.01 MF Paper 400V ±25%
C27	928104	212 MMF Ceramic
C28	920020	.02 MF Paper 400V ±25%
C29	925187	40 MF Electrolytic } Dual 150V
C30	925187	80 MF Electrolytic } Dual 150V
C31	928013	100 MMF Ceramic ±20%
C32	920030	.05 MF Paper 400V ±25%
C33	928006	1,500 MMF Ceramic
C34	928006	1,500 MMF Ceramic
C35	928006	1,500 MMF Ceramic
C36	900078	AM Variable Cond. FM Tuning Assembly
C37	(Pt.ofC36)	AM RF Trimmer
C38	(Pt.ofC36)	AM Osc. Trimmer
C39	(Pt.ofT4)	
R1	340212	68 Ohms ½W ±10%
R2	340332	220 Ohms ½W ±10%
R3	340572	2,200 Ohms ½W ±10%
R4	340732	10,000 Ohms ½W ±10%
R5	340332	220 Ohms ½W ±10%
R6	340212	68 Ohms ½W ±10%
R7	340232	82 Ohms ½W ±10%
R8	340492	1,000 Ohms ½W ±10%
R9	340232	82 Ohms ½W ±10%
R10	340332	220 Ohms ½W ±10%
R11	340970	100,000 Ohms ½W ±10%
R12	340770	15,000 Ohms ½W ±10%
R13	340970	100,000 Ohms ½W ±10%
R14	340970	100,000 Ohms ½W ±10%
R15	340930	68,000 Ohms ½W ±10%
R16	(Pt.ofL5)	22,000 Ohms
R17	351290	2.2 Meghoms ½W ±20%
R18	340332	220 Ohms ½W ±10%
R19	340890	47,000 Ohms ½W ±10%
R20	341210	1 Megohm ½W ±10%
R21	351370	4.7 Meg. ½W ±20%
R22	390161	1.0 Meg. Vol. Control } Dual Pot.
R23	(PtofR22)	400,000 Ohms Tone Control } with Switch
R24	340890	47,000 Ohms ½W ±10%
R25	351130	470,000 Ohms ½W ±20%
R26	351130	470,000 Ohms ½W ±20%
R27	340292	150 Ohms ½W ±10%
R28	394042	1000 Ohms 3W ±10%
R29	394027	22 Ohms 2W ±10%
R30	340930	68,000 Ohms
L1	713026	FM Ant. Coil
L2	713027	FM R.F. Coil
L3	716059	FM Osc. Coil
L4	700055	AM Loop Ant.
L5	716058	AM Osc. Coil
L6	705002	Filament Choke
L7	705002	Filament Choke
P1	505014	Safety Interlock Plug
SP1	180074	PM Speaker
SW1	(Pt.ofR22)	On-Off Switch
SW2	510076	Band Switch
T1	720126	1st FM I.F. Transformer
T2	720067	2nd FM I.F. Transformer
T3	720077	3rd FM I.F.
T4	708062	FM Discriminator Transformer
T5	720075	1st AM I.F. Transformer
T6	720076	2nd AM I.F. Transformer
T7	734062	Output Transformer
V1	800023	6BJ6, FM RF Amplifier
V2	800047	12AT7, FM Osc.-Mixer
V3	800023	6BJ6, FM-AM 1st I.F. Amplifier
V4	800525	12BE6, AM Osc.-Mixer
V5	800023	6BJ6, FM 2nd IF Amplifier
V6	800054	6BH6, FM Limiter
V7	800029	19T8, FM Discriminator, AM Det., 1nt A.F. Ampl.
V8	800070	50L6, Power Output
V9	817102	Selenium Rectifier, 100 MA.
	817101	
V10	807030	Pilot Bulb—Neon NE51

CABINET PARTS LIST FOR MODEL 659B

Part No.	DESCRIPTION	Part No.	DESCRIPTION
140358	Cabinet	450064	Knob—Bass-Treble
520133	Dial Crystal	587011	Spring Insert (¼" Knobs)
575649	Baffle and Grill Cloth	560153	Masonite Back
450068S	Knob—Tuning and AM-FM	583206	Line Cord
450099S	Knob—Volume		

©John F. Rider

Compliments of www.nucow.com

MODEL 671B,
Ch. 120137-B

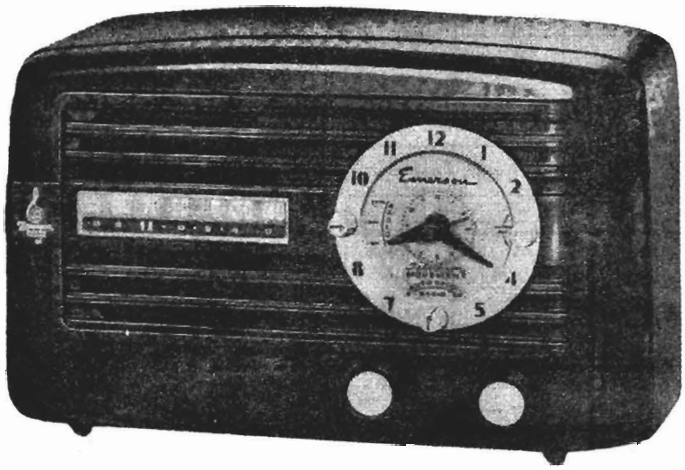

MODEL: 671B
CHASSIS: 120137-B

DESCRIPTION

TYPE: Single-band superheterodyne, with clock-timer.

FREQUENCY RANGE: 540-1620 kc.

TYPE OF TUBES:

V-1—12BE6, pentagrid oscillator-modulator

V-2—12BA6, first i-f amplifier

V-3—12AT6, diode detector, a-f amplifier, a.v.c.

V-4—50C5, beam power output

V-5—35W4, half-wave rectifier

POWER SUPPLY: A.C. 60 cycles only

VOLTAGE RATING: 105-125 volts.

POWER CONSUMPTION: 32 watts.

CURRENT DRAIN: 0.24 amp. at 117 volts a.c.

CHASSIS PARTS LIST (Chassis 120137-B)

ITEM	PART NO.	DESCRIPTION
C1	920030	.05 mfd. Paper 400V
C2	470310	220 mmf. Coupling Assy.
C3		220 mmf.
C4		.002 mf.
C5		.005 mf.
C6	920540	.02 mf. Paper 400V
C7	922101	.05 mf. Paper Molded 400V
C8	925061	30 & 50 mf. Electrolytic 150V
C9A	900082	Var. Cap.-Ant. Sect.
C9B		Var. Cap.-Osc. Sect.
C10	Pt. of C9A	Trimmer-Ant. Section
C11	Pt. of C9B	Trimmer-Osc. Section
C12	920040	.1 mf. Paper 200V
L1	700057	Ant. Loop & Back
L2	716064	Oscillator Coil
M1	470653	Clock Movement
P1	585082	Plug—3 Prong—and Cable Ass'y.
P2	583014	Plug and Line Cord Ass'y.
R1	351330	3.3 megohm. Carbon ½W ±20%

ITEM	PART NO.	DESCRIPTION
R2	Pt. of L2	22,000 ohm. Carbon ½W ±10%
R3	340272	120 ohm. Carbon ½W ±10%
R4	351450	10 megohm. Carbon ½W ±20%
R5	351130	470,000 ohm. Carbon ½W ±20%
R6	351130	470,000 ohm. Carbon ½W ±20%
R7	340292	150 ohm. Carbon ½W ±10%
R8	380532	1,500 ohm. Carbon 1W ±20%
R9	340072	18 ohm. Carbon ½W ±10%
R10	390177	500,000 ohm. Volume Control
SP1	180079	Loudspeaker—PM—5"
T1	720033	1st I.F. Transformer
T2	720033	2nd I.F. Transformer
T3	734065	Output Transformer
VI	800525	12BE6, Osc.—Mixer
V2	800524	12BA6, I.F. Amplifier
V3	800523	12AT6, Det., 1st A.F. Amp
V4	800032	50C5, Power Output
V5	800526	35W4, Rectifier
X1	500027	Socket—3 Prong—Clock

CABINET PARTS LIST (Model 671B)

PART NO.	DESCRIPTION
140387	Cabinet (Bakelite)
520141	Crystal
470653	Clock Movement
411108	Housing (Clock)
585080	3-Prong Plug and Cable Assemb.
460162S	Knob

©John F. Rider

Compliments of www.nucow.com

MODEL 671B,
Ch. 120137-B

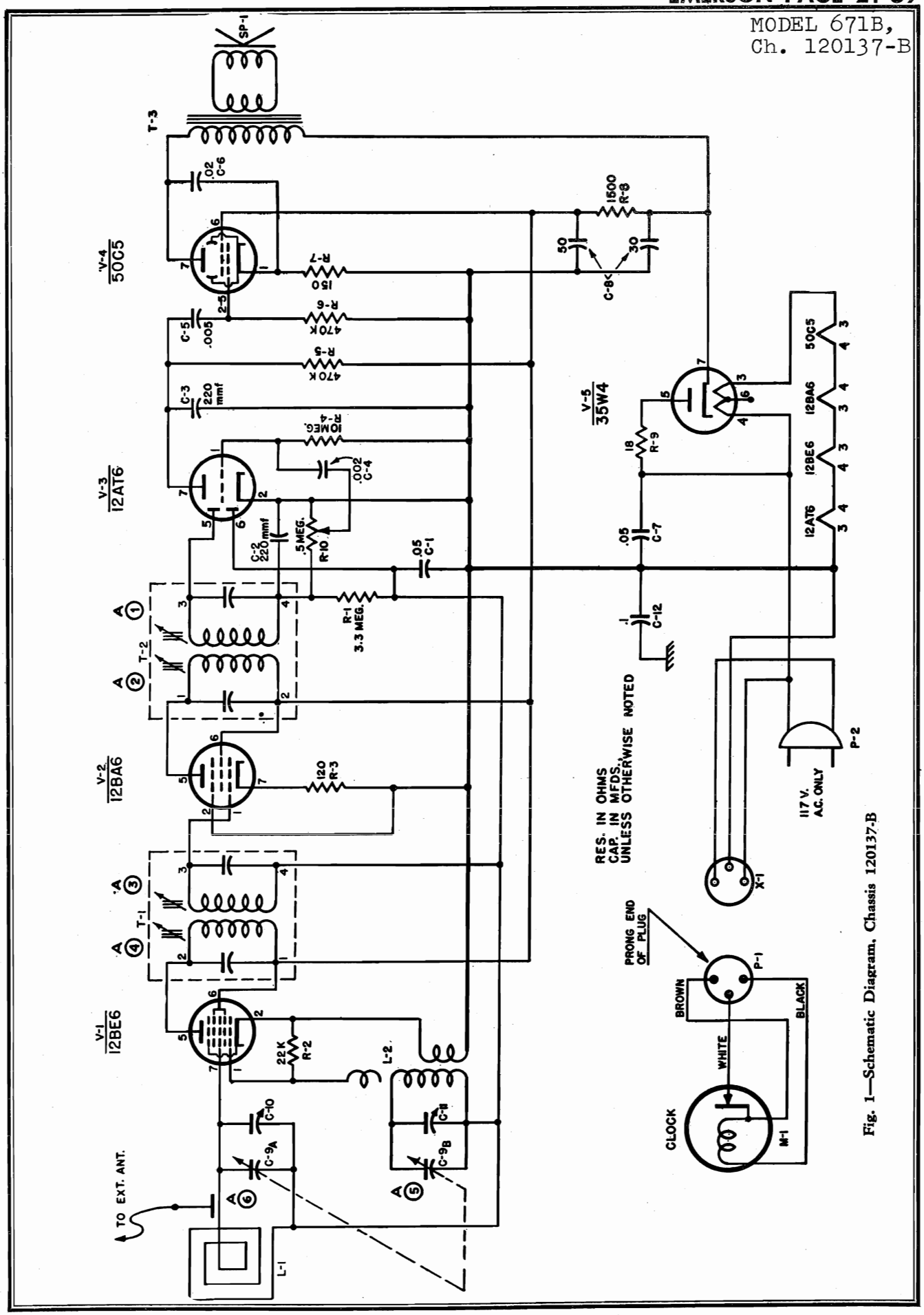

Fig. 1—Schematic Diagram, Chassis 120137-B

©John F. Rider

Compliments of www.nucow.com

MODEL 671B,
Ch. 120137-B

GENERAL NOTES

1. If replacements are made or the wiring disturbed in the r-f section of the circuit, the receiver should be carefully realigned.

2. This model has a self-contained antenna and does not require additional antenna connections. For permanent home installations, however, if it is desired to improve reception of weak stations, an additional outdoor antenna may be used. For this purpose a lead has been brought out in the rear. Use no ground connection.

3. The self-contained loop antenna operates at maximum efficiency when its position is at right angles to the broadcasting source. It is important, therefore, once the station is tuned in, to rotate the cabinet back and forth through a quarter of a circle (90 degrees), leaving it at the position where the station is received with maximum volume.

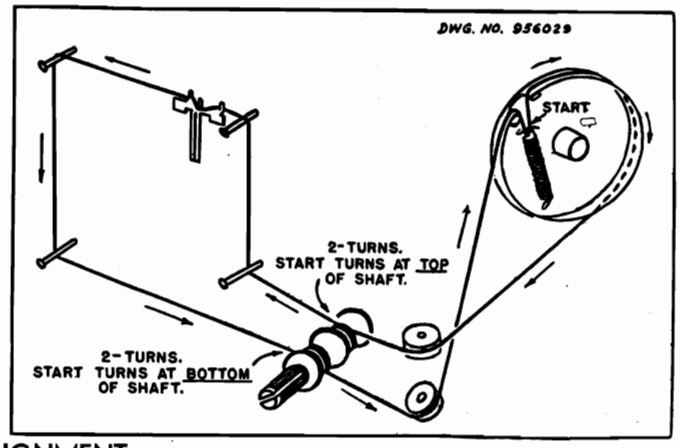

Fig. 2—Dial Cord Stringing, Model 671B

ALIGNMENT

To set pointer, turn variable condenser fully closed and set pointer at mark near left end of dial backplate. Use isolation transformer if available. If not, connect a 0.1 mfd. condenser in series with low side of signal generator and chassis. Volume control should be at maximum position; output of signal generator should be no higher than necessary to obtain an output reading. Use an insulated alignment screwdriver for adjusting.

	DUMMY ANTENNA	SIGNAL GENERATOR COUPLING	SIGNAL GENERATOR FREQUENCY	RADIO DIAL SETTING	METER OUTPUT	ADJUST	REMARKS
1	0.001 mfd.	High side to stator of rear section of tuning condenser. Low side to chassis.	455 kc	Variable condenser fully open.	Across voice coil.	A1, A2, A3, A4	Adjust for maximum output.
2	200 mmfd.	High side to external antenna lead. Low side to external ground lead.	1620 kc	Variable condenser fully open.	Across voice coil.	A5	Adjust for maximum output.
3	200 mmfd.	High side to external antenna lead. Low side to external ground lead.	1400 kc	Tune for maximum output.	Across voice coil.	A6	Adjust for maximum output.

VOLTAGE READING FOR CHASSIS 120137B

SYMBOL	TUBE	PIN 1	PIN 2	PIN 3	PIN 4	PIN 5	PIN 6	PIN 7
V-1	12BE6	—6.3 DC	0	24 AC	12 AC	90 DC	90 DC	—.8 DC
V-2	12BA6	—.8 DC	0	24 AC	36 AC	90 DC	90 DC	1. DC
V-3	12AT6	—.9 DC	0	0	12 AC	—.7 DC	—.8 DC	38 DC
V-4	50C5	5.5 DC	0	80 AC	36 AC	0	90 DC	110 DC
V-5	35W4	0	0	80 AC	117 AC	115 AC	110 AC	120 DC

RESISTANCE READINGS FOR CHASSIS 120137B

SYMBOL	TUBE	PIN 1	PIN 2	PIN 3	PIN 4	PIN 5	PIN 6	PIN 7
V-1	12BE6	2,400	0.4	26	14	300,000	300,000	4 meg.
V-2	12BA6	4 meg.	0	26	38	300,000	300,000	120
V-3	12AT6	10 meg.	0	0	14	500,000	4 meg.	800,000
V-4	50C5	150	470,000	90	38	470,000	300,000	350,000
V-5	35W4	N.C.	N.C.	90	125	150	120	350,000

VOLTAGE AND RESISTANCE READING INSTRUCTIONS

1. Voltage readings are in volts and resistance readings in ohms unless otherwise specified.
2. D-C voltage measurements are at 20,000 ohms per volt; a-c voltage measured at 1,000 ohms per volt.
3. Measured values are from socket pin to common negative.
4. Line voltage maintained at 117 volts 60 cycle for voltage readings.
5. Normal tolerance on component values makes possible a variation of ± 15% in voltage and resistance readings.
6. Volume control at maximum, no signal applied for voltage measurements.

NOTE: The radio and clock mechanism of Model 671B are covered by the Emerson warranty. If is should be necessary to have the clock mechanism repaired after the warranty has expired, it should be sent to the nearest authorized Telechron service station.

TO REMOVE THE CLOCK MECHANISM FROM THE CABINET THE FOLLOWING STEPS SHOULD BE TAKEN:

1. Remove radio chassis from cabinet.
2. Remove clock plug from chassis.
3. Remove three nuts located on back of clock and remove clock cover.
4. Carefully remove clock from *front* of cabinet.

©John F. Rider

Compliments of www.nucow.com

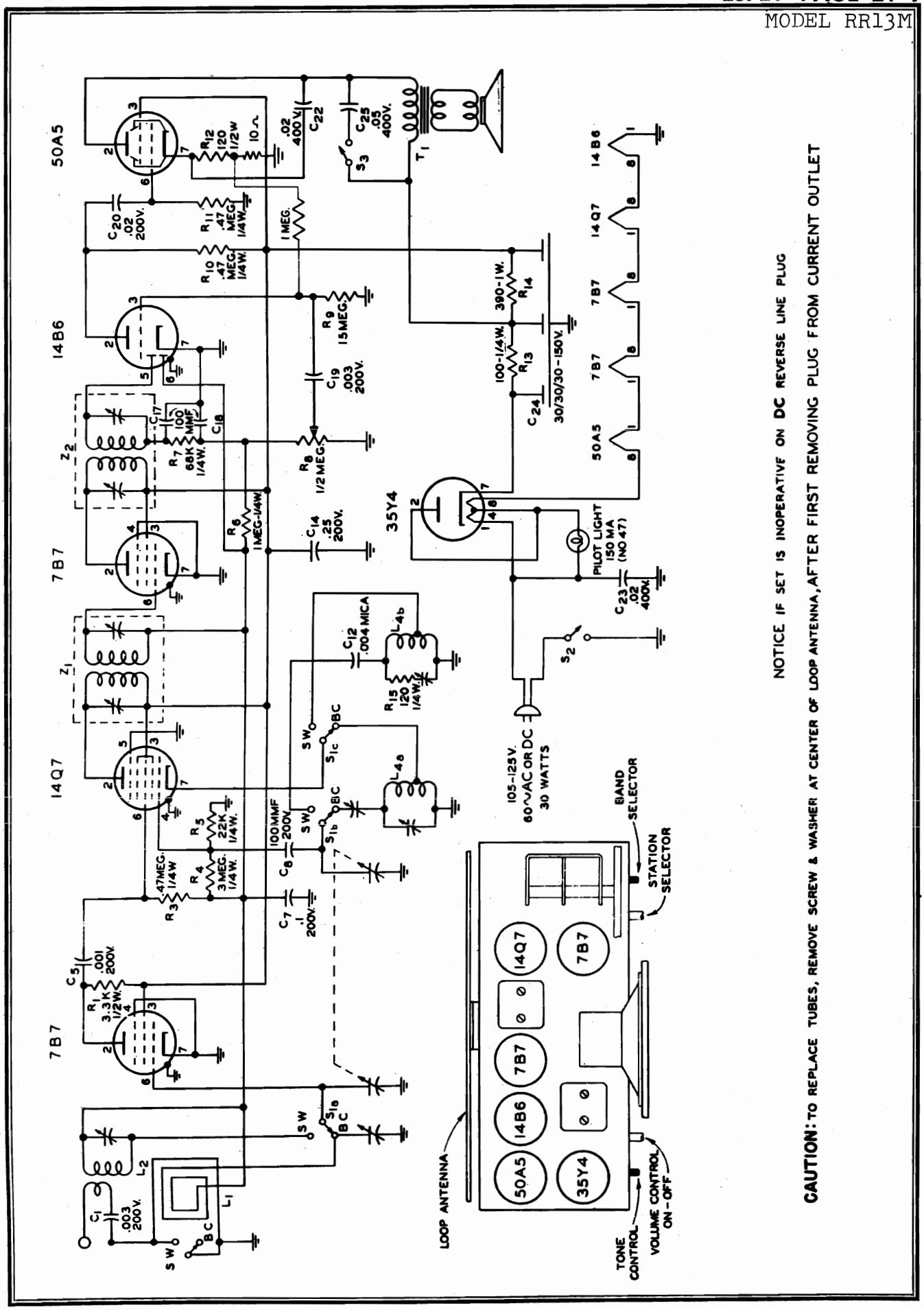

©John F. Rider

Compliments of www.nucow.com

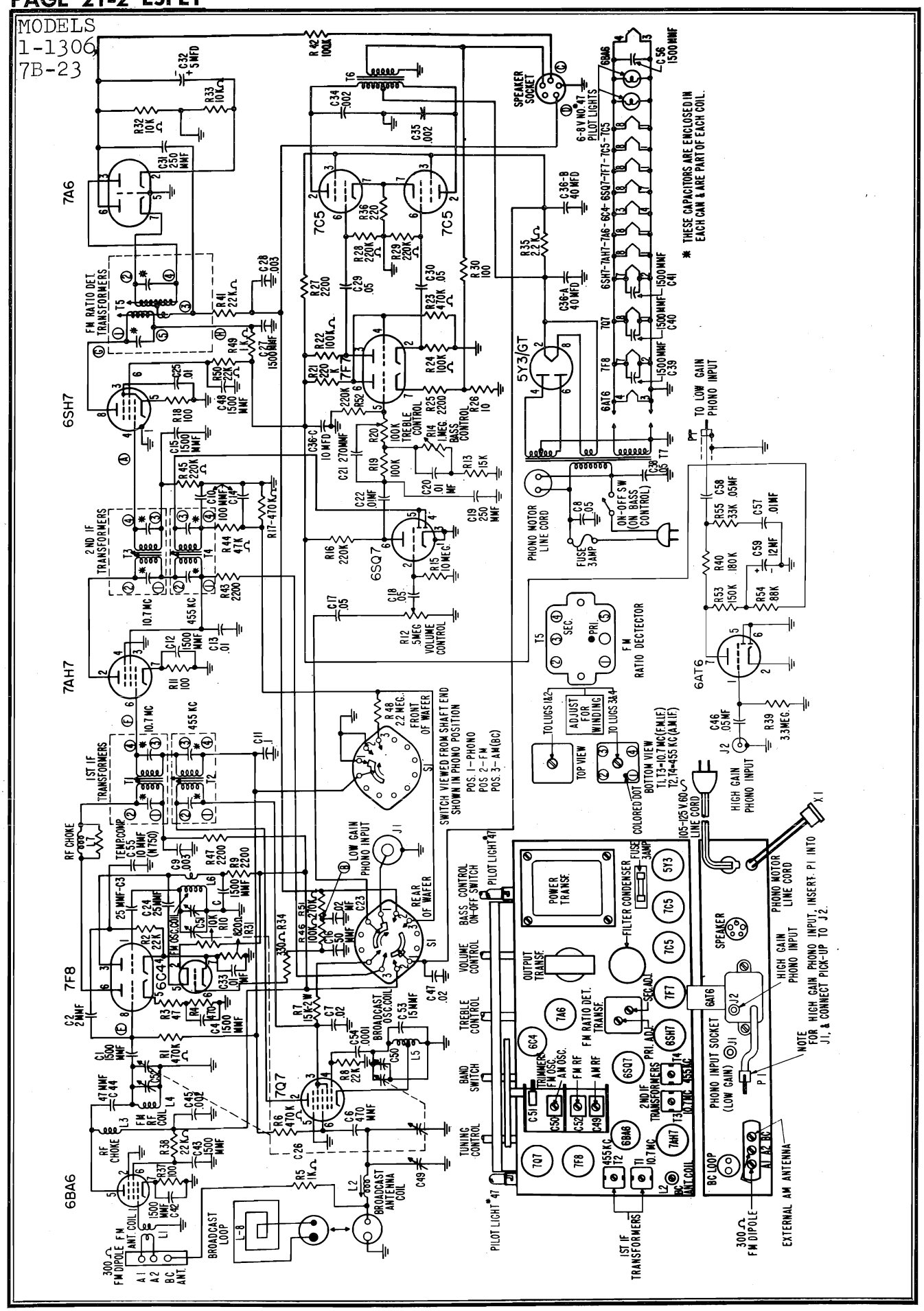

©John F. Rider

Compliments of www.nucow.com

MODEL 7B-22

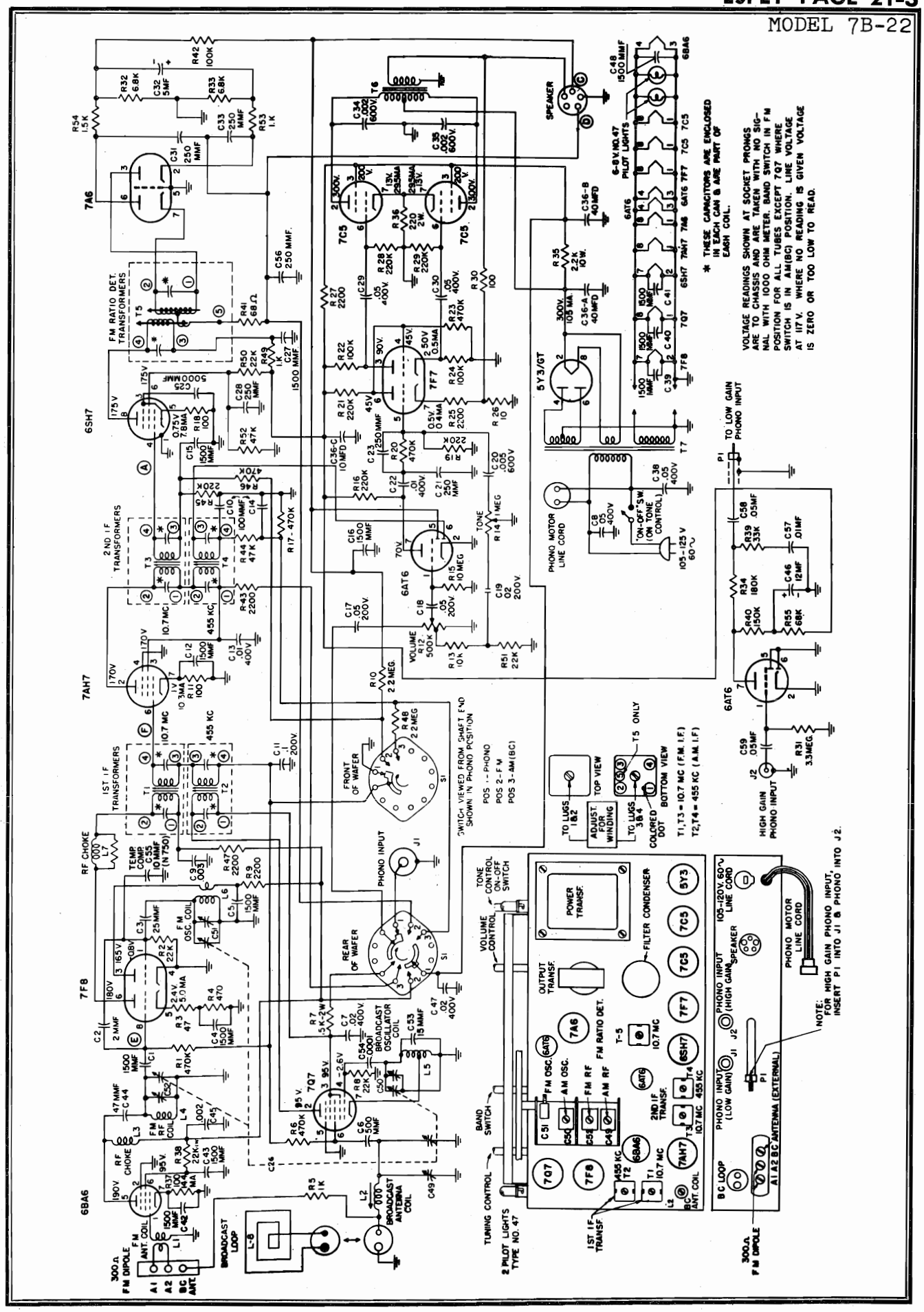

©John F. Rider

Compliments of www.nucow.com

MODELS 11RP,
15RP

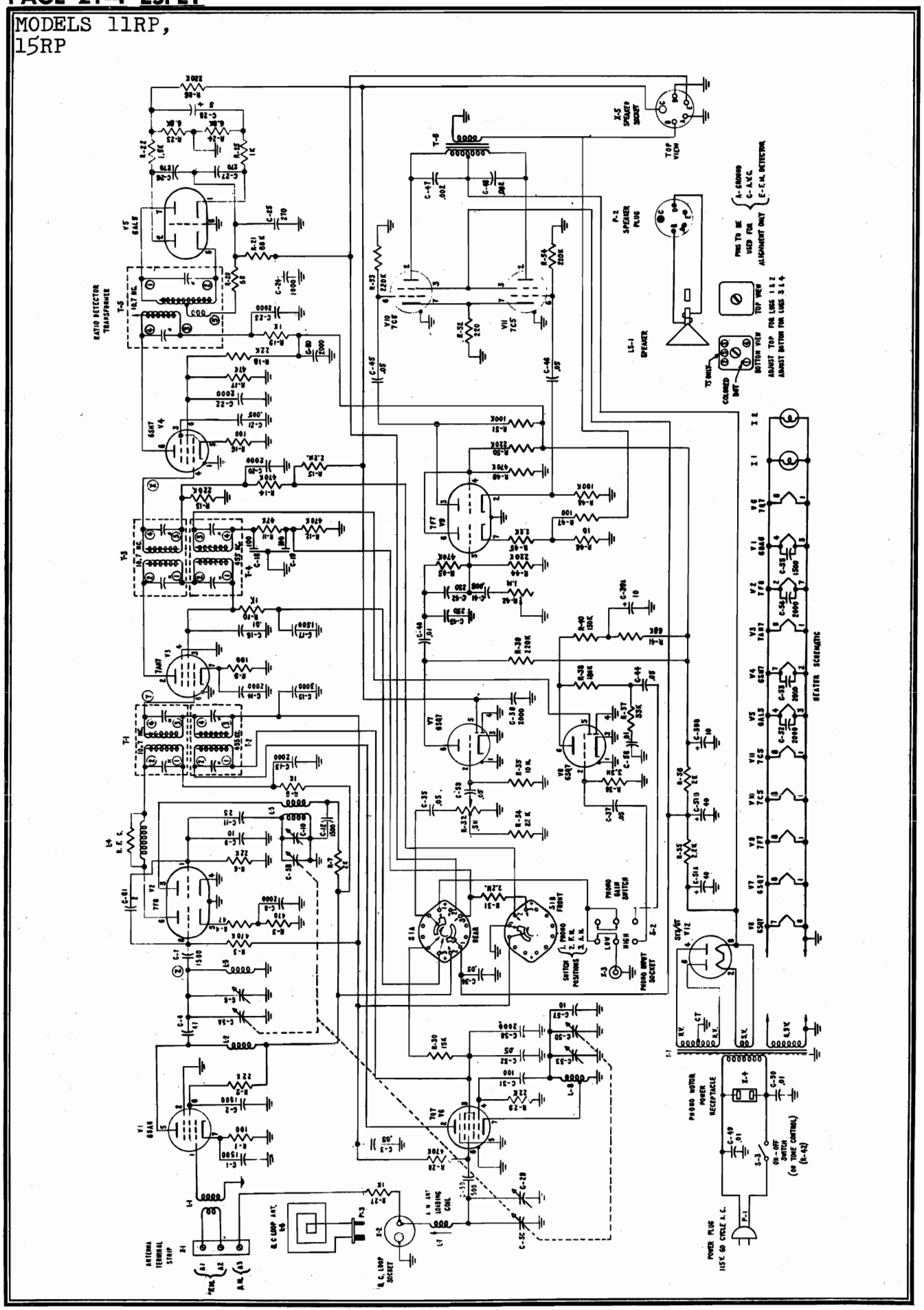

©John F. Rider

Compliments of www.nucow.com

MODEL 4-A-70

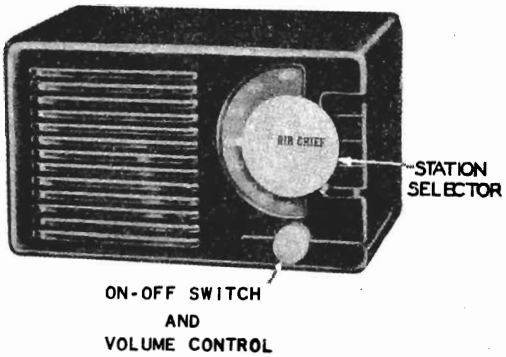

CABINET DIMENSIONS	8" X 4-3/4" X 4-7/8"	LOUD SPEAKER	4 Inch P.M.
WEIGHT	2 Lbs. 10 Ozs.	VOICE COIL IMPEDANCE	3.2 Ohm at 400 Cycles
POWER SUPPLY	110 to 120 Volt AC-DC	POWER OUTPUT	Undistorted - 0.9Watts Maximum - 1.8Watts
TUNING RANGE	535 to 1620 KC	TUBE COMPLEMENT	12AU6 - Converter 12AV6 - Diode Audio 50C5 - Output 35W4 - Rectifier
INTERMEDIATE FREQ.	455 KC		

ALIGNMENT PROCEDURE

For alignment procedure read tabulations from left to right, and make the adjustments marked (1) first, (2) next, (3) Third.

Before starting alignment

(A) Remove chassis and loop from cabinet. Leave loop in position on its mounting bracket. Turn tuning capacitor until plates are completely in mesh and replace tuning knob with indicator directly down.

(B) Use an accurately calibrated test oscillator with some type of output measuring device.

(C) When aligning the 1400 KC Antenna Trimmer and the 1620 KC Oscillator Trimmer, couple test oscillator to receiver loop by; (1) make loop consisting of two turns of #22 size wire wound on a form of 6" in dia. (2) connect this loop across output of test oscillator; (3) place test oscillator loop approximately a foot from and in the same plane as the receiver loop. BE SURE THAT NEITHER LOOP MOVES WHILE ALIGNING.

Steps	Set Receiver dial to:	TEST OSCILLATOR		Refer to parts layout diagram for location of trimmers mentioned below:
		Adjust test oscillator frequency to:	Attach output of test oscillator to:	
1	ANY POINT WHERE NO INTERFERING SIGNAL IS RECEIVED, WITH TUNING CONDENSER NEAR CENTER	455 K.C.	HIGH SIDE TO REAR STATOR PLATES OF TUNING CONDENSER. LOW SIDE TO COMMON NEGATIVE THROUGH A .05 MFD BLOCKING CONDENSER	ADJUST SLUGS AT TOP AND BOTTOM OF I.F. CAN FOR MAXIMUM OUTPUT.
2	EXACTLY 1620 K.C.	EXACTLY 1620 K.C.	SEE PARAGRAPH "C" ABOVE	ADJUST 1620 K.C. OSCILLATOR TRIMMER FOR MAXIMUM OUTPUT.
3	APPROX. 1400 K.C.	APPROX. 1400 K.C.	SEE PARAGRAPH "C" ABOVE	ADJUST 1400 K.C. ANTENNA TRIMMER FOR MAXIMUM OUTPUT.

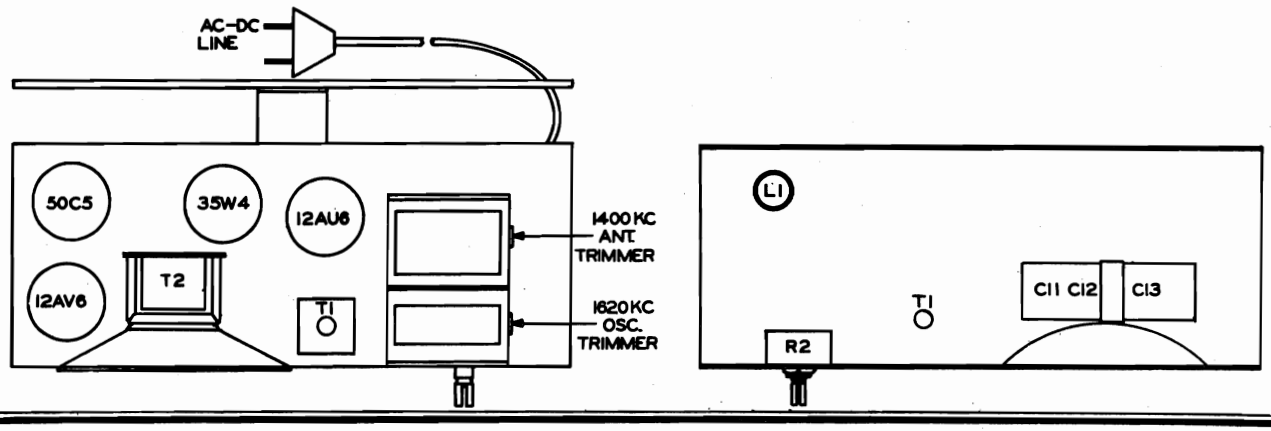

©John F. Rider

Compliments of www.nucow.com

MODEL 4-A-70

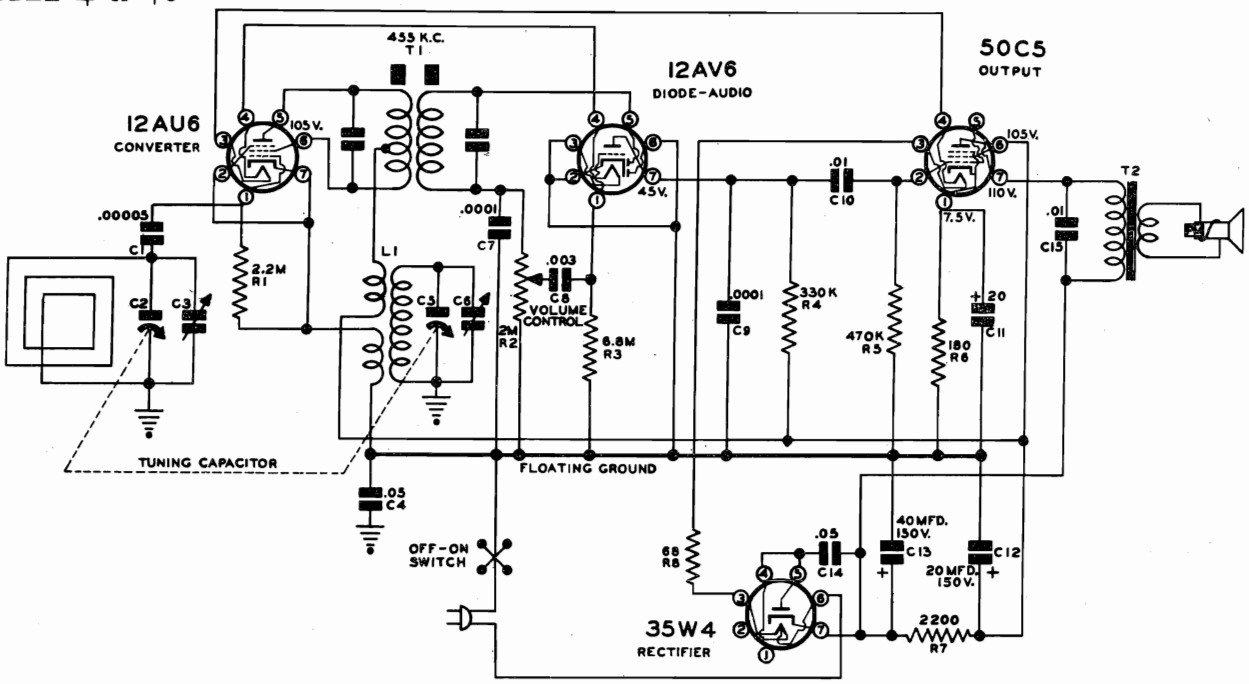

Be sure R.F. and I.F. stages are accurately aligned before measuring gain. R.F. gains can be measured with a "channel" type instrument containing a tuned and calibrated R.F. amplifier. A vacuum tube voltmeter may be used for audio gain measurements. Observe following precautions:

1. For all gain measurements connect signal generator as shown. Use 600 KC. signal with 400 cycle modulation (use nearby frequency if local station interferes.)
2. Be sure radio is carefully tuned to generator signal (use weak signal for sharp tuning.)
3. When using a "channel type instrument carefully tune it for maximum output at desired frequency before making measurements.

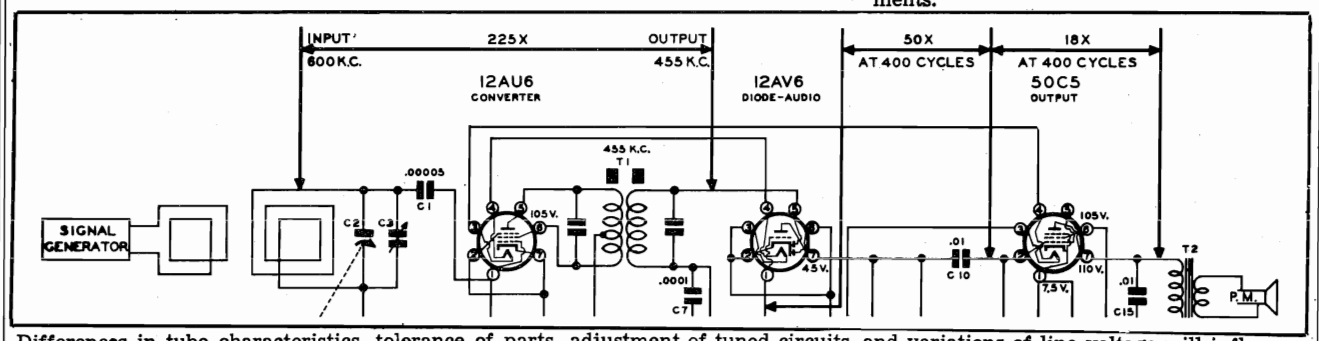

Differences in tube characteristics, tolerance of parts, adjustment of tuned circuits, and variations of line voltage will influence stage gain. Accuracy of measurements is dependent upon careful tuning of receiver to generator signal and experience in using your test exquipment. These factors may create considerable variation in gain measurements.

PARTS LIST

ILLUS. NO.	PART NUMBER	PART NAME	DESCRIPTION
C1	N-6385	Condenser	Ceramic 50 MMFD. 500 V.
C7,C9	N-6015	Condenser	Ceramic 100 MMFD. 500 V.
C4	N-1345	Condenser	Tubular .05 MFD. 200 V.
C8	N-2063	Condenser	Tubular .003 MFD. 600 V.
C10,C15	N-1344	Condenser	Tubular .01 MFD. 400 V.
C11)			(20 MFD. 15 V.)
C12)	N-7153	Condenser	Dry Electrolytic (20 MFD. 150 V.)
C13)			(40 MFD. 150 V.)
C14	N-1346	Condenser	Tubular .05 MFD. 400 V.
R1	N-4277	Resistor	Carbon 2.2 Megohm 1/2 W. 20%
R2	N-7142	Volume Control	2.0 Meghohm with Switch
R3	N-4028	Resistor	Carbon 6.8 Megohm 1/2.W. 20%
R4	N-4423	Resistor	Carbon 330,000 Ohm 1/2 W. 20%
R5	N-4027	Resistor	Carbon 470,000 Ohm 1/2 W. 20%
R6	N-4067	Resistor	Carbon 180 Ohm 1/2 W. 10%
R7	N-4896	Resistor	Carbon 2,200 Ohm 1/2 W. 10%
R8	N-6014	Resistor	Carbon 68 Ohm 2.0 W. 10%
T1	N-7694	Coil	I.F. Transformer
L1	N-7725	Coil	Oscillator
	N-7670	Antenna	Loop and Cabinet Back
	N-7141	Condenser	Two Gang, Tuning
	N-7824	Speaker	4" PM with Output Transformer
	#299	Cabinet	Walnut Plastic (with Dial Scale and Carton)
	N-1090	Cord	6 Foot Rubber Line Cord
	N-1270	Knob	Station Selector
	N-7826	Knob	Volume

REAR OF CHASSIS

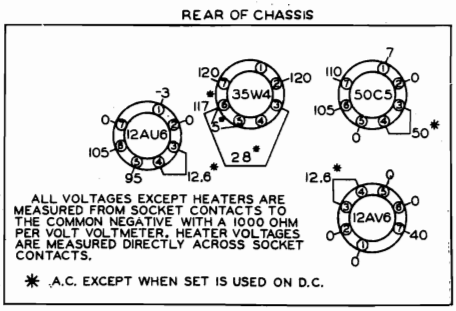

VOLTAGE TABLE
(BOTTOM VIEW OF CHASSIS)

©John F. Rider

Compliments of www.nucow.com

MODELS 4-A-78, 4-A-79

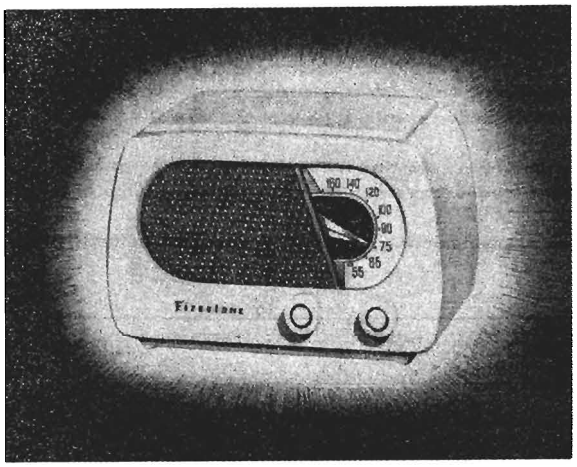

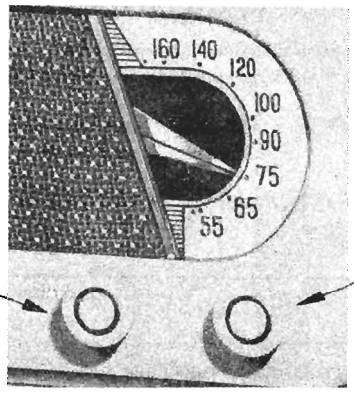

CABINET DIMENSIONS	8¾" x 5" x 5½"
WEIGHT	3½ lbs.
POWER SUPPLY	110 to 120 Volt AC-DC
TUNING RANGE	1650 to 530 KC
INTERMEDIATE FREQ.	455 KC
LOUD SPEAKER	3 Inch P.M.
VOICE COIL IMPEDANCE	3.2 OHM at 400 Cycles
POWER OUTPUT	Undistorted—0.9 Watts Maximum—1.5 Watts
TUBE COMPLEMENT	12BE6 Oscillator Modulator, 12BA6 IF, 12AT6 Det. AVC., 50B5 Power Output, 35W4 Rectifier

Steps	Set receiver dial to:	TEST OSCILLATOR		Refer to parts layout diagram for location of trimmers mentioned below:
		Adjust test oscillator frequency to:	Attach output of test oscillator to:	
1	Any point where no interfering signal is received.	455 K. C.	High side to rear stator plates of tuning condenser. Low side to common negative through a .02 Mfd. blocking condenser.	Adjust each of the second I.F. transformer trimmers for maximum output—then adjust each of the first I.F. trimmers for maximum output.
2	Exactly 1650 K. C.	Exactly 1650 K. C.	See paragraph (C) above	Adjust 1650 K. C. oscillator trimmer for maximum output.
3	Approx. 1400 K. C.	Approx. 1400 K. C.	See paragraph (D) above	Adjust 1400 K. C. antenna trimmer for maximum output.

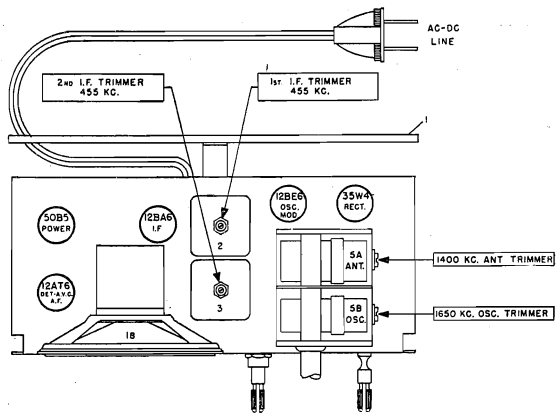

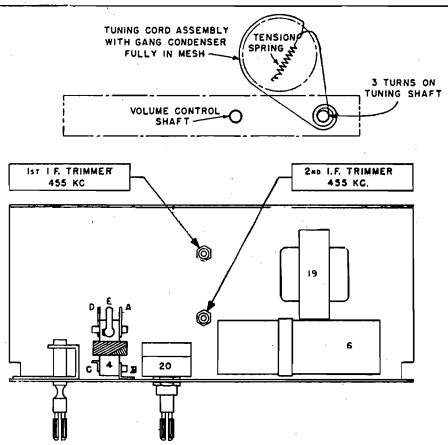

©John F. Rider

Compliments of www.nucow.com

ALIGNMENT PROCEDURE

For alignment procedure read tabulations from left to right, and make the adjustment marked (1) first, (2) next, (3) third.

Before starting alignment:

(A) Check tuning dial adjustment by tuning gang condenser until plates touch maximum capacity stop (completely in mesh) at which point the dial needle must be exactly even with the last line at the low frequency end of the dial calibration. If dial needle does not point exactly to last line move to correct position.

(B) Use an accurately calibrated test oscillator with some type of output measuring device.

(C) WHEN ADJUSTING THE 1650 KC OSCILLATOR TRIMMER, remove chassis from cabinet and disconnect the loop connection wires from the loop. Attach a 1 megohm resistor across these connections and feed output of test oscillator across the 1 megohm resistor.

(D) THE 1400 KC LOOP ANTENNA TRIMMER should be adjusted only after all other adjustments have been made. PLACE LOOP ANTENNA IN THE SAME POSITION IT WILL BE IN WHEN THE SET IS IN THE CABINET—APPROXIMATELY 5/8" SPACE BETWEEN LOOP AND CHASSIS.

When aligning the 1400 KC Antenna Trimmer, couple test oscillator to receiver loop by: (1) make loop consisting of five to ten turns of No. 20 to No. 30 size wire, wound on a 2" or 3" form; (2) connect this loop across output of test oscillator; (3) place test oscillator loop near radio loop. BE SURE THAT NEITHER LOOP MOVES WHILE ALIGNING.

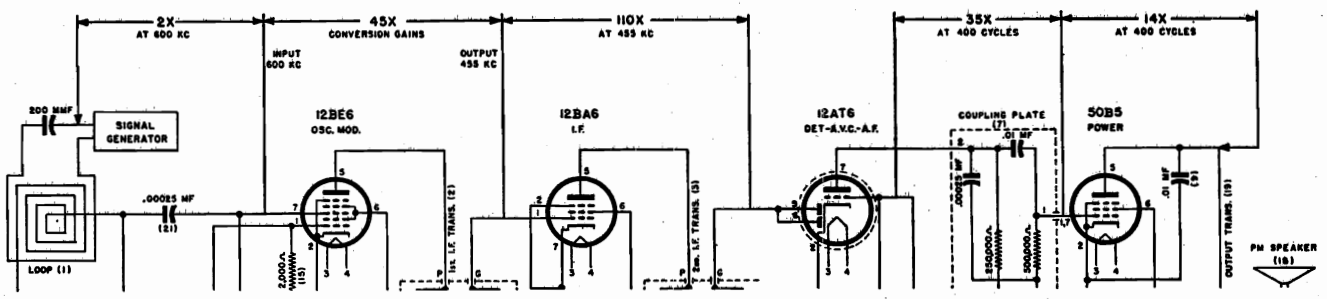

Differences in tube characteristics, tolerance of parts, adjustment of tuned circuits, and variations of line voltage will influence stage gain. Accuracy of measurements is dependent upon careful tuning of receiver to generator signal and experience in using your test equipment. These factors may create considerable variation in gain measurements.

1. For all gain measurements connect signal generator as shown. Use 600 KC. signal with 400 cycle modulation (use nearby frequency if local station interferes.)

2. Be sure radio is carefully tuned to generator signal (use weak signal for sharp tuning.)

3. When using a "channel" type instrument carefully tune it for maximum output at desired frequency before making measurements.

ORDERING PARTS

Order parts from your nearest Firestone Tire and Auto Supply Warehouse. When ordering parts, it is important that the correct code number, stock number, and serial number be given with the correct part name and part number as shown in the parts list. You will find the stock number and code number stamped on the chassis pan.

Be sure R.F. and I.F. stages are accurately aligned before measuring gain. R.F. gains can be measured with a "channel" type instrument containing a tuned and calibrated R.F. amplifier. A vacuum-tube voltmeter may be used for audio gain measurements. Observe following precautions:

©John F. Rider
Compliments of www.nucow.com

MODELS 4-A-78, 4-A-79

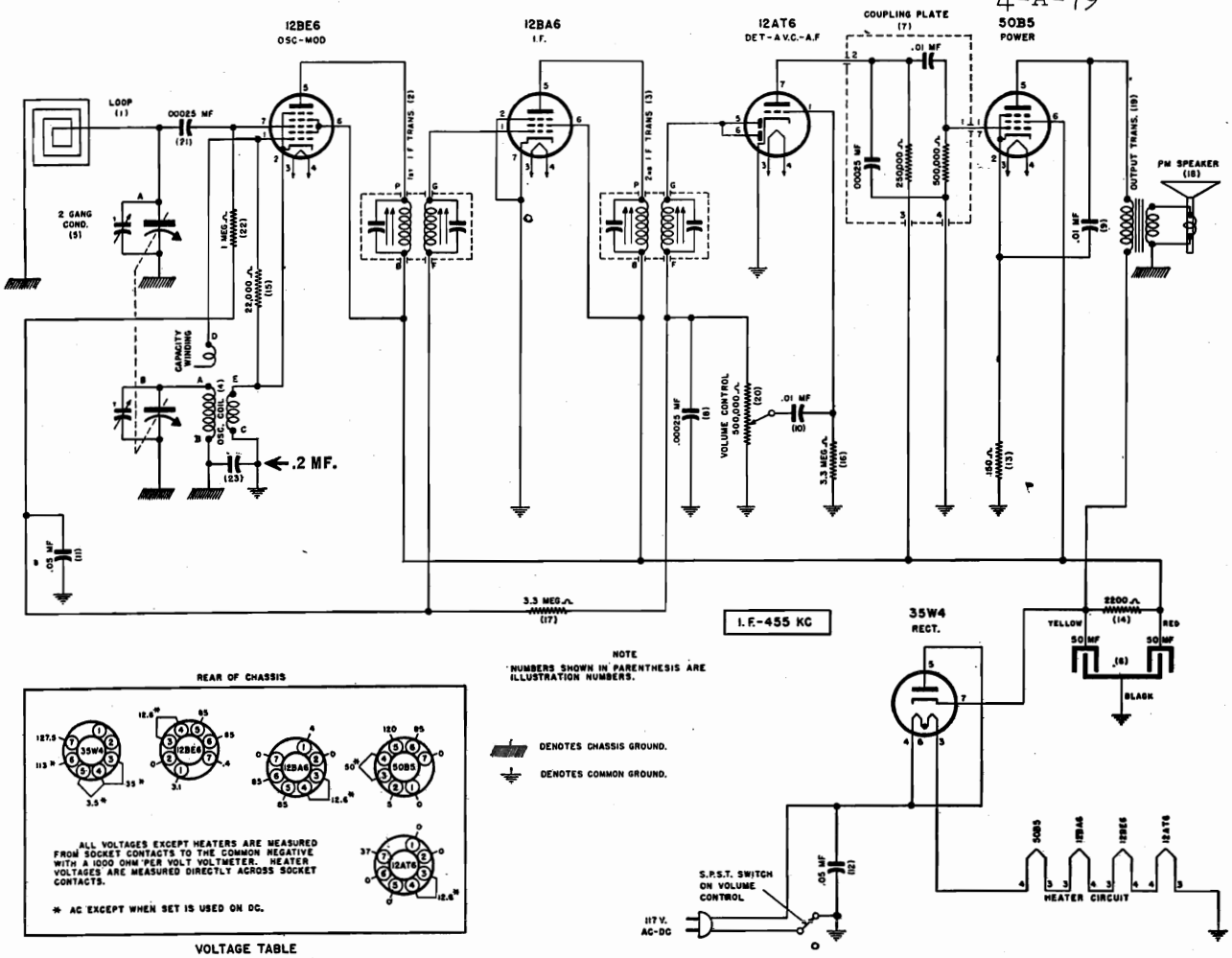

PARTS LIST

Illus. No.	Part No.	Part Name	Description
1	64E27	Antenna	Loop and cabinet back
2	20E378	Coil	1st I. F. Transformer
	OR		
2	20E402	Coil	1st I. F. Transformer
3	20E378	Coil	2nd I. F. Transformer
	OR		
3	20E402	Coil	2nd I. F. Transformer
4	20E346	Coil	Oscillator
5	24E45	Condenser	Two Gang, Tuning
6	**25E24**	**Condenser**	**Dry Electrolytic, 50-50 Mfd. 150 Volt**
7	23E2023	Condenser	Ceramic, Coupling Plate
8	23E42	Condenser	Mica, .00025 Mfd. 500 V.
	OR		
8	23E2027	Condenser	Ceramic, .00025 Mfd. 500 V.
9	23E411	Condenser	Tubular, .01 Mfd. 400 V.
10	23E211	Condenser	Tubular, .01 Mfd. 200 V.
11	23E216	Condenser	Tubular, .05 Mfd. 200 V.
12	23E416	Condenser	Tubular, .05 Mfd. 400 V.
13	27E151	Resistor	Carbon, 150 Ohm, 1/3 W.
14	27E222-3	Resistor	Carbon, 2200 Ohm, 1 W.
15	27E223	Resistor	Carbon, 22,000 Ohm, 1/3 W.
16	27E335	Resistor	Carbon, 3.3 Megohm, 1/3 W.
17	27E335	Resistor	Carbon, 3.3 Megohm, 1/3 W.
18	1E32	Speaker	3" P.M.
19	22E49	Transformer	Output
20	**28E27**	**Vol. Control**	**500,000 Ohm, with Switch**
21	23E2027	Condenser	Ceramic, .00025 Mfd. 500 V.
22	27E105	Resistor	Carbon, 1 Megohm 1/3 W.
23	23E2021	Condenser	Tubular, .2 Mfd. 400 V.

MISCELLANEOUS PARTS

Part No.	Part Name	Description
7E196-22	**Cabinet**	**Walnut Plastic for 4A78**
7E196-29	**Cabinet**	**Ivory Plastic for 4A79**
41E14	Cord	5 Ft. Rubber Line Cord
20E253-25	Dial Cord	Dial Drive Cord
36E50	Dial Scale	Calibrated Dial Scale
20E348-3	Dial Shaft Assy.	Dial Drive Shaft with Bracket
35E27-2	Dial Pointer	Dial Indicator
65E2	Dial Spring	Tension Spring for Dial Cord
37E52-12	Knob	For Walnut Cabinet 4A78
37E52-14	Knob	For Ivory Cabinet 4A79

MOUNTING HARDWARE

Part No.	Part Name	Description
19E27	Nut	Slotted head, holds chassis in cabinet.
10E42	Stud	Trimount Stud for loop and back
10E43	Stud	Trimount Stud for baffle and dial scale.
10E41	Stud	Trimount stud for dial scale

©John F. Rider

Compliments of www.nucow.com

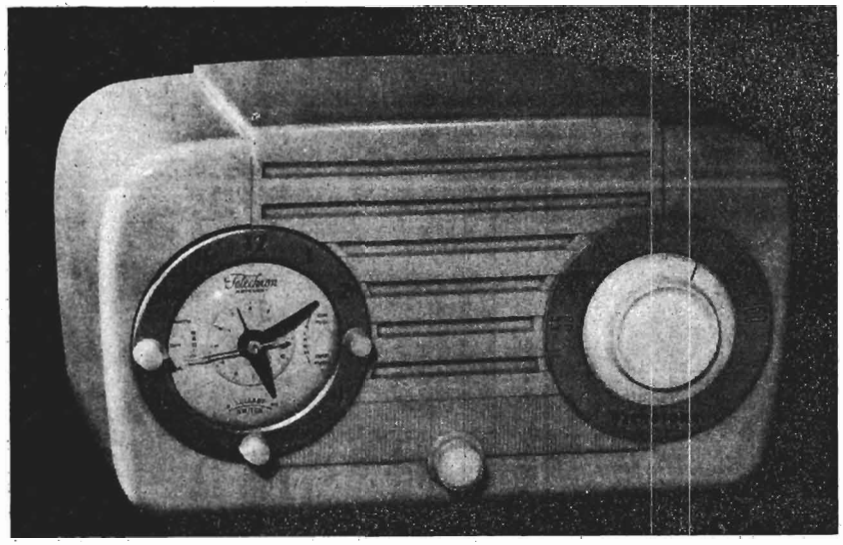

(2) TO TURN RADIO ON MANUALLY

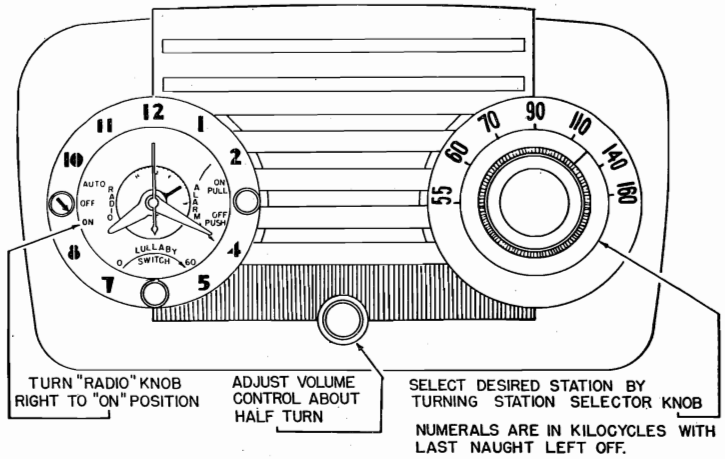

Instructions for Using Your RADIO-ALARM CLOCK

This skillfully designed and carefully constructed combination will give you long and enjoyable service. This Receiver can perform the following services for the user:

1. Provide accurate time.
2. Receive broadcast programs being transmitted and within range—at any time.
3. Turn off radio program at will of user up to 60-minute interval or less.
4. Turn on radio program for awakening.
5. Turn buzzer alarm on 10 minutes after radio starts playing.
6. Turn on buzzer alarm for awakening — with radio silenced.

INSTALLATION—Check the voltage and cycles of the electric power supplied to your home. This combination will operate ONLY on 60 cycle alternating current (ac), from 105 to 125 volts. THIS SET WILL NOT OPERATE ON ANY OTHER TYPE OF CURRENT OR CYCLES. Your electric company will help you make certain that you have the correct kind of power.

This combination includes a sensitive five multi-purpose tube super-heterodyne radio including a rectifier tube. Your radio has a self contained duro-loop antenna capable of supplying sufficient volume in areas of normal reception. If you live in an area where radio reception is poor, you can improve the performance by connecting an outside antenna to the screw marked EXT. ANT. which you will find on the right hand side of the rear of the cabinet.

(1) TO SET THE CLOCK

Your self-starting TELECHRON movement will begin operating when the set is plugged into the proper outlet and your sweep second hand begins to rotate. Set the correct time by means of the small knob at the right REAR of the cabinet. Turn ONLY in the direction shown on the back cover.

©John F. Rider
Compliments of www.nucow.com

MODEL 4-A-83, Slumbertone

(3) TO TURN OFF RADIO MANUALLY

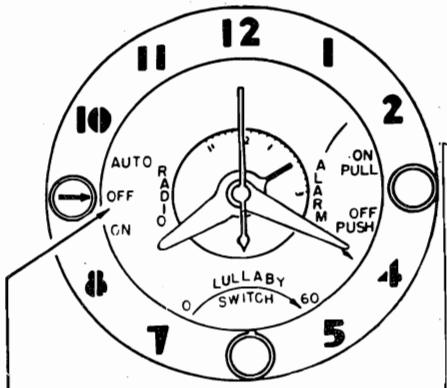

TURN "RADIO" KNOB LEFT TO "OFF" POSITION.

(4) TO AWAKEN TO MUSIC

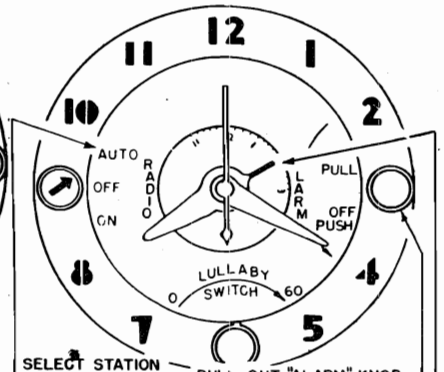

SELECT STATION AND ADJUST VOLUME TO LEVEL SUFFICIENT TO AWAKEN YOU. (AS INDICATED IN ILLUSTRATION 2.)

TURN "RADIO" KNOB LEFT TO "AUTO" POSITION.

PULL OUT "ALARM" KNOB AND TURN IN COUNTER CLOCKWISE (ARROW) DIRECTION UNTIL POINTER IS OVER HOUR FIGURE AND MINUTE MARKS DESIRED FOR AWAKENING. THIS TIME SETTING MAY BE 11 HOURS IN ADVANCE OR LESS. AFTER HAVING SET AWAKENING HOUR PUSH IN "ALARM" KNOB.

(5) TO AWAKEN TO BUZZER ALARM

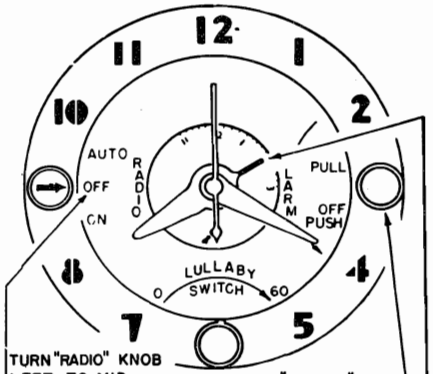

TURN "RADIO" KNOB LEFT TO MID "OFF" POSITION

PULL OUT "ALARM" KNOB AND TURN IN COUNTER CLOCKWISE (ARROW) DIRECTION UNTIL POINTER IS SET TEN MINUTES AHEAD OF HOUR FIGURE AND MINUTE MARKS DESIRED FOR AWAKENING. THIS TIME SETTING MAY BE 11 HOURS IN ADVANCE OR LESS.

FOR EXAMPLE :- SHOULD YOU DESIRE TO AWAKEN AT 7, SET ALARM POINTER TO 6:50 (TO SHUT OFF BUZZER PUSH IN "ALARM" KNOB.)

(6) TO AWAKEN TO MUSIC AND BUZZER ALARM

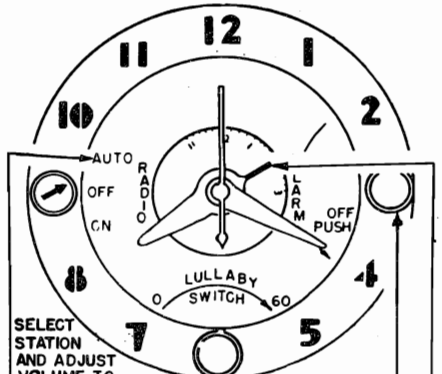

SELECT STATION AND ADJUST VOLUME TO LEVEL SUFFICIENT TO AWAKEN YOU (AS INDICATED IN ILLUSTRATION 2).

TURN "RADIO" KNOB LEFT TO "AUTO" POSITION.

PULL OUT "ALARM" KNOB AND TURN IN COUNTER CLOCKWISE (ARROW) DIRECTION UNTIL POINTER IS OVER HOUR FIGURE AND MINUTE MARKS DESIRED FOR AWAKENING. THIS TIME SETTING MAY BE 11 HOURS IN ADVANCE OR LESS.

BUZZER SOUNDS AS A REMINDER APPROXIMATELY 10 MINUTES AFTER RADIO COMES ON TO SHUT OFF BUZZER PUSH IN "ALARM" KNOB.

(7) TO TURN RADIO OFF AUTOMATICALLY WHEN RETIRING

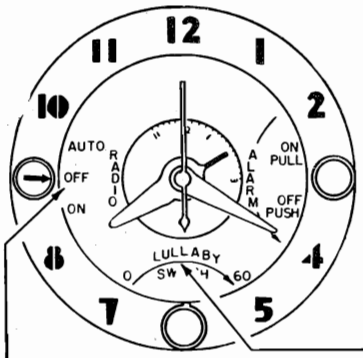

TURN "RADIO" KNOB TO MID "OFF" POSITION

TURN LULLABY KNOB CLOCKWISE (TO RIGHT) FOR PLAYING TIME DESIRED. ESTIMATE TIME BETWEEN 0 AND 60 MARKS ALONG ARROW

(8)—To Turn Radio Off Automatically When Retiring and Awaken to Music

Set Controls as in Illustration 4.

Set "Lullaby" Knob as in Illustration 7.

---

(9)—To Turn Radio Off Automatically When Retiring and Awaken to Buzzer Alarm

Set Controls as in Illustration 5.

Set "Lullaby" Knob as in Illustration 7.

---

(10)—To Turn Radio Off Automatically When Retiring, Awaken to Music and Buzzer Alarm

Set Controls as in Illustration 6.

Set "Lullaby" Knob as in Illustration 7.

©John F. Rider

Compliments of www.nucow.com

MODEL 4-A-83,
Slumbertone

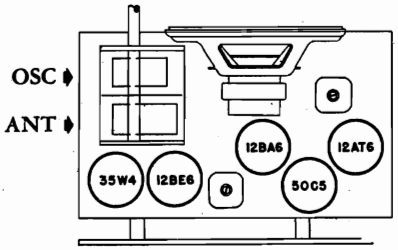

TUBE COMPLEMENT

12BE6 Converter
12BA6 I.F. Amplifier
12AT6 Det. AVC-AUDIO
50C5 Power Output
35W4 Rectifier

SERVICE DATA

ALIGNMENT PROCEDURE

- Output meter across voice coil (3.2 ohm)
- Volume control at maximum for all adjustments.
- Align for maximum output. Reduce input as needed to keep output near 1.28 volts (0.5 watt).

SIGNAL GENERATOR				*TUNER SETTING*	*ADJUST TRIMMERS TO MAXIMUM OUTPUT (in order shown)*
Frequency	*Coupling Capacitor*	*Connections to Receiver*	*Ground Connection*		
455 kc	0.1 mfd.	12BE6 grid	B—	Rotor full open (Plates out of mesh)	Input and output slugs of IF cans
1650 kc	0.1 mfd.	12BE6 grid	B—	Rotor full open (Plates out of mesh)	Oscillator trimmer A2
1500 kc		Radiating Loop		1500 kc	Antenna trimmer A1

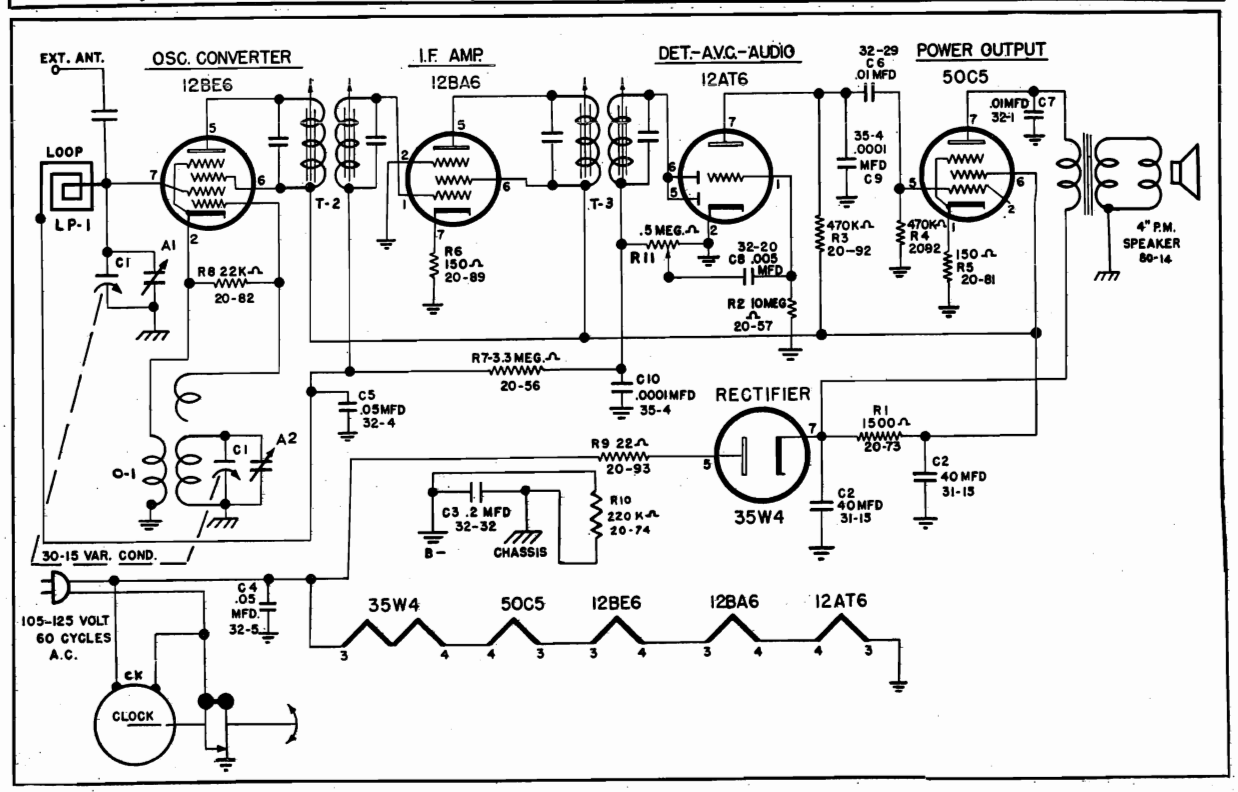

©John F. Rider

Compliments of www.nucow.com

MODEL 4-A-83, Slumbertone

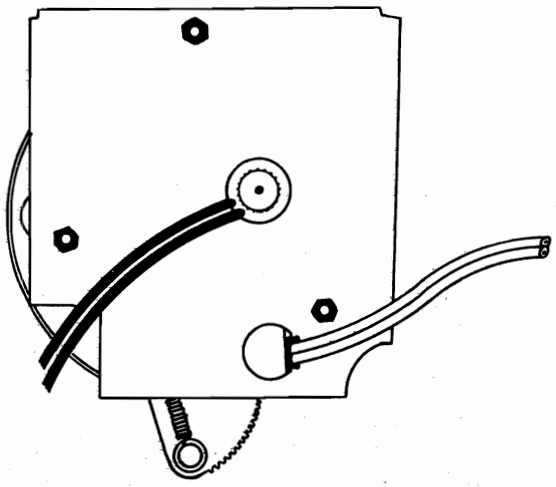

FIGURE A

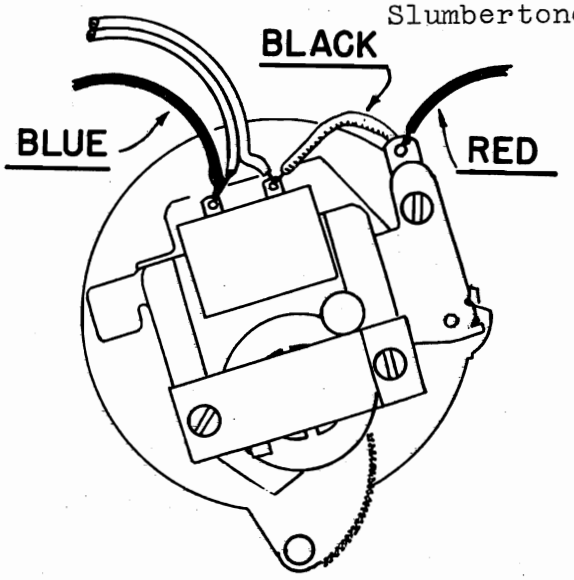

FIGURE B

To take clock movement out of cabinet proceed as follows:

Remove the following:

A—Line cord from power line.

B—Tuning knob, volume control knob, and chassis from cabinet.

C—3 nuts holding clock clamping shield shown in Figure A above.

D—As this shield is sufficiently pulled back unsolder red and blue wires and power cord shown in Figure B above.

E—Before movement can be withdrawn from cabinet, it is necessary to have the lullaby time switch in the full 60-minute position. With this switch in this position, the clock can be withdrawn by turning the rim clockwise approximately 5 to 10 degrees so that movement parts can pass openings in cabinet.

F—In shipping a movement to a service station, be certain that it is suitably packed to withstand transportation. Care should be taken with the glass crystal so that it is not subject to strain during shipment.

REPLACEMENT PARTS LIST

Ref. No.	*Part No.*	*DESCRIPTION*
		CAPACITORS
C1	30-15	Variable Condenser, 2 gang
C2	31-13	40 mfd.—40 mfd., 150 volt dual electrolytic condenser
C3	32-32	.2 mfd., 200 volt, paper
C4	32-5	.05 mfd., 400 volt, paper
C5	32-4	.05 mfd., 200 volt, paper
C6	32-1	.01 mfd., 400 volt, paper
C7	32-1	.01 mfd., 400 volt, paper
C8	32-20	.005 mfd., 600 volt, paper
C9	35-4	.0001 mfd., 500 volt, mica
C10	35-4	.0001 mfd., 500 volt, mica
		RESISTORS
R1	20-73	1500 ohm, 1 watt 20%
R2	20-57	10 megohm, ¼ watt 20%
R3	20-92	470,000 ohm, ¼ watt 20%
R4	20-92	470,000 ohm, ¼ watt 20%
R5	20-81	150 ohm, ½ watt 20%
R6	20-89	150 ohm, ¼ watt 20%
R7	20-56	3.3 megohm, ¼ watt 20%

Ref. No.	*Part No.*	*DESCRIPTION*
		RESISTORS — (Continued)
R8	20-82	22,000 ohm, ¼ watt 20%
R9	20-93	22 ohm, ½ watt 20%
R10	20-74	220,000 ohm, ¼ watt 20%
R11	50-15B	½ meg. volume control
		COILS AND TRANSFORMERS
O-1	60-9	Oscillator coil
T-2	61-11	Input IF transformer
T-3	61-11	Output IF transformer
LP-1	A125-32	Loop antenna
		MISCELLANEOUS
80-14	80-14	4 inch P.M. speaker with output transformer
	122-19	Selector knob
	122-15	Volume knob
	120-33Y	Cabinet—ivory (in carton)
CK	140-6	Clock

©John F. Rider

Compliments of www.nucow.com

MODELS 4-A-85, 4-A-89

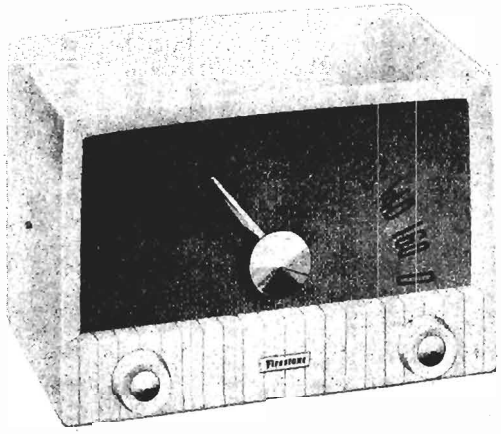

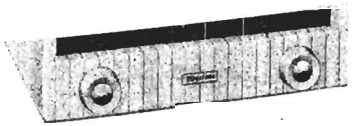

ON-OFF SWITCH AND VOLUME CONTROL

STATION SELECTOR

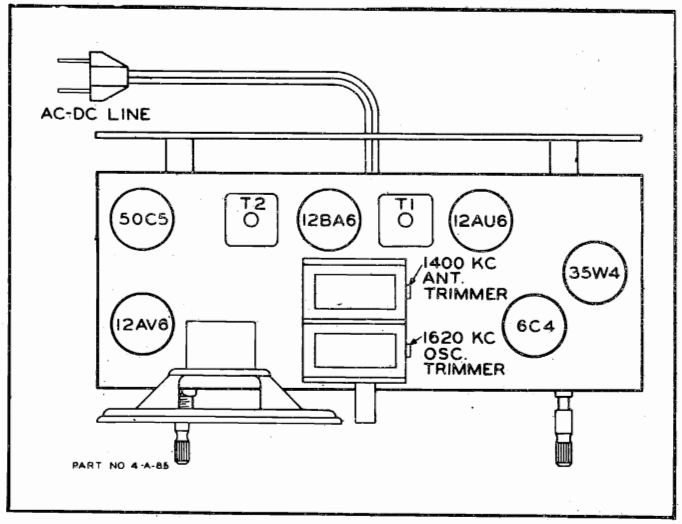

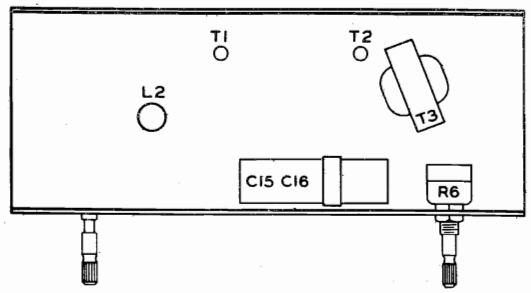

Cabinet Dimensions	-10-5/8"x5-3/4"x7-3/32"	Power Output	- Undistorted- 1.0 Watts
Weight	-7-1/2 Lbs.		Maximum - 1.9 Watts
Power Supply	-110 to 120 Volt AC-DC	Tube Complement-	12AU6 - Converter
Tuning Range	-535 to 1620 KC		12BA6 - I.F. Amplifier
Intermediate Freq.	-455 KC		12AV6 - Diode-Audio
Loud Speaker	-5 Inch P.M.		6C4 - Oscillator
Voice Coil Impedance	-3.2 Ohm at 400 Cycles		50C5 - Output
			35W4 - Rectifier

ALIGNMENT PROCEDURE

For alignment procedure read tabulations from left to right and make the adjustments marked (1) first, (2) next, (3) third.

Before starting alignment:

(A) Remove the chassis and loop antenna from the cabinet at the same time. To accomplish this, remove the two fasteners holding the top of the back to the cabinet and remove the two screws on the rear apron of the chassis which fasten the chassis to the cabinet.

(B) Use an accurately calibrated test oscillator with some type of output measuring device.

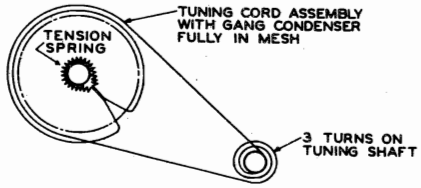

© John F. Rider

Compliments of www.nucow.com

Steps	Set Receiver dial to:	TEST OSCILLATOR		DUMMY ANTENNA	Refer to parts layout diagram for location of trimmers mentioned below:
		Adjust test oscillator frequency to:	Attach output of test oscillator to:		
1	Any point where no interfering signal is received.	EXACTLY 455 KC	High side to grid of 12AU6 Tube. Low side to common negative.	.05 MFD. CONDENSER.	Adjust slugs at top and bottom of 2nd I.F. (T2) and then each of the slugs of the 1st I.F. (T1) for max. output.
2	Exactly 1620 KC	Exactly 1620 KC	External Antenna blue lead on loop.	100 MMFD CONDENSR	Adjust 1620 KC oscillator trimmer for maximum output.
3	Approx. 1400 KC	Approx. 1400 KC	External Antenna blue lead on loop.	100 MMFD CONDENSR	Adjust 1400 KC antenna trimmer for maximum output.

Be sure R.F. and I.F. stages are accurately aligned before measuring gain. R.F. gains can be measured with a "channel" type instrument containing a tuned and calibrated R.F. amplifier. A vacuum tube voltmeter may be used for audio gain measurements. Observe following precautions:

1. For all gain measurements connect signal generator as shown. Use 600 KC. signal with 400 cycle modulation (use nearby frequency if local station interferes.)
2. Be sure radio is carefully tuned to generator signal (use weak signal for sharp tuning.)
3. When using a "channel type instrument carefully tune it for maximum output at desired frequency before making measurements.

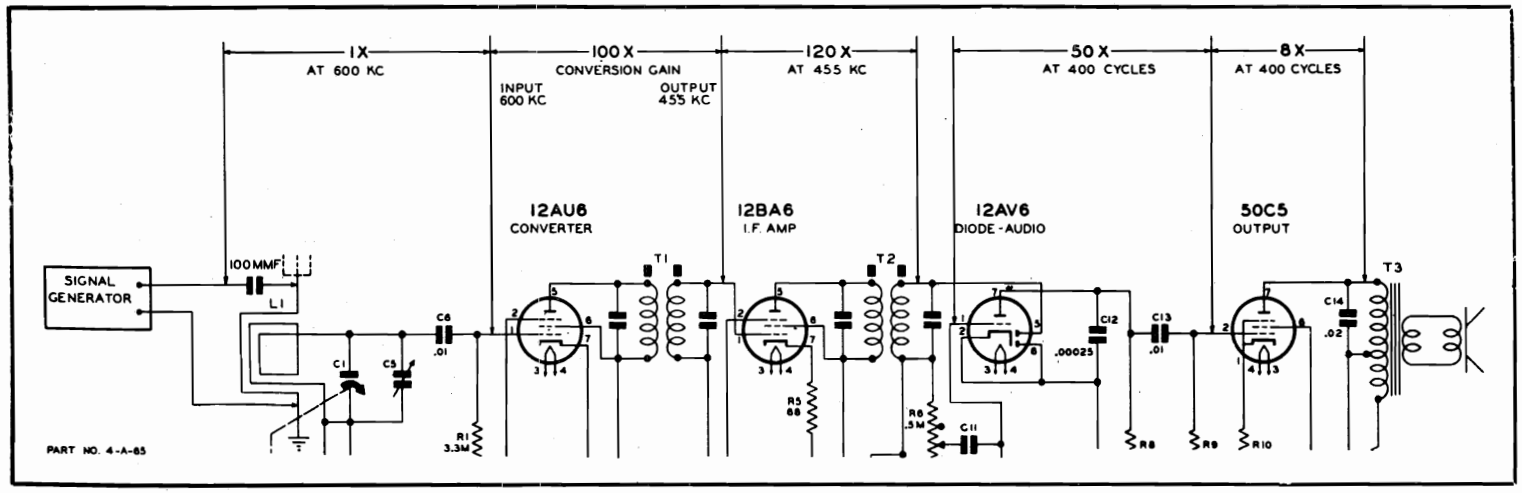

Differences in tube characteristics, tolerance of parts, adjustment of tuned circuits, and variations of line voltage will influence stage gain. Accuracy of measurements is dependent upon careful tuning of receiver to generator signal and experience in us your test exquipment. These factors may create considerable variation in gain measurements.

©John F. Rider
Compliments of www.nucow.com

MODELS 4-A-85, 4-A-89

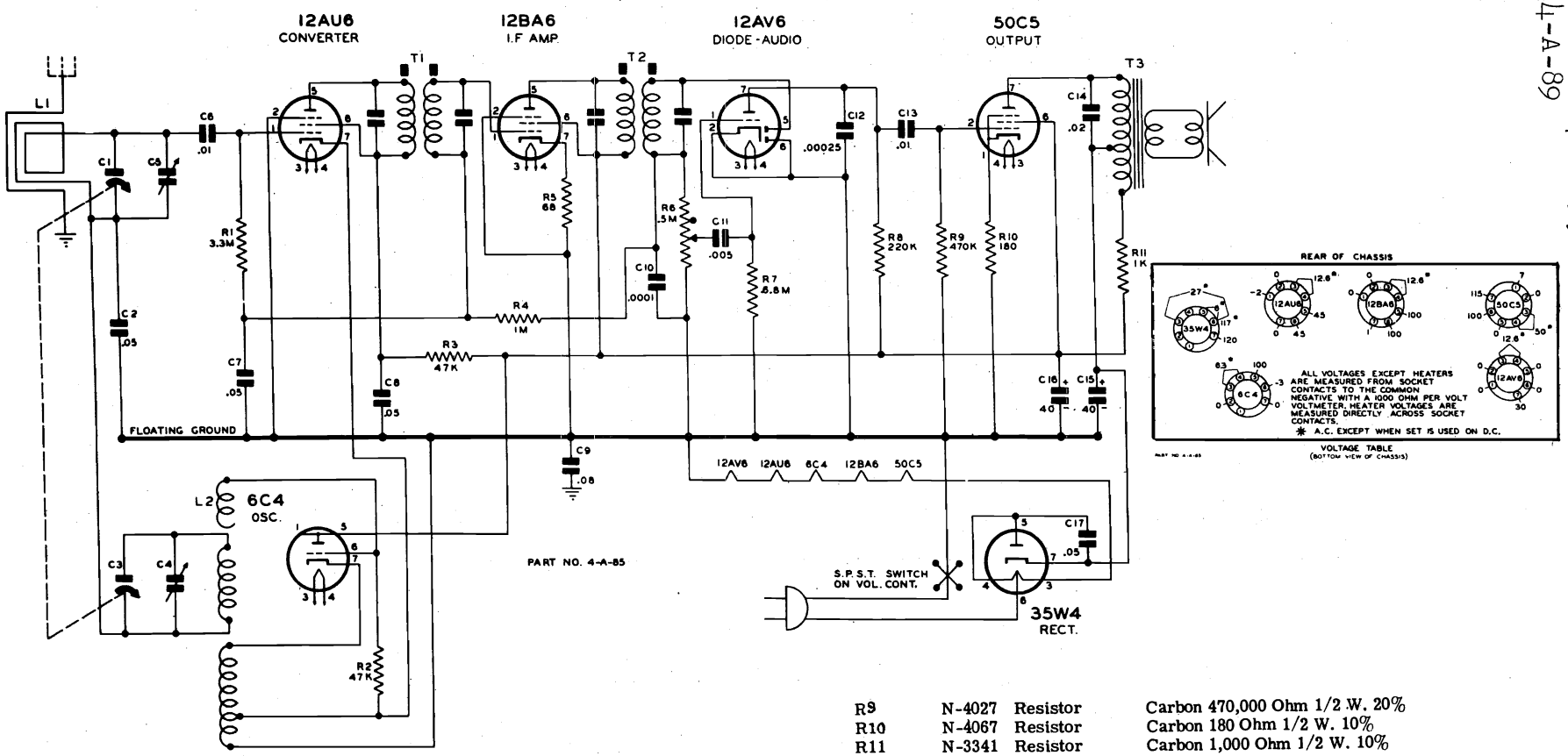

ILLUS. NO.	PART NUMBER	PART NAME	DESCRIPTION
C2,C7,C8	N-1345	Condenser	Paper .05 MFD. 200 V.
C6, C13	N-1344	Condenser	Paper .01 MFD. 400 V
C9	N-1351	Condenser	Paper .1 MFD. 200 V
C10	N-6015	Condenser	Ceramic 100 MMFD. 500 V. 20%
C11	N-4894	Condenser	Paper .005 MFD. 600 V.
C12	N-6488	Condenser	Ceramic 250 MMFD. 500 V. 20%
C14	N-1376	Condenser	Paper .02 MFD. 400V.
C15) C16)	N-5051	Condenser	Dry Electrolytic (40 MFD. 150 V. (40 MFD. 150 V.
C17	N-1346	Condenser	Paper .05 MFD. 400 V.
R1	N-4062	Resistor	Carbon 3.3 Megohm 1/2 W. 20%
R2, R3	N-4063	Resistor	Carbon 47,000 Ohm 1/2 W. 20%
R4	N-1262	Resistor	Carbon 1.0 Megohm 1/2 W. 20%
R5	N-6485	Resistor	Carbon 68 Ohm 1/2 W. 10%
R6	N-7984	Volume Control	500,000 Ohm with Switch
R7	N-4028	Resistor	Carbon 6.8 Megohm 1/2 W. 20%
R8	N-4026	Resistor	Carbon 220,000 Ohm 1/2 W. 20%
R9	N-4027	Resistor	Carbon 470,000 Ohm 1/2 W. 20%
R10	N-4067	Resistor	Carbon 180 Ohm 1/2 W. 10%
R11	N-3341	Resistor	Carbon 1,000 Ohm 1/2 W. 10%
L1	N-7964	Coil	Loop Antenna and Cabinet Back
L2	N-7982	Coil	Oscillator
T1, T2	N-7981	Coil	1st and 2nd I.F. Transformer
T3	N-8001	Transformer	Output
	N-7980	Speaker	5 inch P.M.
	N-8045	Assembly	Variable Gang Condenser & Pulley
	N-7992	Screen	Flocked Dial) For Stock No.
	N-7990	Knobs	Walnut Plastic) 4-A-85 Only
	# 313	Cabinet	Walnut Plastic)
	N-7991	Screen	Flocked Dial) For Stock No.
	N-7989	Knobs	White Plastic) 4-A-89
	# 312	Cabinet	White Plastic)
	N-7994	Pointer	Dial Indicator
	N-1090	Line Cord	6 Ft. Rubber

©John F. Rider

Compliments of www.nucow.com

MODEL 4-A-86,
Westmoreland

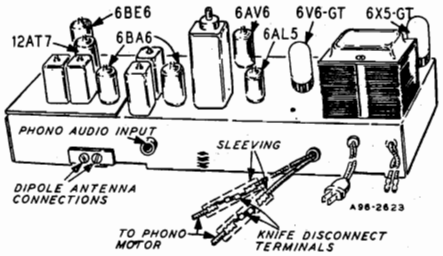

TUBE LAYOUT

ELECTRICAL SPECIFICATIONS

Power Supply .....105-125 volts AC 60 cycles, 40 watts. 60 watts with record changer.

Frequency Ranges ....Broadcast 540-1600 KC
Frequency Modulation 88-108 MC

Intermediate Frequency AM—455 KC
FM—10.7 MC

Selectivity .....AM—45 KC broad at 1000 times signal, measured at 1000 KC
I.F. FM—200 KC broad at 2 times down
I.F. FM—950 KC broad at 200 times down

AM Sensitivity .....(For .5 watt output with external antenna) 25 microvolts average

FM Sensitivity .....(For .5 watt output) 25 microvolts average

Power Output .....1.9 watts maximum
0.8 watts 10% distortion

Loud Speaker .....10" PM Dynamic

Voice Coil Impedance..3.2 ohms 400 cycles

Record Changer .....See Manual No. 199

Tube and Dial Lamp Complement
1 6BE6 AM Converter & FM Osc.
1 6BA6 1st I-F Amplifier
1 6BA6 2nd I-F Amplifier
1 6AL5 FM Discriminator
1 6AV6 Audio Amplifier, AM 2nd Detector and AVC
1 6V6GT Audio Output
1 6X5GT Rectifier
1 12AT7 R-F Amplifier & Mixer
2 No. 47 Dial Lamps

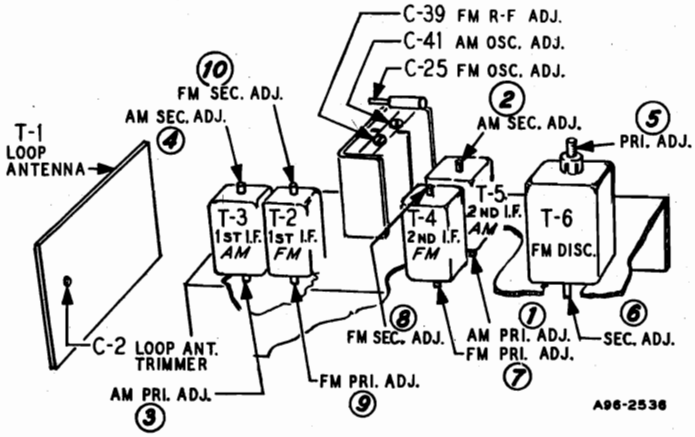

TRIMMER POSITIONS

DRIVE CORD REPLACEMENT

Replacement of the drive cord may be accomplished as shown in the illustration. For this purpose use the new drive cord assembly listed in the Replacement Parts List. Turn the gang condenser until the plates are fully meshed. Then install the string as shown, winding three turns clockwise around the tuning shaft with the turns progressing away from the chassis. After the cord is installed, rotate the tuning shaft several times in order to take up any slack in the cord.

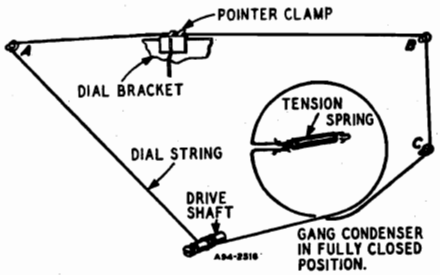

©John F. Rider

Compliments of www.nucow.com

MODEL 4-A-86,
Westmoreland

ALIGNMENT PROCEDURES

AM STAGES

The following is required for aligning:
An All Wave Signal Generator Which Will Provide an Accurately Calibrated Signal at the Test Frequencies as Listed.
Output Indicating Meter, Non-Metallic Screwdriver, Dummy Antennas — .1 mf, and 50mmf.

Volume Control Maximum all Adjustments.
Connect Radio Chassis to Ground Post of Signal Generator with a Short Heavy Lead.
Allow Chassis and Signal Generator to "Heat Up" for Several Minutes.

SIGNAL GENERATOR						
FREQUENCY SETTING	CONNECT GENERATOR OUTPUT TO	THROUGH DUMMY ANTENNA	CONNECT GROUND TO	GANG CONDENSER SETTING	ADJUST	ADJUST FOR
455 KC	Control Grid 1st 6BA6 Pin No. 1	.1 mf	Chassis Base	Rotor Fully Open	2nd I.F. Pri. (1) and Sec. (2)	Maximum Output
455 KC	Control Grid 6BE6 Pin No. 7 1st Det.	.1 mf	Chassis Base	Rotor Fully Open	1st I.F. Pri. (3) and Sec. (4)	Maximum Output
455 KC	Control Grid 6BE6 Pin No. 7	.1 mf	Chassis Base	Rotor Fully Open	2nd I-F Pri. (1) and Sec. (2)	Maximum Output
1620 KC	Control Grid 6BE6 Pin No. 7	.1 mf	Chassis Base	Rotor Fully Open	Oscillator C-41	Maximum Output
1400 KC	External Antenna Terminal	50 mmf	Chassis Base	Turn Rotor to Max. Output. Set Pointer to 1400 KC See Note A	Antenna C-2	Maximum Output

NOTE A—If the pointer is not at 1400 KC on the dial, reset pointer to the 1400 KC mark on the dial scale.

FM STAGES

The following is required for aligning:
An accurately calibrated signal generator providing unmodulated signals at the test frequencies listed below.
Non-metallic screwdriver.
Dummy Antennas and I-F Loading Resistor—2500 mmf, 300 ohms

Zero center scale DC vacuum tube voltmeter having a range of approximately 3 volts.
(If a zero center scale meter is not available, a standard scale vacuum tube voltmeter may be used by reversing the meter connections for negative readings).
Allow chassis and signal generator to "Heat Up" for several minutes.

SIGNAL GENERATOR							
	FREQUENCY SETTING	CONNECT GENERATOR OUTPUT TO	THROUGH DUMMY ANTENNA	BAND SWITCH SETTING	GANG CONDENSER SETTING	ADJUST	ADJUST FOR
Discriminator	10.7 MC	6BA6 2nd I-F Pin 1 and Chassis	2500 mmf	FM	Rotor Fully Open	Disc. Pri. (5) Note A	Maximum Deflection
	10.7 MC	6BA6 2nd I-F Pin 1 and Chassis	2500 mmf	FM	Rotor Fully Open	Disc. Sec. (6) Note B	
I-F	10.7 MC Note C	6BA6 1st I-F Pin 1 and Chassis	2500 mmf	FM	Rotor Fully Open	2nd I-F Pri. (7) Sec. (8) Note D	Maximum Deflection
Discriminator	10.7 MC	6BA6 1st I-F Pin 1 and Chassis	2500 mmf	FM	Rotor Fully Open	Disc. Pri. (5) Note D	Maximum Deflection
I-F	10.7 MC	Junction C-32A & B (Dual 100 mmf cond.) And chassis	2500 mmf	FM	Rotor Fully Open	1st I-F Pri. (9) & Sec. (10) 2nd I-F Pri. (7) & Sec. (8) Disc. Pri. (5) In Order Shown Note D	Maximum Deflection
	10.7 MC	Same as above	2500 mmf	FM	Rotor Fully Open	Disc. Sec. (6) Note B	
RECHECK I-F ADJUSTMENTS IN ORDER GIVEN							
Oscillator	108.5	Disconnect built-in dipole antenna and connect generator to dipole terminals with resistor in series.	300 ohms	FM	Rotor Fully Open	Osc. C-25	Maximum Deflection
Antenna	104.5	Same as above	300 ohms	FM	Tune rotor for max. AVC voltage	Ant. C-39	Maximum Deflection
RECHECK ANTENNA & OSC. ADJUSTMENTS IN ORDER GIVEN							

FM ALIGNMENT NOTES

NOTE A—The zero center scale DC vacuum tube voltmeter is to be connected between chassis ground and the AVC line. A signal of .1 volt must be fed into the receiver for this adjustment.
Note output voltage on the zero center DC vacuum tube voltmeter.

NOTE B—Disconnect zero center DC vacuum tube voltmeter from AVC and connect it at the audio takeoff point at the 27 K ohm resistor (R-10) and its junction with the terminal strip. Adjust for zero voltage indication.

NOTE C—AM I-F coils must be aligned before attempting to align the FM I-F coils.

NOTE D—Connect zero center DC vacuum tube voltmeter as in Note A. Adjust input to give same output on the zero center DC vacuum tube voltmeter as in Note A.

©John F. Rider

Compliments of www.nucow.com

MODEL 4-A-86,
Westmoreland

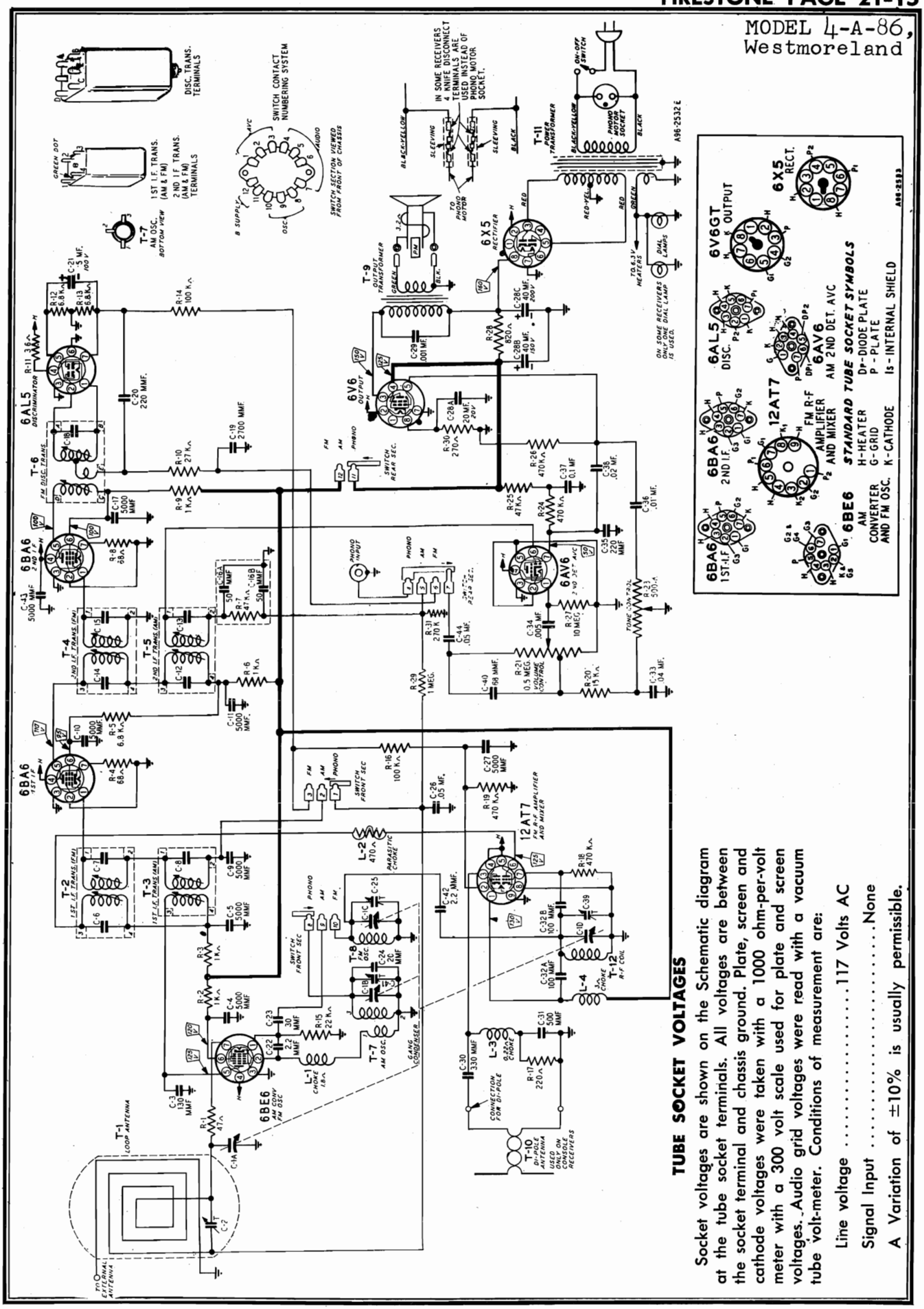

TUBE SOCKET VOLTAGES

Socket voltages are shown on the Schematic diagram at the tube socket terminals. All voltages are between the socket terminal and chassis ground. Plate, screen and cathode voltages were taken with a 1000 ohm-per-volt meter with a 300 volt scale used for plate and screen voltages. Audio grid voltages were read with a vacuum tube volt-meter. Conditions of measurement are:

Line voltage .....117 Volts AC

Signal Input .....None

A Variation of ±10% is usually permissible.

©John F. Rider

Compliments of www.nucow.com

MODEL 4-A-86,
Westmoreland

REPLACEMENT PARTS LIST

MISCELLANEOUS

12A480	10" P.M. Speaker
4X1082	Escutcheon
10A759	Knob
13X546	Line Cord & Plug Assembly
2A393	Band Change Switch
3A435	Molded Octal Tube Socket
3A305	Phono Socket
3A426	Tube Socket (1st 6BA6)
3A443	Tube Socket (12AT7)
3A427	Tube Socket (6BE6)
3A439	Tube Socket (Miniature)

CAPACITORS

C-1	14A209	Gang Condenser Assembly		
C-2	17A256	2-24 mmf		Trimmer
C-3	47X559	130 mmf		Ceramic
C-4, C-5, C-9, C-10, C-11, C-17, C-27, C-43	47X507	5000 mmf		Ceramic
C-6, C-7	Part of T-2 (1st I-F Trans. FM)			
C-8	Part of T-3 (1st I-F Trans. AM)			
C-12, C-13	Part of T-5 (2nd I-F Trans. AM)			
C-14, C-15	Part of T-4 (2nd I-F Trans. FM)			
C-16A, C-16B	47X112	50-50 mmf		Dual Mica
C-18	Part of T-6 (Discriminator Trans.)			
C-19	47X492	2700 mmf		Molded Mica
C-20, C-35	47X468	220 mmf		Ceramic
C-21	45X361	5 mf	100 V	Dry Electrolytic
C-22, C-42	47X557	2.2 mmf		Ceramic
C-23	47X558	30 mmf		Ceramic
C-24	47X516	20 mmf		Ceramic
C-25	17A255	1.8 mmf		Trimmer
C-26, C-44	B66503	.05 mf	200 V	Tubular
C-28A		20 mf	20 V	
C-28B	45X360	40 mf	150 V	Dry Electrolytic
C-28C		40 mf	200 V	
C-29	H66102	.001 mf	800 V	Tubular
C-30	47X470	330 mmf		Molded Mica
C-31	47X508	500 mmf		Ceramic
C-32A, C-32B	76X4	100 mmf		Dual Ceramic
C-33	B66403	.04 mf	200 V	Tubular
C-34	D66502	.005 mf	400 V	Tubular
C-36	B66103	.01 mf	200 V	Tubular
C-37	D66104	.1 mf	400 V	Tubular
C-38	D66203	.02 mf	400 V	Tubular
C-39, C-41	Part of C-1 (Gang Condenser)			
C-40	47X471	68 mmf		Ceramic

RESISTORS

		Ohms	Watts	
R-1	B85470	47	0.5	Carbon
R-2, R-3, R-6, R-9	B85102	1000	0.5	Carbon
R-4, R-8	B84680	68	0.5	Carbon
R-5, R-12, R-13	B84682	6800	0.5	Carbon
R-7, R-25	B85473	47 K	0.5	Carbon
R-10	B85273	27 K	0.5	Carbon
R-11	43X233	3.6	0.5	Wirewound
R-14, R-16	B85104	100 K	0.5	Carbon
R-15	B85223	22 K	0.5	Carbon
R-17	B84221	220	0.5	Carbon
R-18, R-19, R-24, R-26	B85474	470 K	0.5	Carbon
R-20	B85153	15 K	0.5	Carbon
R-21	36X372	.5 meg.		Volume Control
R-23	40X310	.5 meg.		Tone Control
R-27	B85106	10 meg.	0.5	Carbon
R-28	D84821	820	2.0	Carbon
R-29	B85105	1 meg.	0.5	Carbon
R-30	B84271	270	0.5	Carbon
R-31	B84274	270 K	0.5	Carbon

TRANSFORMERS AND COILS

L-1	35A5	Insulated Choke
L-2	9A2103	Parasitic Choke
L-3	35A9	Insulated Choke
L-4	35A8	Insulated Choke
T-1	9A2146	"B" Range Loop Antenna
T-2	9A2060	1st I-F Trans. (FM)
T-3	9A2062	1st I-F Trans. (AM)
T-4	9A2061	2nd I-F Trans. (FM)
T-5	9A2063	2nd I-F Trans. (AM)
T-6	9A2064	Discriminator Transformer
T-7	9A2065	Oscillator Coil (AM)
T-8	9A2067	Oscillator Coil (FM)
T-9	51X134	Output Transformer
T-10	9A2004	Dipole Antenna
T-11	53X291	Power Transformer
T-12	9A2066	Antenna Coil (FM)

DIAL AND DRIVE ASSEMBLY

58X739	Dial Glass
15X251	Pointer
19X192	"C" Washer (Mtg. Drive Shaft)
6X66	Rubber Grommet
25X1616	Dial Bracket
28X113	Drive Cord Tension Spring
7A103	No. 47 Pilot Light
7A199	Pilot Light Socket Assembly
10X38	Drive Cord Assembly
26X486	Drive Shaft

VM No. 950 RECORD CHANGER PARTS

P-81	Crystal Cartridge with Unipoint Needle
85-35	Unipoint Needle
P-77	Crystal Cartridge with Needles
85-18	Needle, Microgroove (Red)
85-16	Needle, Regular

©John F. Rider

Compliments of www.nucow.com

MODEL 4-A-87,
Waverly

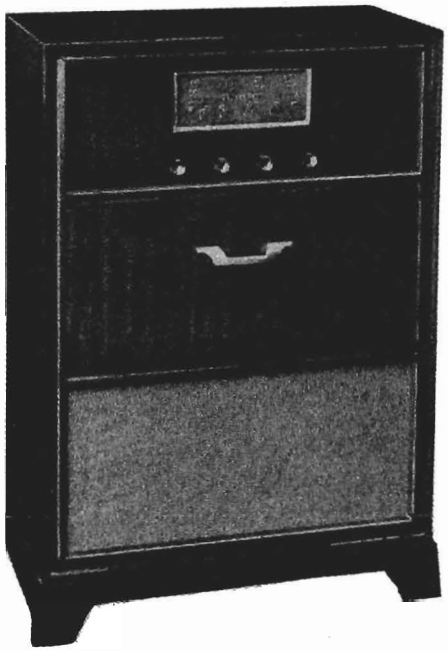

DRIVE CORD REPLACEMENT

DIAL POINTER CORD

Use a new S-10X77 drive cord assembly or a new length of cord 48 inches long for the installation. Install the cord as shown in the illustration, winding three turns counterclockwise around the drive shaft with the turns progressing away from the chassis. After completing the installation rotate the drive shaft a few turns to take up the slack in the cord.

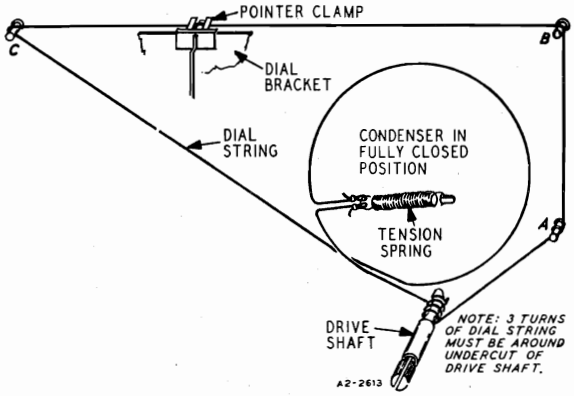

ELECTRICAL SPECIFICATIONS

6 Tube Superheterodyne, including Rectifier Tube.
Tuning Frequency Range.....540 to 1600 KC
Power Consumption....(Radio) 35 watts (At 117 volts AC)
(Phono) 20 watts, 60 cycles only
Power Output 2.0 watt maximum, 1.1 watt (10% distortion)
Intermediate Frequency .....455 KC
Sensitivity .....10 Microvolts Average
Selectivity .....45 KC Wide at 1000 Times Signal
Speaker .....(3.2 ohm Voice Coil) 8" PM Dynamic

Tube and Dial Lamp Complement
1 6BA6 R-F Amplifier
1 6BE6 Converter
1 6BA6 I-F Amplifier
1 6AV6 Det. & 1st Audio
1 6AQ5 Output
1 6X4 Rectifier
1 No. 47 Dial Lamp

ALIGNMENT PROCEDURE

The following is required for aligning:
An All Wave Signal Generator Which Will Provide an Accurately Calibrated Signal at the Test Frequencies as Listed.
Output Indicating Meter, Non-Metallic Screwdriver, Dummy Antennas, — .1 mf, and 50 mmf.

Volume Control Maximum all Adjustments.
Connect Radio Chassis to Ground Post of Signal Generator with a Short Heavy Lead.
Allow Chassis and Signal Generator to "Heat Up" for Several Minutes.

SIGNAL GENERATOR						
FREQUENCY SETTING	CONNECT GENERATOR OUTPUT TO	THROUGH DUMMY ANTENNA	CONNECT GROUND TO	GANG CONDENSER SETTING	ADJUST	ADJUST FOR
455 KC	Control Grid I-F 6BA6 Pin No. 1	.1 mf	Chassis Base	Rotor Fully Open	2nd I.F. Pri. (1) and Sec. (2)	Maximum Output
455 KC	Control Grid 6BE6 Pin No. 7 1st Det.	.1 mf	Chassis Base	Rotor Fully Open	1st I.F. Pri. (4) and Sec. (3)	Maximum Output
455 KC	Control Grid 6BE6 Pin No. 7	.1 mf	Chassis Base	Rotor Fully Open	2nd I.F. Pri. (1) and Sec. (2)	Maximum Output
1620 KC	Control Grid 6BE6 Pin No. 7	.1 mf	Chassis Base	Rotor Fully Open	Oscillator C-8	Maximum Output
1400 KC	Control Grid R-F 6BA6 Pin No. 1	.1 mf	Chassis Base	Turn Rotor to Max. Output. Set Pointer to 1400 KC See Note A	Interstage C-6 See Note B	Maximum Output
1400 KC	External Antenna Terminal	50 mmf	Chassis Base	Turn Rotor to Max. Output. Set Pointer to 1400 KC See Note A	Antenna C-2 See Note B	Maximum Output

NOTE A—If the pointer is not at 1400 KC on the dial, reset pointer to the 1400 KC mark on the dial scale.
NOTE B—Turn the rotor back and forth and adjust the trimmer until the peak of greatest intensity is obtained.

©John F. Rider

Compliments of www.nucow.com

MODEL 4-A-87,
Waverly

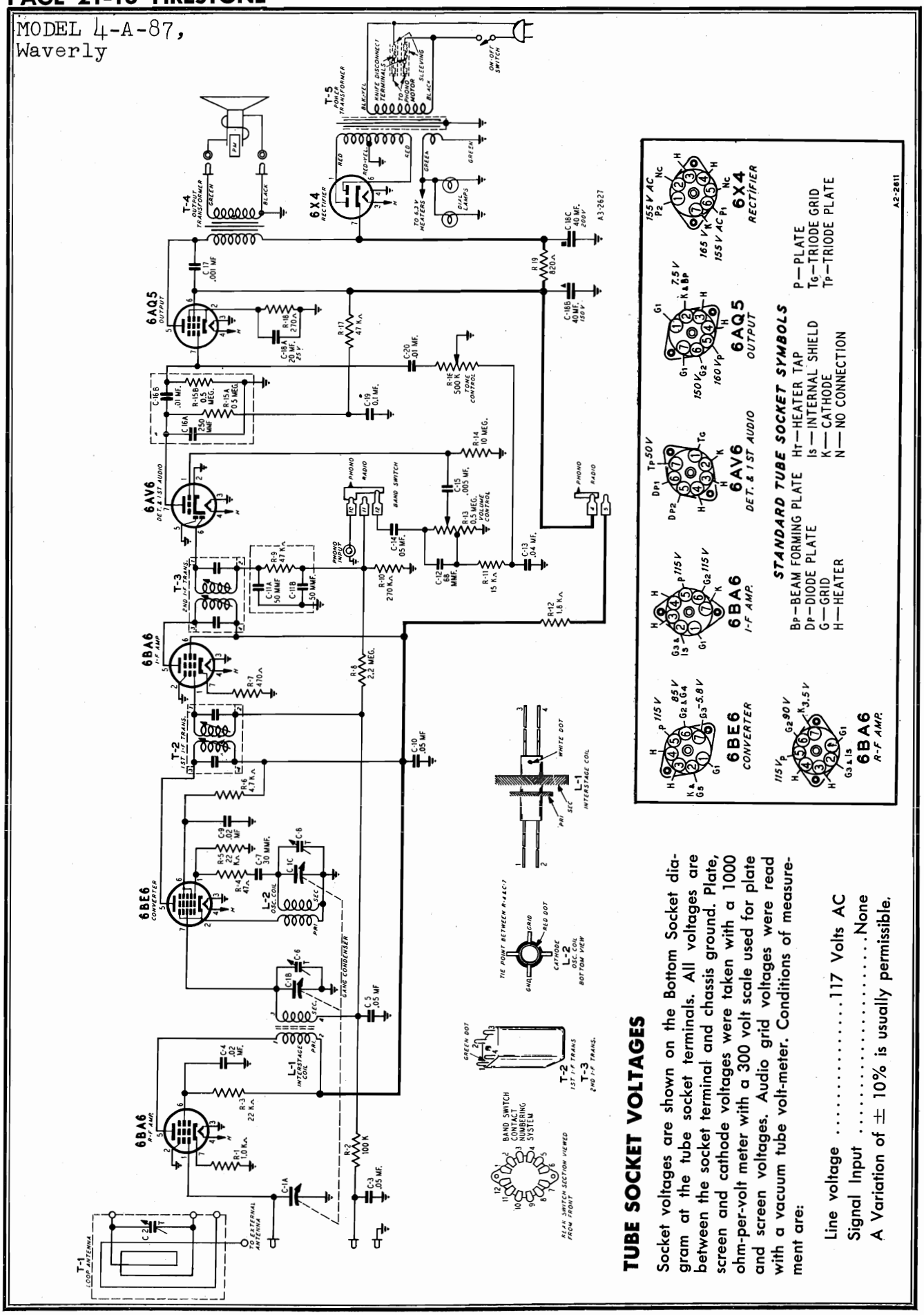

TUBE SOCKET VOLTAGES

Socket voltages are shown on the Bottom Socket diagram at the tube socket terminals. All voltages are between the socket terminal and chassis ground. Plate, screen and cathode voltages were taken with a 1000 ohm-per-volt meter with a 300 volt scale used for plate and screen voltages. Audio grid voltages were read with a vacuum tube volt-meter. Conditions of measurement are:

Line voltage .....117 Volts AC
Signal Input .....None
A Variation of ± 10% is usually permissible.

©John F. Rider

Compliments of www.nucow.com

MODEL 4-A-87,
Waverly

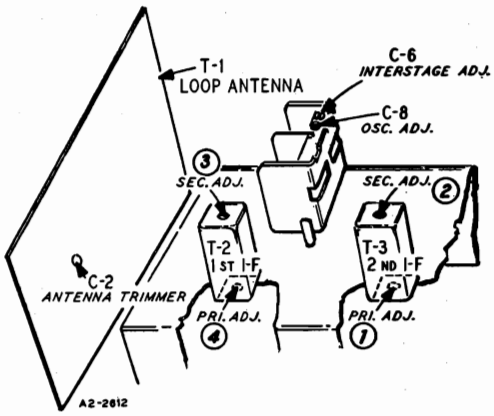

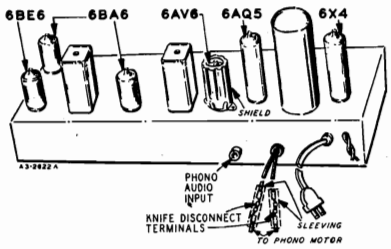

REPLACEMENT PARTS LIST

MISCELLANEOUS

12A477	8" P.M. Speaker	
10A759	Knobs	
4X1082	Escutcheon	
2A405	Radio-Phono Switch	
13X546	Line Cord & Plug Assembly	
3A458	Tube Socket (6AV6)	
3A426	Tube Socket (miniature)	
30X560	Line Cord Clamp	
3A305	Phono Socket	
32X403	Tube Shield (6AV6)	
76X1	Capacitor-Resistor Combination	
76X5	Capacitor-Resistor Combination	

CAPACITORS

C-1A, C-1B, C-1C	14A213	Gang Condenser Assembly		
C-2	17A235	2-24 mmf		Trimmer
C-3, C-5, C-10	B66503	.05 mf	200 V	Tubular
C-4, C-9	B66203	.02 mf	200 V	Tubular
C-6, C-8	Part of Gang Condenser Assembly			
C-7	47X558	30 mmf		Ceramic
C-11A, C-11B	Part of 76X1 Assembly (See Miscellaneous)			
C-12	47X471	68 mmf		Ceramic
C-13	B66403	.04 mf	200 V	Tubular
C-14	B65503	.05 mf	200 V	Tubular
C-15	D66502	.005 mf	400 V	Tubular
C-16A, C-16B	Part of 76X5 Assembly (See Miscellaneous)			
C-17	F66102	.001 mf	600 V	Tubular
C-18A	45X381	20 mf	25 V	Dry Electrolytic
C-18B		40 mf	150 V	
C-18C		40 mf	200 V	
C-19	B66104	.1 mf	200 V	Tubular
C-20	B66103	.01 mf	200 V	Tubular

RESISTORS

		Ohms	Watts	
R-1	B84102	1K	0.5	Carbon
R-2	B85104	100K	0.5	Carbon
R-3, R-5	B85223	22K	0.5	Carbon
R-4	B85470	47	0.5	Carbon
R-6	B84472	4.7K	0.5	Carbon
R-7	B84471	470	0.5	Carbon
R-8	B85225	2.2 meg.	0.5	Carbon
R-9	Part of 76X1 Assembly (See Miscellaneous)			
R-10	B84274	270K	0.5	Carbon
R-11	B84153	15K	0.5	Carbon
R-12	C84182	1.8K	1.0	Carbon
R-13	36X372	.5 meg.		Volume Control
R-14	B85106	10 meg.	0.5	Carbon
R-15A, R-15B	Part of 76X5 Assembly (See Miscellaneous)			
R-16	40X310	.5 meg.		Tone Control
R-17	B85473	47K	0.5	Carbon
R-18	B84271	270	0.5	Carbon
R-19	D84821	820	2.0	Carbon

TRANSFORMERS AND COILS

L-1	9A2117	Interstage Coil
L-2	9A2113	Oscillator Coil
T-1	9A2152	Loop Antenna
T-2	9A2112	1st I-F Trans.
T-3	9A2063	2nd I-F Trans.
T-4	51X134	Output Trans.
T-5	53X291	Power Trans.

DIAL AND DRIVE ASSEMBLY

S-10X77	Drive Cord Assembly
15X251	Pointer
25X1616	Dial Bracket
58X740	Dial Glass
26X515	Drive Shaft
7A199	Pilot Light Socket Assembly
28X113	Drive Cord Tension Spring
41X88	Dial Light Reflector
7A103	No. 47 Dial Light
19X192	"C" Washer (Mtg. Drive Shaft)

VM No. 950 RECORD CHANGER PARTS

P-81	Crystal Cartridge with Unipoint Needle
85-35	Unipoint Needle
P-77	Crystal Cartridge with Needles
85-18	Needle, Microgroove (Red)
85-16	Needle, Regular

©John F. Rider

Compliments of www.nucow.com

MODEL 4-B-57,
Chevrolet, 1949-1950

DESCRIPTION

Your new Automobile Receiver is a 6-tube (including rectifier) superhetrodyne, designed to operate from the 6-volt storage battery in your car. It is custom-built to mount behind the instrument panel in the place provided for a radio by the automobile manufacturer. It features a novel two-piece construction and covers the frequency range 538 to 1600 KC. Two simple controls are provided for operating the receiver.

This receiver has been designed with a tuned RF stage and a 3-gang tuning condenser thereby insuring the finest in sensitivity and selectivity. For best results we recommend Firestone Disappearing Fenderwell Aerial Stock No. 4-B-21. The unit is simple to install and requires no electrical adjustment after installation.

INSTALLATION

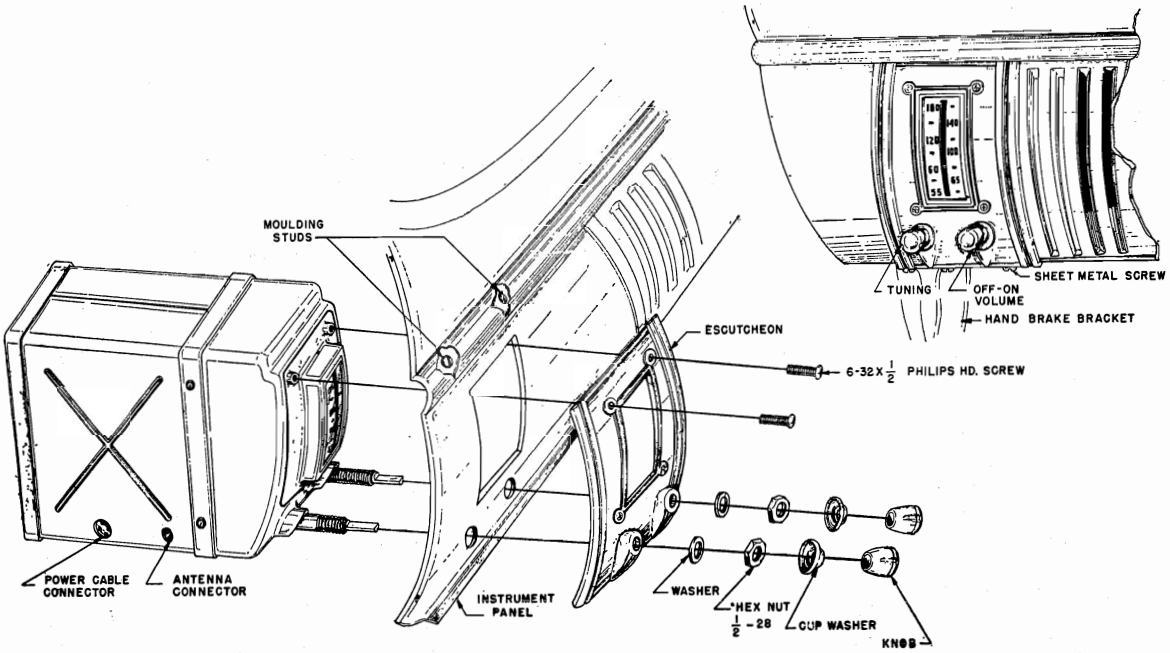

R.F. TUNING UNIT DETAIL MOUNTING ASSEMBLY

Fig. 1

R. F. TUNING UNIT

1. Loosen nuts on the two moulding studs located behind the instrument panel cover plate.
2. Remove sheet metal screw from the lower edge of the instrument panel cover plate and the two screws and washers attaching the hand brake to the instrument panel. Keep these parts.
3. Remove instrument panel cover plate and discard.
4. Tighten nuts on the two moulding studs located behind the instrument panel cover plate.
5. Drop vent controls by removing screws, lockwashers, and flat washers securing these controls to the instrument panel. This will facilitate installation of both receiver units. Save parts removed.
6. Install R.F. Tuning Unit behind instrument panel so that mounting bushings and tuning shafts protrude through the instrument panel.
7. Slide plastic escutcheon over mounting bushings and secure with flat washers, nuts, cup washers, and knobs as shown in Fig. 1
8. Secure top part of plastic escutcheon to R.F. Tuning Unit with two No. 6-32 x ½" long Philips Head screws.

POWER SUPPLY UNIT

1. Insert a thin blade screwdriver or a flat strip of metal through the Radio Grille and slit fiberboard Radio Grille screen. Reach in back of Radio Grille and remove screen by grasping slit edge. Discard fiberboard screen.
2. Remove 10-32 nuts and washers from the moulding studs behind the Radio Grille.
3. Remove 10-32 nuts, screws, and washers securing the lower tabs of the Radio Grille to the instrument panel.
4. Install Power Supply Unit behind Radio Grille and position into place so that holes in top of unit slide over moulding studs as shown in Fig. 2.

NOTE: It may be more convenient, in car models with air conditioner heaters, to remove the vibrator before installing this unit. The vibrator can be replaced after the power unit is mounted.

©John F. Rider

Compliments of www.nucow.com

MODEL 4-B-57,
Chevrolet, 1949-1950

5. Replace 10-32 nuts and washers on moulding studs.
6. Replace lower grille tab 10-32 mounting screws, nuts, and washers so that screws secure the lower grille tabs and Power Supply Unit to the instrument panel.
7. Connect cable from Power Supply Unit to R.F. Tuning Unit.
8. Secure Power Supply Cable under clamp on R.F. Tuning Unit.
9. Replace vent controls.
10. Replace screws and washers securing hand brake.

Connect battery lead to terminal on Ignition Switch.

Plug Antenna cable into receiver.

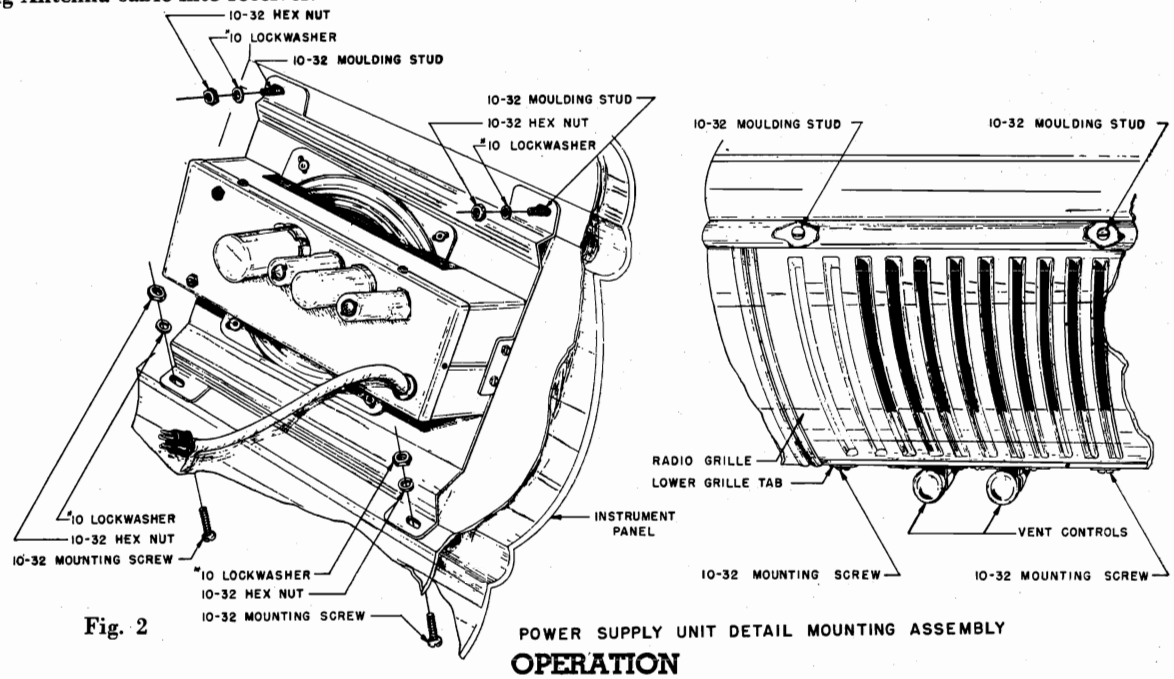

Fig. 2

POWER SUPPLY UNIT DETAIL MOUNTING ASSEMBLY

OPERATION

VOLUME CONTROL KNOB

This knob is located on the right side of the radio. Turning this knob slightly to the right until a slight click is heard will put the radio into operation. Turning this knob further to the right will increase the volume and turning it to the left will decrease the volume. After a station has been selected, the volume control should be adjusted to the desired level. The volume should never be reduced by detuning the station selector knob.

STATION SELECTOR KNOB

This knob is located on the left side of the radio. This knob should be turned until a desired station has been selected. Adjust this knob very carefully until the station comes in with the most natural tone.

SUPPRESSION KIT MOTOR NOISE ELIMINATION

A suppression kit is shipped with this receiver. It contains the following parts:

1 Generator Condenser.
1 Distributor Suppressor.

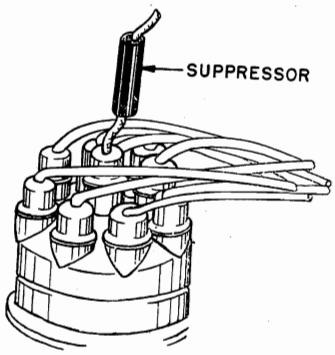

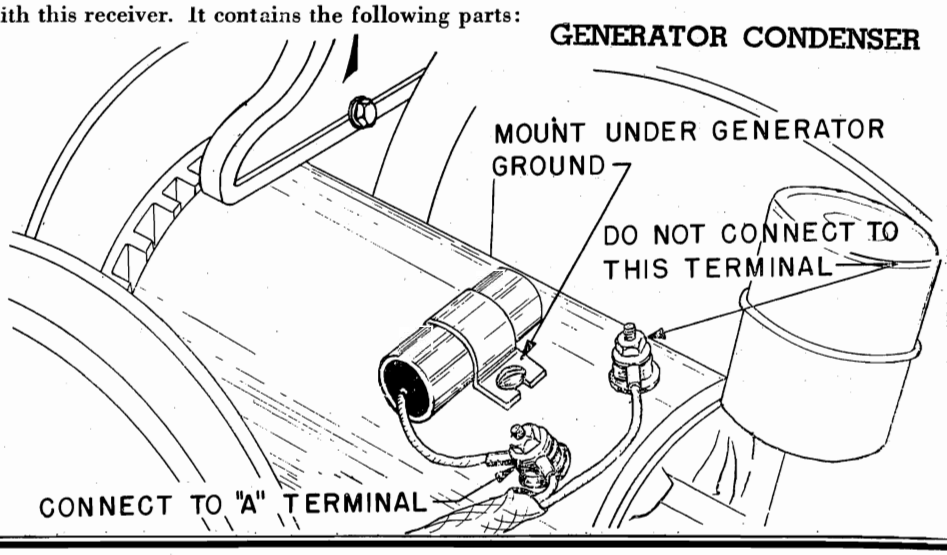

Fig. 3

©John F. Rider

Compliments of www.nucow.com

MODEL 4-B-57,
Chevrolet, 1949-1950

DISTRIBUTOR SUPPRESSOR

Disconnect the center lead in the distributor head of the motor. Cut lead approximately 2 inches back from metal tip end. Screw suppressor into cut end of long lead. Screw cut end of short lead into suppressor. Plug lead, with attached suppressor, back into distributor head.

The generator condenser and distributor suppressor will normally eliminate all objectionable motor noise. If the motor noise persists, a .5 MFD by-pass condenser may be connected to either side of the ammeter with the ground lug fastened to a good ground nearby.

WHEEL STATIC

Wheel static is a form of interference caused by the rotation of the front wheels of the car, and it is, of course, only noticed when the car is in motion. If this form of interference is present, it can be eliminated by installing wheel static collector springs between the inner hub cap and the spindle shaft.

ELECTRICAL ACCESSORIES

In some cases, it may be found that car accessories such as electric heaters, lighters, automatic relays or gauges, may cause interference while in operation. Proper procedure in such cases is to connect a .5 MFD by-pass condenser from ground to the suspected accessory until the source of interference is found. The condenser then should be permanently mounted in this location.

SERVICE DATA

ELECTRICAL SPECIFICATIONS

Power Supply	6.3 Volts DC
Current	5.5 Amp. average
Frequency Range	538-1600 KC
Speaker	5¼" PM
Power Output	2 watts, undistorted
	3 watts, maximum
Sensitivity	2-3 microvolts average for 1 watt output
Selectivity	40 KC broad at 1000 times signal, at 1000 KC

This receiver contains the following:
1—6BA6—RF Amplifier
1—6BE6—Converter
1—6BA6—I. F. Amplifier
1—6AT6—Detector—AVC—1st Audio
1—6AQ5—Power Output
1—6X4—Rectifier

SERVICE NOTES

Voltage taken from the different points of the circuit to the chassis are measured with volume control in maximum position, all tubes in their sockets, no signal applied, and with a volt meter having a resistance of 20,000 Ohms per volt. These voltages are clearly shown on the voltage chart, (Fig. 5).
All voltages should be measured with an input voltage of 6.3 volts DC.
To check for open by-pass condensers, shunt each condenser with another one having the same capacity and voltage rating which is known to be good until the defective unit is located.

ALIGNING INSTRUCTION

Never attempt any adjustments on this receiver unless it becomes necessary to replace a coil or transformer, or the adjustments have been tampered with in the field. Always make certain that other circuit components such as tubes, condensers, resistors, etc. are normal before proceeding with realignment.

If realignment is necessary follow the instructions given under the heading "Alignment Procedure". After realignment has been completed repeat the procedure as final check.

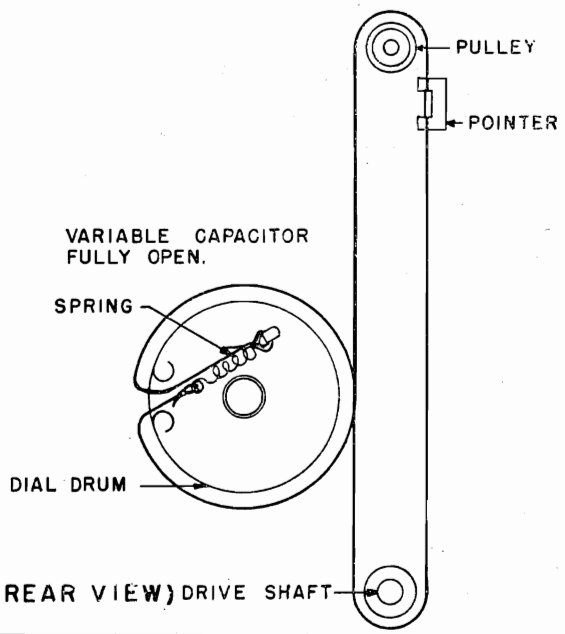

Fig. 4 DIAL CORD DRIVE (REAR VIEW)

© John F. Rider

Compliments of www.nucow.com

MODEL 4-B-57,
Chevrolet, 1949-1950

ALIGNMENT PROCEDURE

Volume control—Maximum, all adjustments.
No signal applied to antenna.
Power input—6.3 volts.
Connect dummy antenna in series with output lead of signal generator.
Connect ground lead of signal generator to chassis.
Repeat alignment procedure as a final check.

The following equipment is necessary for proper alignment:
Signal generator that will provide the test frequencies as listed, modulated 400 cycles, 30%.
Non-metallic screwdriver.
Output meter. (1.8 volt for 1 watt output.)
Dummy antennas—.1 MFD., 100 MMFD.
For alignment points refer to Schematic Diagram.

Dial Setting	*Generator Frequency*	*Dummy Ant.*	*Generator Connection*	*Trimmer Reference*	*Trimmer Adjustment*	*Trimmer Function*
1) Fully open	455 KC	.1 MFD	6BE6 Grid	T2 Top & bottom	Maximum	Output I.F.
2) Fully open	455 KC	.1 MFD	6BE6 Grid	T1 Top & bottom	Maximum	Input I.F.
3) Fully open	1600 KC	100 MMFD	Ant. lead	CV2	Maximum	Oscillator
4) Tune in signal from generator	1400 KC	100 MMFD	Ant. lead	CV3	Maximum	RF Stage
5) Tune in signal from generator	1400 KC	100 MMFD	Ant. lead	CV1	Maximum	Antenna
6) Tune in signal from generator	600 KC	100 MMFD	Ant. lead	L3	Maximum	RF Stage
7) Tune in Signal from generator	600 KC	100 MMFD	Ant. lead	L2	Maximum	Antenna

8) Repeat steps 4 and 5

BOTTOM VIEW OF CHASSIS

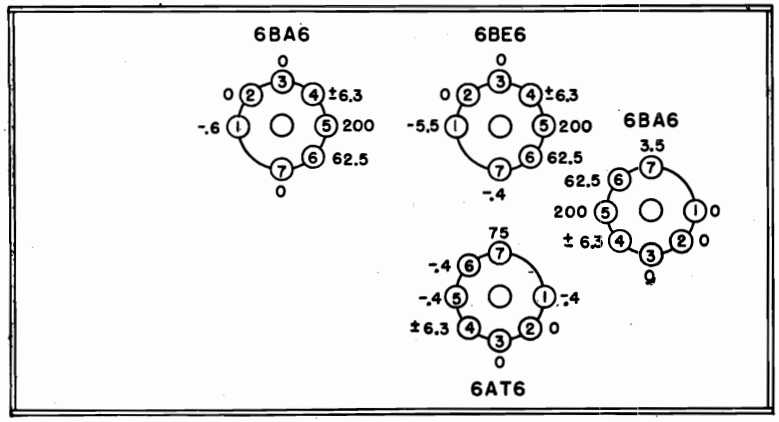

BOTTOM VIEW OF POWER PACK

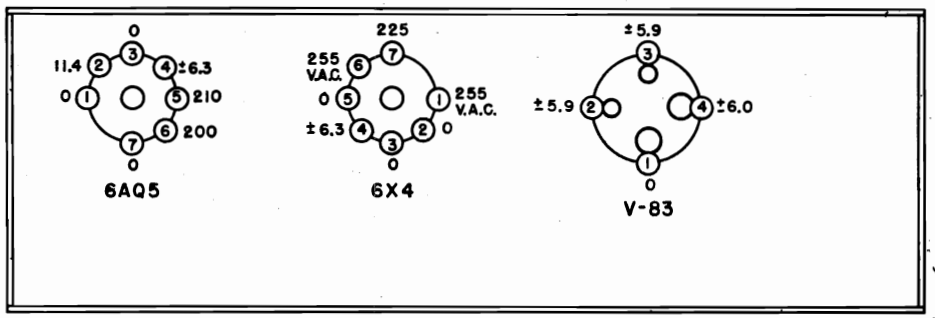

Fig. 5

SOCKET VOLTAGES

©John F. Rider

Compliments of www.nucow.com

MODEL 4-B-57

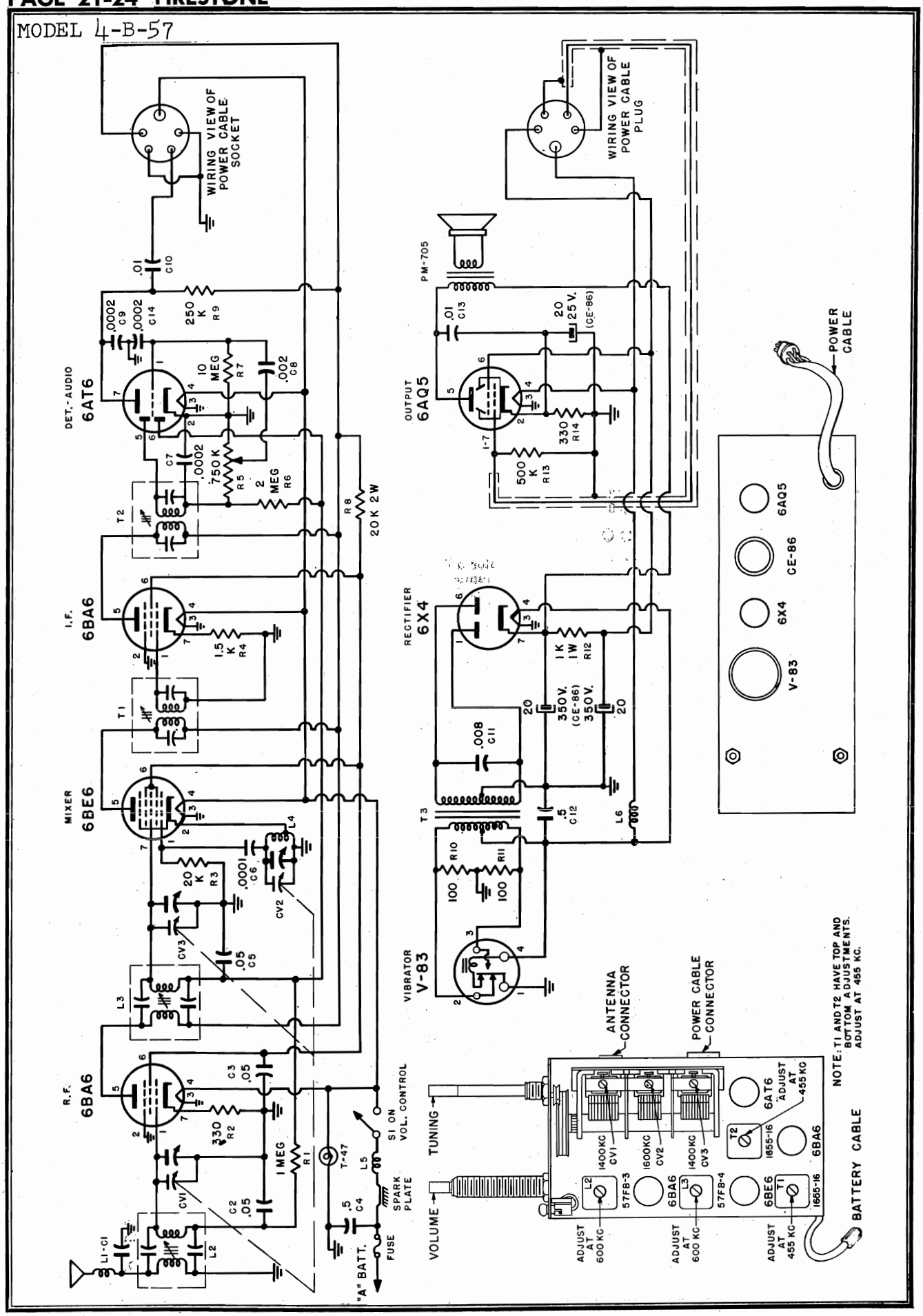

©John F. Rider

Compliments of www.nucow.com

MODEL 4-B-57,
Chevrolet, 1949-1950

PARTS AND PRICE LIST

CONDENSERS

Schematic Diagram Reference	*Part No.*	*Description*
C2, C3, C5	C207	.05 MFD 200 Volt Condenser
C4, C12	C209	.5 MFD 100 Volt Condenser
C6	CC200	100 MMFD Ceramic Condenser
C7, C9, C14	CC201	200 MMFD Ceramic Condenser
C8	C203	.002 MFD 400 Volt Condenser
C10, C13	C206	.01 MFD 600 Volt Condenser
C11	C205	.008 MFD 1600 Volt Condenser
CE-86	CE-86	20 MFD 350 Volt Electrolytic Condenser
		20 MFD 350 Volt Electrolytic Condenser
		20 MFD 25 Volt Electrolytic Condenser
CV1-CV2-CV3	CV-300	3 Section Variable Tuning

RESISTORS

R1	R309	1 megohm 1/2 Watt 20% Resistor
R2, R14	R303	330 Ohm 1/2 Watt 20% Resistor
R3	R306	20K Ohm 1/2 Watt 20% Resistor
R4	R314	1.5K Ohm 1/2 Watt 20% Resistor
R5	RV300	Volume Control 3/4 megohm with switch
R6	R310	2 megohm 1/2 Watt 20% Resistor
R7	R311	10 megohm 1/2 Watt 20% Resistor
R8	R313	20K Ohm 2 Watt 20% Resistor
R9	R307	250K Ohm 1/2 Watt 20% Resistor
R10, R11	R301	100 Ohm 1/2 Watt 20% Resistor
R12	R312	1K Ohm 1 Watt 20% Resistor
R13	R308	500K Ohm 1/2 Watt 20% Resistor

COILS AND TRANSFORMERS

L1-C1	L200	Motor noise elimination unit
L2	15053 or 57FB-3	Antenna coil
L3	15054 or 57FB-4	R.F. coil
L4	L201	R.F. oscillator coil
L5	L203	Choke, "A" line
L6	L202	Choke, vibrator hash
T1	14977 or 1655-16	1st IF transformer
T2	14977 or 1655-16	2nd IF transformer
T3	TV-100	Vibrator transformer
T4		Output transformer (Part of speaker not furnished separately)

MISCELLANEOUS

A300	"A" lead assembly
H301	Case, less covers for Power Supply Unit
H300	Case, complete with covers for R.F. tuning unit
H207	Clip, Anti-rattle
H208	Clip, coil mounting
H302	Cover, power supply unit mounting (with speaker louvres)
A201	Fuse 15 Amp.
504PC-300	Power Cable Assembly (complete with plug)
H212	Receptacle, Antenna cable
504-FC	Socket, power cable
PM-705	Speaker, 5 1/4" PM (includes output transformer)
V-83	Vibrator
H310	Knob
H311	Cup washer
H312	Plastic Escutcheon
H313	1/2 x 28 hex nut
C100	.5 MFD Generator Condenser
R100	Distributor Suppressor

DIAL PARTS

D300	Dial Scale
PS300	Dial Pointer
DS300	Drive Shaft Assembly
H201	Grommet, rubber drive
T51	Pilot Light
H214	Pilot Light Socket
H203	Pulley, idler
H204	Spring, Dial drive String Tension
H215	String, dial drive

©John F. Rider

Compliments of www.nucow.com

MODEL 4-B-58, Dodge, Plymouth, 1949-1950

DESCRIPTION

Your new Automobile Receiver is a 6-tube (including rectifier) superhetrodyne, designed to operate from the 6-volt storage battery in your car. It is custom-built to mount behind the instrument panel in the place provided for a radio by the automobile manufacturer. It has a self-contained PM speaker and covers the frequency range 538 to 1600 KC. Two simple controls are provided for operating the receiver. (See Fig. 1.)

This receiver has been designed with a tuned RF stage and a 3-gang tuning condenser thereby insuring the finest in sensitivity and selectivity. For best results we recommend Firestone disappearing fender-well aerial stock No. 4-B-21. The unit is simple to install and requires no electrical adjustment after installation.

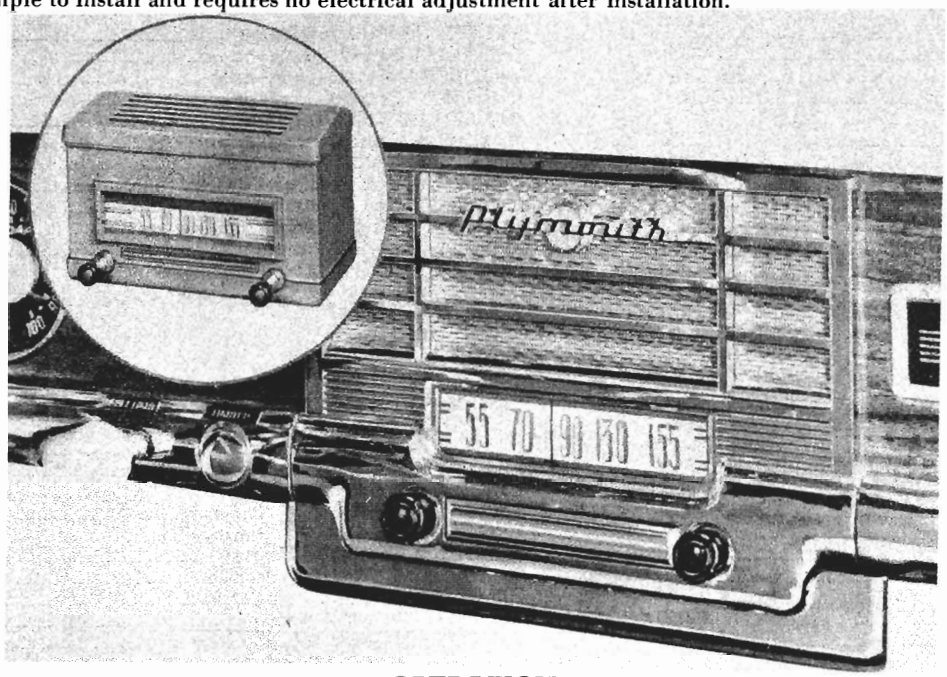

Fig. 1

OPERATION

VOLUME CONTROL KNOB

This knob is located on the left side of the radio. Turning this knob slightly to the right until a slight click is heard will put the radio into operation. Turning this knob further to the right will increase the volume and turning it to the left will decrease the volume. After a station has been selected, the volume control should be adjusted to desired level. The volume should never be reduced by detuning the station selector knob.

STATION SELECTOR KNOB

This knob is located on the right side of the radio. This knob should be turned until a desired station has been selected. Adjust this knob very carefully until the station comes in with the most natural tone.

INSTALLATION
PLYMOUTH P18 SPECIAL DELUXE

1. Remove six screws securing Radio Grille in place and remove Radio Grille.
2. Remove dummy plates covering radio dial and control openings.
3. Remove knobs, cup washers, hex nuts and washers from control shafts and mounting bushings.
4. Secure two mounting brackets to Radio Grille with 3/8 inch long 10-32 self-tapping screws, lockwashers, and cup washers as shown in detail assembly drawing, Fig. 2.
5. Place radio control cover plate over mounting bushings.
6. Position receiver behind Radio Grille so that mounting bushings and shafts protrude through the grille.
7. Attach receiver by replacing washers and hex nuts on mounting bushings.
8. Replace cup washers and knobs over shafts.
9. Secure receiver to mounting brackets with two No. 8 self-tapping thumb screws.
10. Insert radio with attached grille through front opening on instrument panel.
11. Replace grille mounting screws.
12. Connect battery lead to terminal marked "ACC" on ignition switch.
13. Plug antenna cable into receiver.

PLYMOUTH P17, P18 4-DOOR DELUXE AND P18 CLUB COUPE DELUXE DODGE "WAYFARER" AND "MEADOWBROOK"

These models are not equipped by the car manufacturers with a radio grille.

The following parts must be obtained from any authorized Plymouth or Dodge dealer before an installation can be made in any of these cars.

Plymouth P17, P18 4-Door DeLuxe, P18 Club Coupe DeLuxe
Radio Grille No. 1299913

Dodge "Meadowbrook" or "Wayfarer"
Radio Grille No. 1301360

© John F. Rider

Compliments of www.nucow.com

MODEL 4-B-58, Dodge, Plymouth, 1949-1950

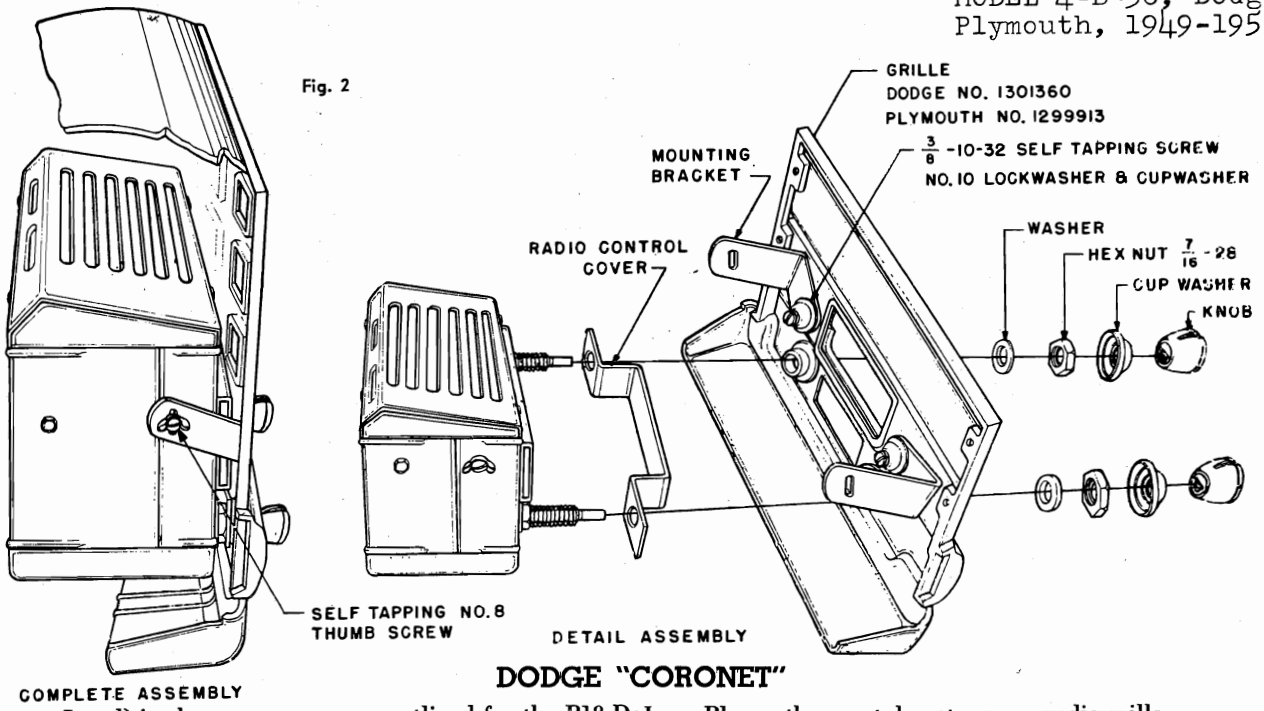

DODGE "CORONET"

Install in the same manner as outlined for the P18 DeLuxe Plymouth except do not remove radio grille.

ACCESSORIES FURNISHED FOR INSTALLATION

MOUNTING PARTS KIT

The following mounting hardware parts are shipped attached to the receiver.
(See detail assembly drawing FIG. 2)

2 Washers
2 $\frac{7}{16}$-28 hex nuts
2 Cup washers
2 Knobs
2 Mounting Brackets
2 No. 8 self-tapping thumb screws
1 Radio control cover

An envelope containing additional mounting hardware is supplied with this receiver. It contains the following parts:

2 $\frac{3}{8}$ 10-32 self-tapping screws
2 Cup washers
2 No. 10 lockwashers

SUPPRESSION KIT

1 Distributor Suppressor
1 .5 MFD Generator Condenser

MOTOR NOISE ELIMINATION

SUPPRESSION KIT

A suppression kit is shipped with this receiver. It contains the following parts:

1 Generator Condenser.
1 Distributor Suppressor.

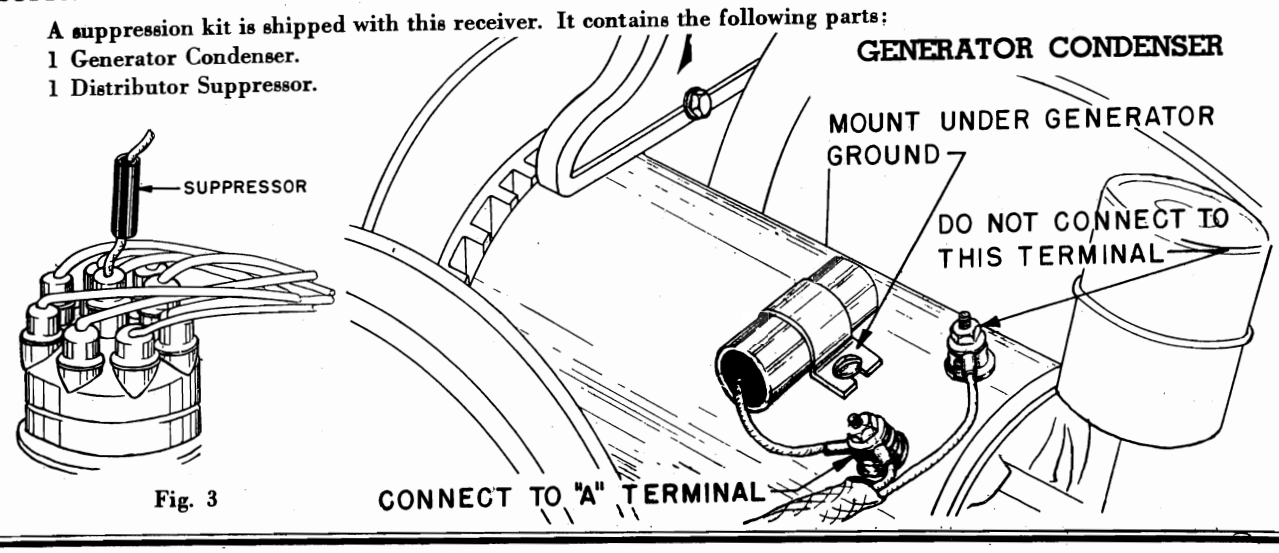

Fig. 3

©John F. Rider

Compliments of www.nucow.com

MODEL 4-B-58, Dodge, Plymouth, 1949-1950

DISTRIBUTOR SUPPRESSOR

Disconnect the center lead in the distributor head of the motor. Cut lead approximately 2 inches back from metal tip end. Screw suppressor into cut end of long lead. Screw cut end of short lead into suppressor. Plug lead, with attached suppressor, back into distributor head.

The generator condenser and distributor suppressor will normally eliminate all objectionable motor noise. If the motor noise persists, a .5 MFD by-pass condenser may be connected to either side of the ammeter with the ground lug fastened to a good ground nearby.

WHEEL STATIC

Wheel static is a form of interference caused by the rotation of the front wheels of the car, and it is, of course, only noticed when the car is in motion. If this form of interference is present, it can be eliminated by installing wheel static collector springs between the inner hub cap and the spindle shaft.

ELECTRICAL ACCESSORIES

In some cases, it may be found that car accessories such as electric heaters, lighters, automatic relays or gauges, may cause interference while in operation. Proper procedure in such cases is to connect a .5 MFD by-pass condenser from ground to the suspected accessory until the source of interference is found. The condenser then should be permanently mounted in this location.

SERVICE DATA

ELECTRICAL SPECIFICATIONS

Power Supply	6.3 Volts DC
Current	5.5 Amp. average
Frequency Range	538-1600 KC
Speaker	5" PM
Power Output	2 watts, undistorted
	3 watts, maximum
ensitivity	2-3 microvolts average for 1 watt output
Selectivity	40 KC broad at 1000 times signal, at 1000 KC

This receiver contains the following:
1—6BA6—RF Amplifier
1—6BE6—Converter
1—6BA6—I. F. Amplifier
1—6AT6—Detector—AVC—1st Audio
1—6AQ5—Power Output
1—6X4—Rectifier

SERVICE NOTES

Voltage taken from the different points of the circuit to the chassis are measured with volume control in maximum position, all tubes in their sockets, no signal applied, and with a volt meter having a resistance of 20,000 Ohms per volt. These voltages are clearly shown on the voltage chart, (Fig. 4).
All voltages should be measured with an input voltage of 6.3 volts DC.
To check for open by-pass condensers, shunt each condenser with another one having the same capacity and voltage rating which is known to be good until the defective unit is located.

ALIGNING INSTRUCTION

Never attempt any adjustments on this receiver unless it becomes necessary to replace a coil or transformer, or the adjustments have been tampered with in the field. Always make certain that other circuit components, such as tubes, condensers, resistors, etc., are normal before proceeding with realignment.
If realignment is necessary follow the instructions given under the heading "Alignment Procedure". After realignment has been completed repeat the procedure as final check.

INSTRUCTIONS FOR SERVICING RECEIVER COMPONENTS

The novel design of this receiver permits servicing all components without removing the chasis from the case. The top cover (the one with the speaker louvres) can be removed by removing the four (4) screws securing it to the case. This exposes all tube sockets, connections, resistors and condensers for observation and service.
Removing the bottom cover makes it possible to service tubes, vibrator, and volume control.

©John F. Rider

Compliments of www.nucow.com

MODEL 4-B-58, Dodge, Plymouth, 1949-1950

ALIGNMENT PROCEDURE

Volume control—Maximum, all adjustments.
No signal applied to antenna.
Power input—6.3 volts.
Connect dummy antenna in series with output lead of signal generator.
Connect ground lead of signal generator to chassis.
Repeat alignment procedure as a final check.

The following equipment is necessary for proper alignment:
Signal generator that will provide the test frequencies as listed, modulated 400 cycles, 30%.
Non-metallic screwdriver.
Output meter. (1.8 volt for 1 watt output.)
Dummy antennas—.1 MFD., 100 MMFD.
For alignment points refer to Schematic Diagram.

Dial Setting	*Generator Frequency*	*Dummy Ant.*	*Generator Connection*	*Trimmer Reference*	*Trimmer Adjustment*	*Trimmer Function*
1) Fully open	455 KC	.1 MFD	6BE6 Grid	T2 Top & bottom	Maximum	Output I.F.
2) Fully open	455 KC	.1 MFD	6BE6 Grid	T1 Top & bottom	Maximum	Input I.F.
3) Fully open	1600 KC	100 MMFD	Ant. lead	CV2	Maximum	Oscillator
4) Tune in signal from generator	1400 KC	100 MMFD	Ant. lead	CV3	Maximum	RF Stage
5) Tune in signal from generator	1400 KC	100 MMFD	Ant. lead	CV1	Maximum	Antenna
6) Tune in signal from generator	600 KC	100 MMFD	Ant. lead	L3	Maximum	RF Stage
7) Tune in signal from generator	600 KC	100 MMFD	Ant. lead	L2	Maximum	Antenna
8) Repeat steps 4 and 5						

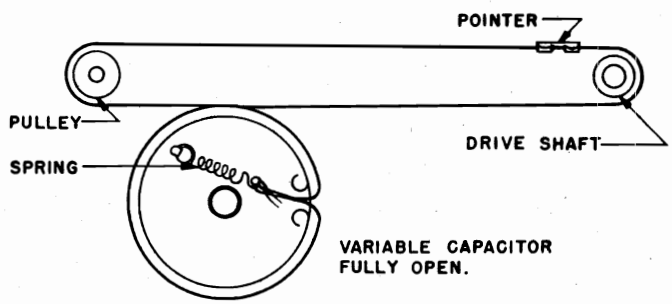

Fig. 5

DIAL CORD DRIVE

BOTTOM VIEW OF CHASSIS

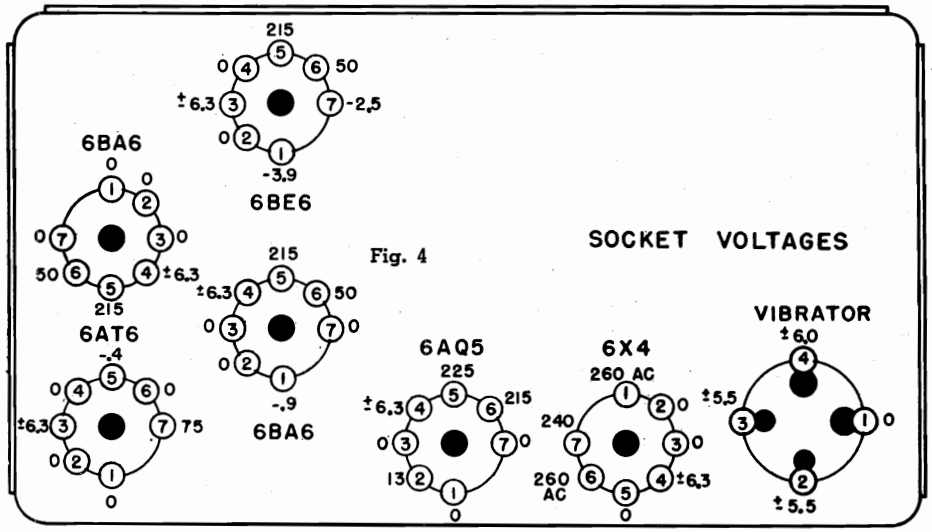

Fig. 4

SOCKET VOLTAGES

FRONT OF CHASSIS

©John F. Rider

Compliments of www.nucow.com

MODEL 4-B-58, Dodge, Plymouth, 1949-1950

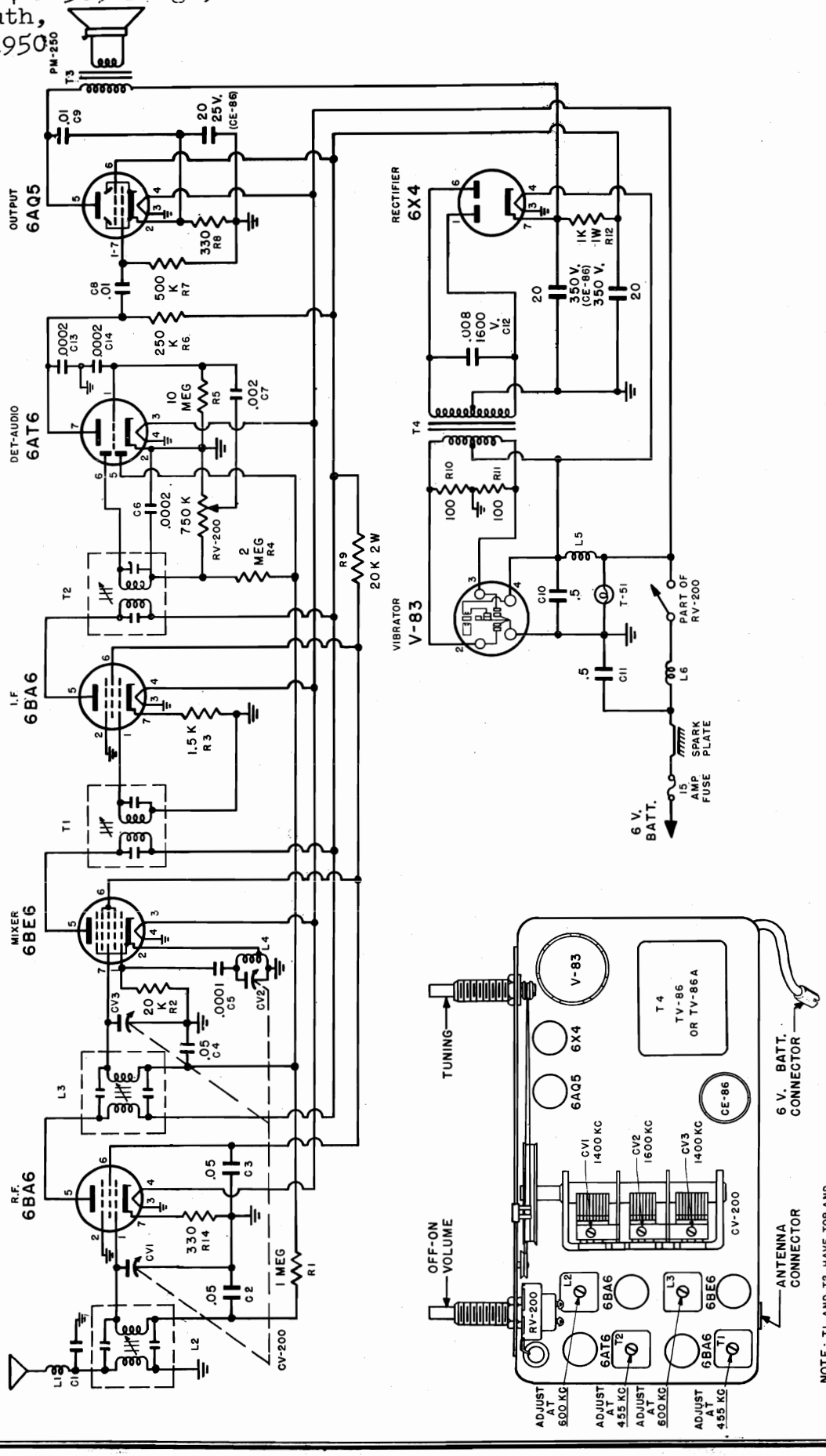

Fig. 6

©John F. Rider

Compliments of www.nucow.com

MODEL 4-B-58, Dodge, Plymouth, 1949-1950

PARTS AND PRICE LIST

CONDENSERS

Schematic Diagram Reference	Part No.	Description
C2, C3, C4	C207	.05 MFD 200 volt condenser
C5	CC200	100 MMFD ceramic condenser
C6, C13, C14	CC201	200 MMFD ceramic condenser
C7	C203	.002 MFD 400 volt condenser
C8, C9	C206	.01 MFD 600 volt condenser
C10, C11	C209	.5 MFD 100 volt condenser
C12	C205	.008 MFD 1600 volt condenser
CE-86	CE-86	20 MFD 350 volt electrolytic condenser 20 MFD 350 volt electrolytic condenser 20 MFD 25 volt electrolytic condenser
CV-200	CV-200	3 section variable tuning condenser

RESISTORS

R1	R309	1 megohm 1/2 watt 20% resistor
R2	R306	20K ohm 1/2 watt 20% resistor
R3	R314	1.5K ohm 1/2 watt 20% resistor
R4	R310	2 megohm 1/2 watt 20% resistor
R5	R311	10 megohm 1/2 watt 20% resistor
R6	R307	250K ohm 1/2 watt 20% resistor
R7	R308	500K ohm 1/2 watt 20% resistor
R8, R13	R303	330 ohm 1/2 watt 20% resistor
R9	R313	20K ohm 2 watt 20% resistor
R10, R11	R301	100 ohm 1/2 watt 20% resistor
R12	R312	1K ohm 1 watt 20% resistor
RV-200	RV-200	Volume control 3/4 megohm with switch

COILS AND TRANSFORMERS

L1-C1	L200	Motor noise elimination unit
L2	57FB-3	Antenna Coil
L3	57FB-4	RF coil
L4	L201	RF Oscillator coil
L5	L202	Choke, vibrator hash
L6	L203	Choke, "A" line
T1	1655-16	1st IF transformer
T2	1655-16	2nd IF transformer
T3		Output transformer (Part of speaker not furnished separately)
T4	TV-86 or TV-86A	Vibrator transformer

MISCELLANEOUS

A200	"A" lead assembly
H216	Bracket, mounting
H206	Case, (less covers)
H207	Clip, anti-rattle
H208	Clip, coil mounting
H209	Cover, bottom case
H218	Cover, radio control
H210	Cover, top case (with speaker louvres)
H311	Cup washers, shaft
A201	Fuse, 15 amp
H211	Grommet, rubber, gang mounting
H310	Knob
H217	Nuts, mounting
H212	Receptacle, antenna cable
PM-250	Speaker, 5" PM includes output transformer
V-83 or V-94	Vibrator
H113	7/16-28 Hex nut
C100	.5 MFD Generator condenser
R100	Distributor suppressor

DIAL PARTS

D200	Dial Scale
PS200	Dial Pointer
DS200	Drive shaft assembly
H201	Grommet, rubber drive
T51	Pilot light
H202	Pilot light socket
H203	Pulley, idler
H204	Spring, Dial Drive String Tension
H205	String, Dial Drive

©John F. Rider

Compliments of www.nucow.com

MODELS 4-C-16, 4-C-17

TUNING RANGE	535 to 1730 KC
INTERMEDIATE FREQUENCY	455 KC
LOUD SPEAKER	4 Inch P.M.
VOICE COIL IMPEDANCE	3.2 OHM at 400 Cycles
POWER OUTPUT	Undistorted—110 Milliwatts Maximum—240 Milliwatts
TUBE COMPLEMENT	1R5 Modulator-Oscillator 1U4 I.F. Amplifier 1U5 Det., AVC, 1st Audio 3V4 Power Output
CABINET DIMENSIONS	9-9/16" x 5" x 7"
WEIGHT	4¼ lbs. less batteries
POWER SUPPLY	110-120 Volt AC-DC and battery
BATTERY SPECIFICATIONS	One 4½ Volt "A", Firestone Stock No. 4-D-86 One 90 Volt "B" Firestone Stock No. 4-D-88 Or One 67½ Volt "B" Firestone Stock No. 4-D-84

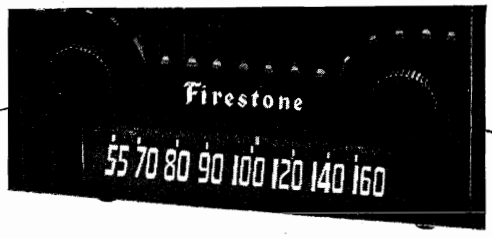

Steps	Set receiver dial to:	TEST OSCILLATOR: Adjust test oscillator frequency to:	TEST OSCILLATOR: Attach output of test oscillator to	Refer to parts layout diagram for location of trimmers mentioned below:
1	Any point where no interfering signal is received	Exactly 455 K. C.	High side to grid of 1R5 tube. Low side to common negative through a .02 Mfd. Blocking Condenser.	Adjust each of the 2nd I.F. transformer trimmer adjustment screws for maximum output, then adjust each of the 1st I.F. transformer trimmer adjustment screws for maximum output.
2	Rotate gang condenser to minimum capacity	Exactly 1730 K. C.	See paragraph (C) above	Adjust 1730 K. C. oscillator trimmer for maximum output.
3	Approximately 1400 K. C.	Approx. 1400 K. C.	See paragraph (D) above	Adjust 1400 K. C. antenna trimmer for maximum output.

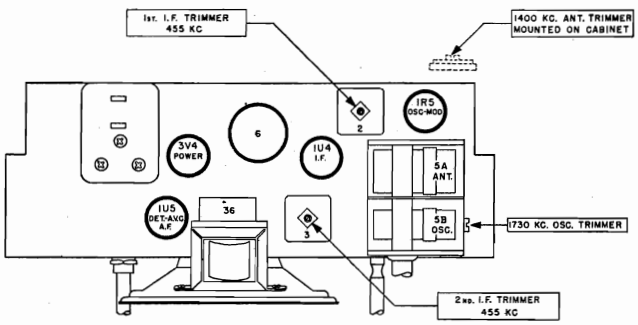

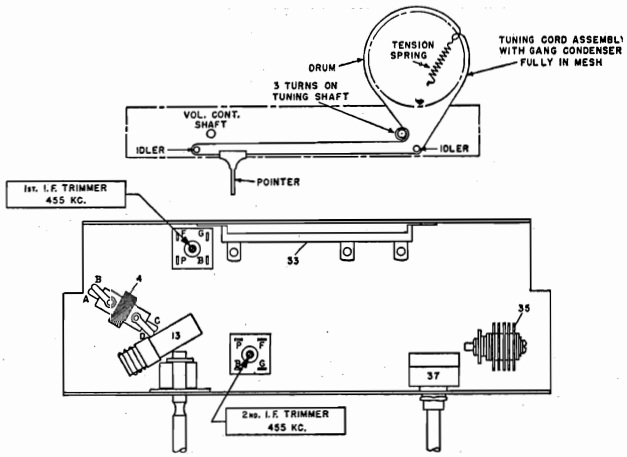

©John F. Rider

Compliments of www.nucow.com

ALIGNMENT PROCEDURE

Be sure to follow procedure carefully and in the order given—otherwise the receiver will be insensitive and the dial calibration incorrect. For alignment procedure, read tabulations from left to right. Make the adjustment marked (1) first, (2) next, (3) third.

BE SURE TO HAVE METAL BASE PLATE MOUNTED ON CHASSIS DURING ALIGNMENT AT 1730 KC AND 1400 KC STEPS 2 AND 3 OF ALIGNMENT TABLE.

Before starting alignment:

(A) Check tuning dial adjustment by tuning gang condenser until plates touch maximum capacity stop (completely in mesh) at which point the dial indicator must be exactly even with the outside edge of the first 5 in the 55 calibration number at the low frequency end of the dial scale. If dial indicator does not point exactly to the outside edge, move pointer to correct position.

(B) Use an accurately calibrated test oscillator with some type of output measuring device.

(C) WHEN ADJUSTING THE 1730 KC OSCILLATOR TRIMMER, remove chassis from cabinet and disconnect the loop connection wires from the loop terminal strip. Attach a 1 megohm resistor across these connections and feed output of test oscillator across the 1 megohm resistor.

(D) THE 1400 KC LOOP ANTENNA TRIMMER should be adjusted only after all other adjustments have been made and with the set mounted in the cabinet. When aligning the 1400 KC Antenna Trimmer, couple test oscillator to receiver loop by: (1) make loop consisting of five to ten turns of No. 20 to No. 30 size wire, wound on a 2" or 3" form; (2) connect this loop across output of test oscillator; (3) place test oscillator loop near radio loop. BE SURE THAT NEITHER LOOP MOVES WHILE ALIGNING.

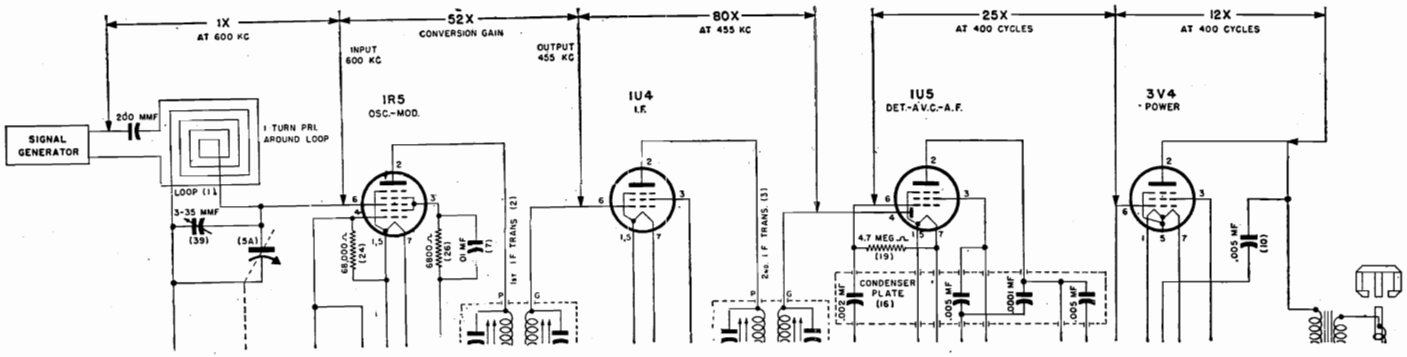

1. For all gain measurements connect signal generator as shown. Use 600 KC. signal with 400 cycle modulation (use nearby frequency if local station interferes.)

2. Be sure radio is carefully tuned to generator signal (use weak signal for sharp tuning.)

3. When using a "channel" type instrument carefully tune it for maximum output at desired frequency before making measurements.

Differences in tube characteristics, tolerance of parts, adjustment of tuned circuits, and variations of line voltage will influence stage gain. Accuracy of measurements is dependent upon careful tuning of receiver to generator signal and experience in using your test equipment. These factors may create considerable variation in gain measurements.

ORDERING PARTS

Order parts from your nearest Firestone Tire and Auto Supply Warehouse. When ordering parts, it is important that the correct code number, and stock number be given with the correct part name and part number as shown in the parts list. You will find the stock number and code number stamped on the chassis pan.

Be sure R.F. and I.F. stages are accurately aligned before measuring gain. R.F. gains can be measured with a "channel" type instrument containing a tuned and calibrated R.F. amplifier. A vacuum tube voltmeter may be used for audio gain measurements. Observe following precautions:

©John F. Rider
Compliments of www.nucow.com

MODELS 4-C-16, 4-C-17

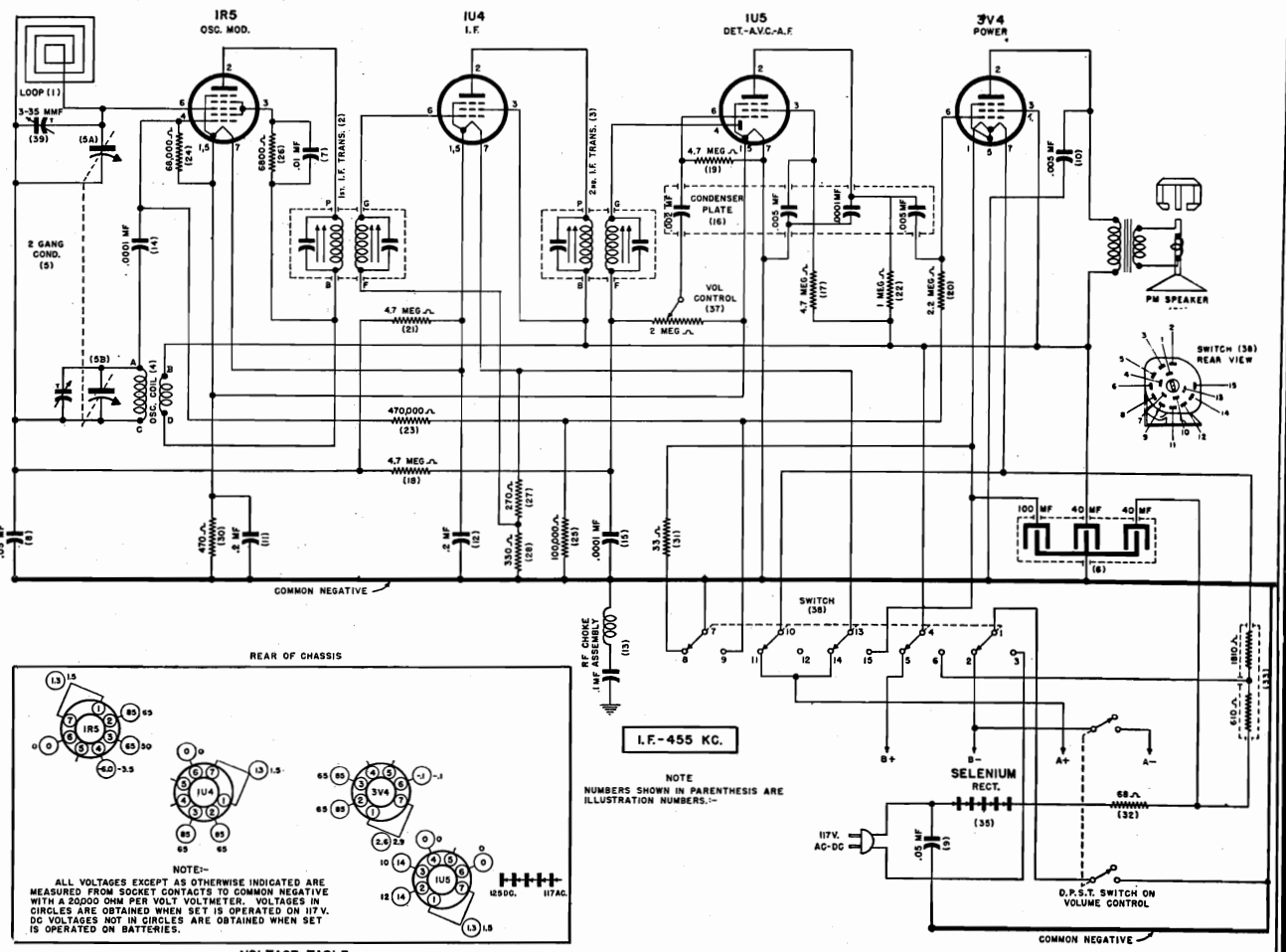

NOTE
NUMBERS SHOWN IN PARENTHESIS ARE ILLUSTRATION NUMBERS.:-

NOTE:-
ALL VOLTAGES EXCEPT AS OTHERWISE INDICATED ARE MEASURED FROM SOCKET CONTACTS TO COMMON NEGATIVE WITH A 20,000 OHM PER VOLT VOLTMETER. VOLTAGES IN CIRCLES ARE OBTAINED WHEN SET IS OPERATED ON 117 V. DC VOLTAGES NOT IN CIRCLES ARE OBTAINED WHEN SET IS OPERATED ON BATTERIES.

VOLTAGE TABLE
(BOTTOM VIEW OF CHASSIS)

PARTS LIST

Illus. No.	Part No.	Part Name	Description
1	64E18	Antenna	Loop
2	20E463	Coil	1st I.F. Transformer
3	20E463	Coil	2nd I.F. Transformer
4	20E338	Coil	Oscillator
5	24E40	Condenser	Tuning, Two Gang
*6	25E29	Condenser	Dry Electrolytic, 40-40 Mfd. 150 V. & 100 Mfd. 10 V.
7	23E211	Condenser	Tubular, .01 Mfd. 200 V.
8	23E216	Condenser	Tubular, .05 Mfd. 200 V.
9	23E416	Condenser	Tubular, .05 Mfd. 400 V.
10	23E408	Condenser	Tubular, .005 Mfd. 400 V.
11	23E220	Condenser	Tubular, .2 Mfd. 200 V.
12	23E220	Condenser	Tubular, .2 Mfd. 200 V.
13	20E407	Choke	R. F.
14	23E24	Condenser	Ceramic, .0001 Mfd.
15	23E24	Condenser	Ceramic, .0001 Mfd.
16	23E2024	Condenser	Ceramic Condenser Plate
17	27E475	Resistor	Carbon, 4.7 Megohm, 1/3 W.
18	27E475	Resistor	Carbon, 4.7 Megohm, 1/3 W.
19	27E475	Resistor	Carbon, 4.7 Megohm, 1/3 W.
20	27E225	Resistor	Carbon, 2.2 Megohm, 1/3 W.
21	27E475	Resistor	Carbon, 4.7 Megohm, 1/3 W.
22	27E105	Resistor	Carbon, 1 Megohm, 1/3 W.
23	27E474	Resistor	Carbon, 470,000 Ohm, 1/3 W.
24	27E683	Resistor	Carbon, 68,000 Ohm, 1/3 W.
25	27E104	Resistor	Carbon, 100,000 Ohm, 1/3 W.
26	27E682	Resistor	Carbon, 6,800 Ohm, 1/3 W.
27	27E271	Resistor	Carbon, 270 Ohm, 1/3 W.
28	27E331	Resistor	Carbon, 330 Ohm, 1/3 W.
30	27E471	Resistor	Carbon, 470 Ohm, 1/3 W.
31	27E330-2	Resistor	Carbon, 33 Ohm, 1/2 W.
32	27E680-3	Resistor	Carbon, 68 Ohm, 1 W.
33	27E1005	Resistor	Wire Wound, 1810 and 610 Ohms, 8 W.
*35	57E1-4	Rectifier	Selenium
	OR		
*35	57E1-5	Rectifier	Selenium
36	1E29	Speaker	4" P.M.
*37	28E30	Volume Control	With D.P.S.T. Switch, 2 Megohm
38	29E20	Switch	Spring Return Type
39	24E33	Condenser	Trimmer 3-35 MMF. Working Range

IMPORTANT: When ordering complete cabinet, or cabinet parts, BE SURE TO MENTION REQUIRED COLOR in addition to proper part number.

MISCELLANEOUS PARTS

Part No.	Part Name	Description
*20E343-8	Cabinet	Complete Cabt. Assembly with Handle, Baffle, Loop and Cabt. Back, Ivory
*20E343-7	Cabinet	Complete Cabt. Assembly with Handle, Baffle, Loop and Cabt. Back, Tan
20E344-8	Cabinet, less Back	Cabinet Assembly, less Back, but with Handle, Baffle and Loop, Ivory
20E344-7	Cabinet, less Back	Cabinet Assembly, less Back, but with Handle, Baffle and Loop, Tan
*7E165-9	Cabinet Back	Back for Cabinet with 65E27 Spring Hinge, Maroon
*7E165-8	Cabinet Back	Back for Cabinet with 65E27 Spring Hinge, Tan
20E253-19	Dial Cord	Dial Drive Cord
65E2	Dial Spring	Dial Cord Tension Spring
20E348	Dial Shaft	Drive Shaft Assembly
5E32	Backplate	Dial Backplate
35E8-8	Dial Pointer	Dial Indicator
20E249	Batt. Connector	B— Battery Connector Assembly
20E249-2	Batt. Connector	B+ Battery Connector Assembly
20E340	"A" Batt. Cable	"A" Battery Cable with Plug
55E21-1	Handle Bracket	Bracket for Mounting Handle
52E31-5	Handle Cover	Plastic Cover, Ivory
52E31-2	Handle Cover	Plastic Cover, Tan
55E39	Handle Strap	Clock Spring Steel
65E27	Hinge	Spring Hinge for Cabinet Back
37E17-9	Knob	Ivory
37E17-6	Knob	Tan
41E14	Line Cord	Line Cord and Plug
17E3-2	Plug	"A" Battery Plug
20E345	Speaker Baffle	Baffle Assembly with Grille Cloth, Tan
20E345-2	Speaker Baffle	Baffle Assembly with Grille Cloth, Ivory

MOUNTING HARDWARE

Part No.	Part Name	Description
13E103-9	Clip	Holds Back to Cabinet
82E37-F10	Screw	6-20x3/8—Holds 13E103-9 Clip to Cabt.
82E37-F10	Screw	6-20x3/8—For Mounting Chassis
10E43	Stud	Trimount, for Mounting Speaker Baffle to Cabinet

©John F. Rider

Compliments of www.nucow.com

SPECIFICATIONS

STOCK NO. 4-C-18

Cabinet Dimensions
11 5/8" x 9 1/4" x 6 5/16"

Weight
7 lbs. 4 oz., less battery

Power Supply
105-125 volt 60 cycle AC-DC or
Self-Contained battery

Tuning Range
545 to 1610 KC

I. F. Frequency
455 KC

Loud Speaker
5 inch P.M.

Voice Coil Impedance
3.2 ohms at 400 cycles

Power Output
Maximum 300 milliwatts

CODE NO. 332-0-186193

Tube Complement
1L4—R. F. Amplifier
1R5—Oscillator Converter
1L4—I. F. Amplifier
1U5—AVC, Detector, 1st Audio
3V4—Power Output

Battery
1 combination A-B battery pack,
9 volt "A", 90 volt "B",
Firestone Stock No. 4-D-130

ALIGNMENT PROCEDURE

The alignment should be made with volume control fully on, and the output from the signal generator as low as possible, to prevent A.V.C. action from interfering with correct alignment.

For alignment procedure read tabulations from left to right, and make the adjustment marked (1) first, (2) next, (3) third, (4) fourth.

Before starting alignment:

(a) Check position of dial pointer. With variable condenser set for maximum capacity (plates completely in mesh) the pointer should be aligned with the extreme left dot on dial backing plate. Adjust pointer to correct position, if necessary.

(b) Use an accurately calibrated test oscillator with some type of output measuring device.

Steps	Set receiver dial to:	TEST OSCILLATOR			Refer to parts layout diagram for location of trimmers mentioned below:
		Adjust test oscillator frequency to:	Use dummy antenna in series with output of test oscillator consisting of:	Attach output of test oscillator to:	
1	Minimum capacity (fully open)	455 K.C.	.1 MFD. condenser	High side to grid of 1R5 tube. Low side to common negative. (through .25 MFD. Cond.)	Adjust each trimmer on the second I. F. transformer for maximum output—then adjust each trimmer on the first I. F. transformer for maximum output.
2	Minimum capacity (fully open)	Exactly 1610 K.C.	.1 MFD. condenser	High side to grid of 1R5 tube. Low side to common negative.	Adjust C6 oscillator trimmer for maximum output.
3	Approx. 1400 K.C.	Approx. 1400 K.C.	.1 MFD. condenser	High side to grid of 1L4, RF Low side to common negative.	Adjust C5, R.F. trimmer for maximum output.
4	Approx. 1400 K.C.	Approx. 1400 K.C.		Loosely coupled to Loop Antenna	Adjust C4 antenna trimmer for maximum output.

©John F. Rider

Compliments of www.nucow.com

Before proceeding with stage measurements be sure the receiver is properly aligned. R.F. gains can be measured by a "channel" type instrument containing a tuned and calibrated R.F. amplifier. A vacuum tube voltmeter may be used for audio gain measurements. Observe the following precautions:

1. For gain measurements connect the high side of the signal generator through a .1 MFD condenser to the appropriate point as indicated on the diagram below. The ground of the signal generator should be connected to common negative. The RF and IF measurements are made using 30% 400 cycle modulation.
2. Be sure radio is carefully tuned to generator signal (use weak signal for sharp tuning).
3. When using a "channel" type instrument carefuly tune it for maximum output at desired frequency before making measurements.

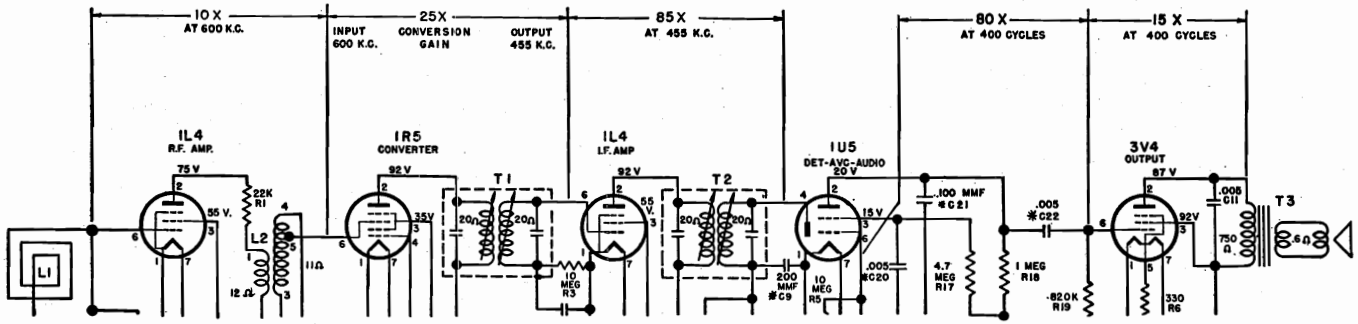

Stage gain measurements can be influenced by the normal manufacturers tolerances allowed in parts, differences in individual tube characteristics, the adjustment of the tuned circuits and variations in line voltage. Careful tuning of the receiver as well as experience in using your test equipment will determine the accuracy of the measurements taken. Due to all of these factors, the stage gains shown in the above diagram are approximate values rather than absolute as it is possible to introduce many variations in these measurements.

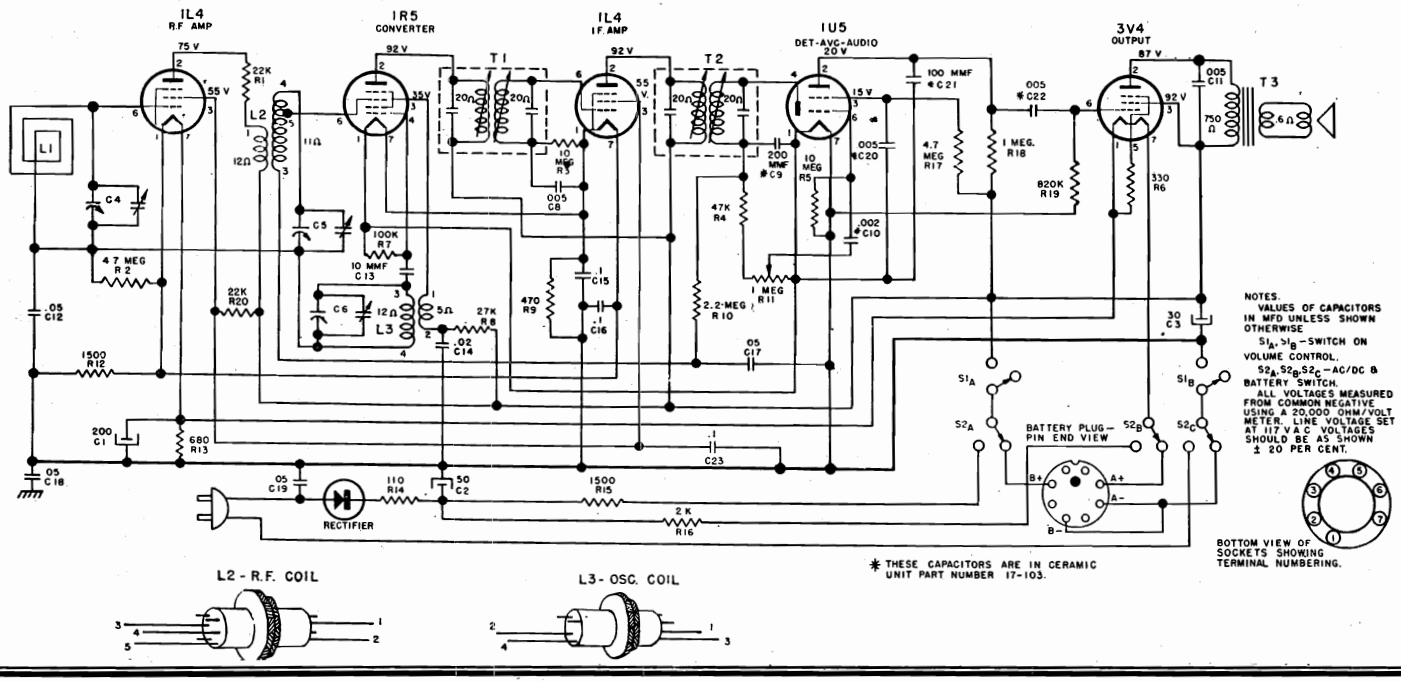

©John F. Rider
Compliments of www.nucow.com

MODEL 4-C-18, Vacationer

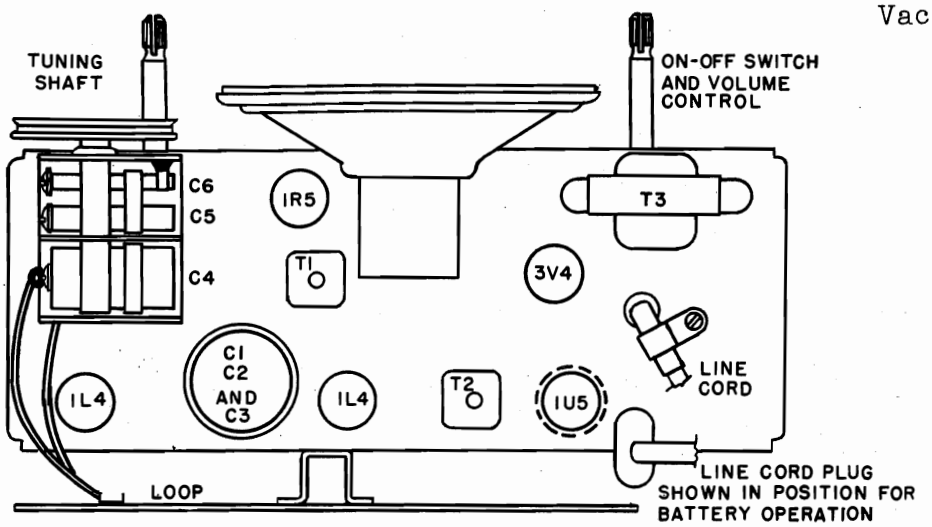

Fig. 2. Chassis—top view

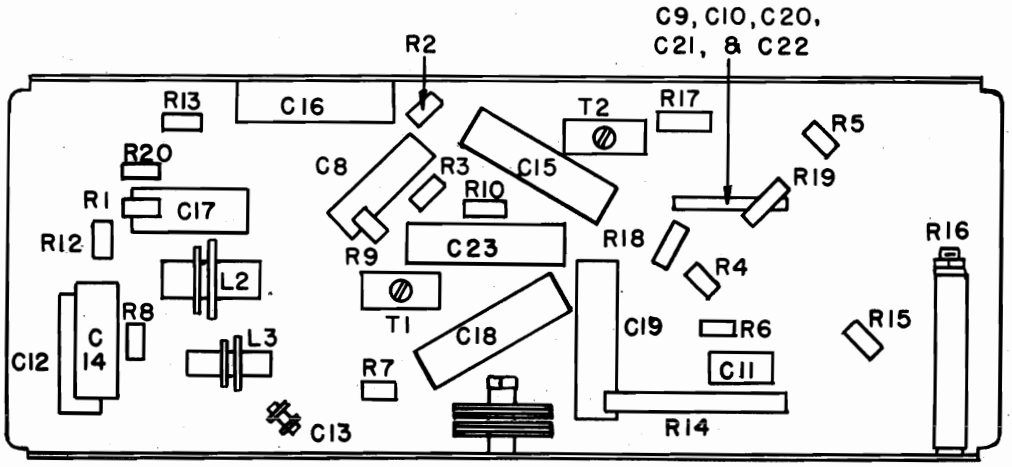

SELENIUM RECTIFIER

Fig. 3. Chassis—bottom view

PARTS LIST

Circuit Diagram Reference	Part Number	Description
		CONDENSERS
C1, C2, C3	18-296	Capacitor, electrolytic
C4, C5, C6	19-208	Capacitor, variable (3 gang)
C8, C11	16-153	Capacitor, .005 mfd. 600 volt
C9, C10, C20, C21, C22	17-103	Capacitor, ceramic unit
C12, C17	16-152	Capacitor, .05 mfd. 200 volt
C13	15-186	Capacitor, 10 mmfd. mica
C14	16-150	Capacitor, .02 mfd. 400 volt
C15, C16, C23	16-157	Capacitor, .1 mfd. 200 volt
C18, C19	16-179	Capacitor, .05 mfd. 400 volt
		RESISTORS
R1, R20	60-744	Resistor, 22,000 ohm, ½ watt, 10%
R2, R17	60-669	Resistor, 4.7 megohm, ½ watt
R3, R5	60-728	Resistor, 10 megohm, ½ watt
R4	60-730	Resistor, 47,000 ohm, ½ watt
R6	60-704	Resistor, 330 ohm, ½ watt, 10%
R7	60-727	Resistor, 100,000 ohm, ½ watt
R8	60-745	Resistor, 27,000 ohm, ½ watt
R9	60-770	Resistor, 470 ohm, ½ watt, 10%
R10, R19	60-725	Resistor, 2.2 megohm, ½ watt
R12, R15	60-729	Resistor, 1500 ohm, ½ watt, 10%
R13	60-708	Resistor, 680 ohm, ½ watt, 10%
R14	60-796	Resistor, 110 ohm, 3 watt, 10%
R16	60-757	Resistor, 2000 ohm, 10 watt, 5%
R18	60-668	Resistor, 1 megohm, ½ watt
		COILS AND TRANSFORMERS
L1	82-66	Loop, antenna
L2	10-535	R.F. coil
L3	10-553	Oscillator coil
T1, T2	10-508	Transformer, 1st and 2nd I.F.
T3	80-228	Transformer, output
		MISCELLANEOUS
	84-391	Cable, assembly, battery
	83-421	Clip, I.F. transformer mounting
R11, S1	24-186	Control, volume with switch
	23-151	Cord, power, AC/DC
	51-105	Cord, pointer travel, 29"
	47-108	Grommet, variable condenser
	76-13	Insulator, electrolytic
	11-416	Pointer rail bracket
	58-82	Pointer
	83-642	Rectifier, selenium
	75-69	Shaft, tuning
	68-39	Socket, miniature, wafer
	79-384	Speaker, 5" P.M.
	70-122	Spring, dial cord
	69-186	Switch, AC/DC/Battery
	86-51	Washer, "C", tuning shaft
	86-80	Washer, compression, tuning shaft
		CABINET
	44-14	Baffle
	42-469	Cabinet
	31-162	Dial plate
	67-557	Dial scale
	40-162	Escutcheon
	22-161	Fastener, Escutcheon
	98-16	Grille cloth
	52-310	Knob

©John F. Rider

Compliments of www.nucow.com

Compliments of www.nucow.com

MODELS 24, 37, 46, Ch. 100, 110

MODEL 37

INPUT 105-125 Volts, 60 Cycle

TUNER CHASSIS CH-110

POWER SUPPLY & AMPLIFIER CHASSIS PS #4

BASS SPEAKER QSD-A6
TREBLE SPEAKER QSD-A4

RECORD CHANGER RC-60

SPECIFICATIONS

POWER CONSUMPTION 250 Watts

TUNING RANGES
(Frequency Modulation.....88 to 108 Megacycles
(Short Wave Band #2.....6.2 to 9.9 Megacycles
(Short Wave Band #1.....12 to 17.5 Megacycles
(Standard Broadcast Band.540 to 1600 Kilocycles

POWER OUTPUT 20 Watts Undistorted

TUBE COMPLEMENT

Quantity	Type	Description
1	6SK7	R. F. Amplifier (AM)
1	6SA7	Oscillator & Converter (AM)
1	6SK7	I. F. Amplifier (AM)
1	6SL7-GT	2nd Det. (AM) First Audio
1	6J5	Bass Boost Amplifier
1	6J5	Audio Amplifier & Phase Inverter
2	6L6-G	Push Pull Power Output
2	5U4-G	Rectifier
1	6AG5	R. F. Amplifier (FM)
1	6AG5	First Detector (FM)
1	6AG5	H. F. Oscillator (FM)
1	6SA7	6.4 Mc. Osc. & 2nd Conv. (FM)
2	6SG7	I. F. Amplifiers (FM)
2	6SH7	Limiters (FM)
1	6H6	Discriminator (FM)
1	6J5-GT	Interstation Noise Suppressor (FM)
1	6U5	Tuning Indicator (FM-AM)

©John F. Rider

Compliments of www.nucow.com

MODELS 24, 37,
46, Ch. 100, 110

Speaker Field Resistance..... 350 Ohms (Bass)

Voice Coil Impedance at 400 cycles..... 8 Ohms (Bass)
3.3 Ohms (Treble)

Intermediate Frequencies..... 455 KC (AM)
10.7 MC (FM)
4.3 MC (FM)

SENSITIVITY

Frequency Modulation..... 10 Microvolts (approximately) to produce complete limiting.
Standard Broadcast Band..... 10 Microvolts (approximately)
Short Wave Band #1..... 10 Microvolts (approximately)
Short Wave Band #2..... 10 Microvolts (approximately)

NOTE: By definition, the sensitivity is equal to the smallest signal input that will produce a standard test output of 0.5 watt in a matched load resistor across the secondary of the output transformer.

SPECIAL FEATURES

FREQUENCY MODULATION

1. A separate gang condenser and completely independent F.M. section is incorporated. Its advantages are extremely good stability and ease in servicing, both electrically and mechanically.

2. A special type of double conversion circuit is used which makes possible the exceptionally good sensitivity and stability of this receiver.

3. Temperature-compensated capacitors are used to insure stability in tuning.

4. Dual limiters are incorporated to insure adequate limiting action and freedom from impulse noises.

5. A special interstation noise silencer circuit is incorporated, which serves to eliminate tube "hiss" or "rush" ordinarily heard on F.M. receivers when there is no F.M. signal present.

6. Provision is made for an indoor or outdoor Dipole antenna. The receiver is furnished with an indoor Dipole antenna fastened to the back of the cabinet.

AMPLITUDE MODULATION

1. Adjustable iron cores are used in the broadcast tuning coils to provide greater accuracy of alignment.

2. Ceramic trimming capacitors are used with the short wave tuning coils for accuracy and stability.

©John F. Rider

Compliments of www.nucow.com

3. Provision is made for 3 types of AM antennae. A loop is mounted in the cabinet for local broadcast reception and binding posts are provided for either a short or long outside antenna.

4. A special bass boost amplifier is incorporated to insure adequate bass compensation.

5. Inverse feedback is used to reduce total harmonic distortion to an extremely low value and to provide high fidelity response.

6. A special high fidelity dual speaker combination is used.

7. The power transformer has been designed to operate at a maximum rise of 50°C above ambient temperature. This feature permits the transformer to run at an appreciably lower temperature than the average commercial transformer.

RECORD CHANGER

Detailed service information will be found in the special record changer instruction book, which is supplied to Freed-Eisemann dealers.

ALIGNMENT INSTRUCTIONS

CAUTION:

This receiver has been carefully aligned at the factory with special equipment designed for aligning frequency modulation receivers operating in the new band, 88 to 108 megacycles. Due to the fact that the proper equipment, such as a wide band frequency modulated signal generator and a wide band oscilloscope, etc., is not yet generally available, it is advisable not to attempt realigning this receiver unless it is absolutely necessary.

If it is necessary to align this receiver in the field, it is imperative that the following instructions be followed exactly.

IMPORTANT

The following equipment must be available before alignment is attempted:

1. Accurately Calibrated SIGNAL GENERATORS, one of which must cover the new FM band 88 to 108 megacycles.

2. ACCURATE Vacuum Tube Voltmeter which has an extremely high input resistance (approximately 10 megohms).

3. A zero center microammeter (100 microampere range each side of center).

©John F. Rider

Compliments of www.nucow.com

MODELS 24, 37,
46, Ch. 100, 110

4. An insulated low loss high frequency alignment screw driver.

DIAL POINTER ADJUSTMENT

Rotate both gang condensers to the fully closed position and set the dial pointers to the index mark at the low ends of the scales. If adjustment is necessary, make sure to cement the pointer carriage to the dial cord.

ALIGNMENT OF FREQUENCY MODULATED SECTION

CAUTION: Make certain that the signal generator is accurately calibrated and is warmed up for at least a half hour before alignment is attempted.

INTERMEDIATE FREQUENCY (FM)

1. Set the Band Switch to the FM Position.

2. Rotate the gang condenser to its fully open position.

3. Remove 6J5 squelch tube.

4. Connect an extremely high input resistance VTVM across R22 in the grid return circuit of the 1st Limiter Tube (see Schematic Diagram Fig. 1). An alternative method would be to connect the VTVM to the test socket on the back of the chassis. (See test socket on Schematic Diagram, Fig. 1) Use a DC range of approximately 30 volts.

5. Connect the ground terminal on the signal generator output cable to the ground lug on the 6SG7 2nd I.F. tube socket. (See location diagram, Fig. 6)

6. Connect the high side of the signal generator output cable to the grid terminal (Pin #4) of the 6SG7 2nd I.F. tube socket using a 0.1 microfarad capacitor in series with it.

7. Feed in an unmodulated signal at 4.3 megacycles and align the primary and secondary trimmers of the 3rd I.F. transformer for peak reading on VTVM.

   NOTE: In the following steps, keep the reading on the VTVM below 10 volts by adjusting the signal generator output attenuator.

8. Move the signal generator output lead and the 0.1 microfarad capacitor in series with it to the grid terminal (pin No. 4) of the 6SG7 1st I.F. tube socket. Move the ground terminal on the output cable to this tube socket.

9. Align the primary and secondary trimmers of the 2nd I.F. transformer for peak reading on the VTVM.

©John F. Rider

Compliments of www.nucow.com

NOTE: DO NOT REPEAK ANY OF THE I.F. TRANSFORMERS ALREADY ALIGNED.

10. Move the signal generator output lead and the 0.1 microfarad capacitor in series with it to input grid (Pin No. 8) of the 6SA7 2nd converter tube socket.

11. Align the primary and secondary trimmers of the 1st I.F. transformer in the same manner.

12. Connect a zero center microammeter (100 microampere range each side of center) with a 0.5 megohm resistor in series with it across R30 in the discriminator load (from the junction of R28, R30 to ground).

13. Align the primary of the discriminator transformer by adjusting the primary trimmer for maximum reading on the zero center microammeter. (See location diagram, Fig. 7).

14. Remove the zero center microammeter from R30 and connect it across the entire discriminator load (Pin No. 4) of the 6H6 discriminator tube socket to ground. Use a 0.5 megohm resistor in series with high side of microammeter.

15. Align the secondary of the discriminator (See location diagram, Fig. 7) for zero reading on the zero center microammeter.

16. Vary the frequency of the signal generator by an equal amount on each side of resonance (approximately 75 KC) and make sure that the zero center microammeter reads the same value each side of center. If the same readings are not obtained on each side of center, it indicates that the discriminator transformer is not in perfect alignment and the primary and secondary should be realigned.

17. Move the signal generator output lead and the 0.1 microfarad capacitor in series with it to input grid (Pin No. 1) of the 6AG5 first converter tube. This can be accomplished by connecting the signal generator across C-7 (See location diagram, Fig. 7).

18. Introduce an unmodulated signal at 10.7 megacycles.

19. Adjust the iron core of the 6.4 mc. oscillator for peak reading (See location diagram, Fig. 6).

20. Align the primary and secondary iron cores of the 10.7 megacycle I.F. transformer for peak reading on the VTVM. (See location diagram, Fig. 6 and Fig. 7).

NOTE: Make certain that the peak reading on the VTVM occurs when the zero center microammeter reads zero.

RADIO FREQUENCY (FM)

1. Leave the high input resistance VTVM across R22 and the zero center microammeter across the discriminator load. Connect the high frequency signal generator to the FM antenna binding posts using a 150 ohm resistor in series with the high side of the signal generator output cable.

©John F. Rider

Compliments of www.nucow.com

MODELS 24, 37,
46, Ch. 100, 110

2. Set the receiver tuning dial to 92 megacycles.

3. Introduce an unmodulated signal at 92 megacycles.

CAUTION: The high frequency signal generator must be accurately calibrated and warmed up for at least a half hour.

4. Align the high frequency oscillator coil adjustable iron core for maximum reading on the VTVM. (See location diagram, Fig. 7).

NOTE: Make certain that the peak reading on the VTVM occurs when the zero center microammeter reads zero. This can be done by rocking the receiver tuning control slightly until zero is obtained on the microammeter. Keep the reading on the VTVM below 10 volts by reducing the signal generator input.

5. Introduce an unmodulated signal at 106 megacycles and set the FM dial pointer to 106 megacycles.

6. Align the high frequency oscillator trimmer capacitor C13 for peak reading on the VTVM. (See location diagram, Fig. 7). Make certain that the zero center microammeter reads zero when the receiver is tuned to the signal generator frequency.

7. Repeat steps 3 to 7, inclusive.

8. Align the R.F. trimmer capacitor C7 for peak reading on the VTVM in the same manner.

9. Align the antenna trimmer capacitor C1 for peak reading on the VTVM in the same manner. The peak reading on the VTVM should coincide with zero reading on the microammeter.

10. Replace 6J5 squelch tube.

ALIGNMENT OF AMPLITUDE MODULATED SECTION

INTERMEDIATE FREQUENCY (AM)

1. Set the band switch to the STANDARD BROADCAST POSITION.

2. Connect an output meter across the voice coil.

3. Rotate the gang condenser to its fully open position.

4. Rotate the volume control to its maximum clockwise position.

5. Rotate the bass control to its minimum position.

6. Connect the ground terminal on the standard signal generator to the ground lug on the 6SK7 I.F. tube socket.

7. Connect the high side of the signal generator output cable to the grid terminal (Pin No. 4) of the 6SK7 I.F. tube socket. Use a 0.1 microfarad capacitor in series.

©John F. Rider

Compliments of www.nucow.com

MODELS 24, 37, 46, Ch. 100, 110

8. Introduce a 455 KC signal modulated 30% at 400 cycles.

9. Align the secondary and primary trimmers of the output I.F. transformer for peak reading on the output meter.

NOTE: IN THE FOLLOWING STEPS KEEP THE OUTPUT METER READING BELOW 3 VOLTS BY ADJUSTING SIGNAL GENERATOR OUTPUT ATTENUATOR.

10. Move the signal generator output cable and the 0.1 microfarad capacitor in series with the high side to Pin No. 8 of the 6SA7 converter tube socket. This can be accomplished by connecting the signal generator output cable to the stator of the center section on the tuning condenser.

11. Align secondary and primary trimmers of the input I.F. transformer for peak reading on the output meter.

CAUTION: DO NOT REPEAK ANY OF THE I.F. TRANSFORMERS ALREADY ALIGNED.

RADIO FREQUENCY (STANDARD BROADCAST)

1. Set the ANT-LOOP Switch to the OUTSIDE ANT. position. (See location drawing).

2. Set the dial pointer to 1000 KC.

3. Connect the signal generator output cable to the AM antenna binding posts using a 200 mmfd. capacitor in series with the high side.

4. Introduce a 1000 KC signal modulated 30% at 400 cycles.

5. Align the oscillator coil adjustable iron core (See location diagram, Fig. 7) for peak reading on the output meter.

6. Set the dial pointer to 600 KC.

7. Introduce a 600 KC signal modulated 30% at 400 cycles.

8. Align the low end of the oscillator range by adjusting the padding capacitor, C54, for peak reading on output meter. (See location diagram, Fig. 7).

9. Align the ANTENNA and R.F. coils by adjusting the iron cores for peak reading.

10. Now rotate the gang condenser until the dial pointer reads "1500 KC".

11. Introduce a 1500 KC signal modulated 30% at 400 cycles.

12. Align the high end of the broadcast oscillator range by adjusting the oscillator trimmer C53 for peak reading on the output meter. (C53 is mounted on the gang condenser, see Fig. 7).

13. Align the ANTENNA and R.F. trimmer capacitors for peak reading. The R.F. trimmer capacitor C47 is mounted on the gang condenser. The antenna trimmer capacitor C38 is mounted under the chassis. (See location diagram, Fig. 6).

©John F. Rider

Compliments of www.nucow.com

MODELS 24, 37,
46, Ch. 100, 110

NOTE: It may be necessary, if the receiver is far out of alignment, to repeat steps 2 to 13 inclusive, since each of the adjustments is affected by the others.

14. Set the ANT-LOOP switch to LOOP position and align loop trimmer for peak reading on output meter. Use a broadcast station at approximately 1400 KC as a signal source.

SHORT WAVE (BAND #2)

1. Set the band switch to Short Wave Band #2.

2. Set the ANT-LOOP switch to the OUTSIDE ANTENNA position.

3. Set the dial pointer to 9.9 megacycles.

4. Turn chassis bottom side up.

5. Introduce a 9.9 megacycle signal modulated 30% at 400 cycles using a 400 ohm resistor in series with the signal generator output lead.

6. Align the S.W. #2 oscillator trimmer C51 for peak reading on the output meter. (See location diagram, Fig. 8).

7. Align the S.W. #2 antenna and R.F. trimmers for peak reading on the output meter.

SHORT WAVE (BAND #1)

1. Set the band switch to short wave band #1.

2. Set the dial pointer to 17.5 megacycles.

3. Introduce a 17.5 megacycle signal modulated 30% at 400 cycles.

4. Align the S.W. #1 oscillator trimmer C50 for peak reading on the output meter.

5. Align the S.W. #1 antenna and R.F. trimmers for peak reading on the output meter. (See location diagram, Fig. 8).

WAVE TRAP ALIGNMENT

1. Set the band switch to the standard broadcast position.

2. Set the dial pointer to 1000 kilocycles.

3. Introduce a strong 455 KC signal modulated 30% at 400 cycles into the antenna binding posts.

4. Adjust the wave trap trimmer C42 for MINIMUM reading on the output meter. (See location diagram, Fig. 8).

5. Set the ANT-LOOP switch back to LOOP position. Remove signal generator and output meter leads.

NOTE: The ANT-LOOP switch should be set in that position required for either OUTSIDE ANTENNA or LOOP depending upon which the customer is using.

©John F. Rider

Compliments of www.nucow.com

MODELS 24, 37, 46, Ch. 100, 110

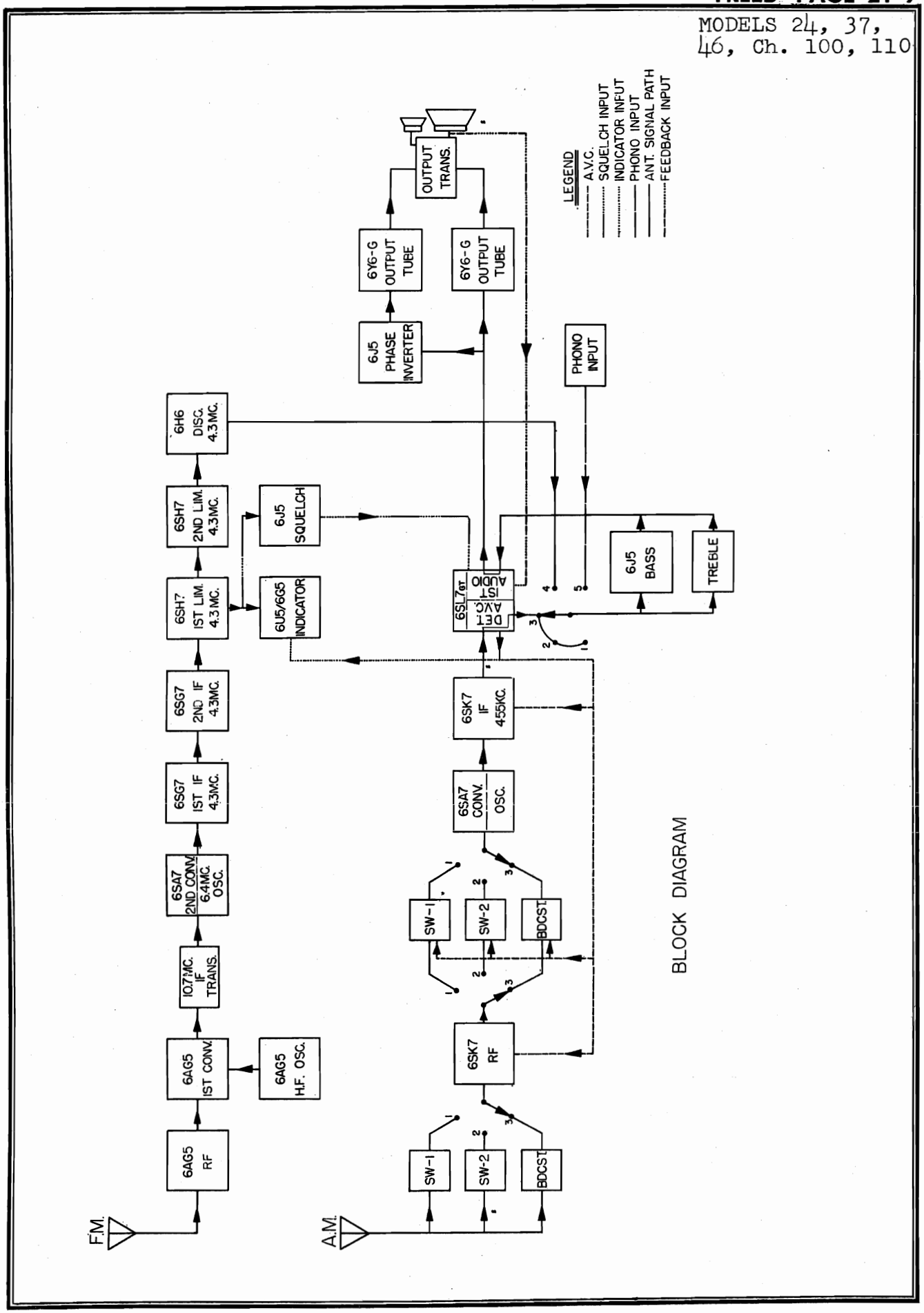

BLOCK DIAGRAM

©John F. Rider

Compliments of www.nucow.com

MODELS 24, 37,
46, Ch. 100, 110

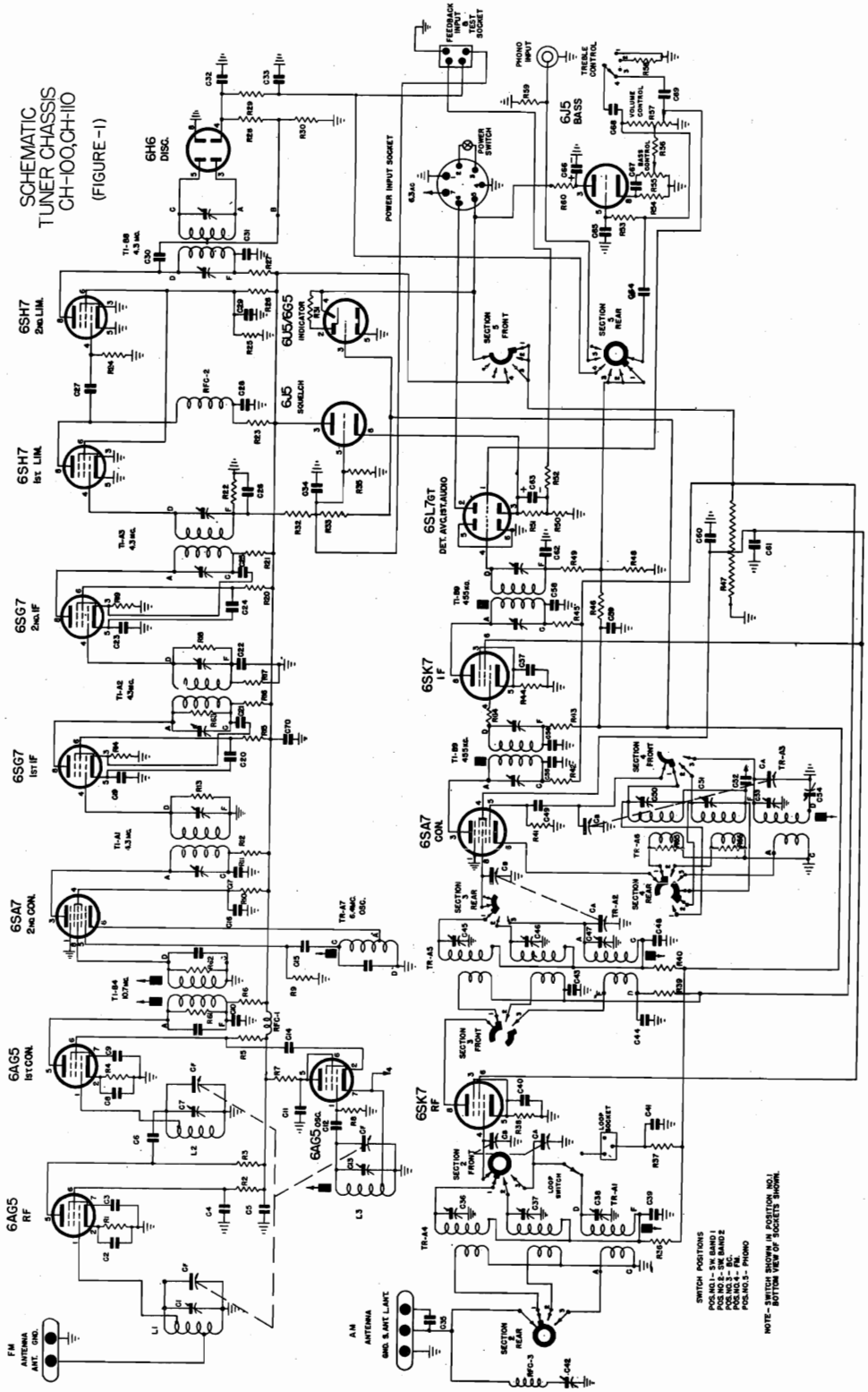

©John F. Rider

Compliments of www.nucow.com

MODELS 24, 37, 46, Ch. 100, 110

RESISTANCE VALUES
FOR
CH-100-110 SCHEMATIC

SYMBOL	VALUE	SYMBOL	VALUE	SYMBOL	VALUE
R-1	200 OHM	R-22	51 K	R-43	100 K
R-2	68 K	R-23	100 K	R-44	1000 OHM
R-3	10 K	R-24	24 K	R-45	3600 OHM
R-4	1000 OHM	R-25	22 K	R-46	1 Meg.
R-5	270 K	R-26	39 K, 1 W.	R-47	10 K, W.W.TAP. 5 K
R-6	1000 OHM	R-27	100 K	R-48	270 K
R-7	30 K	R-28	100 K	R-49	51 K
R-8	39 K	R-29	75 K	R-50	20 OHM
R-9	22 K	R-30	100 K	R-51	3600 OHM
R-10	15 K, 2 W.	R-31	1 Meg.	R-52	1500 OHM
R-11	3600 OHM	R-32	510 K	R-53	220 K
R-13	50 K	R-33	2.2 meg.	R-54	5100 OHM
R-14	200 OHM	R-35	1 Meg.	R-55	10 K, BASS
R-15	39 K	R-36	100 K	R-56	51 K
R-16	3600 OHM	R-37	100 K	R-57	500 K, VOL.
R-17	100 K	R-38	390 OHM	R-58	68 K
R-18	50 K	R-39	5100 OHM	R-59	1 Meg.
R-19	390 OHM	R-40	100 K	R-60	10 K
R-20	39 K	R-41	22 K	R-61	51 K
R-21	3600 OHM	R-42	3600 OHM	R-62	51 K
				R-63	51 K
				R-64	1000 OHM
				R-65	510 OHM
				R-66	200 OHM

NOTE:- ALL 1/2 WATT UNLESS OTHERWISE NOTED.

FIG. 2

©John F. Rider

Compliments of www.nucow.com

MODELS 24, 37,
46, Ch. 100, 110

CAPACITOR VALUES
FOR
CH-100-110 SCHEMATIC

SYMBOL	VALUE	SYMBOL	VALUE	SYMBOL	VALUE
C-1	1.5 to 7 mmfd Ceramic	C-24	.01 mfd Mica	C-47	4 - 30 mmfd Ceramic
C-2	510 mmfd Mica	C-25	.01 mfd Mica	C-48	.05 mfd, 400 V.
C-3	510 mmfd Mica	C-26	51 mmfd Ceramic	C-49	62 mmfd, Ceramic
C-4	.001 mfd Mica	C-27	51 mmfd Ceramic	C-50	4 - 30 mmfd Ceramic
C-5	.001 mfd Mica	C-28	.01 mfd Mica	C-51	4 - 30 mmfd Ceramic
C-6	51 mmfd Ceramic	C-29	.01 mfd Mica	C-52	.001 mfd Mica
C-7	1.5 to 7 mmfd Ceramic	C-30	100 mmfd Mica	C-53	4 - 30 mmfd Ceramic
C-8	.001 mfd Mica	C-31	.01 mfd Mica	C-54	200-600 mmfd Padder
C-9	.001 mfd Mica	C-32	100 mmfd Mica	C-55	.05 mfd, 400 V.
C-10	.01 mfd Mica	C-33	.001 mfd Mica	C-56	.05 mfd, 400 V.
C-11	.001 mfd Mica	C-34	.01 mfd Mica	C-57	.05 mfd, 400 V.
C-12	24 mmfd Ceramic	C-35	24 mmfd Ceramic	C-58	.05 mfd, 400 V.
C-13	1.5 to 7 mmfd Ceramic	C-36	4 - 30 mmfd Ceramic	C-59	.05 mfd, 400 V.
C-14	.001 mfd Mica	C-37	4 - 30 mmfd Ceramic	C-60	.05 mfd, 400 V.
C-15	51 mmfd Ceramic	C-38	4 - 30 mmfd Ceramic	C-61	.05 mfd, 400 V.
C-16	.01 mfd Mica	C-39	.05 mfd, 400 V.	C-62	100 mmfd Mica
C-17	.01 mfd Mica	C-40	.05 mfd, 400 V.	C-63	25 mfd, 50 Volt
C-19	.01 mfd Mica	C-41	.05 mfd, 400 V.	C-64	.05 mfd, 400 V.
C-20	.01 mfd Mica	C-42	10 - 80 mmfd, Trimmer	C-65	.005 mfd, 400 V.
C-21	.01 mfd Mica	C-43	.01 mfd, 400 V.	C-66	8 mfd, 450 V.
C-22	.01 mfd Mica	C-44	.05 mfd, 400 V.	C-67	.5 mfd, 400 V.
C-23	.01 mfd Mica	C-45	4 - 30 mmfd, Ceramic	C-68	.005 mfd, 400 V.
		C-46	4 - 30 mmfd, Ceramic	C-69	62 mmfd Ceramic
				C-70	.01 mfd Mica

FIG. 3

©John F. Rider

Compliments of www.nucow.com

MODELS 24, 37, 46, Ch. 100, 110

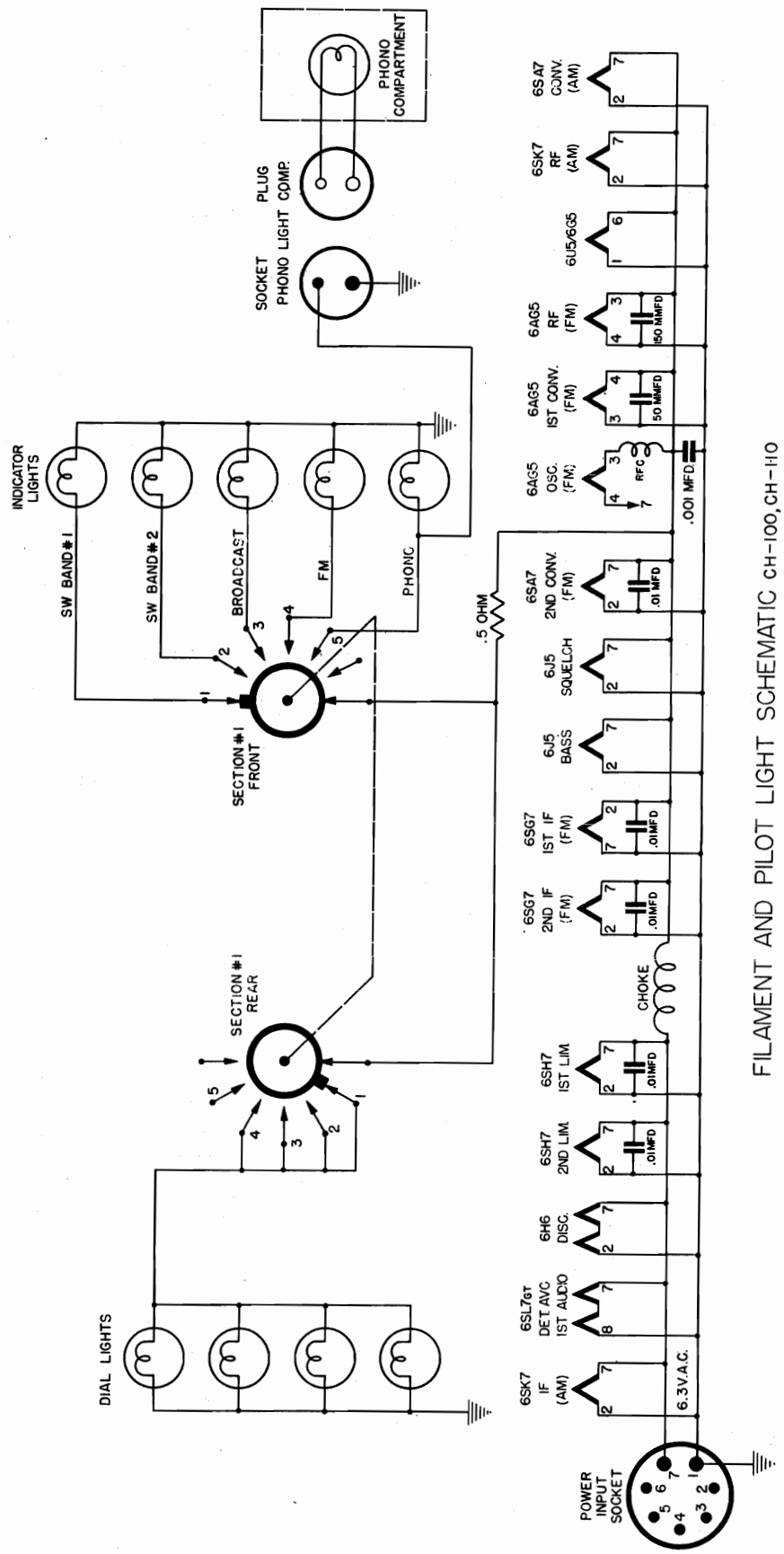

FILAMENT AND PILOT LIGHT SCHEMATIC CH-100, CH-110
(FIGURE 4)

©John F. Rider

Compliments of www.nucow.com

MODELS 24, 37,
46, Ch. 100, 110

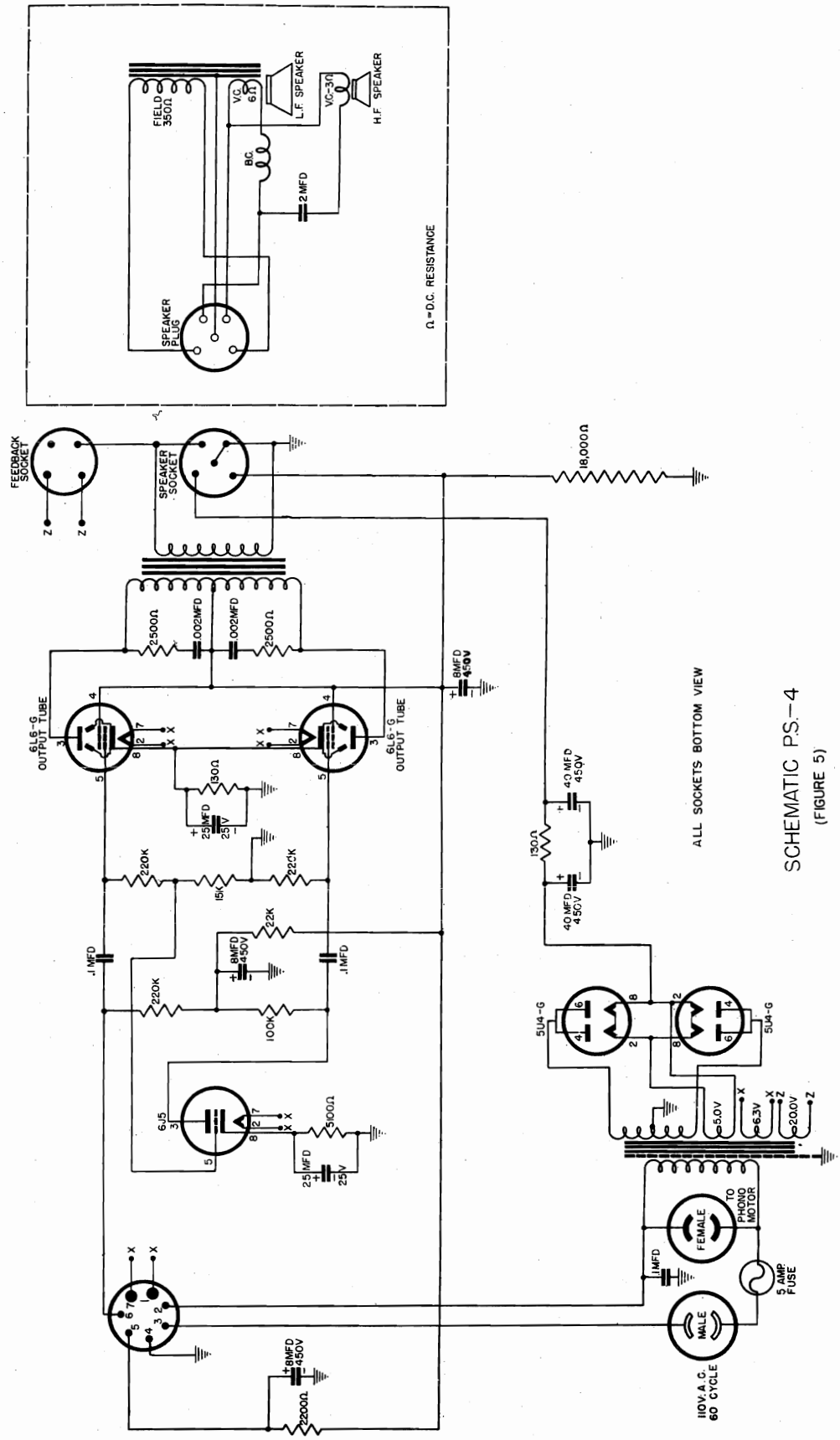

SCHEMATIC P.S.-4
(FIGURE 5)

©John F. Rider

Compliments of www.nucow.com

MODELS 24, 37, 46, Ch. 100, 110

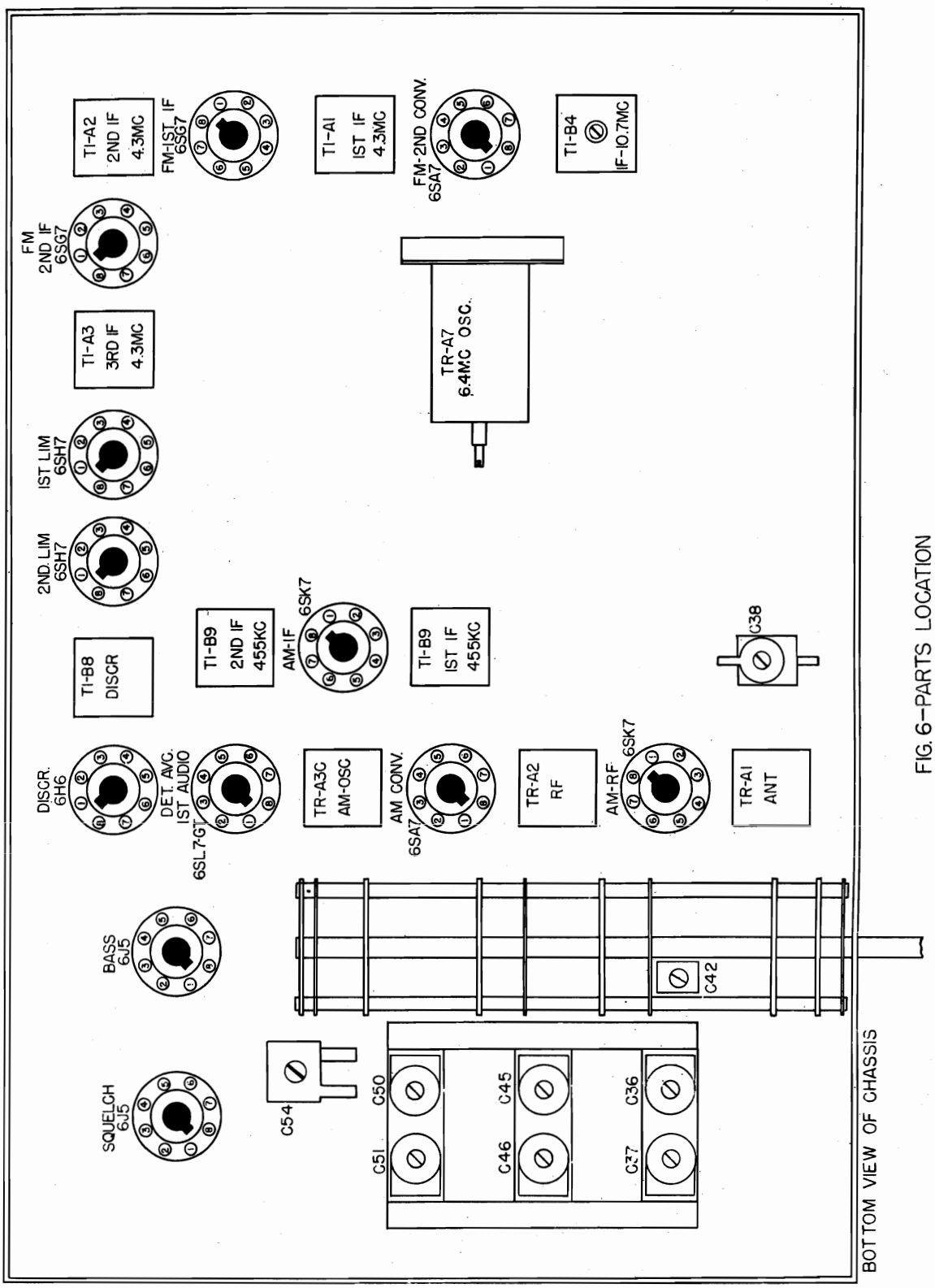

FIG. 6—PARTS LOCATION

©John F. Rider

Compliments of www.nucow.com

MODELS 24, 37,
46, Ch. 100, 110

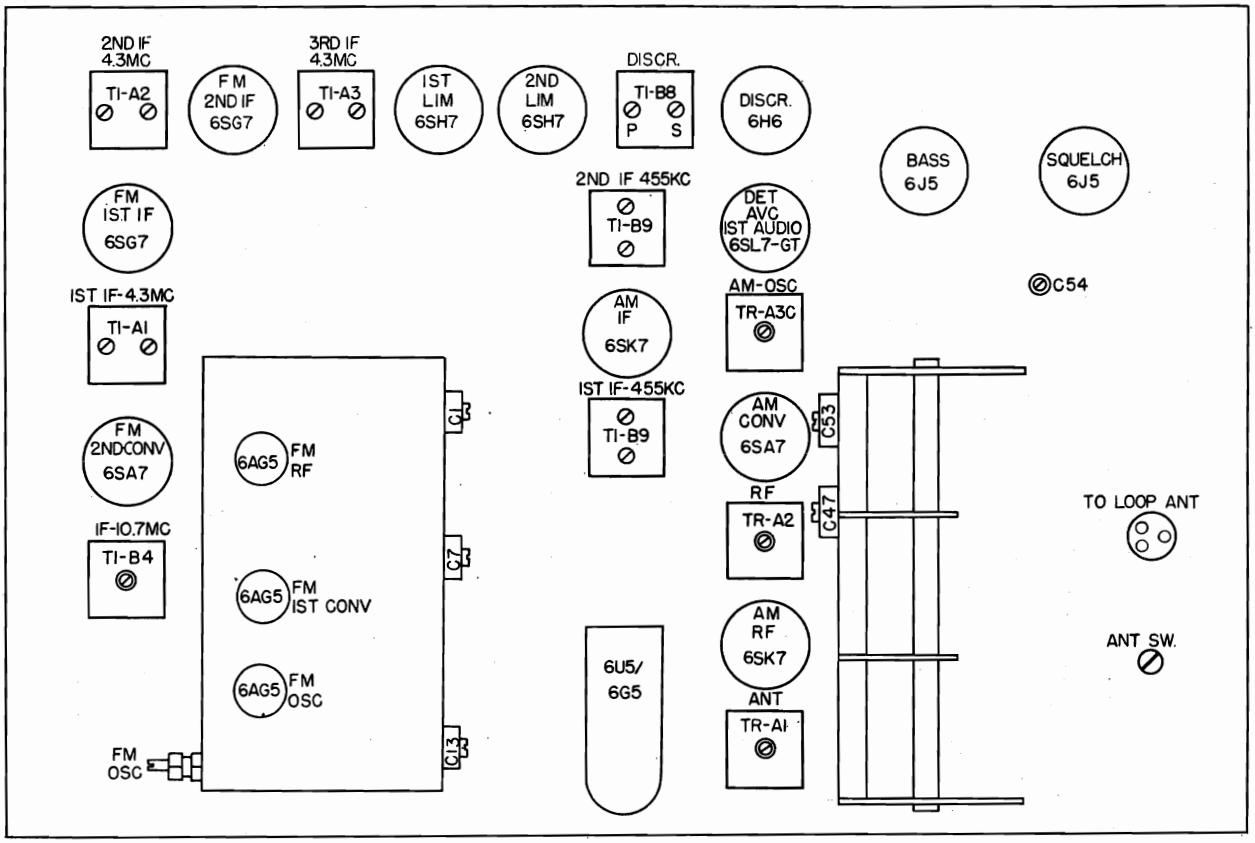

TOP VIEW OF CHASSIS

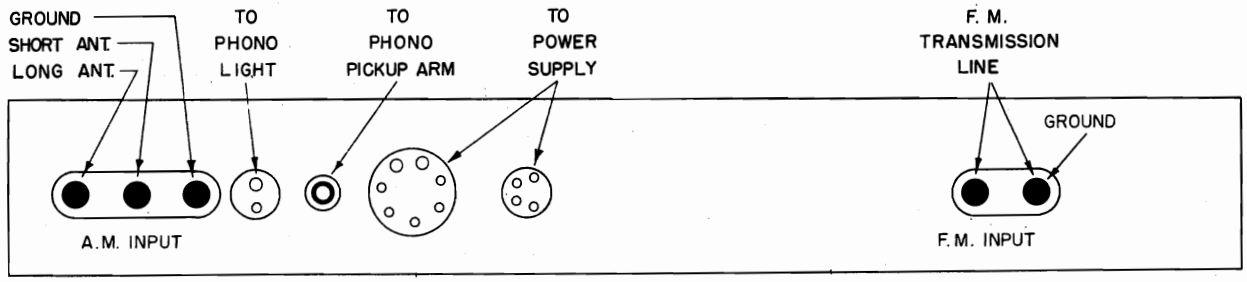

REAR VIEW OF CHASSIS

FIG.-7-PARTS LOCATION

©John F. Rider

Compliments of www.nucow.com

MODELS 24, 37, 46, Ch. 100, 110

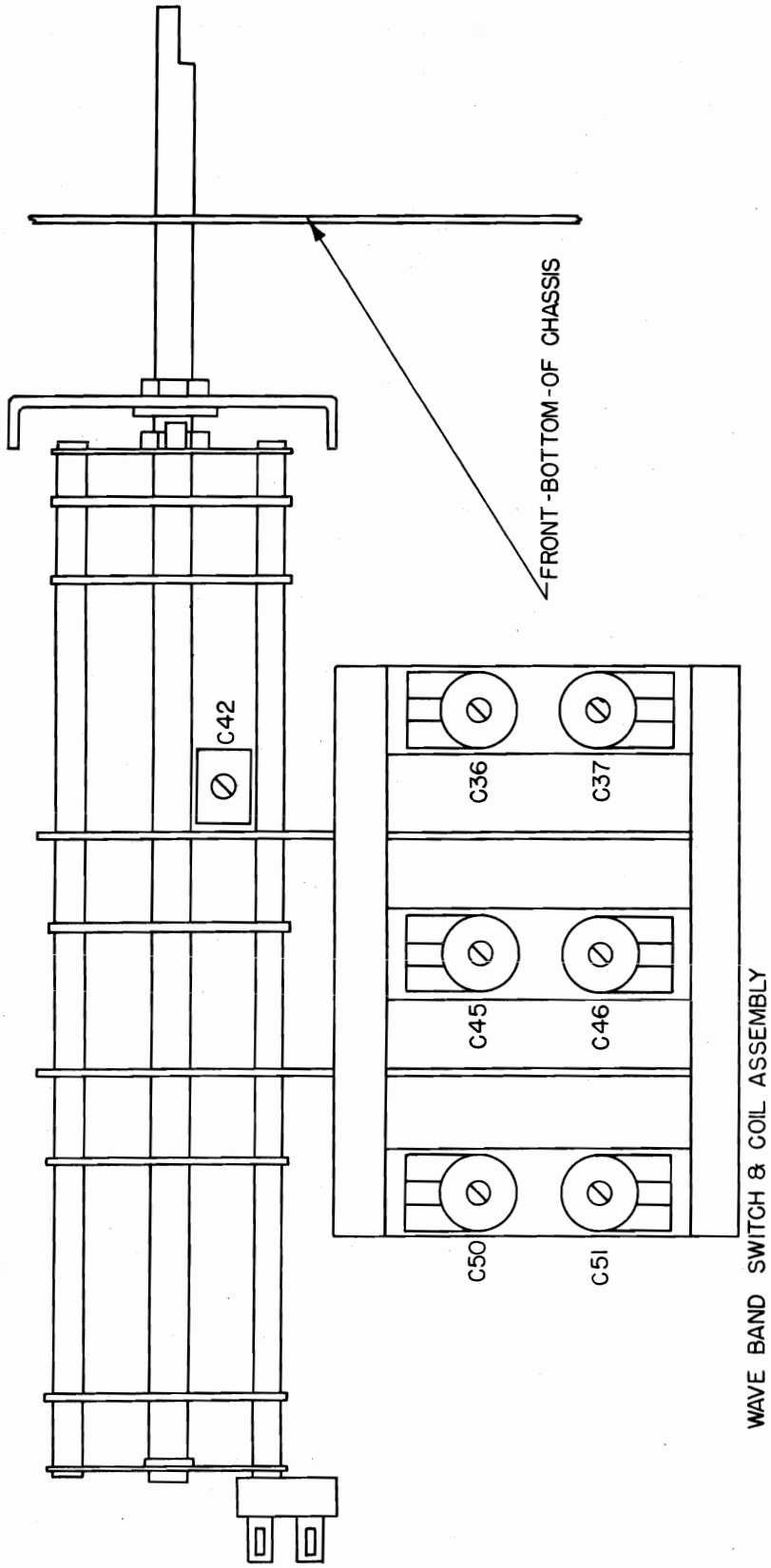

FIG. 8-PARTS LOCATION

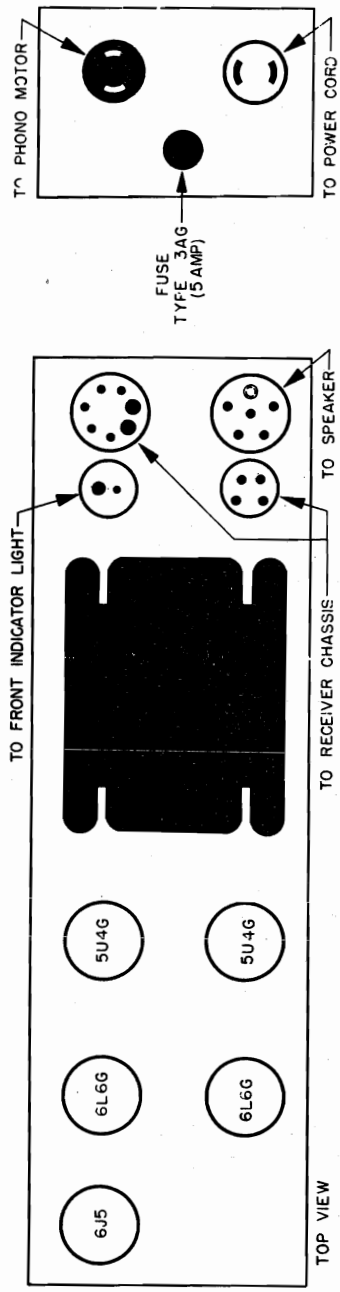

FIG. 9 --PARTS LOCATION P.S.-4

©John F. Rider

Compliments of www.nucow.com

MODELS 24, 37, 46, Ch. 100, 110

FIGURE 10-PARTS LOCATION P.S.-4

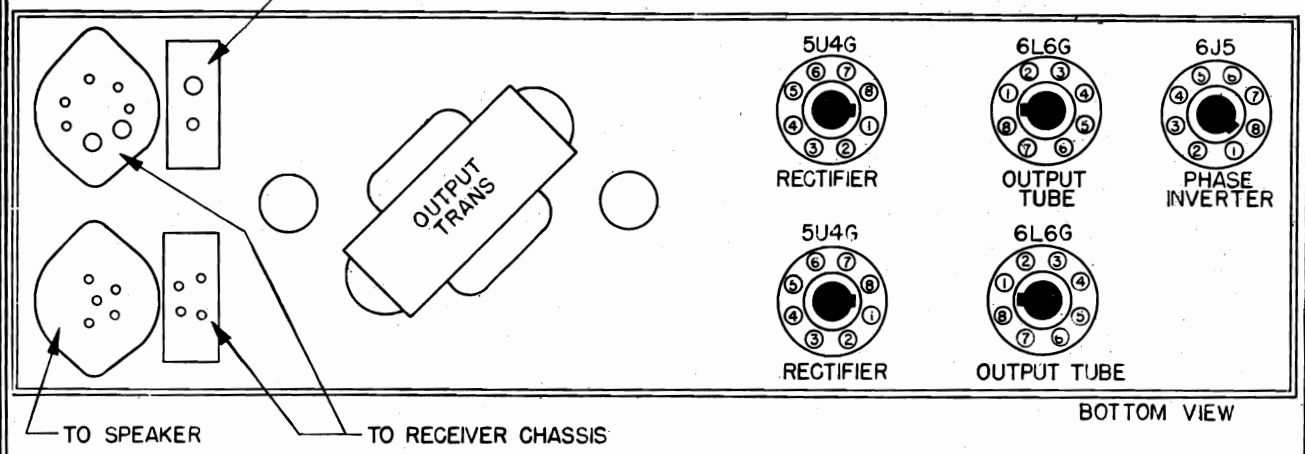

TABLE OF RESISTANCE MEASUREMENTS-TUNER CHASSIS CH-110

FIGURE 11

TUBE	FUNCTION	PLATE TO GROUND	SCREEN TO GROUND	CONTROL GRID TO GROUND	CATHODE TO GROUND
6SK7	AM-R.F.	9,000	4,000	1 MEG.	400
6SA7	AM-CONV.	9,000	4,000	1 MEG.	0
6SK7	AM-I.F.	9,000	4,000	1 MEG.	1,000
6SL7-GT	AM-DET. 1st AUDIO	0 250,000	--- ---	300,000 370,000	0 3,600
6J5	BASS AMP.	15,000	---	550,000	5,100
6AG5	FM-R.F.	20,000	75,000	0	200
6AG5	FM-1st CONV:	10,000	270,000	0	1,000
6AG5	FM-H.F.O.	40,000	---	40,000	0
6SA7	FM-2nd CONV.	12,000	22,000	0	0
6SG7	FM-1st I.F.	13,500	49,000	100,000	200
6SG7	FM-2nd I.F.	13,500	49,000	100,000	390
6SH7	1st LIMITER	110,000	15,000	51,000	0
6SH7	2nd LIMITER	110,000	15,000	24,000	0
6H6	DISCRIMINATOR	100,000	100,000	---	200,000
6J5-GT	INTERSTATION NOISE SUPPR.	10,000	---	300,000	3,600
6U5	TUNING INDICATOR	1 meg.	---	1 MEG.	0

©John F. Rider

Compliments of www.nucow.com

MODELS 24, 37, 46, Ch. 100, 110

FIGURE 12

TABLE OF RESISTANCE MEASUREMENTS - P.S. #4

TUBE	FUNCTION	PLATE TO GROUND	SCREEN TO GROUND	CONTROL GRID TO GROUND	CATHODE TO GROUND
6J5-GT	PHASE INV.	120,000	----	17,000	5,100
6L6-G	OUTPUT	7,000	7,000	220,000	130
6L6-G	OUTPUT	7,000	7,000	220,000	130
5U4-G	RECTIFIER	300	----	----	7,500
5U4-G	RECTIFIER	300	----	----	7,500

TABLE OF VOLTAGE MEASUREMENTS-TUNER CHASSIS CH-110

FIGURE 13

TUBE	FUNCTION	PLATE TO GROUND	SCREEN TO GROUND	CONTROL GRID TO GROUND	CATHODE TO GROUND	
6SK7	AM-R.F.	190	80	---	2.0	BAND SWITCH IN BROADCAST POSITION
6SA7	AM-CONV.	190	80	6.0 *	---	
6SK7	AM-I.F.	190	80	---	3.5	
6SL7-GT	1st AUDIO	100	---	---	1.4	
6J5	BASS AMP.	180	---	---	8.5	
6AG5	FM-R.F.	150	100	---	1.0	BAND SWITCH IN F. M. POSITION
6AG5	FM-1st CONV.	190	85	---	2.0	
6AG5	FM-H.F.O.	90	---	4.0 *	---	
6SA7	FM-2nd CONV.	180	85	12.0 *	---	
6SG7	FM-1st I.F.	170	105	---	1.75	
6SG7	FM-2nd I.F.	170	115	---	3.0	
6SH7	1st LIMITER	13	45	---	---	
6SH7	2nd LIMITER	45	45	---	---	
6H6	DISCRIMINATOR	---	---	---	---	
6J5-GT	INTERSTATION NOISE SUPPR.	190	---	---	6.5	
6U5	TUNING IND.	SUPPLY 190	---	---	---	

NOTE: Above values are measured with a 20,000 ohm per voltmeter and with no signal applied.

Measured with vacuum tube voltmeter and 1 megohm resistor in series with test prod.

©John F. Rider

Compliments of www.nucow.com

MODELS 24, 37,
46, Ch. 100, 110

FIGURE 14

TABLE OF VOLTAGE MEASUREMENTS - P.S. #4

TUBE	FUNCTION	PLATE TO GROUND	SCREEN TO GROUND	CONTROL GRID TO GROUND	CATHODE TO GROUND
6J5-GT	PHASE INV.	160	----	----	6.5
6L6-G	OUTPUT	300	300	----	20
6L6-G	OUTPUT	300	300	----	20
5U4-G	RECTIFIER	360 AC	----	----	400
5U4-G	RECTIFIER	360 AC	----	----	400

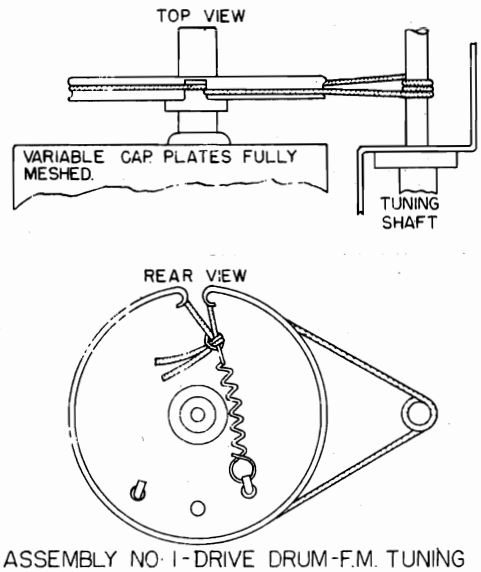

ASSEMBLY NO. 1 - DRIVE DRUM - F.M. TUNING

FIGURE 15A

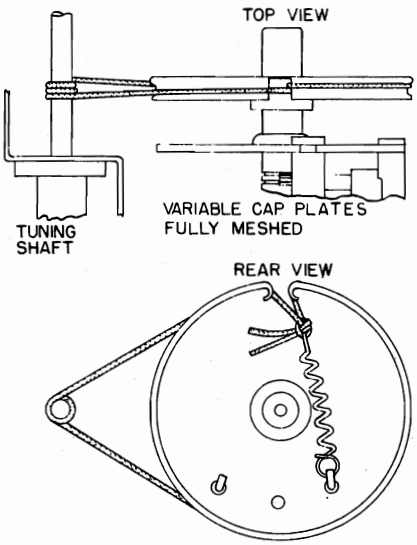

ASSEMBLY NO. 2 - DRIVE DRUM - A.M. TUNING

FIGURE 15B

©John F. Rider

Compliments of www.nucow.com

MODELS 24, 37, 46, Ch. 100, 110

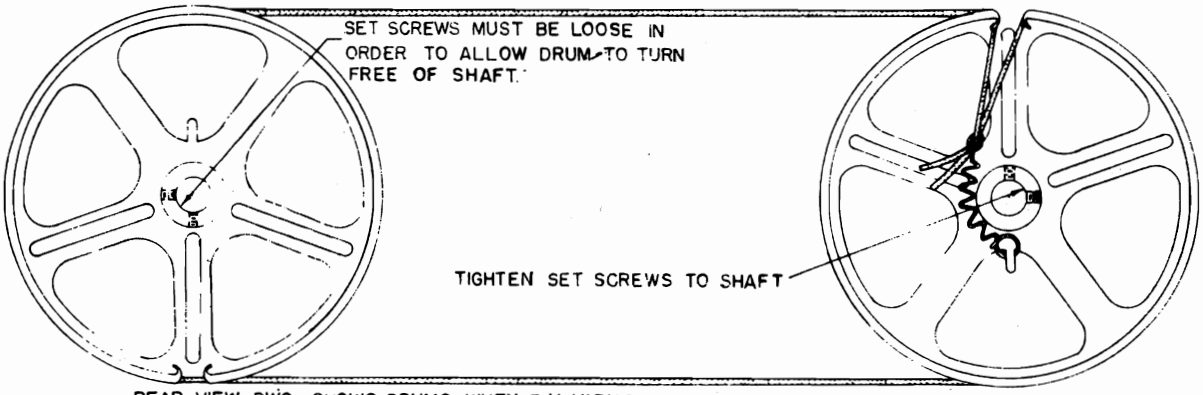

REAR VIEW-DWG. SHOWS DRUMS WHEN F.M. VARIABLE CAP. PLATES ARE FULLY MESHED

ASSEMBLY NO. 3- DIAL DRUM-F.M. TUNING

FIGURE 15C

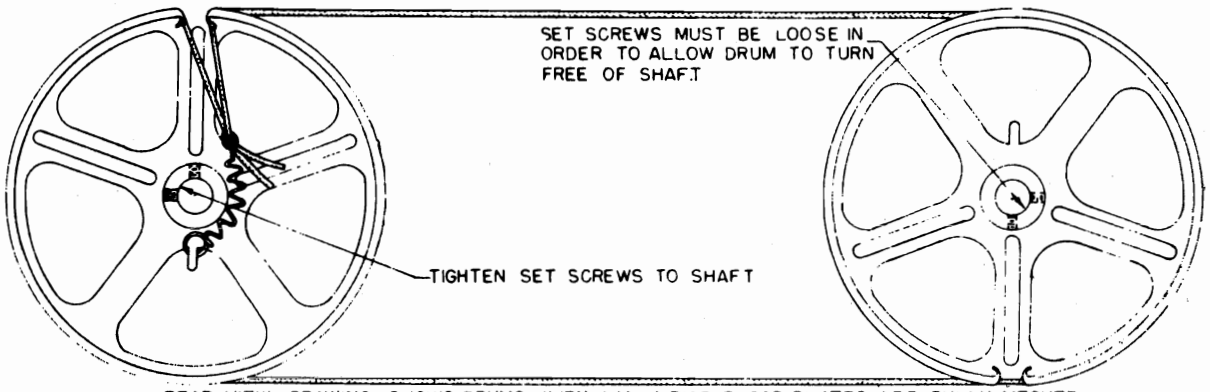

REAR VIEW-DRAWING SHOWS DRUMS WHEN A.M. VARIABLE CAP. PLATES ARE FULLY MESHED

ASSEMBLY NO 4- DIAL DRUM-A.M TUNING

FIGURE 15D

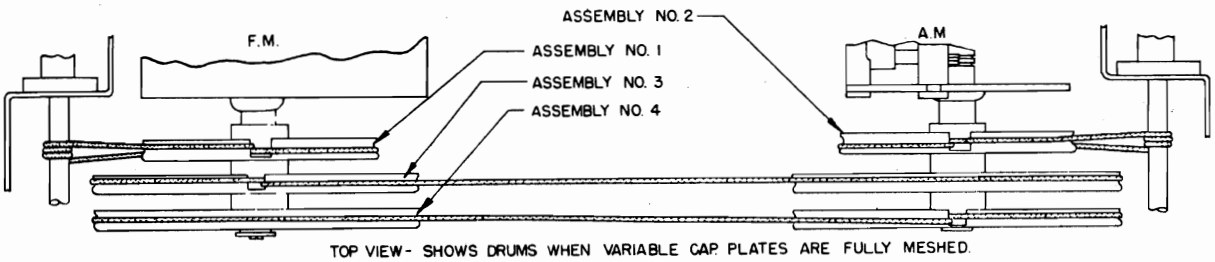

TOP VIEW- SHOWS DRUMS WHEN VARIABLE CAP. PLATES ARE FULLY MESHED.

NOTE: SEE ASSEMBLY DETAIL DRAWINGS FOR PROPER ASSEMBLY SEQUENCE

DIAL CABLE ASSEMBLY

FIGURE 15E

©John F. Rider

Compliments of www.nucow.com

MODELS 24, 37,
46, Ch. 100, 110

FIGURE 16

REPLACEMENT PARTS LIST
CH-110 Tuner

PART NO.	DESCRIPTION
A-A11	Pointer, AM
A-A45	Pointer, FM
LC-B1	Loop, AM
LC-A2	Choke, R.F., 1 Mh.
ND-D4	Dial, Glass
OK-A1	Knob
PL-A1	Plug for Phono Motor
PL-A2	Plug for Line Cord
RVC-A1	Volume Control
RVC-A2	Bass Control
RW-A1	Resistor, Wire Wound
SR-B1	Switch, Wave Band
SR-A2	Switch, Treble Control
SR-A3	Switch, Ant-Loop
TI-A1	Transformer, I.F., 4.3 Mc., Input
TI-A2	Transformer, I.F., 4.3 Mc., Interstage
TI-A3	Transformer, I.F., 4.3 Mc., Output
TI-B4	Transformer, I.F., 10.7 Mc.
TI-B8	Discriminator, FM, 4.3 mc.
TI-B9	Transformer, I.F., 455 KC.
TR-A1	Coil, Antenna, AM
TR-A2	Coil, R.F., AM
TR-A3	Coil, Oscillator, AM
TR-A4	Coil, Antenna, Short Wave
TR-A5	Coil, R.F., Short Wave
TR-A6	Coil, Oscillator, Short Wave
TR-A7	Coil, Oscillator, FM
W-A6	Cable, 7-wire Power Supply

Power Supply #4

PART NO.	DESCRIPTION
CE-A2	Capacitor, Electrolytic
QSD-A6	Speaker, 12"
QSD-A4	Speaker, 5"
RW-A2	Resistor, Wire Wound, 2200 Ohms
RW-A3	Resistor, Wire Wound, Bleeder
RW-A4	Resistor, Wire Wound, 130 Ohms
TP-C1	Transformer, Power

NOTE: SPECIAL REPLACEMENT ITEMS LISTED. PARTS NOT LISTED MAY BE OBTAINED FROM FREED RADIO CORPORATION.

©John F. Rider

Compliments of www.nucow.com

MODEL 94RA1-43-8510B,
94RA1-43-8511B

ELECTRICAL SPECIFICATIONS

Power Consumption —
117 volts AC—35 Watts

Power Output —
1.5 watts maximum
.9 watts 10% distortion

Speaker—5″ PM dynamic

Frequency Ranges —
Broadcast 540-1600 KC
Frequency modulation 88-108 MC

Intermediate Frequency —
AM 455 KC — FM 10.7 MC

Selectivity — AM — 60 KC broad at 1000 times signal, measured at 1000 KC

I.F. FM—200 KC broad at 2 times down

I.F. FM — 700 KC broad at 200 times down

AM Sensitivity—(For .5 watt output with external antenna)
10 microvolts average

FM Sensitivity—(For .5 watt output)
100 microvolts average

GENERAL DESCRIPTION

This radio is a 7 tube (including rectifier tube) AC receiver designed for reception of stations in the standard broadcast band between 540 and 1600 kilocycles and FM (Frequency Modulation) stations in the newly allocated FM Band of 88 - 108 megacycles. Controls are provided on the front panel for tuning, tone, volume and band or phono selection. Special features include a built-in loop antenna for broadcast reception, a hank antenna for the reception of FM stations, automatic volume control, compensator circuits to prevent oscillator drift, beam power output stage, permanent magnet dynamic speaker and an electrostatic shield in the power transformer to reduce power line noise. A socket labeled PHONO is provided on the back of the chassis to which an external record player may be connected.

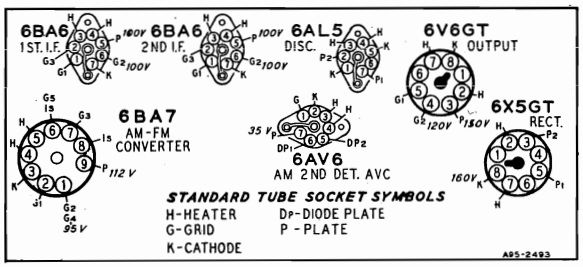

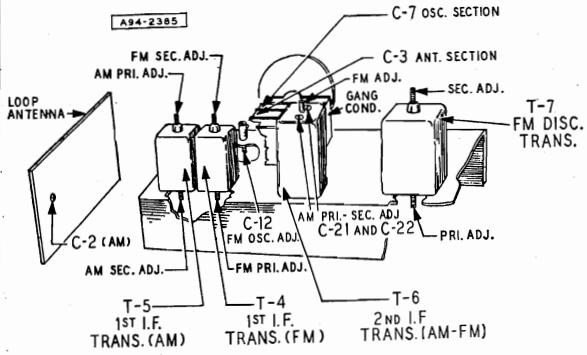

TUBE SOCKET VOLTAGES

Socket voltages are shown on the Bottom Socket diagram at the tube socket terminals. All voltages are between the socket terminal and chassis ground. Plate, screen and cathode voltages were taken with a 1000 ohm-per-volt meter with a 300 volt scale used for plate and screen voltages. Audio grid voltages were read with a vacuum tube volt-meter. Conditions of measurement are:

Line voltage .....117 Volts AC
Signal Input .....None
A Variation of ±10% is usually permissible.

©John F. Rider

Compliments of www.nucow.com

MODEL 94RA1-43-8510B,
94RA1-43-8511B

SERVICE DATA

ALIGNMENT PROCEDURES

AM STAGES

Volume Control Maximum all Adjustments.

Connect Radio Chassis to Ground Post of Signal Generator with a Short Heavy Lead.

Allow Chassis and Signal Generator to "Heat Up" for Several Minutes.

The following is required for aligning:

An All Wave Signal Generator Which Will Provide an Accurately Calibrated Signal at the Test Frequencies as Listed.

Output Indicating Meter, Non-Metallic Screwdriver, Dummy Antennas — .1 mf, and 50 mmf.

SIGNAL GENERATOR					
FREQUENCY SETTING	CONNECTION AT RADIO	GROUND CONNECTION	DUMMY ANTENNA	GANG CONDENSER SETTING	ADJUST TUNING SLUGS AND TRIMMERS
455 KC	Control Grid 1st 6BA6 Pin No. 1	Chassis Base	.1 mf	Turn Rotor to Full Open	2nd I.F. C-21 & C-22
455 KC	Control Grid 6BA7 Pin No. 7 1st Det.	Same as above	.1 mf	Turn Rotor to Full Open	1st I.F. Pri. & Sec.
1620 KC	Control Grid 6BA7 Pin No. 7	Same as above	.1 mf	Turn Rotor to Full Open	Oscillator C-7
1400 KC	External Antenna Clip	Same as above	50 mmf	Turn Dial to 1400 KC. See Note A	Antenna C-2

NOTE A—Set pointer at the 1400 KC mark on the dial scale. Attach pointer to drive cord.

FM STAGES

Allow chassis and signal generator to warm up for several minutes.

The following equipment is required for aligning:

An accurately calibrated signal generator providing unmodulated signals at the test frequencies listed below.

Non-metallic screwdriver.

Dummy Antennas and I-F Loading Resistor—2500 mmf, 300 ohms and a 3300 ohm .5 watt resistor with short leads.

Zero center scale DC vacuum tube voltmeter having a range of approximately 3 volts.

(If a zero center scale meter is not available, a standard scale vacuum tube voltmeter may be used by reversing the meter connections for negative readings.)

	SIGNAL GENERATOR					
	FREQUENCY SETTING	CONNECTION AT RADIO	DUMMY ANTENNA	BAND SWITCH SETTING	CONDENSER SETTING	ADJUSTMENT FOR MAX. METER DEFLECTION
Discriminator	10.7 MC	6BA6 2nd I-F Pin 1 & Chassis	2500 mmf	FM	Rotor Fully Open	Disc. Pri. Note A
	10.7 MC	Same as above	2500 mmf	FM	Rotor Fully Open	Disc. Sec. Note B
	10.7 MC	Same as above	2500 mmf	FM	Rotor Fully Open	Disc. Pri. Note A
	10.7 MC	Same as above	2500 mmf	FM	Rotor Fully Open	Disc. Sec. Note B
I-F	10.7 MC Note E	6BA6 1st I-F Pin 1 & Chassis	2500 mmf	FM	Rotor Fully Open	2nd I-F Note C
Discriminator	10.7 MC	6BA6 2nd I-F Pin 1 & Chassis	2500 mmf	FM	Rotor Fully Open	Disc. Pri. Note A
I-F	10.7 MC	Antenna and Chassis	2500 mmf	FM	Rotor Fully Open	1st. I-F Pri. and Sec. and Note C
	10.7 MC	Antenna and Chassis Solder a 3300 ohm resistor across terminals 3 and 4 of 1st. I-F trans.	2500 mmf	FM	Rotor Fully Open	1st. I-F Pri. Note C
	10.7 MC	Antenna and Chassis Note D	2500 mmf	FM	Rotor Fully Open	1st. I-F Sec. Note C
RECHECK I-F ADJUSTMENTS IN ORDER GIVEN						
Oscillator	108.4 Note F	Disconnect hank antenna and connect generator to dipole terminals with resistor in series	300 ohms	FM	Rotor Fully Open	Osc. C-12
Antenna	104.5	Same as above	300 ohms	FM	Tune rotor for max. AVC voltage	Ant. C-3

RECHECK ANTENNA & OSC. ADJUSTMENTS IN ORDER GIVEN

FM ALIGNMENT NOTES

NOTE A—The zero center scale DC vacuum tube voltmeter is to be connected between chassis ground and the AVC line. A signal of .1 volt must be fed into the receiver for this adjustment.
Note output voltage on the zero center DC vacuum tube voltmeter.

NOTE B—Disconnect zero center DC vacuum tube voltmeter from AVC and connect it to the audio takeoff point at the 27 K ohm resistor (R-11) and its junction with the terminal strip. Adjust for zero voltage indication.

NOTE C—Connect zero center DC vacuum tube voltmeter as in Note A. Adjust input to give same output on the zero center DC vacuum tube voltmeter as in Note A.

NOTE D—Unsolder 3300 ohm resistor from terminals 3 and 4 of 1st I-F transformer and resolder across terminals 1 and 2.

NOTE E—2nd I-F Trimmers (AM) must be aligned before attempting to adjust 2nd I-F (FM) tuning slug.

NOTE F—Remove the 3300 ohm load resistor before attempting to check the antenna and oscillator adjustments.

©John F. Rider

Compliments of www.nucow.com

Tube and Dial Lamp Complement

1 6BA7 FM-AM Converter
1 6BA6 1st I-F Amplifier
1 6BA6 2nd I-F Amplifier
1 6AL5 FM Discriminator
1 6AV6 Audio Amplifier, AM 2nd Detector and AVC
1 6V6GT Audio Output
1 6X5GT Rectifier
1 No. 47 Dial Lamp

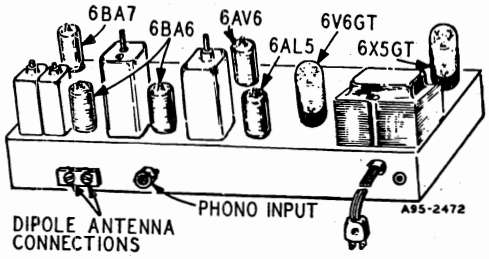

DRIVE CORD REPLACEMENT

Replacement of the drive cord may be accomplished as shown in the illustration. For this purpose use the new drive cord assembly listed in the Replacement Parts List. Turn the gang condenser until the plates are fully meshed. Then install the string as shown, winding three turns clockwise around the tuning shaft with the turns progressing away from the chassis. After the cord is installed, rotate the tuning shaft several times in order to take up any slack in the cord.

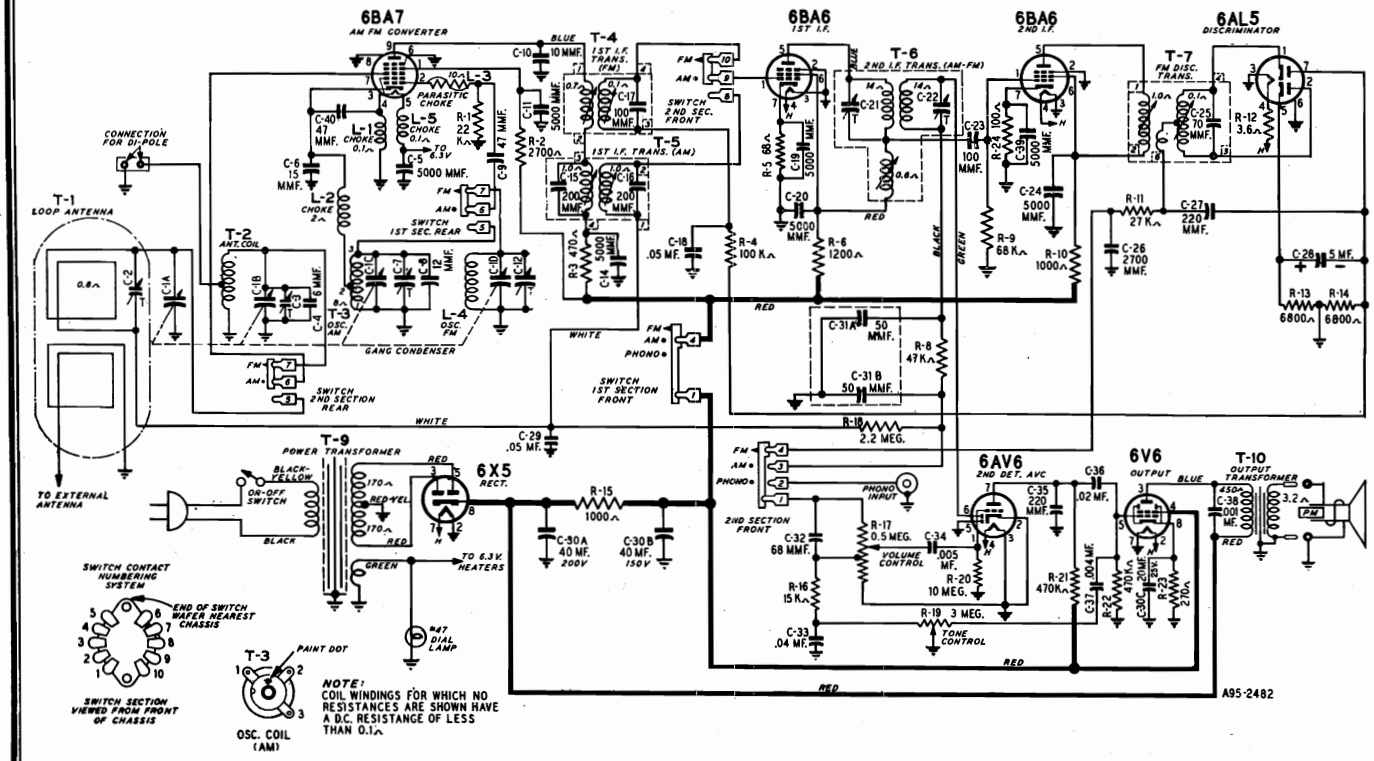

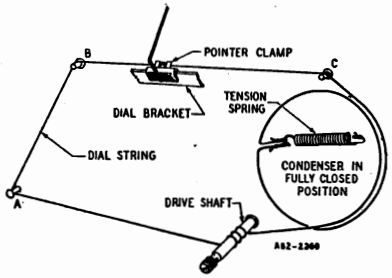

©John F. Rider
Compliments of www.nucow.com

MODEL 94RA1-43-8510B,
94RA1-43-8511B

REPLACEMENT PARTS LIST

Ref. No.	DESCRIPTION	Part No.
	CAPACITORS	
C-1	Gang Condenser & Pulley	14A204
C-2	Capacitor, Trimmer; 2-24 mmf	17A256
C-3, C-7	Part of C-1 (Gang Condenser)	
C-4	Capacitor, Ceramic; 6 mmf	47X521
C-5, C-11, C-14, C-19, C-20, C-24, C-39	Capacitor, Ceramic; 5000 mmf	47X507
C-6	Capacitor, Ceramic; 15 mmf	47X552
C-8	Capacitor, Ceramic; 12 mmf	47X522
C-9	Capacitor, Ceramic; 47 mmf ± 10%	47X517
C-10	Capacitor, Ceramic; 10 mmf	47X512
C-12	Capacitor, Trimmer; 1-8 mmf	17A255
C-15, C-16	Part of T-5 (1st I-F Trans. AM)	
C-17	Part of T-4 (1st I-F Trans. FM)	
C-18, C-29	Capacitor, Tubular; .05 mf 200 V	B66503
C-21, C-22	Part of T-6 (2nd I-F Trans. AM-FM)	
C-23	Capacitor, Ceramic; 100 mmf	47X476
C-25	Part of T-7 (FM Disc. Trans.)	
C-26	Capacitor, Molded Mica; 2700 mmf	47X492
C-27, C-35	Capacitor, Ceramic; 220 mmf	47X468
C-28	Capacitor, Dry Electrolytic; 5 mf 100 V	45X361
C-30A, C-30B, C-30C	Capacitor, Dry Electrolytic; 40 mf 200 V, 40 mf 150 V, 20 mf 25 V	45X360
C-31A, C-31B	Capacitor, Dual Mica; 50-50 mmf	47X112
C-32	Capacitor, Molded Mica; 68 mmf	47X471
C-33	Capacitor, Tubular; .04 mf 200 V	B66403
C-34	Capacitor, Tubular; .005 mf 400 V	D66502
C-36	Capacitor, Tubular; .02 mf 400 V	D66203
C-37	Capacitor, Tubular; .004 mf 200 V	B66402
C-38	Capacitor, Tubular; .001 mf 800 V	H66102
C-40	Capacitor, Ceramic; 47 mmf ± 20%	47X509
	RESISTORS	
R-1	Resistor, Carbon; 22K ohms 0.5 W	B84223
R-2	Resistor, Carbon; 2700 ohms 0.5 W	B84272
R-3	Resistor, Carbon; 470 ohms 0.5 W	B84471
R-4	Resistor, Carbon; 100K ohms 0.5 W	B85104
R-5	Resistor, Carbon; 68 ohms 0.5 W	B83680
R-6	Resistor, Carbon; 1200 ohms 0.5 W	B85122
R-8	Resistor, Carbon; 47K ohms 0.5 W	B85473
R-9	Resistor, Carbon; 68K ohms 0.5 W	B84683
R-10	Resistor, Carbon; 1000 ohms 0.5 W	B85102
R-11	Resistor, Carbon; 27K ohms 0.5 W	B85273
R-12	Resistor, Wirewound; 3.6 ohms 0.5 W	43X233
R-13, R-14	Resistor, Carbon; 6800 ohms 0.5 W	B84682
R-15	Resistor, Carbon; 1000 ohms 2.0 W	D84102
R-16	Resistor, Carbon; 15K ohms 0.5 W	B85153
R-17	Volume Control & Switch; .5 megohm	36X372
R-18	Resistor, Carbon; 2.2 megohms 0.5 W	B85225
R-19	Tone Control; 3 megohms	40X285
R-20	Resistor, Carbon; 10 megohms 0.5 W	B85106
R-21, R-22	Resistor, Carbon; 470K ohms 0.5 W	B85474
R-23	Resistor, Carbon; 270 ohms 0.5 W	B84271
R-24	Resistor, Carbon; 100 ohms 0.5 W	B84101

Ref. No.	DESCRIPTION	Part No.
	TRANSFORMERS AND COILS	
L-1, L-5	Choke, Filament	9A2044
L-2	Choke, Insulated 2 uh.	35A5
L-3	Choke, Parasitic	9A1940
L-4	Coil, Oscillator (FM)	9A2021
T-1	"B" Range Loop Antenna Assembly	9A2040
T-2	Coil, Antenna	9A1956
T-3	Coil, Oscillator (AM)	9A1997
T-4	1st I-F Trans. (FM)	9A2037
T-5	1st I-F Trans. (AM)	9A2038
T-6	2nd I-F Trans. (AM-FM)	9A1999
T-7	Discriminator Coil Assembly	9A2036
T-9	Power Transformer	53X291
T-10	Output Transformer (See Miscellaneous)	
	DIAL AND TUNING PARTS	
	Diffuser & Clamp Assembly	25A1044
	consisting of:	
	Diffuser Clamp	30X541
	Diffuser	41X82
	Rubber Grommets (mtg. Gang Cond.)	6X67
	Pointer	15X236
	Crystal	17X100
	"C" Washer (Drive Shaft)	19X192
	Condenser Cushion Stud	20X260
	Drive Shaft	26X486
	Drive Cord Tension Spring	28X113
	Dial Clamp	30X532
	Dial Glass (Brown Cabinet)	58X712
	Dial Glass (Ivory Cabinet)	58X713
	Dial Bracket Assembly	S-25X28
	consisting of:	
	Rivet	20X1580
	Dial Bracket	25X1606
	MISCELLANEOUS	
	Band Change Switch	2A375
	Tube Socket, Molded (Octal)	3A303
	Phono Socket (Single Pin)	3A305
	Tube Socket (Miniature)	3A426
	Tube Socket (AM-FM Converter)	3A443
	No. 47 Pilot Light	7A103
	Pilot Light Socket Assembly	7A216
	Knob (Tuning) (Brown Cabinet)	10A699
	Knob (Off-Volume) (Brown Cabinet)	10A700
	Knob (Tone) (Brown Cabinet)	10A701
	Knob (FM-BC-PH) (Brown Cabinet)	10A702
	Knob (Tuning) (Ivory Cabinet)	10A703
	Knob (Off-Volume) (Ivory Cabinet)	10A704
	Knob (Tone) (Ivory Cabinet)	10A705
	Knob (FM-BC-PH) (Ivory Cabinet)	10A706
	Speaker, 5" P.M. with Output Transformer	12A493
	Drive Cord Assembly	10X68
	Line Cord & Plug Assembly	13X546
	Line Cord Clamp	30X547
	Grille Cloth (Ivory Cabinet)	14X444
	Grille Cloth (Brown Cabinet)	14X445
	Speaker Baffle	14X463
	Cabinet (Ivory)	55X338
	Cabinet (Brown)	55X339

©John F. Rider

Compliments of www.nucow.com

MODEL 94RA2-43-8230A

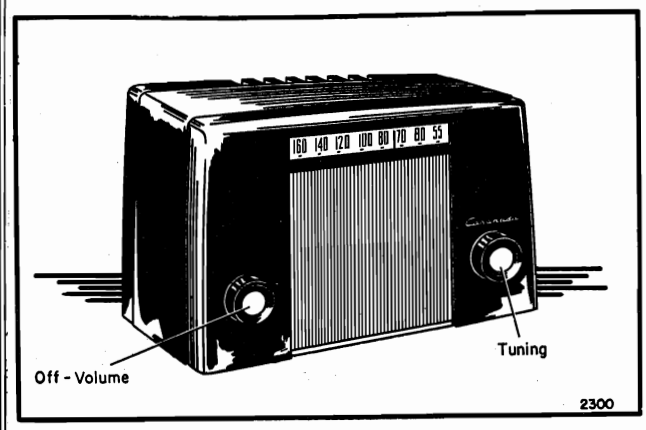

SERVICE DATA

POWER SUPPLY.....105 to 125 volts, DC or 50-60 cycle AC, 24 watts.
FREQUENCY RANGE.....535 to 1620 Kc.
INTERMEDIATE FREQ....455 Kc.
SELECTIVITY.....At 1000 Kc., 60 Kc. at 1000 x signal.
SENSITIVITY.....150 u. v. per meter.
POWER OUTPUT.....0.8 watt undistorted, 1.0 watt max.
LOUD SPEAKER.....4" round PM., v. c. impedance 3.2 ohms.
TUBE COMPLEMENT.....
12BE6, Converter.
12BD6, IF Amplifier.
12AT6, Detector, AVC, Audio.
50C5, Output Amplifier.
35W4, Rectifier.

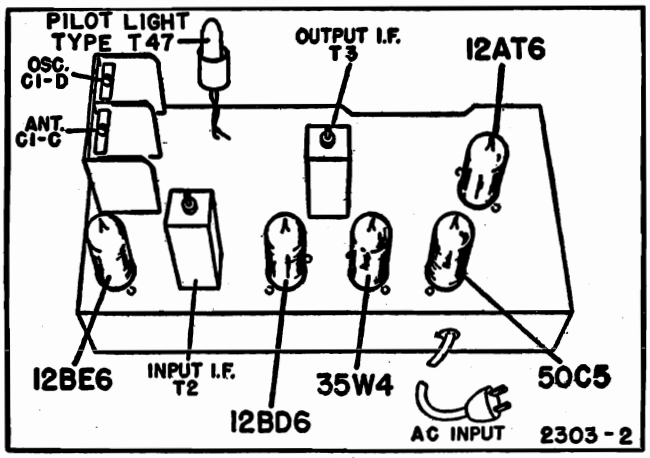

Chassis View

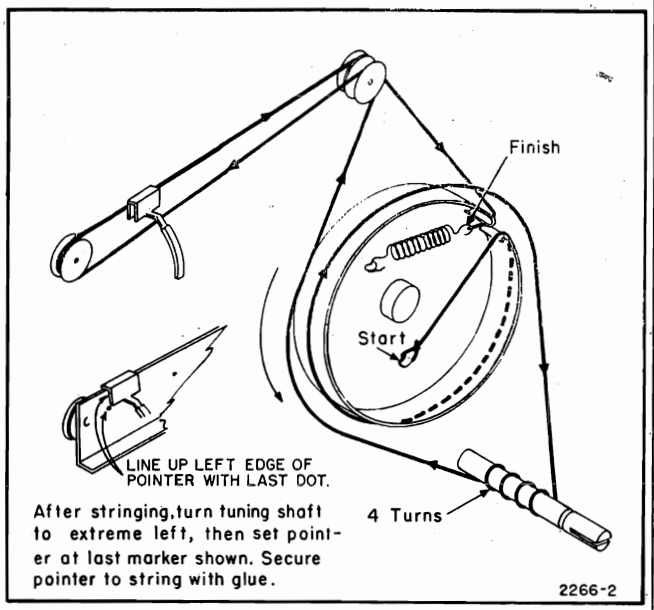

Dial Stringing Diagram

ALIGNMENT PROCEDURE

SIGNAL GENERATOR				TUNER SETTING	ADJUST FOR MAXIMUM OUTPUT	INPUT FOR 50 MILLIWATT OUTPUT
Frequency	*Coupling Capacitor*	*Connection to Radio*	*Ground Connection*			
455 kc.	.1 mf.	12BE6, Pin 7	HEAVY BUSS LEAD ACROSS CENTER OF CHASSIS	Capacitor full open (plates out of mesh)	Top and bottom Cores in output and input I.F. cans	65 microvolts
1620 kc.	.1 mf.	12BE6, Pin 7		Capacitor full open (plates out of mesh)	Oscillator trimmer C1-D on gang	70 microvolts
535 kc.	.1 mf.	12BE6, Pin 7		Capacitor fully closed	Check for adequate range	70 microvolts
1400 kc.	———	Lay Generator lead near back of cabinet		Tune in 1400 kc. signal	Antenna trimmer C1-C on gang	200 to 400 microvolts
400 cycles	.1 mf.	12AT6, Pin 1		———	———	.06 volts

©John F. Rider

Compliments of www.nucow.com

MODEL 94RA2-43-8230A

SCHEMATIC DIAGRAM WITH VOLTAGES

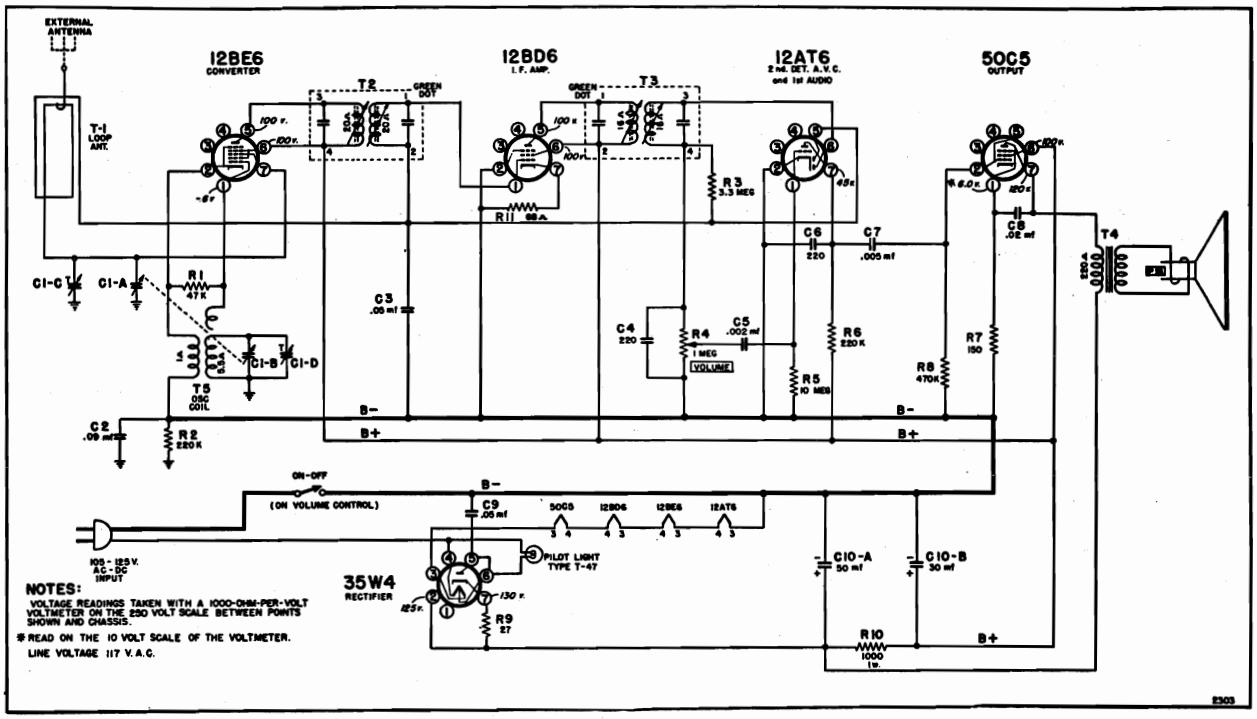

NOTE: In some sets capacitor C-2 is .18 mfd

REPLACEMENT PARTS LIST

Ref. No.	Part No.	Description	Qty. Used in Set
		Condensers	
C1A, B	B-8A-17377	Gang tuning condenser	1
C1C, D		Trimmers on gang	2
C2	C-8D-11251	.09 mf, 400 volts, paper	1
C3	C-8D-10770	.05 mmf, 200 volts, paper	1
C4, C6	A-201-14397	220 mmf	
C5		.002 mf, audio coupling strip	1
C7		.005 mf	
C8	C-8D-10774	.02 mf, 400 volts, paper	
C9	C-8-J-16081	.047 mf, molded, paper, 400 v.	1
C10A, B	A-8C-17391	50-30 mf x 150 volts, lytic	1
		Resistors	
R1	C-9B1-82	47K ohms, ½ watt, 10%	1
R2, 6	C-9B1-27	220K ohms, ½ watt, 20%	2
R3	C-9B1-34	3.3 megohms, ½ watt, 20%	1
R4	A-10A-18650	1 megohm, volume control and switch	1
R5	C-9B1-37	10 megohms, ½ watt, 20%	1
R7	C-9B1-52	150 ohms, ½ watt, 10%	1
R8	C-9B1-29	470K ohms, ½ watt, 20%	1
R9	C-9B1-43	27 ohms, ½ watt, 10%	1
R10	C-9B2-62	1000 ohms, 1 watt, 10%	1
R11	C-9B1-48	68 ohms, ½ watt, 20%	1
		Transformers and Coils	
T1	C-13E-18653	Loop antenna	1
T2	B-13B-17397	Input I.F. transformer	1
T3	B-13B-17399	Output I.F. transformer	1
T4	B-12C-17595	Audio output transformer	1
T5	B-13D-17583	Oscillator coil	1
	B-18A-18656	4" PM speaker	1
		Dial Parts	
	A-3A-18612	Tuning shaft	1
	A-40A-17591	Bushing	1
	B-29E-17592	Spring washer	1
	A-43D-16401	Spring clip	1
	B-29C-10630	"C" washer	1
	A-2M-18612	Dial cross bar	1
	A-2D-17584	Support bracket	1
	B-27A-11039	Shoulder rivet	2
	A-6E-11492	Pulley	3
	A-53A-10989	Dial string (approx. 40" req.)	yd.
	A-49A-10078	Tension spring	1
	A-2G-18615	Dial pointer	1
	B-6D-16383	Dial scale	1
	A-43D-17611	Dial mounting clip	2
	A-47A-18613	Pilot light assembly	1
	A-46A-10793	Pilot light bulb	1
		Miscellaneous	
	A-2M-17580	I.F. mounting clip	2
	A-15C-16007	7-pin, miniature socket	5
	B-14M-11088-1	AC line cord	1
	R-5C-16147-75	Cabinet, bakelite	1
	B-29A-2164	Steel chassis mounting washer	2
	134-103	Rubber chassis mtg. washer	2
	42A-10097	Chassis mounting screw	2
	B-5B-18657-58	Knob	2
	B-23J-18651	Cardboard speaker baffle	1

©John F. Rider

Compliments of www.nucow.com

MODELS 05RA1-43-7755A,
05RA1-43-7755B

GENERAL DESCRIPTION

This radio is an 8 tube (including rectifier tube) AC receiver with automatic record changer, designed for reception of stations in the standard broadcast band between 540 and 1600 kilocycles and FM (Frequency Modulation) stations in the FM Band of 88-108 megacycles. Controls are provided on the front panel for tuning, tone, volume and band or phono selection. Special features include two built-in antennas, a grounded grid R-F amplifier stage on the FM Band, automatic volume control, compensator circuits to prevent oscillator drift, beam power output stage, permanent magnet dynamic speaker and an electrostatic shield in the power transformer to reduce power line noise.

ELECTRICAL SPECIFICATIONS

Power Consumption
117 volts AC—60 cycles 40 Watts
60 watts phono operating

Power Output —
1.5 watts maximum
.8 watts 10% distortion

Speaker—8" PM dynamic

Frequency Ranges —
Broadcast 540-1600 KC
Frequency modulation 88-108 MC

Intermediate Frequency —
AM 455 KC — FM 10.7 MC

Selectivity — AM — 45 KC broad at 1000 times signal, measured at 1000 KC
I.F. FM—200 KC broad at 2 times down
I.F. FM — 950 KC broad at 200 times down

AM Sensitivity—(For .5 watt output with external antenna)
25 microvolts average

FM Sensitivity—(For .5 watt output)
25 microvolts average

Tube and Dial Lamp Complement

1 6BE6 AM Converter & FM Osc.
1 6BA6 1st I-F Amplifier
1 6BA6 2nd I-F Amplifier
1 6AL5 FM Discriminator
1 6AV6 Audio Amplifier, AM 2nd Detector and AVC
1 6V6GT Audio Output
1 6X5GT Rectifier
1 12AT7 R-F Amplifier & Mixer
2 No. 47 Dial Lamps

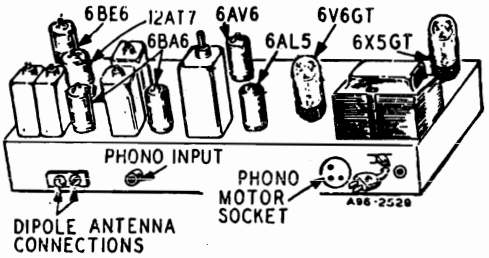

DRIVE CORD REPLACEMENT

Replacement of the drive cord may be accomplished as shown in the illustration. For this purpose use the new drive cord assembly listed in the Replacement Parts List. Turn the gang condenser until the plates are fully meshed. Then install the string as shown, winding three turns clockwise around the tuning shaft with the turns progressing away from the chassis. After the cord is installed, rotate the tuning shaft several times in order to take up any slack in the cord.

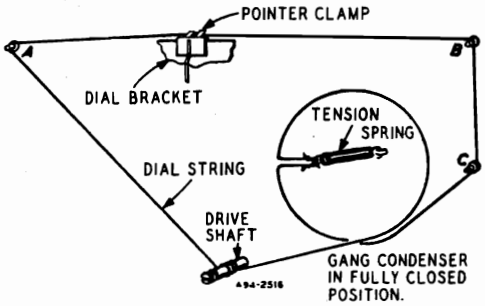

©John F. Rider

Compliments of www.nucow.com

MODELS 05RA1-43-7755A,
05RA1-43-7755B

ALIGNMENT PROCEDURES

AM STAGES

The following is required for aligning:
An All Wave Signal Generator Which Will Provide an Accurately Calibrated Signal at the Test Frequencies as Listed.
Output Indicating Meter, Non-Metallic Screwdriver, Dummy Antennas — .1 mf, and 50mmf.

Volume Control Maximum all Adjustments.
Connect Radio Chassis to Ground Post of Signal Generator with a Short Heavy Lead.
Allow Chassis and Signal Generator to "Heat Up" for Several Minutes.

SIGNAL GENERATOR						
FREQUENCY SETTING	CONNECT GENERATOR OUTPUT TO	THROUGH DUMMY ANTENNA	CONNECT GROUND TO	GANG CONDENSER SETTING	ADJUST	ADJUST FOR
455 KC	Control Grid 1st 6BA6 Pin No. 1	.1 mf	Chassis Base	Rotor Fully Open	2nd I.F. Pri. (1) and Sec. (2)	Maximum Output
455 KC	Control Grid 6BE6 Pin No. 7 1st Det.	.1 mf	Chassis Base	Rotor Fully Open	1st I.F. Pri. (3) and Sec. (4)	Maximum Output
455 KC	Control Grid 6BE6 Pin No. 7	.1 mf	Chassis Base	Rotor Fully Open	2nd I-F Pri. (1) and Sec. (2)	Maximum Output
1620 KC	Control Grid 6BE6 Pin No. 7	.1 mf	Chassis Base	Rotor Fully Open	Oscillator C-41	Maximum Output
1400 KC	External Antenna Lead	50 mmf	Chassis Base	Turn Rotor to Max. Output. Set Pointer to 1400 KC See Note A	Antenna C-2	Maximum Output

NOTE A—If the pointer is not at 1400 KC on the dial, reset pointer to the 1400 KC mark on the dial scale.

FM STAGES

The following is required for aligning:
An accurately calibrated signal generator providing unmodulated signals at the test frequencies listed below.
Non-metallic screwdriver.
Dummy Antennas and I-F Loading Resistor—2500 mmf, 300 ohms

Zero center scale DC vacuum tube voltmeter having a range of approximately 3 volts.
(If a zero center scale meter is not available, a standard scale vacuum tube voltmeter may be used by reversing the meter connections for negative readings).
Allow chassis and signal generator to "Heat Up" for several minutes.

SIGNAL GENERATOR							
	FREQUENCY SETTING	CONNECT GENERATOR OUTPUT TO	THROUGH DUMMY ANTENNA	BAND SWITCH SETTING	GANG CONDENSER SETTING	ADJUST	ADJUST FOR
Discriminator	10.7 MC	6BA6 2nd I-F Pin 1 and Chassis	2500 mmf	FM	Rotor Fully Open	Disc. Pri. (5) Note A	Maximum Deflection
	10.7 MC	6BA6 2nd I-F Pin 1 and Chassis	2500 mmf	FM	Rotor Fully Open	Disc. Sec. (6) Note B	
I-F	10.7 MC Note C	6BA6 1st I-F Pin 1 and Chassis	2500 mmf	FM	Rotor Fully Open	2nd I-F Pri. (7) Sec. (8) Note D	Maximum Deflection
Discriminator	10.7 MC	6BA6 1st I-F Pin 1 and Chassis	2500 mmf	FM	Rotor Fully Open	Disc. Pri. (5) Note D	Maximum Deflection
I-F	10.7 MC	Junction C-32A & B (Dual 100 mmf cond.) And chassis	2500 mmf	FM	Rotor Fully Open	1st I-F Pri. (9) & Sec. (10) 2nd I-F Pri. (7) & Sec. (8) Disc. Pri. (5) In Order Shown Note D	Maximum Deflection
	10.7 MC	Same as above	2500 mmf	FM	Rotor Fully Open	Disc. Sec. (6) Note B	Maximum Deflection
RECHECK I-F ADJUSTMENTS IN ORDER GIVEN							
Oscillator	108.5	Disconnect built-in dipole antenna and connect generator to dipple terminals with resistor in series.	300 ohms	FM	Rotor Fully Open	Osc. C-25	Maximum Deflection
Antenna	104.5	Same as above	300 ohms	FM	Tune rotor for max. AVC voltage	Ant. C-39	Maximum Deflection
RECHECK ANTENNA & OSC. ADJUSTMENTS IN ORDER GIVEN							

FM ALIGNMENT NOTES

NOTE A—The zero center scale DC vacuum tube voltmeter is to be connected between chassis ground and the AVC line. A signal of .1 volt must be fed into the receiver for this adjustment.
Note output voltage on the zero center DC vacuum tube voltmeter

NOTE B—Disconnect zero center DC vacuum tube voltmeter from AVC and connect it at the audio takeoff point at the 27 K ohm resistor (R-10) and its junction with the terminal strip. Adjust for zero voltage indication.

NOTE C—AM I-F coils must be aligned before attempting to align the FM I-F coils.

NOTE D—Connect zero center DC vacuum tube voltmeter as in Note A. Adjust input to give same output on the zero center DC vacuum tube voltmeter as in Note A.

©John F. Rider

Compliments of www.nucow.com

MODELS 05RA1-43-7755A,
05RA1-43-7755B

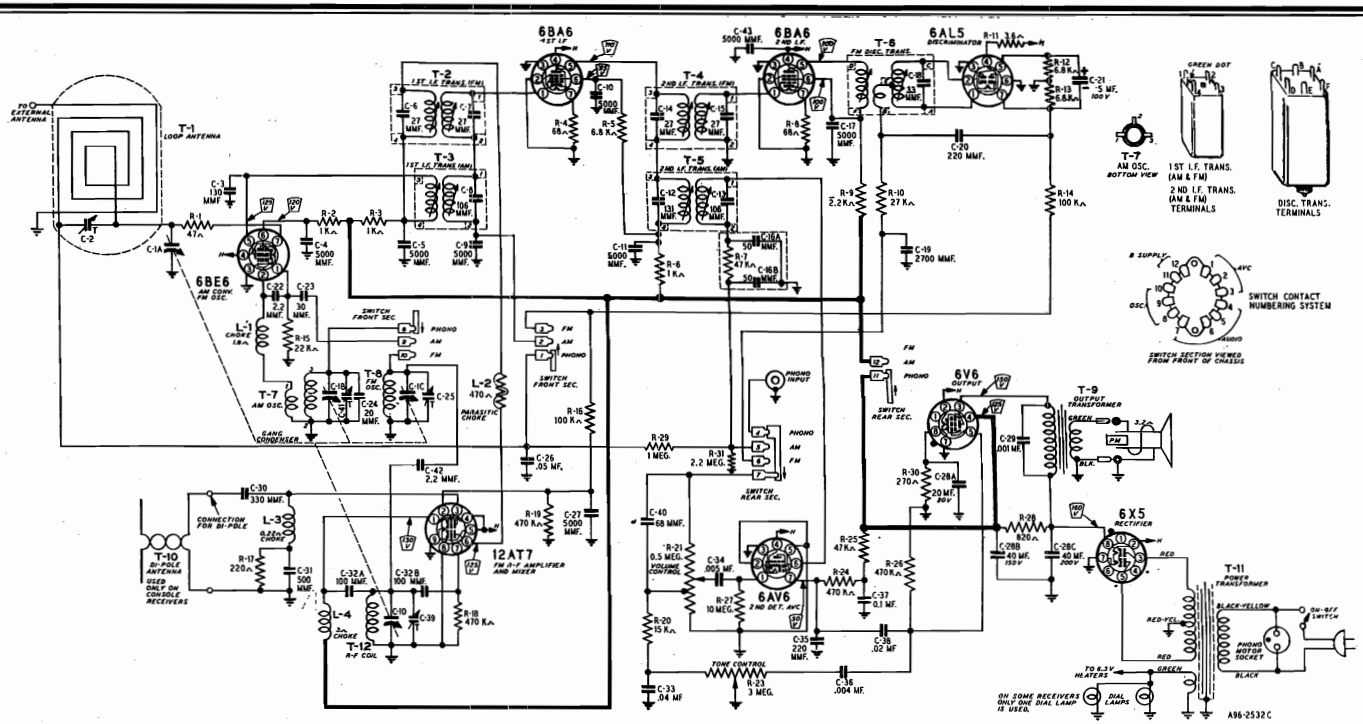

TUBE SOCKET VOLTAGES

Socket voltages are shown on the Schematic diagram at the tube socket terminals. All voltages are between the socket terminal and chassis ground. Plate, screen and cathode voltages were taken with a 1000 ohm-per-volt meter with a 300 volt scale used for plate and screen voltages. Audio grid voltages were read with a vacuum tube volt-meter. Conditions of measurement are:

Line voltage .....117 Volts AC
Signal Input .....None
A Variation of ±10% is usually permissible.

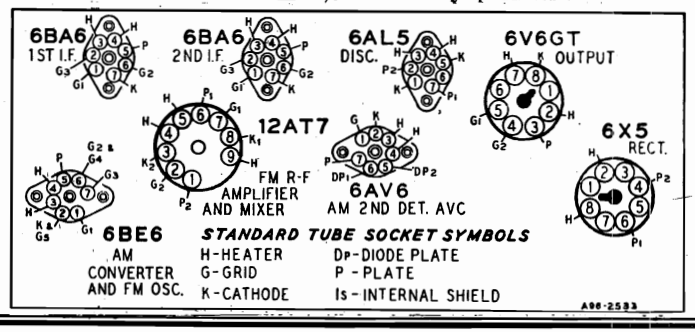

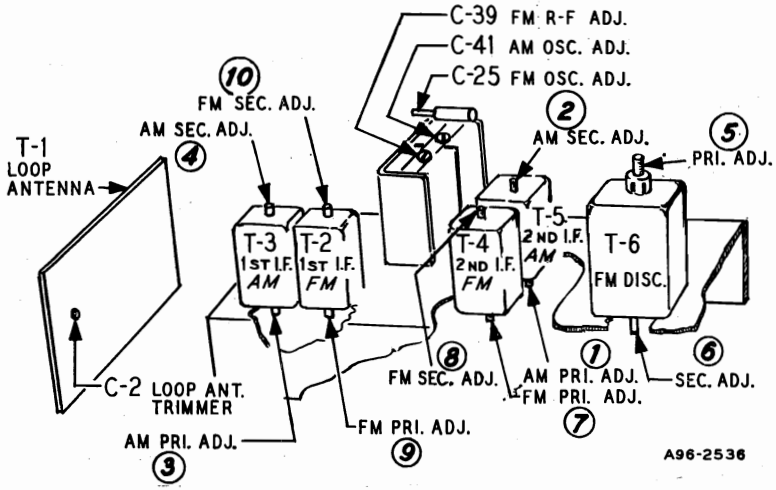

©John F. Rider

Compliments of www.nucow.com

MODELS 05RA1-43-7755A,
05RA1-43-7755B

REPLACEMENT PARTS LIST

Ref. No.	DESCRIPTION	Part No.
	CAPACITORS	
C-1	Gang Condenser Assembly	14A209
C-2	Capacitor, Trimmer; 2-24 mmf	17A256
C-3	Capacitor, Ceramic; 130 mmf	47X559
C-4, C-5, C-9, C-10, C-11, C-17, C-27, C-43	Capacitor, Ceramic; 5000 mmf	47X507
C-6, C-7	Part of T-2 (1st I-F Trans. F.M.)	
C-8	Part of T-3 (1st I-F Trans. AM)	
C-12, C-13	Part of T-5 (2nd I-F Trans. AM)	
C-14, C-15	Part of T-4 (2nd I-F Trans. FM)	
C-16A, C-16B	Capacitor, Dual Mica; 50-50 mmf	47X112
C-18	Part of T-6 (Discriminator Trans.)	
C-19	Capacitor, Molded Mica; 2700 mmf	47X492
C-20, C-35	Capacitor, Ceramic; 220 mmf	47X468
C-21	Capacitor, Dry Electrolytic; 5 mf 100 V	45X361
C-22, C-42	Capacitor, Ceramic; 2.2 mmf	47X557
C-23	Capacitor, Ceramic; 30 mmf	47X558
C-24	Capacitor, Ceramic; 20 mmf	47X516
C-25	Capacitor, Trimmer; 1-8 mmf	17A255
C-26	Capacitor, Tubular; .05 mf 200 V	B66503
C-28A, C-28B, C-28C	Capacitor; Dry Electrolytic; 20 mf 20 V, 40 mf 150 V, 40 mf 200 V	45X360
C-29	Capacitor, Tubular; .001 mf 800 V	H66102
C-30	Capacitor, Molded Mica; 330 mmf	47X470
C-31	Capacitor, Ceramic; 500 mmf	47X508
C-32A, C-32B	Capacitor, Dual Ceramic; 100 mmf	76X4
C-33	Capacitor, Tubular; .04 mf 200 V	B66403
C-34	Capacitor, Tubular; .005 mf 400 V	D66502
C-36	Capacitor, Tubular; .004 mf 200 V	B66402
C-37	Capacitor, Tubular; .1 mf 400 V	D66104
C-38	Capacitor, Tubular; .02 mf 400 V	D66203
C-39, C-41	Part of C-1 (Gang Condenser)	
C-40	Capacitor, Ceramic; 68 mmf	47X471
	RESISTORS	
R-1	Resistor, Carbon; 47 ohms 0.5 W	B85470
R-2, R-3, R-6	Resistor, Carbon; 1000 ohms 0.5 W	B85102
R-4, R-8	Resistor, Carbon; 68 ohms 0.5 W	B84680
R-5, R-12, R-13	Resistor, Carbon; 6800 ohms 0.5 W	B84682
R-7, R-25	Resistor, Carbon; 47 K ohms 0.5 W	B85473
R-9	Resistor, Carbon; 2200 ohms 0.5 W	B85222
R-10	Resistor, Carbon; 27 K ohms 0.5 W	B85273
R-11	Resistor, Wirewound; 3.6 ohms 0.5 W	43X233
R-14, R-16	Resistor, Carbon; 100 K ohms 0.5 W	B85104
R-15	Resistor, Carbon; 22 K ohms 0.5 W	B85223
R 17	Resistor, Carbon; 220 ohms 0.5 W	B84221
R-18, R-19, R-24, R-26	Resistor, Carbon; 470 K ohms 0.5 W	B85474
R-20	Resistor, Carbon; 15 K ohms 0.5 W	B85153
R-21	Volume Control & Switch; .5 megohm	36X372
R-23	Tone Control; 3 megohms	40X285
R-27	Resistor, Carbon; 10 megohms 0.5 W	B85106
R-28	Resistor, Carbon; 820 ohms 2.0 W	D84821
R-29	Resistor, Carbon; 1 megohm 0.5 W	B85105
R-30	Resistor, Carbon; 270 ohms 0.5 W	B84271
R-31	Resistor, Carbon; 2.2 megohms 0.5 W	B85225
	TRANSFORMERS AND COILS	
L-1	Choke, Insulated	35A5
L-2	Choke, Parasitic	9A2103
L-3	Choke, Insulated	35A9
L-4	Choke, Insulated	35A8
T-1	"B" Range Loop Antenna	9A2099
T-2	1st I-F Trans. (FM)	9A2060
T-3	1st I-F Trans. (AM)	9A2062
T-4	2nd I-F Trans. (FM)	9A2061
T-5	2nd I-F Trans. (AM)	9A2063
T-6	Discriminator Transformer	9A2064
T-7	Oscillator Coil (AM)	9A2065
T-8	Oscillator Coil (FM)	9A2057
T-9	Output Transformer	51X134
T-10	Dipole Antenna	9A2003
T-11	Power Transformer	53X291
T-12	Antenna Coil (FM)	9A2066
	DIAL AND TUNING PARTS	
	No. 47 Pilot Light	7A103
	Pilot Light Socket Assembly	7A199
	Escutcheon	4X1060
	Rubber Grommets (mtg. Gang Cond.)	6X66
	Drive Cord Assembly	10X72
	Pointer	15X251
	"C" Washer (Drive Shaft)	19X192
	Condenser Cushion Stud	20X260
	Drive Shaft	26X486
	Drive Cord Tension Spring	28X113
	Spring (Dial Glass)	28X564
	Dial Glass	58X732
	MISCELLANEOUS	
	Band Change Switch	2A393
	Phono Motor Socket	3A304
	Phono Socket (Single Pin)	3A305
	Tube Socket (1st 6BA6)	3A426
	Tube Socket (6BE6)	3A427
	Tube Socket, Molded (Octal)	3A435
	Tube Socket (Miniature)	3A439
	Tube Socket (12AT7)	3A443
	Knob (Tuning)	10A699
	Knob (Off-Volume)	10A700
	Knob (Tone)	10A701
	Knob (FM-BC-PH)	10A702
	Speaker, 8" P.M.	12A477
	Record changer—3 speed	28A166
	Line Cord & Plug Assembly	13X546
	Line Cord Clamp	30X560

©John F. Rider

Compliments of www.nucow.com

MODEL 05RA1-43-7901A

ELECTRICAL SPECIFICATIONS

Power Supply	105-125 volts AC 60 cycles, 80 watts, 100 watts with record changer
Frequency Ranges	Broadcast 540-1600 KC Frequency Modulation 88-108 MC
Intermediate Frequency	AM—455 KC FM—10.7 MC
Selectivity	AM—43 KC broad at 1000 times signal, measured at 1000 KC I.F. FM—200 KC broad at 2 times down I.F. FM—760 KC broad at 200 times down
AM Sensitivity	(For .5 watt output with external antenna) 10 microvolts average
FM Sensitivity	(For .5 watt output) 30 microvolts average
Power Output	8.5 watts maximum 6.0 watts 10% distortion
Loud Speaker	12" PM Dynamic
Voice Coil Impedance	3.2 ohms 400 cycles

DRIVE CORD REPLACEMENT

Use a new 10X38 drive cord assembly or a new length of cord 46 inches long for the installation, winding three turns clockwise around the drive shaft with the turns progressing away from the chassis. After completing the installation, rotate the drive shaft a few turns to take up the slack in the cord.

Tube and Dial Lamp Complement

- 1 6BA6 AM-FM R-F Amplifier
- 1 12AT7 FM & AM Osc. & Mixer
- 1 6BA6 FM-AM 1st I-F Amplifier
- 1 6BA6 FM 2nd I-F Amplifier
- 1 6AL5 FM Detector
- 1 6AV6 Audio Amplifier, AM 2nd Detector and AVC
- 2 6K6-GT Audio Output
- 1 5Y3-GT Rectifier
- 1 6AV6 Phase Inverter
- 2 No. 47 Dial Lamps

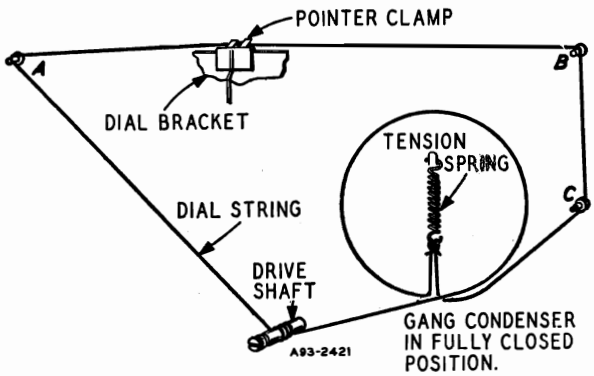

©John F. Rider

Compliments of www.nucow.com

MODEL 05RA1-43-7901A

ALIGNMENT PROCEDURE

AM STAGES

The following is required for aligning:
An All Wave Signal Generator Which Will Provide an Accurately Calibrated Signal at the Test Frequencies as Listed.
Output Indicating Meter, Non-Metallic Screwdriver, Dummy Antennas —.1 mf, 200 mmf.

Volume Control—Maximum all Adjustments
Connect Radio Chassis to Ground Post of Signal Generator with a Short Heavy Lead.
Allow Chassis and Signal Generator to "Heat Up" for Several Minutes.

SIGNAL GENERATOR		CONNECT GENERATOR OUTPUT TO	THROUGH DUMMY ANTENNA	BAND SWITCH SETTING	GANG CONDENSER SETTING	ADJUST	ADJUST FOR
	FREQUENCY SETTING						
I-F	455 kc	12AT7 Pin 7 and Chassis	.1 mf	Broadcast	Rotor Fully Open	2nd I-F Pri. & Sec. (1) & (2) 1st I-F Pri. & Sec. (3) & (4)	Maximum Output
Broadcast	1620 kc	External ant. term.	200 mmf	Broadcast	Rotor Fully Open	Broadcast Oscillator C-33	
	1400 kc	External ant. term.	200 mmf	Broadcast	Turn Rotor to Max. Output	Broadcast Interstage C-29	
	1400 kc	External ant. term.	200 mmf	Broadcast	Set pointer to 1400 kc See Note A	Loop Antenna C-48	

Note A—If the pointer is not at 1400 KC on dial, reset pointer at the 1400 KC mark on the dial scale.

FM STAGES

The following equipment is required for aligning:
An accurately calibrated signal generator providing unmodulated signals at the test frequencies listed below.
Non-metallic screwdriver.
Dummy Antennas and I-F Loading Resistor—.01 mf, 300 ohms and 1000 ohms.

Zero center scale DC vacuum tube voltmeter having a range of approximately 3 volts.
(If a zero center scale meter is not available, a standard scale vacuum tube voltmeter may be used by reversing the meter connections for negative readings.)
Allow chassis and signal generator to warm up for several minutes.

	SIGNAL GENERATOR		THROUGH DUMMY ANTENNA	BAND SWITCH SETTING	GANG CONDENSER SETTING	ADJUST	ADJUST FOR
	FREQUENCY SETTING	CONNECT GENERATOR OUTPUT TO					
Discriminator	10.7 MC Note B	6BA6 2nd I-F Pin 1 and Chassis	.01 mf	FM	Rotor Fully Open	Disc. Pri. (5) Note A	Maximum Deflection
	10.7 MC Note B	6BA6 2nd I-F Pin 1 and Chassis	.01 mf	FM	Rotor Fully Open	Disc. Sec. (6) Note C	Zero Center
I-F	10.7 MC Note F	6BA6 1st I-F Pin 1 and Chassis	.01 mf	FM	Rotor Fully Open	2nd I-F Pri. Note A and D (7) 2nd I-F Sec. Note A and E (8)	Maximum Deflection
Discriminator	10.7 MC Note F	6BA6 1st I-F Pin 1 and Chassis	.01 mf	FM	Rotor Fully Open	Disc. Pri. (5) Note A	Maximum Deflection
	10.7 MC Note F	6BA6 1st I-F Pin 1 and Chassis	.01 mf	FM	Rotor Fully Open	Disc. Sec. (6) Note C	Zero Center
	10.7 MC Note F	FM-RF Gang Condenser terminal	.01 mf	FM	Rotor Fully Open	1st I-F Pri. (9) 1st I-F Sec. (10) Notes A, D & E	Maximum Deflection
Recheck I-F Adjustments in order given							
R-F & Osc.	108.4 Note H	Disconnect dipole and connect generator to dipole terminals with resistor in series	300 ohms	FM	Rotor Fully Open	Oscillator C-35 Note G	Maximum Deflection
	104.5	Disconnect dipole and connect generator to dipole terminals with resistor in series	300 ohms	FM	Tune Rotor for Max. AVC voltage	FM Interstage C-32	Maximum Deflection
	104.5	Disconnect dipole and connect generator to dipole terminals with resistor in series	300 ohms	FM	Tune Rotor for Max. AVC voltage	Ant. C-47	Maximum Deflection
Recheck R-F and Osc. Adjustments in order given							

NOTE A—Test Equipment connections are as given in the table. The zero center scale DC vacuum tube voltmeter is to be connected between chassis ground and the AVC line at the junction of resistor R-22 and condenser C-18 for all adjustments except the discriminator secondary adjustment, for which See Note C.

NOTE B—A signal of .1 volt must be fed into the receiver for this adjustment.

NOTE C—Disconnect zero center DC vacuum tube voltmeter from AVC and connect to junction of R-18 and C-62. Adjust for zero voltage indication.

NOTE D—Before adjusting Pri. core connect 1000 ohm load resistor across the 2nd I.F. secondary terminals. Input may have to be increased to .1 volt if receiver is *badly* mis-aligned.

NOTE E—Disconnect 1000 ohm load resistor from secondary terminals and connect across the 2nd I.F. primary terminals. Input may have to be increased to .1 volt if receiver is *badly* mis-aligned.

NOTE F—Input can be reduced to 10,000 microvolts.

NOTE G—Oscillator frequency above signal frequency.

NOTE H—Remove the 1000 ohm load resistor before attempting to check the R-F and oscillator adjustments.

©John F. Rider

Compliments of www.nucow.com

MODEL 05RA1-43-7901A

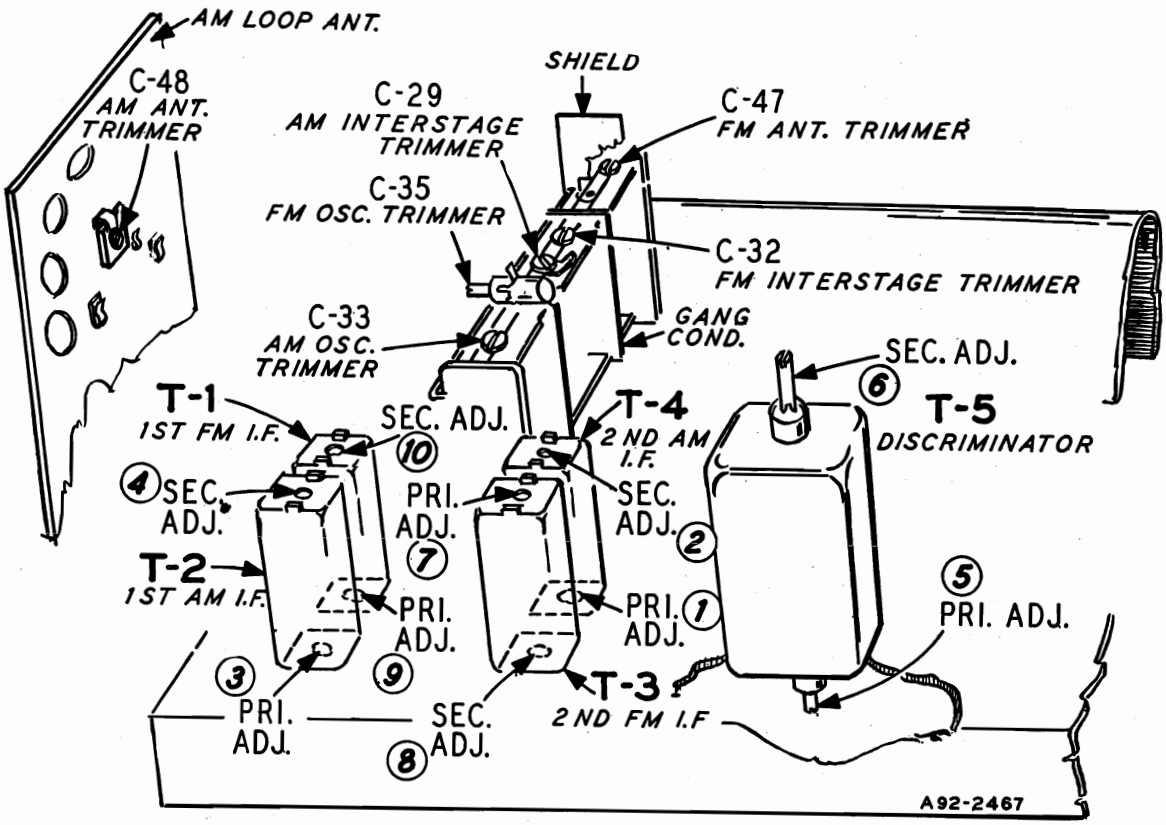

NOTE—T-5 discriminator transformers with Part No. 9A1970 stamped on the can must be aligned as outlined in this service manual.

Discriminator transformers with Part No. 9A2064 stamped on the can have the primary adjustment at the top and the secondary adjustment at the bottom.

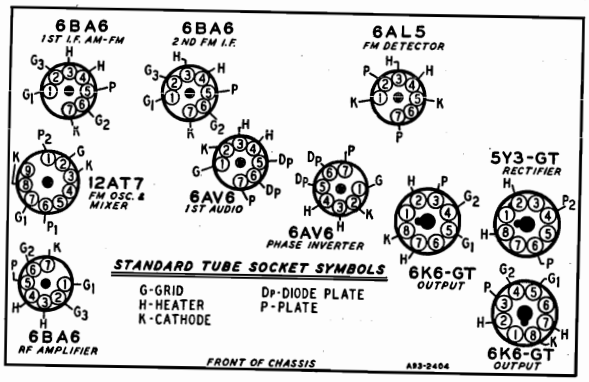

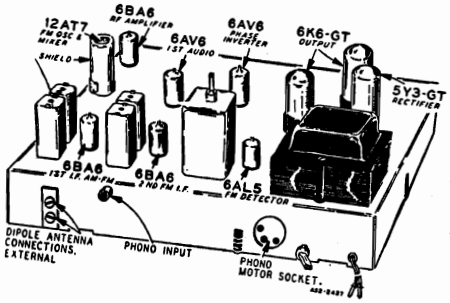

TUBE SOCKET VOLTAGES

Socket voltages are shown on the Schematic diagram at the tube socket terminals. All voltages are between the socket terminal and chassis ground. Plate, screen and cathode voltages were taken with a 1000 ohm-per-volt meter with a 300 volt scale used for plate and screen voltages. Audio grid voltages were read with a vacuum tube volt-meter. Conditions of measurement are:

Line voltage .....117 Volts AC
Signal Input .....None
A variation of ±10% is usually permissible.

©John F. Rider

Compliments of www.nucow.com

MODEL 05RA1-43-7901A

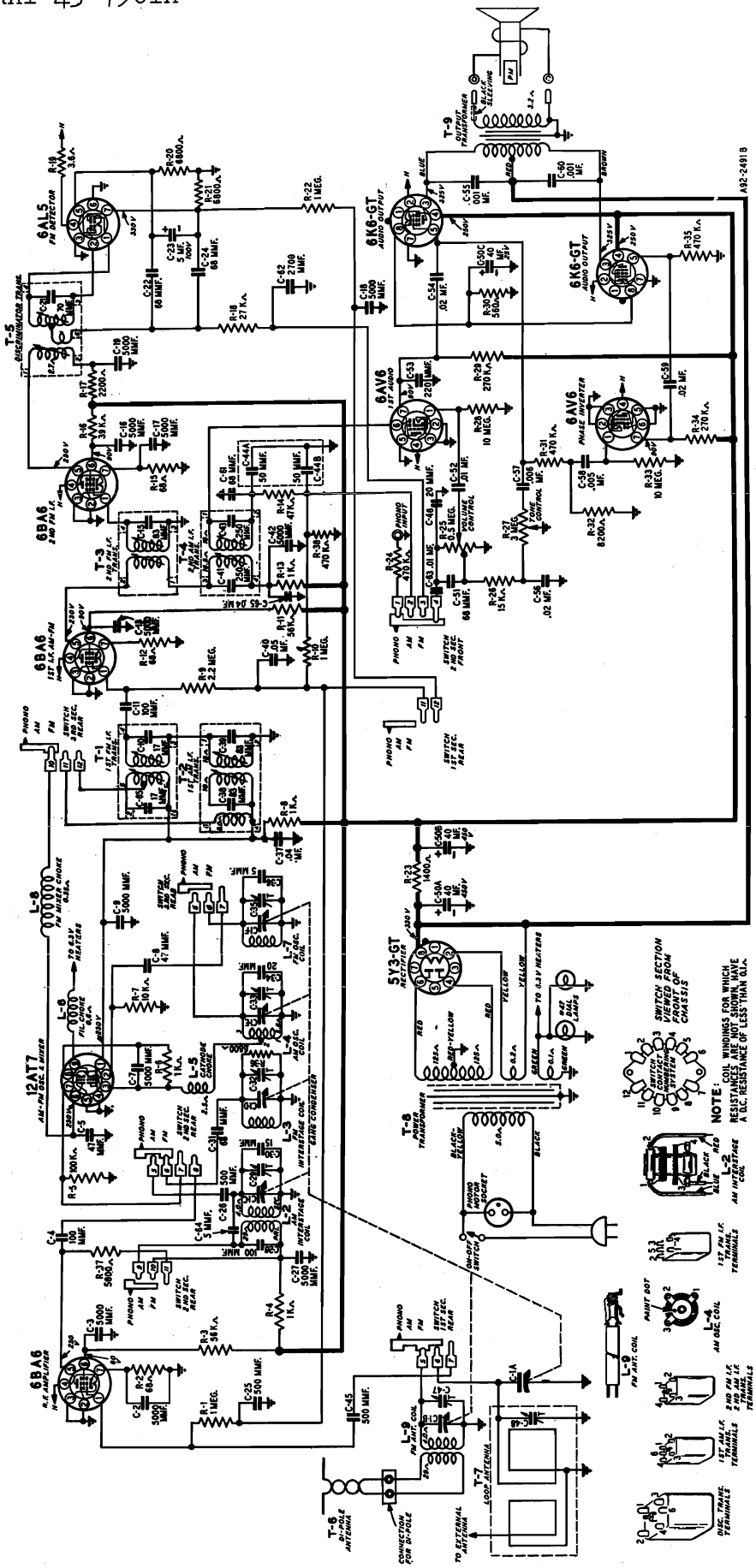

©John F. Rider

Compliments of www.nucow.com

MODEL 05RA1-43-7901A

REPLACEMENT PARTS LIST

When ordering parts, specify part number, model number and any other pertinent information

Ref. No.	DESCRIPTION	Part No.
	CAPACITORS	
C-1	Gang Condenser and Pulley	14A207
C-2, C-3, C-7, C-9, C-13, C-16, C-17, C-18, C-19, C-27, C-42	Capacitor, Silvered Mica, 5000 mmf	47X507
C-4	Capacitor, Ceramic, 100 mmf ± 20%	47X497
C-5	Capacitor, Ceramic, 47 mmf ± 5%	47X499
C-8	Capacitor, Ceramic 47 mmf ± 10%	47X498
C-10, C-65	Part of T-1	
C-11, C-28	Capacitor, Ceramic, 100 mmf ± 10%	47X550
C-15	Part of T-3	
C-21	Part of T-5	
C-22, C-24, C-31, C-51	Capacitor, Ceramic, 68 mmf ± 10%	47X501
C-23	Capacitor, Dry Electrolytic, 5 mf 100 V.	45X361
C-25, C-45	Capacitor, Ceramic, 500 mmf ± 20%	47X496
C-26	Capacitor, Ceramic, 5 mmf	47X549
C-29, C-32, C-33, C-47	Part of C-1	
C-30	Capacitor, Ceramic, 15 mmf ± 10%	47X552
C-34, C-46	Capacitor, Ceramic 20 mmf ± 10%	47X516
C-35	Capacitor, Trimmer, 1-8 mmf	26A489
C-36, C-64	Capacitor, Ceramic, 5 mmf ± 10%	47X549
C-37, C-65	Capacitor, Tubular, .04 mf 600 V	F66403
C-38, C-39	Part of T-2	
C-40	Capacitor, Tubular, .05 mf 200 V.	B66503
C-41, C-43	Part of T-4	
C-44A, C-44B	Capacitor, Dual Mica, 50-50 mmf.	47X112
C-48	Part of T-7	
C-50A, C-50B, C-50C	Capacitor, 3 section Electrolytic — 40 mf 450 V., 40 mf 450 V., 40 mf 25 V.	45X374
C-52	Capacitor, Tubular, .01 mf 600 V.	F66103
C-53	Capacitor, Ceramic, 220 mmf ± 20%	47X468
C-54, C-59	Capacitor, Tubular, .02 mf 600 V	F66203
C-55, C-60	Capacitor, Tubular, .001 mf 600 V.	F66102
C-56	Capacitor, Tubular, .02 mf 200 V.	B66203
C-57	Capacitor, Tubular, .006 mf 600 V.	F66602
C-58	Capacitor, Tubular, .005 mf 200 V.	B66502
C-61	Capacitor, Ceramic, 68 mmf ± 20%	47X471
C-62	Capacitor, Molded Mica, 2700 mmf ± 10%	47X492
C-63	Capacitor, Tubular, .01 mf 120 V.	46X328
	RESISTORS	
R-1, R-10, R-22	Resistor, Carbon 1 Megohm .5 W.	B85105
R-2, R-12, R-15	Resistor, Carbon 68 Ohms .5 W.	B83680
R-3, R-11	Resistor, Carbon 56K Ohms .5 W.	B84563
R-4, R-6, R-8, R-13	Resistor, Carbon 1000 Ohms .5 W.	B84102
R-5	Resistor, Carbon 100K Ohms .5W.	B85104
R-7	Resistor, Carbon 10K Ohms .5 W.	B84103
R-9	Resistor, Carbon 2.2 Megohm .5 W.	B85225
R-14	Resistor, Carbon 47K Ohms .5 W.	B85473
R-16	Resistor, Carbon 39K Ohms 1.0 W.	C84393
R-17	Resistor, Carbon 2200 Ohms .5 W.	B85222
R-18	Resistor, Carbon 27K Ohms .5 W.	B84273
R-19	Resistor, Wire Wound 3.6 Ohms .5 W.	43X233
R-20, R-21	Resistor, Carbon 6800 Ohms .5 W.	B83682
R-23	Resistor, Wire Wound 1400 Ohms 5.0 W.	43X242
R-25	Volume Control & Switch .5 meg.	36X379
R-26	Resistor, Carbon 15K Ohms .5 W.	B85153
R-27	Tone Control 3 meg.	40X288
R-28, R-33	Resistor, Carbon 10 Megohm .5 W.	B85106
R-29, R-34	Resistor, Carbon 270K Ohms .5 W.	B85274
R-30	Resistor, Carbon 560 Ohms 2.0 W.	D83561
R-31, R-35, R-38	Resistor, Carbon, 470 K Ohms .5 W	B85474

©John F. Rider

Compliments of www.nucow.com

MODEL 05RA1-43-7901A

REPLACEMENT PARTS LIST (continued)

When ordering parts, specify part number, model number and any other pertinent information

Ref. No.	DESCRIPTION	Part No.
R-32	Resistor, Carbon 8200 Ohms .5 W.	B84822
R-36	Resistor, Carbon 6800 Ohms .5 W.	B84682
R-37	Resistor, Carbon 5600 Ohms .5 W.	B84562

COILS AND TRANSFORMERS

L-2	Coil, Interstage (AM)	9A2025
L-3	Coil, Interstage (FM)	9A2024
L-4	Coil, Oscillator (AM)	9A2022
L-5	Choke, Insulated	35A5
L-6	Choke, Filament	9A1881
L-7	Coil, Oscillator (FM)	9A2023
L-8	Choke (FM Mixer Plate)	35A7
L-9	Coil, Antenna (FM)	9A2027
T-1	1st I.F. Coil Assembly (FM)	9A2043
T-2	1st I.F. Coil Assembly (AM)	9A2029
T-3	2nd I.F. Coil Assembly (FM)	9A2030
T-4	2nd I.F. Coil Assembly (AM)	9A2042
T-5	Discriminator Coil Assembly	9A2064
T-6	Dipole Antenna Assembly	9A2004
T-7	"B" Range Loop Antenna Assembly	9A1972
T-8	Power Transformer	53X286
T-9	Output Transformer	51X142

DIAL AND TUNING PARTS

Escutcheon		4X1073
Rubber Grommets	Mtg. Gang Condenser	6X67
Condenser Mtg. Bracket	Mtg. Gang Condenser	25X1630
Drive Cord Assembly		10X38
Pointer		15X251
"C" Washer (Drive Shaft)		19X192
Drive Shaft		26X509
Drive Cord Tension Spring		28X113

Ref. No.	DESCRIPTION	Part No.
Dial Bracket Assembly		S-25X31
Consisting of:		
Tubular Rivet		20X1564
Shoulder Rivet		20X1580
Shoulder Rivet		20X1581
Eyelet		20X1508
Dial Bracket		25X1610
Support bracket, L. H.		25X1611
Support Bracket, R. H.		25X1612
Dial Assembly		S-58X41
Consisting of:		
Dial Bracket Assembly		S-25X31
Rubber Strip		8X195
Trimount Stud		28X56
Spring		28X564
Light Shield		41X86
Dial Glass		58X716

MISCELLANEOUS

Band Change Switch	2A404
Phono Motor Socket	3A304
Phono Socket (Single Pin)	3A305
Molded Octal Tube Socket	3A435
Tube Socket (miniature, for AM-FM Converter)	3A436
Tube Socket (Miniature)	3A439
No. 47 Pilot Light	7A103
Pilot Light Socket Assembly	7A215
Knobs	10A767
12" P.M. Speaker	12A502
Record Changer	28A171
Line Cord & Plug Assembly	13X546
Tube Shield (AM-FM Converter)	32X388
Tube Shield (Miniature)	32X390

©John F. Rider

Compliments of www.nucow.com

MODEL 05RA2-43-8515A

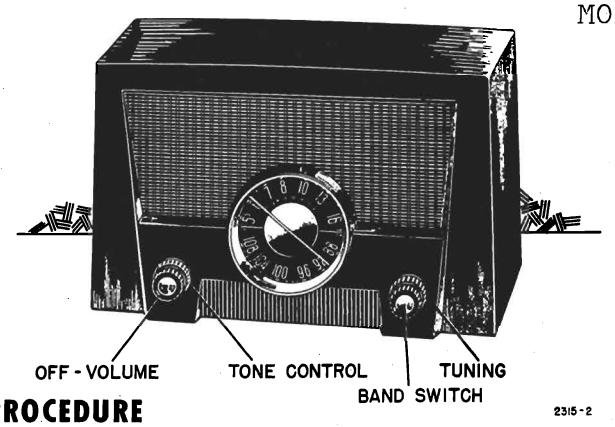

ALIGNMENT PROCEDURE

Broadcast Band Section I. F. and R. F.

The alignment procedure below includes the sensitivities at the inputs of various stages. All signal input values are based on an output of 500 milliwatts. This may be measured by disconnecting the speaker voice coil and substituting a 3.2-ohm resistor across the secondary winding of the output transformer. A reading of 1.27 volts AC across this resistor will be approximately equivalent to 500 milliwatt output with the speaker connected. The volume control must be set at maximum. The tone control must be set for maximum treble.

The signal source must be an accurately calibrated signal generator capable of supplying the frequencies designated, modulated 30% with a 400-cycle audio signal. A 400 cycle audio signal is required for the audio measurement. Variations in sensitivities of plus or minus 25% are usually permissable.

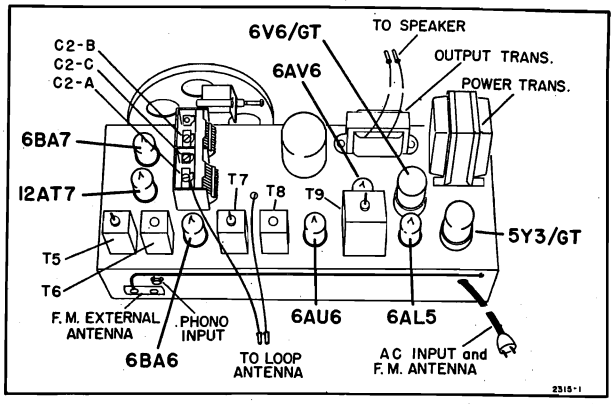

Chassis View

AM—I. F. ALIGNMENT

Band Switch in AM Position, Gang Open, Dummy Antenna .1 Mfd.

SIGNAL GENERATOR FREQUENCY	CONNECTION TO RADIO	ADJUSTMENTS TO BE MADE	ADJUST FOR
400 cycles. Use 65 millivolts	High Side of Volume Control and chassis	None	Maximum output Should be 500 Milliwatts
455 Kc. Use 3300 microvolts	Pin 1 of 6BA6 I.F. Amp. and chassis	Primary and Secondary of T8. See chassis view.	Maximum output Should be 500 Milliwatts
455 Kc. Use 55 microvolts	Pin 7 of 6BA7 Converter and chassis	Primary and Secondary of T6. See chassis view.	Maximum output Should be 500 Milliwatts

BROADCAST BAND—R. F. ALIGNMENT

Check pointer so that the right hand edge of the pointer skirt coincides with the right hand edge of dial marker at the extreme left when gang is closed.

For adjustment, see dial mechanism illustration.

SIGNAL GENERATOR FREQUENCY	SET POINTER AT	CONNECT TO RADIO	ADJUST
1620 Kc.	Extreme Right Calibration Marker	RADIATION COUPLING Use six turn loop across generator output. Place close to cabinet back.	Oscillator trimmer C2-B for maximum
1400 Kc.	Third Calibration from Right		Antenna Trimmer C2-A for maximum

Check tracking at 1000 Kc, 600 Kc, and 535 Kc to be sure oscillator is set correctly.

©John F. Rider

Compliments of www.nucow.com

MODEL 05RA2-43-8515A

ELECTRICAL SPECIFICATIONS

Power Supply.....115 volts, AC, 60-cycles; Chassis only 75 watts.

Frequency Ranges.....Broadcast Band—535 to 1620 kc. FM Band—88 to 108 mc.

Intermediate Freq.....AM-455 kc.; FM-10.7 mc.

Selectivity.....AM-47 kc. broad at 1000 times signal, measured at 1000 kc.
I.F. FM-230 kc. broad at 2 times down.
I.F. FM-470 kc. broad at 10 times down.

AM Sensitivity.....(For .5 watt output)—200 microvolts per meter average.

FM Sensitivity.....(For .5 watt output)—12 microvolts average.

Power Output.....2.0 watts. 10% distortion. 4.5 watts maxmium.

Loud Speaker.....5"x7" PM. Voice coil impedance 3.2 ohms, 400 cycles.

Tube Complement.....
12AT7, FM-RF amp. mixer;
6BA7, AM converter, FM oscillator;
6BA7, IF amplifier;
6AU6, FM driver;
6AL5, FM detector;
6AV6, AM detector;
6V6 output;
5Y3, rectifier.

ALIGNMENT PROCEDURE

FM Band Section I. F. and R. F.

A non-metallic alignment tool must be used.

IMPORTANT

No alignment of the FM section of this radio should be attempted unless you are positive that the circuits are in need of adjustment and you have the necessary equipment.

All components used in this radio are extremely stable and the tuned circuits should require no adjustment over a long period of time.

NOTE

The following alignment is based on the use of the new Simpson vacuum tube voltmeter which has a "floating ground". In other words, the meter, when used as a vacuum tube voltmeter, can have both the positive and negative sides connected to points above ground and still give true readings. (See note "C" below.)

A standard AM signal generator is required.

FM —I. F. ALIGNMENT

Band Switch in FM Position. Dummy Antenna .1 Mfd

SIGNAL GENERATOR FREQUENCY	CONNECTION TO RADIO	VACUUM TUBE VOLT METER CONNECTION TO RADIO	ADJUSTMENTS TO BE MADE	ADJUST FOR
10.7 Mc. Use about .05 volt	Pin No. 1 of 6AU6	Pin No. 7 of 6AL5 and chassis	Bottom Core Primary of T9 Ratio Detector	Resonance should be about 3 volts
10.7 Mc. Use about .05 volt	Pin No. 1 of 6AU6	See note "A"	Top Core Secondary of T9 Ratio Detector	Zero. Use zero center scale See note "B"
10.7 Mc. Use about 1800 microvolts	Pin No. 1 of 6BA6	Pin No. 7 of 6AL5 and chassis	Primary and Secondary of T7. FM Driver IF See chassis view	Resonance should be about 3 volts
10.7 Mc. Use about 400 microvolts	Top end of C2-C	Pin No. 7 of 6AL5 and chassis	Primary and Secondary of T5. FM Input IF See chassis view	Resonance should be about 3 volts

NOTES ON FM — I. F. ALIGNMENT

NOTE "A"—Connect two resistors in series, 100K OHMS each, from Pin No. 7 of 6AL5 to chassis (Pin No. 5). These resistors must be matched within 5%. Connect vacuum tube voltmeter between the midpoint of the resistors and point zz.

NOTE "B"—If T9 has been tampered with, it is possible that no crossover point will be found at first. Careful adjustment of both primary and secondary is necessary.

NOTE "C"—To use a VTVM which does not have the "floating ground" feature, in step 2 above, connect "ground" side of VTVM to midpoint of resistors (Note "A") and "high" side to point zz.

GENERAL—Input signals should be adjusted to give approximately 3 volts. The ratio detector is operating at a reasonable level at this point and will give the truest indication of correct alignment with the procedure specified.

©John F. Rider

Compliments of www.nucow.com

MODEL 05RA2-43-8515A

FM—R. F. ALIGNMENT

Check pointer so that the right hand edge of the pointer skirt coincides with the right hand edge of dial marker at the extreme left when gang is closed.
For adjustment, see dial mechanism illustration.

SIGNAL GENERATOR FREQUENCY	POINTER	CONNECTION TO RADIO	ADJUST	V T V M CONNECTIONS
108 mc.	108 mc. Marker	FM antenna terminals	FM Osc. C3 for maximum	Pin No. 7 of 6AL5 to chassis.
98 mc.	Tune in Gen. Signal	See Note "B" below	FM Mixer C2-C for maximum	

NOTE "A"—If a signal generator with the above fundamental frequency is not available, it is sometimes possible to use harmonics. An alternate procedure is to use a local station carrier of known frequency to align the FM Band and to use the vacuum tube voltmeter as above for resonance indication. A weak carrier, however, will not produce 3 volts.

NOTE "B"—Connect 300 ohms in series with "hot" side of generator and connect to left hand screw of external FM Antenna Terminals. Connect cold side of generator to right hand screw.

REPLACEMENT OF DIAL CORDS

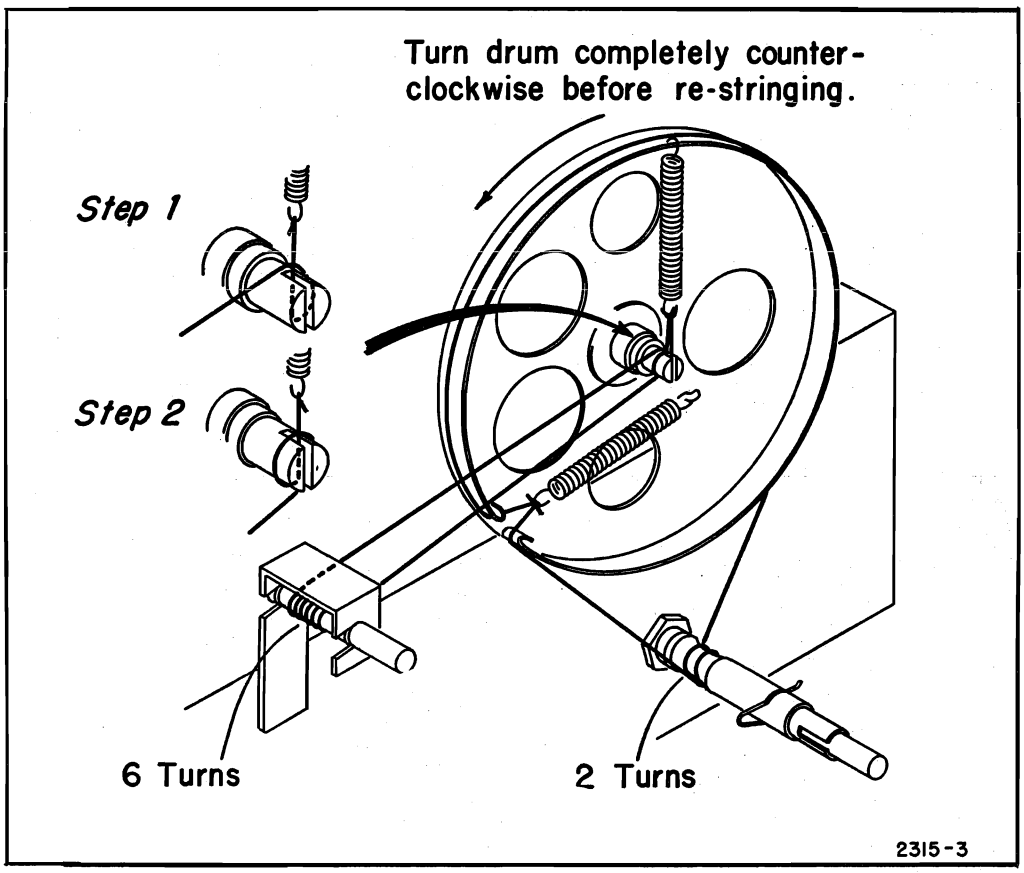

Pointer Stringing and Alignment

©John F. Rider

Compliments of www.nucow.com

MODEL 05RA2-43-8515A

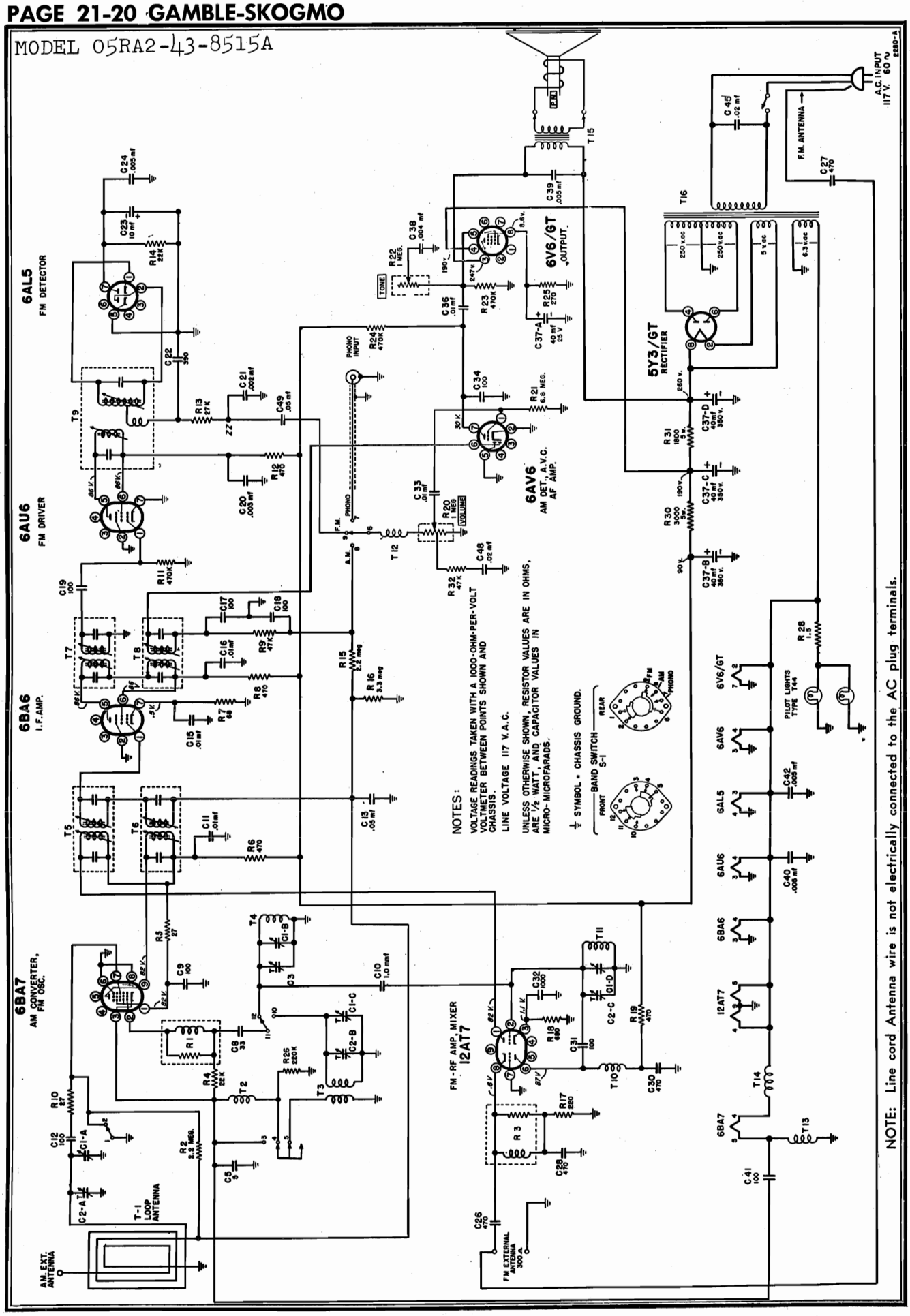

©John F. Rider

Compliments of www.nucow.com

MODEL 05RA2-43-8515A

REPLACEMENT PARTS INFORMATION

Please specify *PART* number and chassis model number when ordering replacements.

CAPACITORS

Ref. No.	Part No.	Description	Qty.
C1A,B,C,D	B-8A-18706	Gang tuning condenser	1
C2A,B,C		Trimmers on gang	3
C3	A-201-15142	Trimmer condenser	1
C5	C-8G-12166	5 mmf, ceramic, 10%	1
C8	C-8G-14172	33 mmf, ceramic, 10%	1
C9-31-41	C-8G-12759	100 mmf, ceramic, 10%	3
C10	A-8G-12495-2	1.0 mmf, ceramic, 20%	1
C11-16-36	C-8D-10761	.01 mfd, 400 volts, 20%	3
C12	C-8G-13131	100 mmf, ceramic, 10%	1
C13-49	C-8D-10770	.05 mfd, 200 volts, 20%	2
C15-33	C-8D-11738	.01 mfd, 200 volts, 20%	2
C17-18	A-8F-13127	.0001 mfd, dual mica, +30% —20%	1
C-19-34	C-8G-11734	100 mmf, ceramic, 10%	2
C20	C-8D-11013	.003 mfd, 600 volts, 10%	1
C21	C-8G-16049	.002 mf, ceramic, 10%	1
C22	C-8F3-120	390 mmf, mica, 10%	1
C23	A-8C-18128	10 mfd, 50 volts	1
C24-40-42	A-8G-13962	.005 mfd, ceramic	3
C26-27-28-30	C-8G-11732	470 mmf, ceramic, 20%	4
C32	C-8G-13201	1000 mmf, ceramic	1
C37-A,B,C,D	A-8C-18125	40-40-40 mfd x 350 volts, 40 mfd x 25 volts	1
C38	C-8D-10788	.004 mfd, 600 volts, 20%	1
C39	C-8D-10935	.005 mfd, 600 volts, +40% 15%	1
C45	C-8J-11321	.02 mfd, 600 volts, 20%	1
C48	C-8D-11304	.02 mfd, 200 volts, 20%	1

RESISTORS

Ref. No.	Part No.	Description	Qty.
R1	A-16B-16615	Suppressor	1
R2-15	C-9B1-33	2.2 megohms, 1/2 watt, 20%	2
R3	A-16B-16616	Suppressor	1
R4-14	C-9B1-78	22K ohms, 1/2 watt, 10%	2
R5-10	C-9B1-43	27 ohms, 1/2 watt, 10%	1
R6-8-12-19	C-9B1-58	470 ohms, 1/2 watt, 10%	4
R7	C-9B1-48	68 ohms, 1/2 watt, 10%	1
R9-32	C-9B1-82	47K ohms, 1/2 watt, 10%	2
R11-23-24	C-9B1-94	470K ohms, 1/2 watt, 10%	3
R13	C-9B1-79	27K ohms, 1/2 watt, 10%	1
R16	C-9B1-34	3.3 megohms, 1/2 watt, 20%	1
R17	C-9B1-54	220 ohms, 1/2 watt, 10%	1
R18	C-9B1-60	680 ohms, 1/2 watt, 10%	1
R20-22	A-10A-18703	Dual volume and Tone control	2
R21	C-9B1-36	6.8 megohms, 1/2 watt, 20%	1
R25	C-9B1-55	270 ohms, 1/2 watt, 10%	1
R26	C-9B1-27	220K ohms, 1/2 watt, 20%	1
R28	C-9C2-1065	1.5 ohms, 1 watt, 10%	1
R30	C-9C12-2059	3000 ohms, 5 watts, 5%	1
R31	C-9C12-1102	1800 ohms, 5 watts, 10%	1

COILS, TRANSFORMERS, CHOKES

Ref. No.	Part No.	Description	Qty.
T1	C-13E-18849	Loop antenna assembly	1
T2-T13-T14	A-16B-16023	RF choke coil assembly	3
T3	B-13D-16611	Oscillator coil (AM)	1
T4	A-13D-16617	Oscillator coil (FM)	1
T5	B-13A-18567	Input IF transformer (FM)	1
T6	B-13A-16662	Input IF transformer (AM)	1
T7	B-13B-18568	Output IF transformer (FM)	1
T8	B-13A-16662	Output IF transformer (AM)	1
T9	B-13M-16001	Ratio detector transformer	1
T10	A-16B-16613	RF choke coil	1
T11	A-13E-16618	RF coil (FM)	1
T12	A-16A-16637	RF choke coil	1
T15	B-12C-18143	Output transformer	1
T16	B-12A-18856	Power transformer	1

MISCELLANEOUS

Part No.	Description	Qty.
A-15B-13430	9-prong, miniature tube socket	2
A-15B-10440	8-prong, octal socket	2
A-15C-16007	7-prong, miniature tube socket	4
B-20A-18705	Band change switch	1
B-14M-18147	AC line cord and plug	1
A-23A-16328	Line cord lock	1
A-19A-12170	Phono pick-up socket	1
A-7B-13050	Dipole socket	1
A-3A-18704	Tuning shaft	1
A-2D-10033	Tuning shaft bracket	1
B-47A-18855	Pilot light assembly	1
A-46A-11971	Pilot light bulb, T-51	2
B-18A-18857	5" x 7" PM speaker	1

DIAL PARTS

Part No.	Description	Qty.
A-3A-18702	Pointer shaft	1
A-2D-18701	Pointer bracket	1
A-53A-10989	Dial string	13"
B-53A-18547	Dial string	20"
A-49A-10078	Tension spring	2
B-2G-18792	Dial pointer	1
A-43D-18853	Compression spring	1
B-2M-19071	Dial scale	1

CABINET PARTS

Part No.	Description	Qty.
R-5C-18750-78	Bakelite cabinet	1
C-24M-18858	Baffle board	1
B-23K-18863	Grille cloth	1
B-5B-18832-80	Knob (tone-tuning)	2
B-5B-18831-80	Knob	1
B-5B-18867-80	Knob	1

©John F. Rider

Compliments of www.nucow.com

MODEL 05RA4-43-9876A

ELECTRICAL SPECIFICATIONS

Power Supply.....90 volts "B"; 9 volts "A"
117 volts AC/DC

Frequency Range.....540-1605 KC

I.F. Frequency.....455 KC

Antenna .....Self-contained loop

Tuning .....3 gang capacitor

Speaker.....5" P.M. Dynamic
3.2 ohm voice coil

Power Consumption.....11 watts

Power Output.....250 milliwatts maximum
120 milliwatts @ 10%

Sensitivity, loop.....100 microvolts/meter average
for 50 milliwatts

Selectivity..45 KC broad at 1000 times signal at 1000 KC

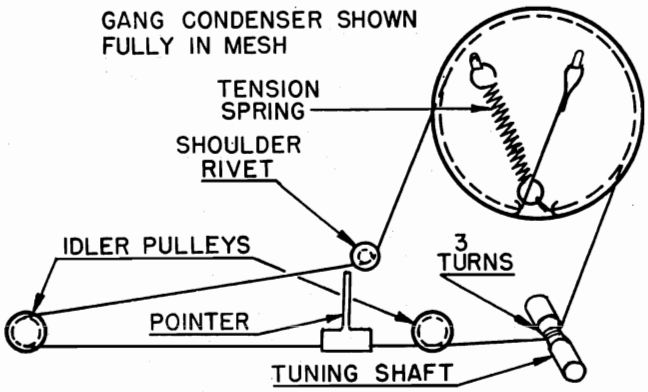

Fig. 1—Dial Stringing

BATTERIES

2 CORONADO 45 volt portable "B" batteries, #43-302
2 CORONADO 4½ volt portable "A" batteries, #43-266

THIS RECEIVER CONTAINS THE FOLLOWING:

1U4 R.F. Amplifier
1R5 Oscillator - Converter
1U4 I.F. Amplifier
1U5 Detector - Audio - AVC
3V4 Power Output

Selenium Rectifier

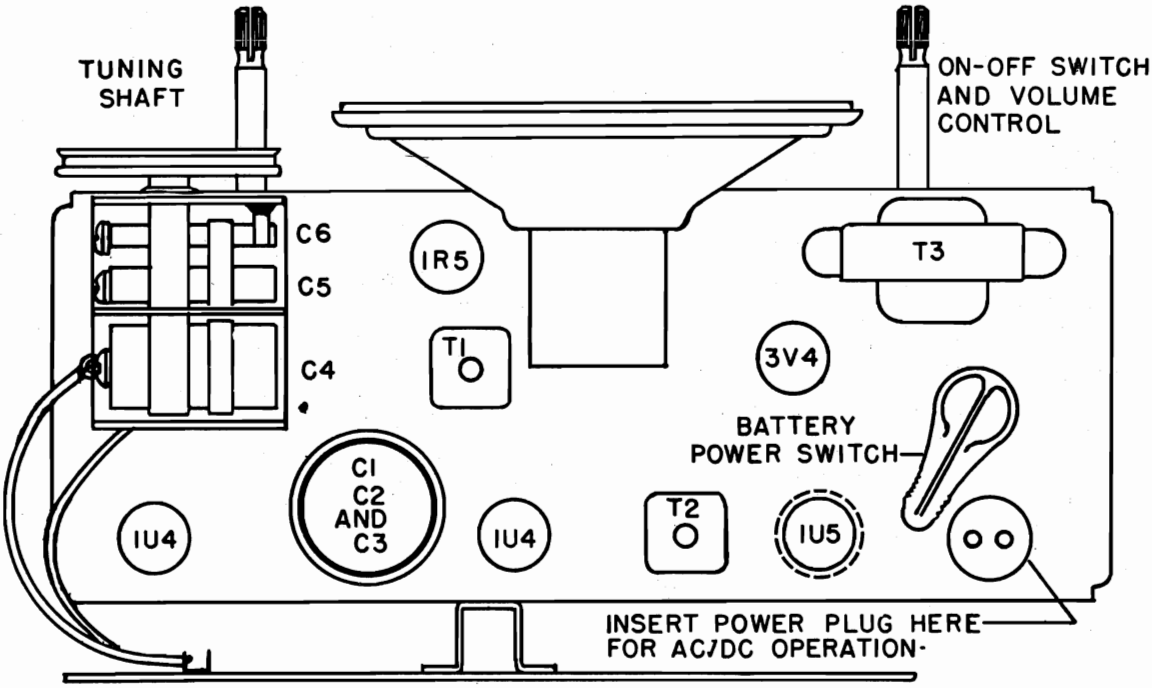

Fig. 2. Top Chassis View.

©John F. Rider

Compliments of www.nucow.com

MODEL 05RA4-43-9876A

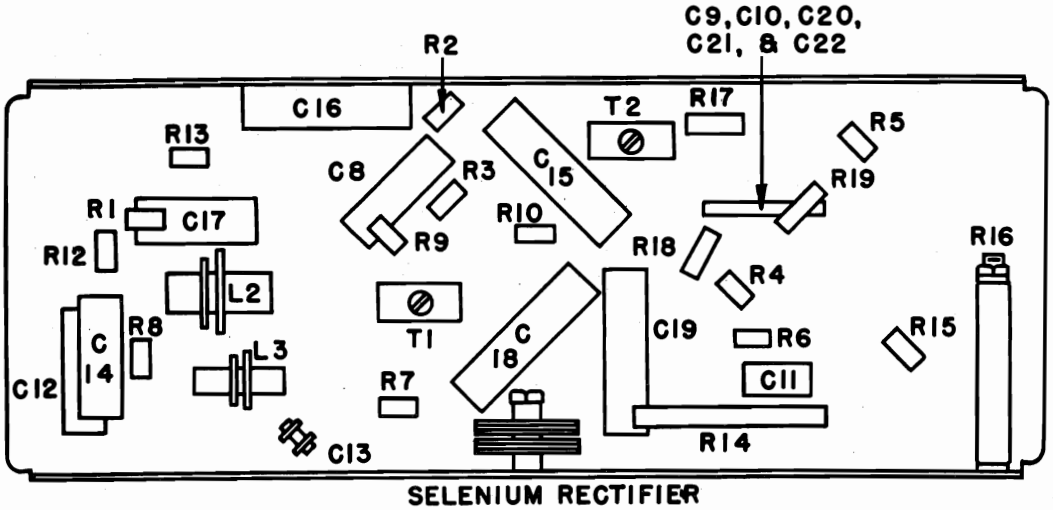

Fig. 3. Bottom Chassis View.

TO REMOVE CHASSIS FROM CABINET

Remove control knobs. Loosen retaining brackets on rear apron of chassis. Remove shelf above batteries. Pull chassis straight back.

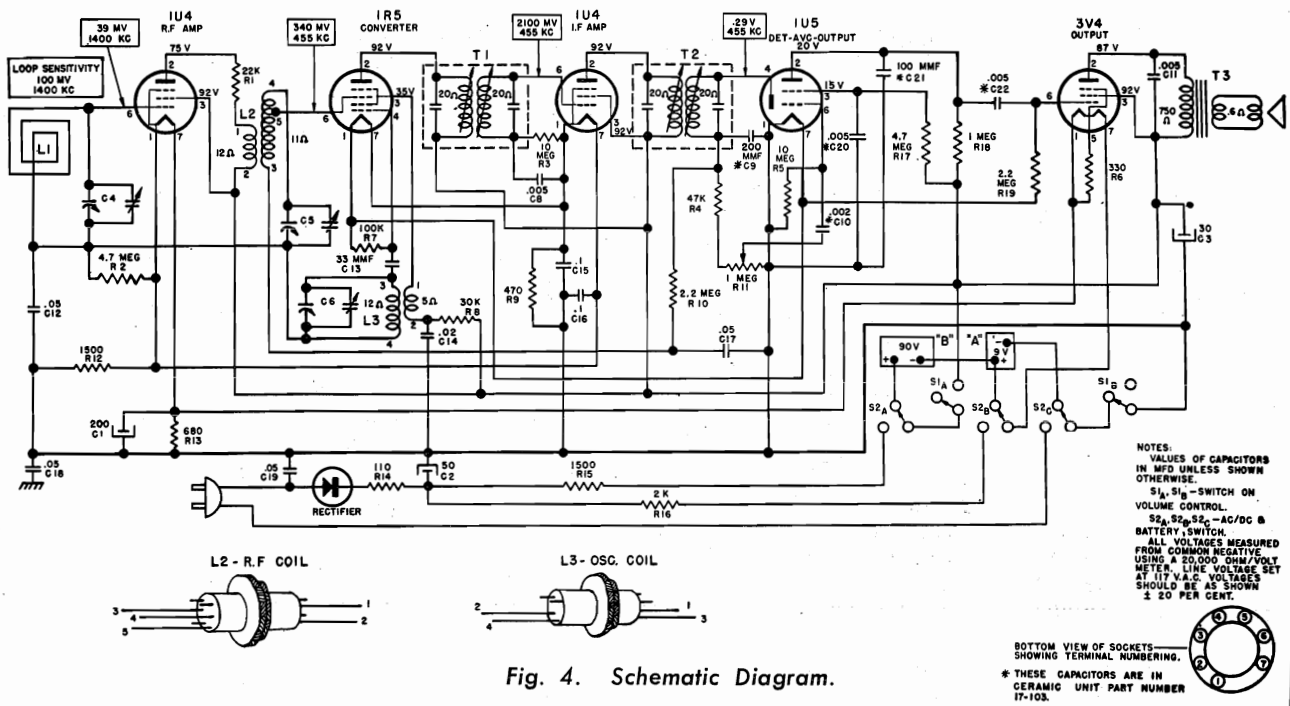

Fig. 4. Schematic Diagram.

ALIGNMENT PROCEDURE

Output meter reading to indicate 0.05 watt across voice coil	0.4 v.
Generator ground lead connected	To B- through 0.1 mfd. capacitor
Generator modulation	30%, 400 cycles
Position of volume control	Fully on
Position of pointer with tuner fully closed	Center of pointer lined up with extreme right dot on dial backing plate. (Chassis right side up.)

©John F. Rider

Compliments of www.nucow.com

MODEL 05RA4-43-9876A

Position of Tuner	Generator Freq.	Dummy Antenna	Generator Connection	Adjustments (in order shown)	Function	Max. Microvolts Input to produce .05 w. output
Min. Cap.	455 kc	0.1 mfd.	Pin #6 of 1U4 I-F Amp.	T2 (top and bottom)	I.F.	5000
Min. Cap.	455 kc	0.1 mfd.	Pin #6 of 1R5 Conv.	T1 (top and bottom)	I.F.	250
Min. Cap.	1610 kc	0.1 mfd.	Stator ant. tuner	C6	Osc.	
1400 kc	1400 kc	0.1 mfd.	Stator ant. tuner	C5	R.F.	30
1400 kc	1400 kc		Loosely coupled to loop	C4	Loop	

ALIGNMENT NOTES:

1. It is recommended that this set be connected to an isolation transformer when aligning on AC.
2. The alignment must be done in the order given above.
3. While making the above adjustments, keep the volume control set for maximum output and the signal generator output attenuated to avoid AVC action.

REPLACEMENT PARTS LIST

Ref. No.	Part No.	Description
		CAPACITORS
C1, C2, C3	18-296	Capacitor, electrolytic
C4, C5, C6	19-208	Capacitor, variable (3 gang)
C8, C11	16-153	Capacitor, .005 mfd. 600 v.
C9, C10, C20 C21, C22	17-103	Ceramic unit
C12, C17	16-152	Capacitor, .05 mfd. 200 v.
C13	15-186	Capacitor, 10 mmfd. mica
C14	16-150	Capacitor, .02 mfd. 400 v.
C15, C16	16-157	Capacitor, .1 mfd. 200 v.
C18, C19	16-179	Capacitor, .05 mfd. 400 v.
		RESISTORS
R1	60-744	Resistor, 22,000 ohm, ½ watt, 10%
R2, R17	60-669	Resistor, 4.7 megohm, ½ watt
R3, R5	60-728	Resistor, 10 megohm, ½ watt
R4	60-730	Resistor, 47,000 ohm, ½ watt
R6	60-704	Resistor, 330 ohm, ½ watt, 10%
R7	60-727	Resistor, 100,000 ohm, ½ watt
R8	60-676	Resistor, 30,000 ohm, ½ watt
R9	60-770	Resistor, 470 ohm, ½ watt, 10%
R10, R19	60-726	Resistor, 2.2 megohm, ½ watt
R11, S1	24-186	Volume control and switch
R12, R15	60-729	Resistor, 1500 ohm, ½ watt, 10%
R13	60-708	Resistor, 680 ohm, ½ watt, 10%
R14	60-796	Resistor, 110 ohm, 3 watt, 10%
R16	60-757	Resistor, 2000 ohm, 10 watt, 5%
R18	60-668	Resistor, 1 megohm, ½ watt
		COILS AND TRANSFORMERS
L1	82-66	Loop, antenna
L2	10-535	R.F. coil
L3	10-553	Oscillator coil
T1, T2	10-508	Transformer, 1st and 2nd I.F.
T3	80-228	Transformer, output

		MISCELLANEOUS
	44-11	Baffle
	42-465	Cabinet
	84-419	Cable assembly, battery
	83-421	Clip, I.F., transformer mounting
	84-77	Cord, power AC/DC
	51-105	Cord, pointer travel, 28"
	67-552	Dial scale
	40-156	Escutcheon
	98-13	Grille cloth
	47-108	Grommet, variable condenser
	76-13	Insulator, electrolytic
	52-196	Knob, AC/DC/battery
	52-305	Knob, ON-OFF-VOLUME and TUNING
	45-121	Plug, AC/DC
	58-63	Pointer
	84-418	Pointer rail assembly
	83-642	Rectifier, selenium
	71-42	Shield, tube
	68-39	Socket, miniature wafer
	79-380	Speaker, 5" P.M.
	70-122	Spring, dial cord
	69-173	Switch, AC/DC/battery

©John F. Rider

Compliments of www.nucow.com

MODEL 05RA33-43-8120A, Bantam

SPECIFICATIONS

Power Supply	117 volts 60 cycle AC, 117 volts DC, 28 watts
Frequency Range	535 KC to 1630 KC
Intermediate Frequency	455 KC
Antenna	Hank style
Tuning	Variable Capacity
Speaker	4", P.M. voice coil impedance 3.2 ohms
Power Output	0.75 watt undistorted, 1.8 watts maximum
Sensitivity	500 uv average for 50 milliwatts output
Selectivity	70 KC broad at 100 times, signal at 1000 KC

Tubes used are as follows:

- 12BE6 Oscillator-Converter
- 12AT6 AVC, Detector, and Audio
- 50B5 Power Output
- 35W4 Power Rectifier

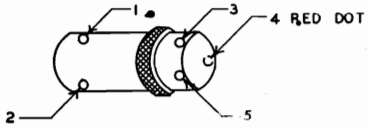

OSC COIL

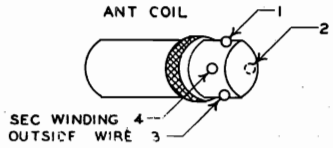

ANT COIL

CHASSIS GROUND

COMMON GROUND

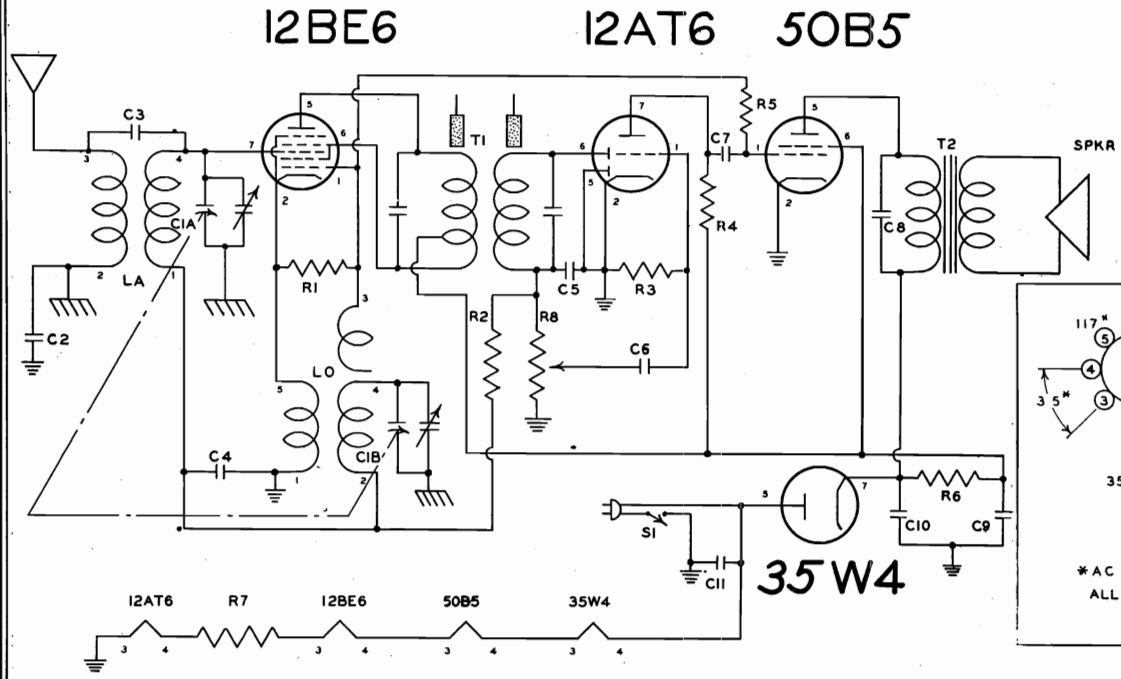

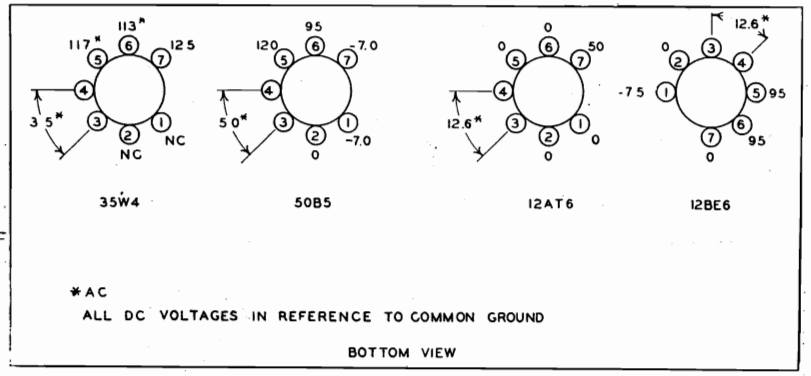

VOLTAGE DIAGRAM

©John F. Rider

Compliments of www.nucow.com

MODEL 05RA33-43-8120A,
Bantam

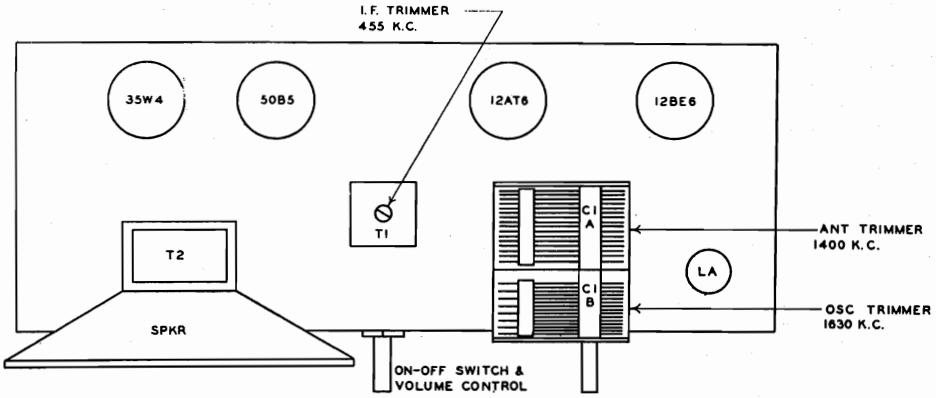

CHASSIS TOP VIEW

G5303

ALIGNMENT PROCEDURE

The following procedure is for use only by competent servicemen having the proper equipment.

The alignment should be made with volume control fully on, and the output from the signal generator as low as possible, to prevent AVC action from interfering with proper alignment.

With the output meter connected across the voice coil of the speaker, the output meter reading for 50 milliwatts is 0.4 volts, using a signal which is modulated 400 c.p.s.

Adjust all trimmers for maximum output. Repeat the alignment procedure given below as a final check.

CAUTION: This is an AC/DC receiver and when aligning the set it is necessary to isolate the signal generator or the receiver from the line by use of a transformer, or to place a .2 MFD condenser in each test lead of the signal generator.

SIGNAL GENERATOR Frequency	Dummy Antenna	Connection to Radio	POSITION OF VARIABLE	ADJUST FOR MAXIMUM OUTPUT
455 KC	100 MMFD	12BE6 Grid Stator C1A	Fully Open	T1
1630 KC	100 MMFD	12BE6 Grid Stator C1A	Fully Open	C1B Oscillator
1400 KC	100 MMFD	Coupled to Antenna Lead	Tune in Signal Generator	C1A Antenna

Connect low side of signal generator to chassis.

PARTS VALUES FOR T-64 GAMBLE'S AC-DC BANTAM

CIRCUIT SYMBOL	COMPONENTS PART NO.	DESCRIPTION	VALUE	RATING
C1A-C1B	C8120	Condenser, 2 gang	.05 MFD	200 volt
C2, C4	C052	Condenser, paper	5 MMFD	500 volt
C3	C55C	Condenser, ceramic	100 MMFD	500 volt
C5	C1005M	Condenser, mica	.002 MFD	600 volt
C6	C0026	Condenser, paper	.005 MFD	600 volt
C7, C8	C0056	Condenser, paper	20 MFD	150 volt
C9	C40-20-1.5	Electrolytic	40 MFD	150 volt
C10	C40-20-1.5	Electrolytic	.05 MFD	400 volt
C11	C054	Condenser, paper	22K ohm	1/2 watt
R1	R223.5	Resistor	2.2 megohm	1/2 watt
R2	R225.5	Resistor	10 megohm	1/2 watt
R3	R106.5	Resistor	220K ohm	1/2 watt
R4	R224.5	Resistor	330K ohm	1/2 watt
R5	R334.5	Resistor	2200 ohm	1/2 watt
R6	R222.5	Resistor	68 ohm	2 watt
R7	R6802	Resistor	1 megohm	
R8	VRT64	Volume control		
S1	VRT64	Switch S.P.S.T. on volume control		
LA	T64LA	Antenna coil		
LO	T64LO	Oscillator coil		
T1	T112-10	I.F. transformer		
T2	SPKT64-T	Output transformer		
SPKR	SPKT64-S	Speaker, 4" P.M.		

MECHANICAL PARTS

PART NO.	DESCRIPTION	PART NO.	DESCRIPTION
M-1701	Chassis T64	T-112-10-B	I.F. mounting clip
H-81644-6	Miniature tube socket, wafer	P-1701	Cabinet T64
W-1701	Line cord and plug	P-1706	Cabinet back
H-1701	Bushing T64	P-1704-A	Pointer knob
W-1702	Antenna hank	P-1704-B	Round knob

©John F. Rider

Compliments of www.nucow.com

MODEL 05RA37-43-8360A

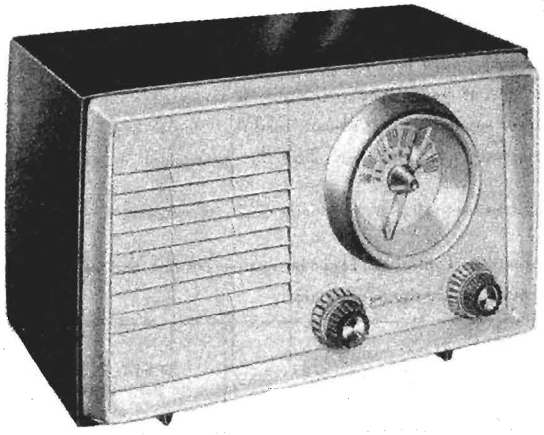

GENERAL DESCRIPTION

This radio is a 6 tube (including rectifier tube) AC-DC receiver housed in a beautiful plastic cabinet. Controls are provided on the front of the set for tuning, volume and tone operation. Special features include a built-in loop antenna, 3 section tuning condenser, automatic volume control, continuously variable tone control, beam power output tube and a permanent magnet dynamic speaker. Provision has been made for connection of an external antenna. The receiver is designed for reception of radio stations in the standard broadcast band between 540 and 1600 kilocycles.

ELECTRICAL SPECIFICATIONS

Power Supply:
117 volts A.C. 50 or 60 cycles or
117 volts D.C.

Frequency Range:
Broadcast 540-1600 Kc.

Intermediate Frequency:
455 Kc.

Antenna:
High impedance loop

Tuning:
3 section, shock mounted gang condenser

Speaker:
5 inch PM Dynamic
Voice coil impedance—3.2 ohms

Power Consumption:
30 watts

Power Output:
Undistorted — .6 watts
Maximum — 1 watt

Sensitivity—(Measured with signal injection at external antenna terminal and for 50 milliwatt output):
12 microvolts average

Selectivity:
40 Kc. broad at 1000 times signal, measured at 1000 Kc.

Tube and Dial Lamp Complement:

1	12BA6	R.F. Amplifier
1	12BE6	Converter
1	12BA6	I.F. Amplifier
1	12AT6	Detector—A.V.C.—Audio Amplifier
1	35C5	Audio Output
1	35W4	Rectifier
1	#47	Dial Lamp

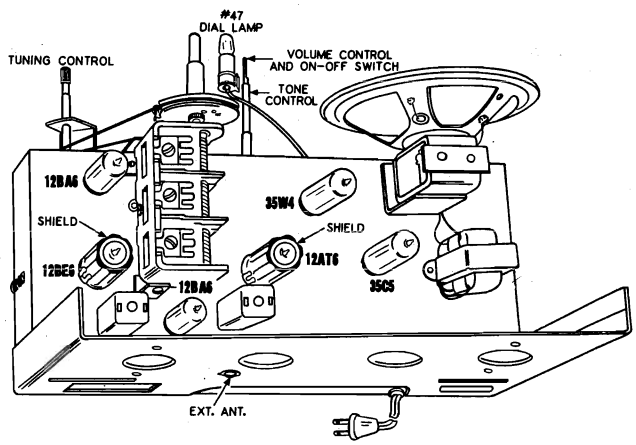

DIAL CORD ARRANGEMENT

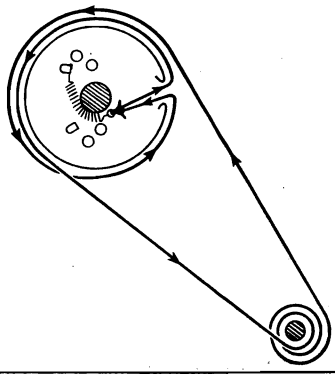

To string dial cord, turn the main drive drum to maximum counter-clockwise position and use following parts:

114955 Clip on end of cord

117057 Cord (2 feet)

505161 Tension Spring

©John F. Rider

Compliments of www.nucow.com

MODEL 05RA37-43-8360A

ALIGNMENT PROCEDURE

1. Remove chassis from cabinet. Allow loop antenna to remain attached to chassis.
2. With gang condenser fully closed, dial pointer should be in the position indicated by the last division below 55 on the dial. If it is set incorrectly, hold gang in this position and reset pointer.
3. Connect an output meter across the speaker voice coil or from plate of 35C5 to B- through a 0.1 Mfd. condenser. (See voltage chart for convenient B- connection.)
4. Connect ground lead of signal generator to B- lug.

CAUTION: If your signal generator is designed with an AC-DC power supply, connect ground lead to B- lug through a .25 Mfd. condenser. (See voltage chart for convenient B- connection.)

5. Set tone control to its maximum clockwise position.
6. Set volume control to maximum volume position and use a weak signal from the signal generator.

RANGE	SIGNAL GENERATOR		DUMMY ANTENNA	GANG CONDENSER SETTING	ADJUST SLUGS OR TRIMMERS
	FREQUENCY SETTING	CONNECTION AT RADIO			
I.F. 455 KC	455 KC	Grid pin #7 of 12BE6 Converter tube.	0.1 Mfd. Condenser	Any point where it does not affect the signal.	(2nd I.F.) #1 & #2 for maximum output
	455 KC	Grid pin #7 of 12BE6 Converter tube.	0.1 Mfd. Condenser	Any point where it does not affect the signal.	(1st I.F.) #3 & #4 for maximum output
BROADCAST 540—1600 KC	1600 KC	External Antenna Terminal on Loop Frame.	200 Mmfd. Condenser	1600 KC	(Oscillator) Trimmer #5 for maximum output
	1500 KC	External Antenna Terminal on Loop Frame.	200 Mmfd. Condenser	Tune to 1500 KC generator signal	(R.F.) Trimmer #6 for maximum output
	1500 KC	External Antenna Terminal on Loop Frame.	200 Mmfd. Condenser	Tune to 1500 KC generator signal	(Antenna) Trimmer #7 for maximum output

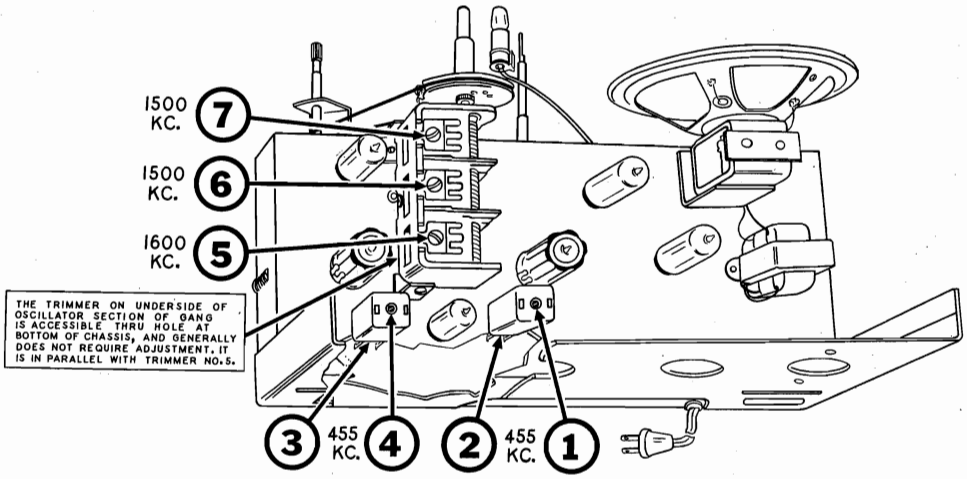

TRIMMER LOCATION CHART

©John F. Rider

Compliments of www.nucow.com

MODEL 05RA37-43-8360A

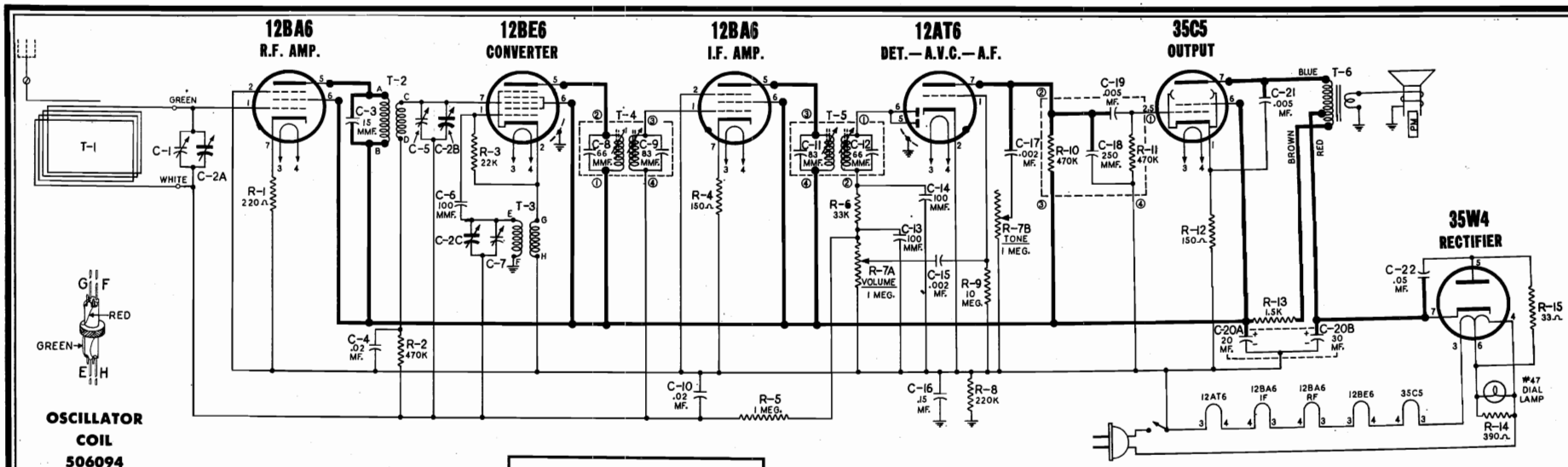

OSCILLATOR COIL 506094

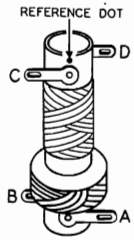

R.F. COIL 508692

I.F.—455KC

SOCKET VOLTAGES

1. All measurements made with a voltmeter having a sensitivity of 1000 ohms per volt except where indicated by (*). The (*) symbol designates a vacuum tube voltmeter measurement.
2. Terminals on loop antenna are shorted together to minimize noise signal pickup.
3. Dial tuned to 540 Kc.
4. Volume control set to maximum with no signal.
5. Tone control set at its maximum clockwise position.

NOTE A: The center stud of this tube must be connected to B- to reduce capacity coupling between pins. Oscillation may result if this connection is omitted.

Lettered terminals in illustration correspond to similarly lettered terminals on the circuit diagram.

117 VOLT 60 CYCLE A.C. POWER SUPPLY USED FOR THESE MEASUREMENTS. ALL VOLTAGES MEASURED BETWEEN SOCKET TERMINALS AND B- LUG UNLESS OTHERWISE INDICATED.

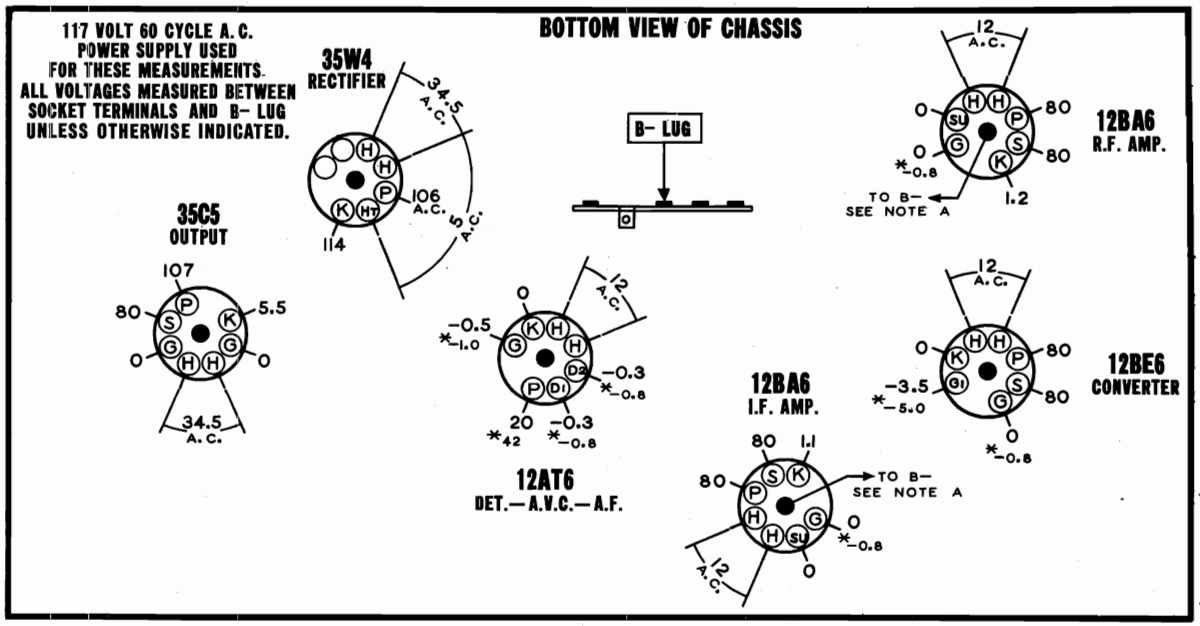

©John F. Rider

Compliments of www.nucow.com

REPLACEMENT PARTS LIST

REF. NO.	DESCRIPTION	PART NO.
	CONDENSERS	
C- 1	Condenser—trimmer; part of Gang Condenser C-2	———
C- 2	Condenser—variable gang (with drum)	508584
C- 3	Condenser—ceramic 15 Mmfd. 500 volt. (Temperature Compensating)	513405
C- 4	Condenser—.02 Mfd. 400 volt	512016
C- 5	Condenser—trimmer; part of Gang Condenser C-2	———
C- 6	Condenser—mica; 100 Mmfd. 500 volt	512503
C- 7	Condenser—trimmer; part of Gang Condenser C-2	———
C- 8	Condenser—ceramic 66 Mmfd.; part of 1st I.F. Transformer T-4	———
C- 9	Condenser—ceramic 83 Mmfd.; part of 1st I.F. Transformer T-4	———
C-10	Condenser—.02 Mmfd. 400 volt	512016
C-11	Condenser—ceramic 83 Mmfd.; part of 2nd I.F. Transformer T-5	———
C-12	Condenser—ceramic 66 Mmfd.; part of 2nd I.F. Transformer T-5	———
C-13, C-14	Condenser—mica 100 Mmf. 500 volt	512503
C-15	Condenser—.002 Mfd. 600 volt	512002
C-16	Condenser—.15 Mfd. 400 volt	512040
C-17	Condenser—.002 Mfd. 600 volt	512002
C-18	Condenser—ceramic 250 Mmfd. 450 volt; part of Audio Coupling Unit, see miscellaneous listing	———
C-19	Condenser—ceramic .005 Mfd. 450 volt; part of Audio Coupling Unit, see miscellaneous listing	———
C-20A, C-20B	Condenser—electrolytic A—20 Mfd. 150 volt B—30 Mfd. 150 volt	508147
C-21	Condenser—.005 Mfd. 600 volt	512006
C-22	Condenser—.05 Mmd. 600 volt	512030
	RESISTORS	
R- 1	Resistor—carbon 220 Ohms ½ watt	510125
R- 2	Resistor—carbon 470,000 Ohms ½ watt	510185
R- 3	Resistor—carbon 22,000 Ohms ½ watt	510161
R- 4	Resistor—carbon 150 Ohms ± 10% ½ watt	510121
R- 5	Resistor—carbon 1 Meg. ½ watt	510191
R- 6	Resistor—carbon 33,000 Ohms ½ watt	510164
R- 7A, R- 7B	Volume Control and ON-OFF Switch—1 Meg. Tone Control—1 Meg.	508583
R- 8	Resistor—carbon 220,000 Ohms ½ watt	510179
R- 9	Resistor—carbon 10 Meg. ½ watt	510197
R-10, R-11	Resistor—carbon 470,000 Ohms 1/5 watt; part of Audio Coupling Unit, see miscellaneous listing	———
R-12	Resistor—carbon 150 Ohms ± 10% ½ watt	510121
R-13	Resistor—carbon 1500 Ohms 1 watt	510240
R-14	Resistor—carbon 390 Ohms ± 10% ½ watt	510129
R-15	Resistor—carbon 33 Ohms 1 Watt	510210

REF. NO.	DESCRIPTION	PART NO.
	TRANSFORMER AND COILS	
T- 1	Loop Antenna	508740
T- 2	Coil—R.F.	508692
T- 3	Coil—oscillator	506094
T- 4	Transformer—1st I.F.	505867
T- 5	Transformer—2nd I.F.	505867
T- 6	Transformer—output	508146
	DIAL AND TUNING PARTS	
	"C" washer for tuning shaft	505165
	Clip—retainer on end of dial cord	114955
	Cord—dial drive (2 ft. required)	117057
	Dial cup and bracket	508686
	Dial scale (plastic)	508690
	Pointer	508653
	Shaft, tuning	508587
	Spring, dial cord tension	505161
	Window for dial; clear plastic	508601
	MISCELLANEOUS	
	Audio Coupling Unit A—Condensor—ceramic .005 Mfd. 450 volt B—Resistor—carbon 470,000 Ohms 1/5 watt C—Condensor—ceramic 250 Mmfd. 450 volt D—Resistor—carbon 470,000 Ohms 1/5 watt	505858
	Base for tube shield (miniature)	505368
	Back for cabinet	508244
	Cabinet	508759
	Clip for mounting R.F. coil	112745
	Clip for mounting I.F. transformer	505101
	Clip for mounting loop antenna	508149
	Clip retains cabinet back	508235
	Diffuser for dial light	508689
	Knob—tone (clear plastic)	508628
	Knob—"TUNING" (brown and clear)	508602
	Knob—"VOLUME-ON" (brown)	508629
	Lamp—dial (Mazda #47) 6-8 V. 150 Ma.	118921
	Screw #8 x 7/8" chassis mounting	18785
	Socket—dial lamp (with leads)	500499
	Socket—miniature (7 pin)	507364
	Shield pilot light	508652
	Shield, tube (miniature)	505367
	Speaker—P.M. Dynamic (5")	508699

©John F. Rider
Compliments of www.nucow.com

MODELS 15RA38-43-8235A,
15RA38-43-8236A

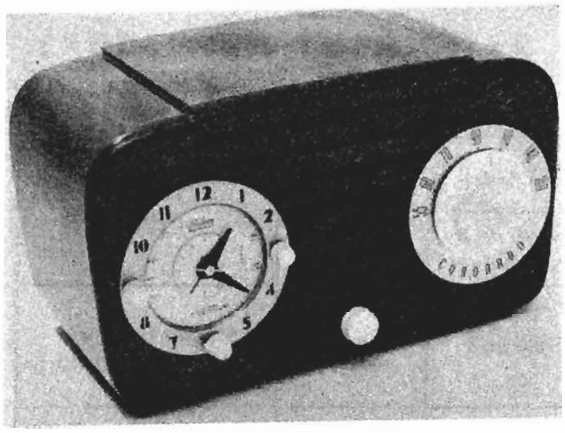

ELECTRICAL SPECIFICATIONS

Power Supply:—105-125 Volts AC, 60 Cycles
Freq. Range:—540-1650 Kilocycles
Intermediate Frequency:—455 Kilocycles
Antenna:—Duron high impedance loop with external antenna terminal
Tuning:—Shock mounted, 2 section gang condenser, direct knob drive
Speaker:—4 inch PM Voice Coil Impedance 3.2 OHM
Power Consumption:—30 Watts
Power Output:—1.6 Watts Max., 10% distortion. 95 Watts
Sensitivity:—Measured with signal radiated by signal generator into receiver loop antenna for 05 W output 400 μV 600 KC; 250 μV 1000 KC; 200 μV 1500 KC
Selectivity:—Bandwidths 2 times down 10 KC; 10 times down 22 KC; 100 times down 22 KC; 1000 times down 76 KC

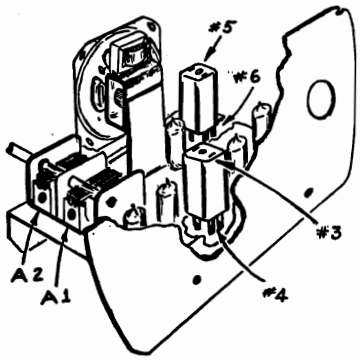

GENERAL DESCRIPTION

This 5-Tube AC Receiver (including rectifier tube) houses a Telechron Electric Clock Movement which actuates contacts that connect the receiver to the power line at a pre-set time.

The Clock "Radio" Control Knob located at nine o'clock position is a single pole double thrown switch. (A)—Thrown counter clockwise it connects the line to the clock contacter for automatic closing by the clock movement. (B)—In mid-position the receiver is disconnected (Lullaby Time Switch being at O). (C)—Thrown clockwise closes the line to the receiver.

The "Lullaby" Switch Knob located at six o'clock position is a time switch which closes the line to the receiver for the number of minutes its adjustment calls for.

The "Alarm" Control located at three o'clock position when pulled out engages the alarm setting position. When in out position turns on buzzer alarm approximately 10 minutes after radio circuit.

Tuning and volume controls are provided.

An external antenna connection is provided.

TUBE COMPLEMENT

12BE6 Converter

12BA6 I.F. Amplifier

12AT6 Det. AVC-AUDIO

50C5 Power Output

35W4 Rectifier

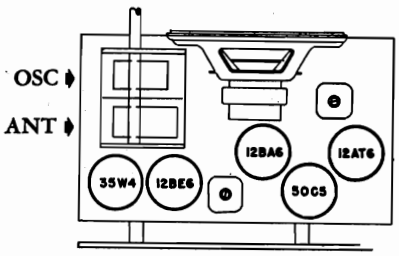

©John F. Rider

Compliments of www.nucow.com

MODELS 15RA38-43-8235A,
15RA38-43-8236A

ALIGNMENT PROCEDURE

- Output meter across voice coil (3.2 ohm)
- Volume control at maximum for all adjustments.
- Align for maximum output. Reduce input as needed to keep output near 1.28 volts (0.5 watt).

SIGNAL GENERATOR				*TUNER SETTING*	*ADJUST TRIMMERS TO MAXIMUM OUTPUT (in order shown)*
Frequency	*Coupling Capacitor*	*Connections to Receiver*	*Ground Connection*		
455 kc	0.1 mfd.	12BE6 grid	B—	Rotor full open (Plates out of mesh)	Input and output slugs of IF cans
1650 kc	0.1 mfd.	12BE6 grid	B—	Rotor full open (Plates out of mesh)	Oscillator trimmer A2
1500 kc		Radiating Loop		1500 kc	Antenna trimmer A1

REPLACEMENT PARTS LIST

Ref. No.	*Part No.*	*DESCRIPTION*
		CAPACITORS
C1	30-15	Variable Condenser, 2 gang
C2	31-13	40 mfd.—40 mfd., 150 volt dual electrolytic condenser
C3	32-32	.2 mfd., 200 volt, paper
C4	32-5	.05 mfd., 400 volt, paper
C5	32-4	.05 mfd., 200 volt, paper
C6	32-1	.01 mfd., 400 volt, paper
C7	32-1	.01 mfd., 400 volt, paper
C8	32-20	.005 mfd., 600 volt, paper
C9	35-4	.0001 mfd., 500 volt, mica
C10	35-4	.0001 mfd., 500 volt, mica
		RESISTORS
R1	20-73	1500 ohm, 1 watt 20%
R2	20-57	10 megohm, ¼ watt 20%
R3	20-92	470,000 ohm, ¼ watt 20%
R4	20-92	470,000 ohm, ¼ watt 20%
R5	20-81	150 ohm, ½ watt 20%
R6	20-89	150 ohm, ¼ watt 20%
R7	20-56	3.3 megohm, ¼ watt 20%
		RESISTORS— (Continued)
R8	20-82	22,000 ohm, ¼ watt 20%
R9	20-93	22 ohm, ½ watt 20%
R10	20-74	220,000 ohm, ¼ watt 20%
R11	50-15B	½ meg. volume control
		COILS AND TRANSFORMERS
O-1	60-9	Oscillator coil
T-2	61-11	Input IF transformer
T-3	61-11	Output IF transformer
LP-1	A125-32	Loop antenna
		MISCELLANEOUS
80-14	80-14	4 inch P.M. speaker with output transformer
	122-19	Selector knob
	122-15	Volume knob
	120-33	Cabinet—ivory / walnut { in carton / specify color
CK	140-6	Clock

©John F. Rider

Compliments of www.nucow.com

MODELS 15RA38-43-8235A,
15RA38-43-8236A

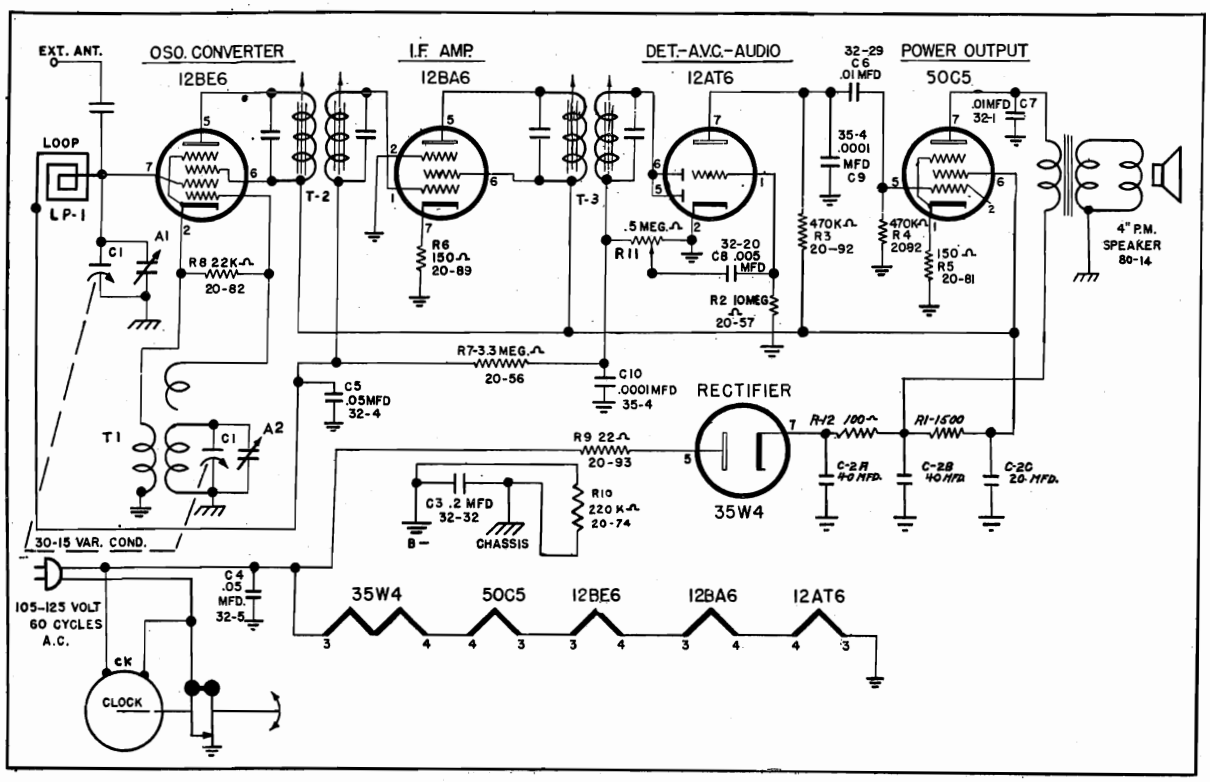

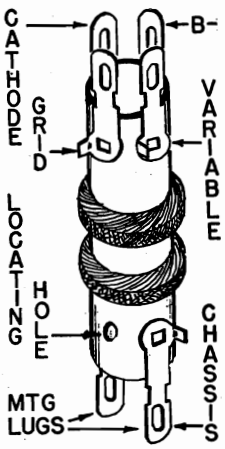

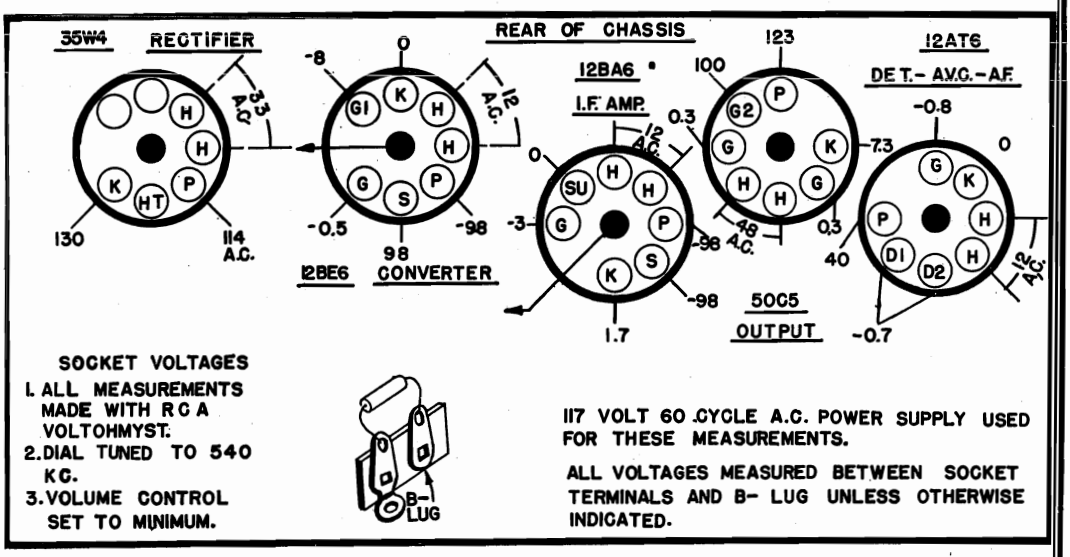

©John F. Rider

Compliments of www.nucow.com

MODELS 15RA38-43-8235A,
15RA38-43-8236A

SERVICING OF TELECHRON MOVEMENT

The Telechron movement is warranted under normal use and service against defects in workmanship and material for a period of one year from the date that the timer is sold by Telechron. Telechron agrees to repair or replace without charge any part or parts proved to be defective within the warranty period.

Telechron has established service stations which are prepared to service the movement unit when delivered by itself—that is when physically removed from the plastic cabinet. These service stations, under no circumstances, will service clocks not removed from cabinets. For information regarding service on Telechron clock movements, see your Service Reference File.

"CAUTION"—See instructions for clock removal below.

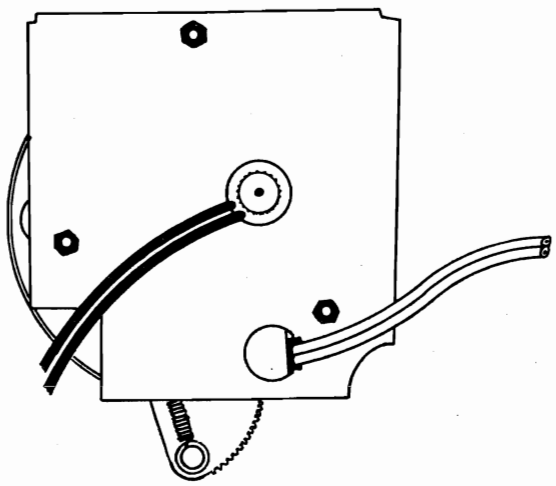

FIGURE A

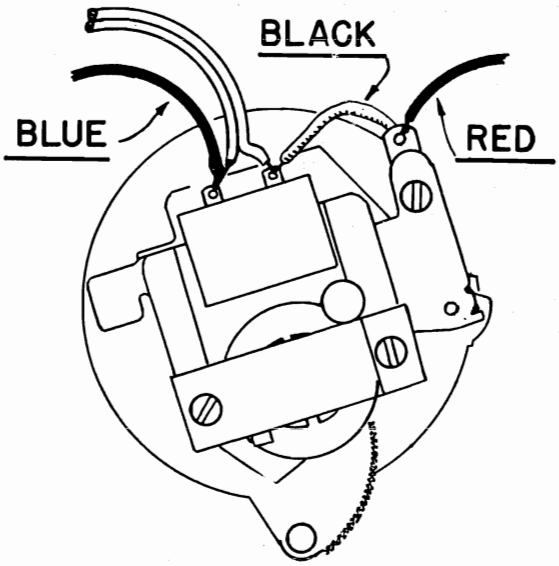

FIGURE B

To take clock movement out of cabinet proceed as follows:

Remove the following:

A—Line cord from power line.

B—Tuning knob, volume control knob, and chassis from cabinet.

C—3 nuts holding clock clamping shield shown in Figure A above.

D—As this shield is sufficiently pulled back unsolder red and blue wires and power cord shown in Figure B above.

E—Before movement can be withdrawn from cabinet, it is necessary to have the lullaby time switch in the full 60-minute position. With this switch in this position, the clock can be withdrawn by turning the rim clockwise approximately 5 to 10 degrees so that movement parts can pass openings in cabinet.

F—In shipping a movement to a service station, be certain that it is suitably packed to withstand transportation. Care should be taken with the glass crystal so that it is not subject to strain during shipment.

©John F. Rider

Compliments of www.nucow.com

Model 129

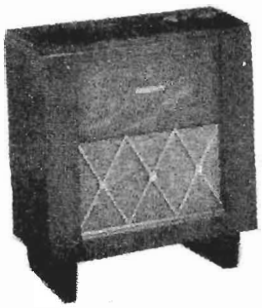

Model 131

SPECIFICATIONS

CABINET:

Model	129	131
Material	Wood	Wood
Height	$10\frac{13}{16}$ in.	$31\frac{1}{8}$ in.
Width	21 in.	28 in.
Depth	$14\frac{1}{4}$ in.	$14\frac{3}{4}$ in.

ELECTRICAL (INPUT):

Voltage (A-C only)	105-125
Frequency	60 cps
Wattage (on Radio)	35
Wattage (on Phono)	55

OPERATING FREQUENCIES:

Broadcast Band	540-1600 kc
I-F Amplifier	455 kc

POWER OUTPUT (117 Volts Line):

Undistorted	.95 watts
Maximum	2.2 watts

LOUDSPEAKER:

Model	129	131
Type	Alnico PM	Alnico PM
Outside Cone Diameter	5.25 inches	12 inches
Voice Coil Impedance at 400 cps	3.2 ohms	3.2 ohms

PHONOGRAPH PICKUP:

Type	Variable Reluctance
D-C Resistance	340 ohms

TUBE COMPLEMENT:

Converter-Oscillator	Type 12BE6
I-F Amplifier	Type 12SK7
Detector and Audio Amplifier	Type 12SQ7
Output	Type 50L6
Phono Preamplifier	Type 6SC7
Rectifier	Type 35Z5
Pilot Lamps	Mazda No. 47

GENERAL INFORMATION

The Models 129 and 131 are combination radio-phonograph receivers which differ in cabinet. Each employs a 6-tube superheterodyne receiver and a record changer, Model P15. The servicing information given herein is complete except that it does not cover servicing of the record changer. Service data on record changer Model P15 is covered in service notes ER-S-P15.

CAUTION

One side of the power line is connected to B−. Use an isolating transformer when making service adjustments with the chassis removed from the cabinet.

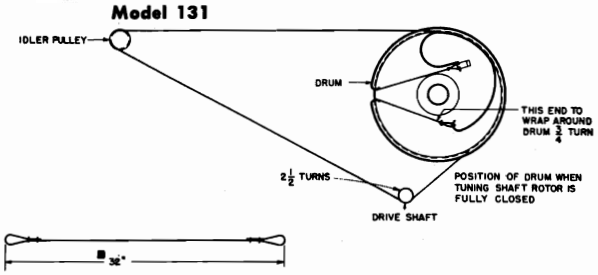

Fig. 1 Dial cord stringing

STAGE GAIN AND VOLTAGE CHECKS

Stage gain measurements may be made with a vacuum tube voltmeter to check circuit performance and to locate stages which are not operating properly. The gain values listed may have a tolerance of 20 per cent. Readings should be taken with the AVC shorted to B minus.

1. R-F STAGE GAINS.

Antenna to 12BE6 Grid	3.5 at 1000 kc
12BE6 Grid to 12SK7 Grid	50. at 455 kc

2. AUDIO GAIN.

The power output across the speaker voice coil should be approximately ½ watt with .95 volts at 400 cps applied between the high side of the volume control (R11) and ground.

3. OSCILLATOR GRID BIAS.

The d-c voltage developed across the oscillator grid leak resistor (R1) averages 4.5 volts at 1000 kc.

4. SOCKET PIN VOLTAGES.

Figure 4 shows typical tube pin voltages. All readings should be made from the pins to B minus unless otherwise indicated.

ELECTRICAL CIRCUIT ALIGNMENT

EQUIPMENT REQUIRED:

1. Test oscillator with audio tone modulation.
2. A-C output meter, 1½ volts full scale.
3. Insulated screwdriver.

ALIGNMENT PROCEDURE:

The Alignment Procedure is given in table form. All i-f alignments may be made with the chassis removed from the cabinet. However, the r-f alignments should be made with the chassis and loop mounted in the cabinet, as the relative position of the loop antenna with respect to the chassis materially affects the alignment.

The oscillator trimmer is accessible by tilting the chassis slightly in the cabinet. The antenna trimmer is on the loop and is accessible from the rear of the cabinet. The locations of these trimmers are shown in Figure 3.

The output meter should be connected across the loudspeaker voice coil terminals. The low side of the test oscillator should be connected to B minus; the high side should be connected as indicated in the Alignment Chart. During the entire alignment procedure, the radio volume control should be in its maximum position. The test oscillator output signal should be attenuated so that the output meter reading never exceeds 1¼ volts.

©John F. Rider

Compliments of www.nucow.com

MODELS 129, 131

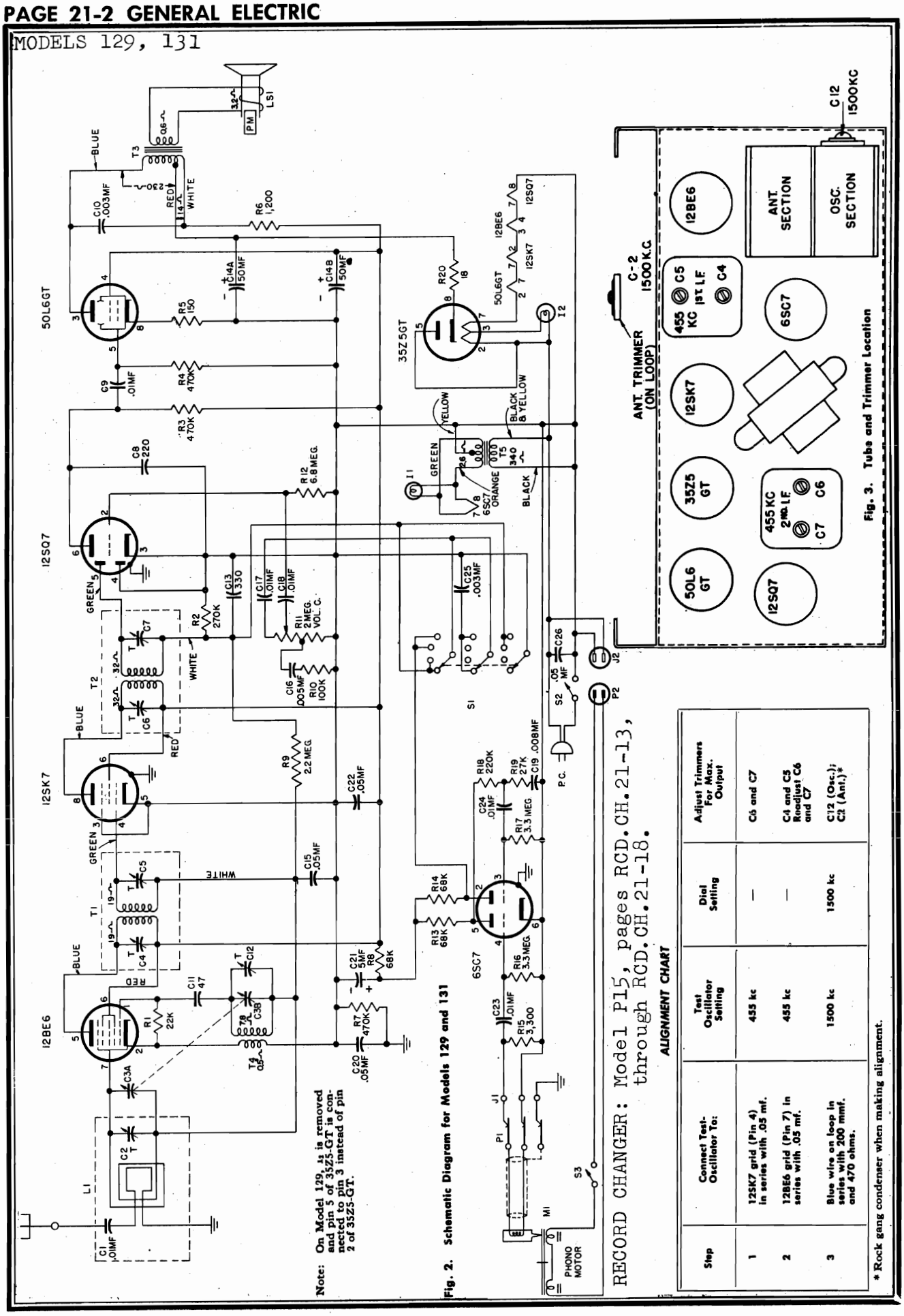

Note: On Model 129, is removed and pin 5 of 35Z5-GT is connected to pin 3 instead of pin 2 of 35Z5-GT.

Fig. 2. Schematic Diagram for Models 129 and 131

Fig. 3. Tube and Trimmer Location

RECORD CHANGER: Model P15, pages RCD.CH.21-13, through RCD.CH.21-18.

ALIGNMENT CHART

Step	Connect Test-Oscillator To:	Test Oscillator Setting	Dial Setting	Adjust Trimmers For Max. Output
1	12SK7 grid (Pin 4) in series with .05 mf.	455 kc	—	C6 and C7
2	12BE6 grid (Pin 7) in series with .05 mf.	455 kc	—	C4 and C5 Readjust C6 and C7
3	Blue wire on loop in series with 200 mmf. and 470 ohms.	1500 kc	1500 kc	C12 (Osc.); C2 (Ant.)*

* Rock gang condenser when making alignment.

©John F. Rider

Compliments of www.nucow.com

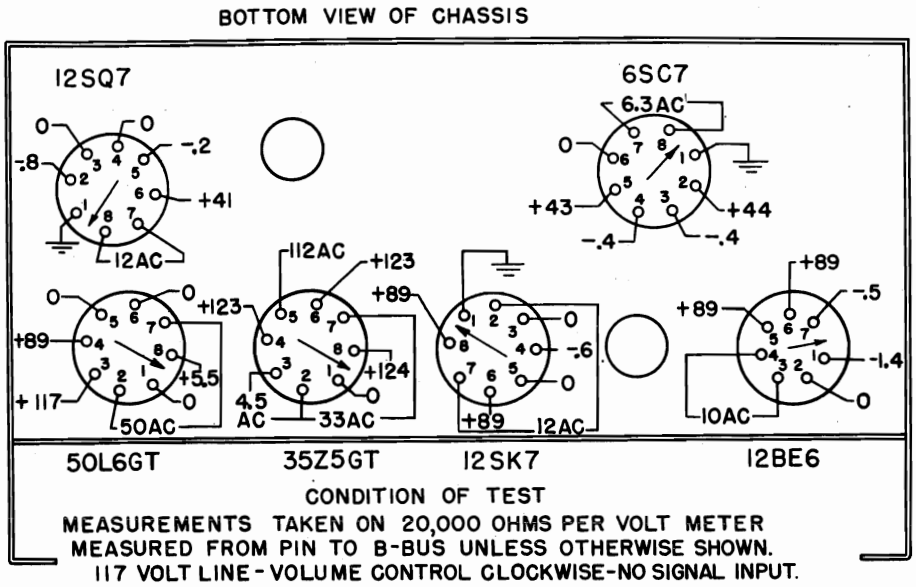

Fig. 4. Socket Voltage Diagram

REPLACEMENT PARTS LIST—MODELS 129, 131

Cat. No.	Symbol	Description
		UNIVERSAL REPLACEMENT PARTS
*UCC-008	C23	CAPACITOR—.01 mf., 200 v., paper
*UCC-020	C25	CAPACITOR—.003 mfd., 400 v., paper
*UCC-025	C17	CAPACITOR—.01 mf., 400 v., paper
*UCC-028	C15, 20, 22	CAPACITOR—.05 mf., 400 v., paper
*UCC-040	C1, 24	CAPACITOR—.01 mf., 600 v., paper
*UCC-045	C26	CAPACITOR—.05 mf., 600 v., paper
*UCU-020	C11	CAPACITOR—47 mmf., mica
*UCU-036	C8	CAPACITOR—220 mmf., mica
*UCU-040	C13	CAPACITOR—330 mmf., mica
*UOP-557		SPEAKER—Model 129, Same as S525D-7
*UOP-1241		SPEAKER—Model 131. Same as S1200D-7
*UOX-005		SPEAKER REPAIR KIT—For Model 131
*UOX-008		SPEAKER REPAIR KIT—For Model 129
*URD-029	R5	RESISTOR—150 ohms, ½ w., carbon
*URD-061	R15	RESISTOR—3300 ohms, ½ w., carbon
*URD-081	R1	RESISTOR—22,000 ohms, ½ w., carbon
*URD-083	R19	RESISTOR—27,000 ohms, ½ w., carbon
*URD-093	R8, 13, 14	RESISTOR—68,000 ohms, ½ w., carbon
*URD-097	R10	RESISTOR—100,000 ohms, ½ w., carbon
*URD-105	R18	RESISTOR—220,000 ohms, ½ w., carbon
*URD-107	R2	RESISTOR—270,000 ohms, ½ w., carbon
*URD-113	R3, 4, 7	RESISTOR—470,000 ohms, ½ w., carbon
*URD-129	R9	RESISTOR—2.2 meg., ½ w., carbon
*URD-133	R16, 17	RESISTOR—3.3 meg., ½ w., carbon
*URD-141	R12	RESISTOR—6.8 meg., ½ w., carbon
*URF-051	R6	RESISTOR—1200 ohms, 2 w., carbon
		SPECIALIZED REPLACEMENT PARTS
*RAC-051		LID—For Model 131 (mahogany)
*RAC-058		LID—For Model 129
*RAL-001		BEZEL—For pilot light
*RAM-003		BASE—2 for Model 131 (mahogany)
*RAV-045		CABINET—For Model 131 (mahogany)
*RAV-054		CABINET—Model 129
*RCC-040	C9	CAPACITOR—.01 mf., 600 v., paper
*RCC-074	C10	CAPACITOR—.003 mf., 600 v., paper
*RCC-082	C18	CAPACITOR—.01 mf., 200 v., paper
*RCC-084	C19	CAPACITOR—.008 mf., 400 v., paper
*RCC-085	C16	CAPACITOR—.005 mf., 200 v., paper
*RCE-050	C14A, 14B	CAPACITOR—50-50 mfd., 150 v., electrolytic
*RCE-056	C21	CAPACITOR—5 mf., 150 v., electrolytic
*RCT-026	C3A, 3B	CAPACITOR—Tuning capacitor
*RCY-005	C2	CAPACITOR—Trimmer for Model 129
*RCY-034	C2	CAPACITOR—Trimmer for Model 131
*RDC-032		CORD—Dial cord (10 yds. min.)
*RDK-036		KNOB—Plain
*RDK-039		KNOB—With arrow
*RDS-055		SCALE—Dial scale
*RDX-033		POINTER—Dial scale pointer assembly
*RHC-008		CLIP—For mounting filter capacitor
*RHG-015		GROMMET—Rubber grommet for mounting tuning capacitor
*RHJ-005		SPACER—For mounting tuning capacitor
*RHM-001		RING—Tuner shaft retaining ring
*RHM-014		STUD—For dial idler pulley
*RHM-016		CLIP—Oscillator coil clip
*RHM-037		CLIP—For mounting dial scale
*RHR-003		STUD—For mounting scale
*RHS-004		SPACER—Between loop and cabinet
*RJP-003	P2, 3	PLUG—Phono power
*RJS-006		SOCKET—Octal tube socket
*RJS-027		SOCKET—For dial light
*RJS-031		SOCKET—Tube socket for 6SC7
*RJS-034		SOCKET—Bezel pilot light socket
*RJS-049	J2, 3	SOCKET—Phono power
*RJS-092		SOCKET—Miniature for 12BE6
*RJS-097	J1	SOCKET—Phono pickup socket
*RJX-007	P1	—Phono plug
*RLC-061	T4	COIL—Oscillator coil
*RLL-026	L1	LOOP ASSEMBLY—Model 131
*RLL-028	L1	LOOP ASSEMBLY—Model 129
*RMM-034		HOOD—Hood for dial light
*RMM-054		SUPPORT—Lid support
*RMS-118		SPRING—Dial cord tension spring
*RMU-036		SHAFT—Tuning shaft
*RMW-037		PULLEY—Dial cord idler pulley
*RRC-060	R11	VOLUME CONTROL—2 meg.
*RRW-005	R21	RESISTOR—70 ohms, wirewound, for 50-cycle operation of phono motor
*RRW-008	R20	RESISTOR—18 ohms, 1 w., wirewound
*RSW-065	S1	SWITCH—Radio phono switch
*RTF-001	T5	TRANSFORMER—Filament transformer for 6SC7
*RTL-050	T1	TRANSFORMER—1st I-F transformer
*RTL-051	T2	TRANSFORMER—2nd I-F transformer
*RTO-038	T3	TRANSFORMER—Output transformer
*RWL-009		CORD—Power cord

* Used on previous production receivers.

©John F. Rider

Compliments of www.nucow.com

MODEL 218

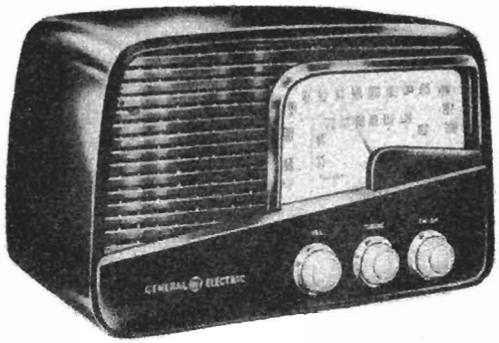

MODEL 218

CAUTION

ALWAYS USE AN ISOLATION TRANSFORMER IN THE RECEIVER POWER LINE, WHEN SERVICING OR ALIGNING THIS RECEIVER, TO PROTECT TEST EQUIPMENT.

SPECIFICATIONS

CABINET

Material	plastic
Color	mahogany
Height	8⅜ inches
Width	13⅝ inches
Depth	6⅞ inches

ELECTRICAL

Voltage	105-125 v. AC or DC
Frequency on AC	50 to 60 cps
Wattage	33 watts

TUNING RANGE

AM	540-1620 kc
FM	88-108 mc

INTERMEDIATE FREQUENCIES

AM	455 kc
FM	10.7 mc

POWER OUTPUT (120 VOLTS LINE)

Undistorted	1.1 watt
Maximum	1.8 watt

LOUDSPEAKER

Type	permanent magnet
Cone Diameter	5¼ inches
Voice Coil Impedance at 400 cps	3.2 ohms

TUBE COMPLEMENT

(V1)	FM R-F and 1st I-F Amplifier	12BA6
(V2)	Oscillator and Converter	12BE6
(V3)	I-F Amplifier	12BA6
(V4)	Limiter	12AU6
(V5)	FM Discriminator, AM Detector and Audio Amplifier	19T8
(V6)	Power Output	50B5

ANTENNA

AM	loop antenna
FM	power line antenna or 300-ohm FM antenna

GENERAL

Model 218 is a table model receiver providing reception on the AM and FM bands. The receiver is housed in a mahogany colored plastic cabinet.

The receiver has a built-in FM power line antenna; to operate from this antenna it is necessary to connect the brown wire coming out of the cabinet back to the right-hand screw of the antenna terminal strip.

On AM operation, the AM r-f signal is fed directly into the grid of the converter V2 through the 1st AM i-f transformer T2 into the grid of V3. From V3 the signal is fed to the second AM i-f transformer T5 and is detected by a diode section of V5 which is pin 6. The secondary of T1 which is in series with the primary of T2 offers a low impedance to the AM i-f frequency.

V1 (12BA6) in the FM reflex circuit acts both as an r-f and an i-f amplifier. The r-f signal is put into the grid (pin 1) of V1 through the secondary of T1. It is amplified by V1 and put into the grid of V2 the converter through capacitor C7. Choke L3 prevents the r-f signal from getting into the second FM i-f transformer T3. The 10.7 mc FM i-f is fed from the plate of V2 to the primary of T1 the 1st FM i-f transformer which now puts the FM i-f signal onto the grid of V1. From the plate of V1 the FM i-f signal is fed through choke L3 to the primary of T3 through to the grid of V3. The plate of V3 feeds the FM i-f signal through C50 in the primary of T5 to the 3rd FM i-f tuning coil T4 and through C21 to the grid of the limiter grid pin 1 of V4. The FM i-f signal is detected in T6 discriminator transformer and two diode sections of V5, pins 1 and 2.

STAGE GAIN AND VOLTAGE CHECKS

1. R-F AND I-F STAGE GAINS

Signal applied through an IRE dummy antenna:

V2 Grid to V3 Grid	38 at 455 kc
Dipole Terminals to V1 Grid	1.3 at 98 mc
V1 to V2 Grid	8.0 at 98 mc
V2 to V1 Grid	1.6 at 10.7 mc
V1 to V3 Grid	22 at 10.7 mc
V3 to V4 Grid	26 at 10.7 mc

2. AUDIO GAIN

.09 volts at 400 cps across the volume control with the volume control set at maximum should give approximately ½ watt output across the speaker voice coil.

3. OSCILLATOR GRID BIAS

D-c voltage developed across R6:
4.8 volts at 1000 kc
2.2 volts at 98 mc

4. SOCKET PIN VOLTAGES

Figure 4 shows typical tube pin voltages.

5. HUM MEASUREMENT

Hum measured across the voice coil of the speaker with the volume control at minimum and the band switch on AM should not exceed 7 millivolts.

On FM ground the limiter grid (pin 1 of V4) through a .01 mfd. capacitor and measure the hum across the voice coil terminals with the volume control at maximum. Hum should not exceed 15 millivolts.

ALIGNMENT

EQUIPMENT NECESSARY FOR METER ALIGNMENT

1. Signal generator G-E YGS-3, or equivalent.
2. 20,000 ohm-per-volt meter.
3. Output meter.
4. .01 mfd. capacitor.
5. Four-turn, six-inch diameter loop of bell wire for AM, r-f and oscillator alignment.
6. Isolation transformer.

NOTES FOR METER ALIGNMENT

1. Connect a 20,000 ohm-per-volt meter from junction of C29 and R18 to chassis. Use a ten-volt scale for steps 3, 4 and 5.

2. Connect a 20,000 ohm-per-volt meter from the grid of the limiter (pin 1 of V4) to cathode of limiter (pins 2 or 7 of V4) in series with a 200,000-ohm resistor. The resistor must be connected directly to the grid pin to minimize capacity loading and to isolate the i-f signal voltage from the meter. Keep signal generator down so that the meter does not indicate more than one volt at the grid (5 microamps through 200,000 ohms).

©John F. Rider

Compliments of www.nucow.com

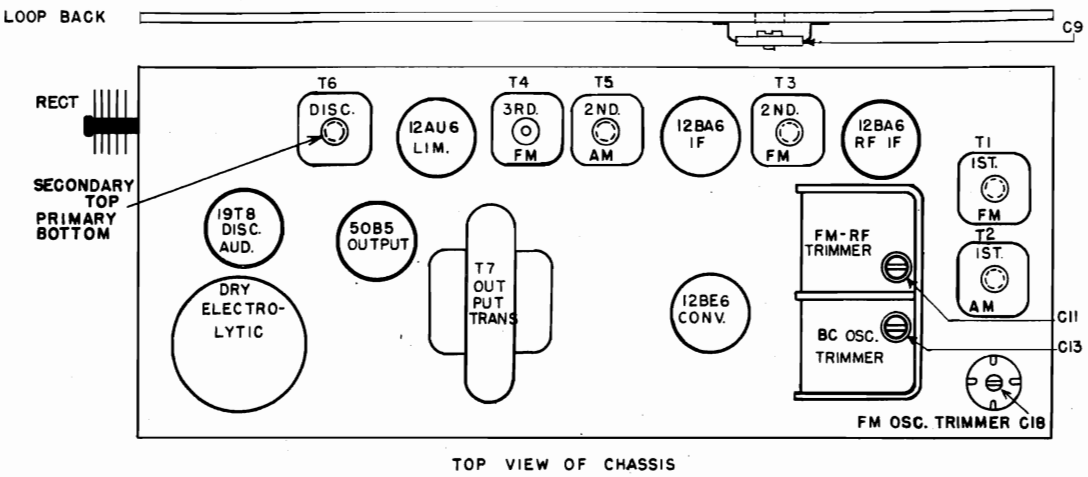

Fig. 1. Tube and Trimmer Location

3. Connect a standard output meter across the speaker voice coil. Turn volume control full on. Keep signal generator output low so that output meter indicates not more than ½ watt during alignment.

4. Align the AM oscillator trimmer (C13) and the AM r-f trimmer (C9) by coupling the signal to the loop antenna inductively. Connect a four-turn, six-inch diameter loop of bell wire across the signal generator output terminals, and locate the loop about one foot from the radio loop antenna. The position of the loop in respect to the radio loop antenna should not be changed during any one set of adjustments to prevent possible errors in the peak readings.

5. Disconnect the copper strap from the band switch to pin 7 of the 12BE6 to align the 1st FM i-f transformer. Unsolder the strap from the tube pin connection. Resolder the strap after T1 is aligned to 10.7 mc as in step 8.

6. The AM r-f alignment should be made before the FM r-f alignment. With the gang condenser fully closed, the pointer should point to the dot on the dial scale after the letters "FM" on the left end of the dial scale.

7. The termination impedance of the signal generator should be 300 ohms for FM r-f alignment.

METER ALIGNMENT CHART

Step	Signal Generator Frequency	Signal Input Point	Band Switch Setting	Dial Setting	Adjust	See Note
			AM I-F ALIGNMENT			
1	455 kc modulated with 400 cps	12BE6 grid (pin 7 of V2) thru .01 mfd.	AM	550 kc	Secondary and primary slugs of T5 for maximum.	3
2					Secondary and primary slugs of T2 for maximum.	
			FM DISCRIMINATOR AND I-F ALIGNMENT			
3	10.7 unmodulated	12BA6 grid (pin 1 of V3) thru 0.1 mfd.	FM	—	Adjust T6 secondary for zero. Apply 1 volt signal input.	1
4	See adjust col.				Detune signal generator to point of maximum meter reading.	
5	Same freq. as in step 4				Adjust T6 primary for maximum meter reading.	
6	10.7 mc unmodulated				Adjust slug of T4 for maximum.	2
7		12BA6 grid (pin 1 of V1) thru .01 mfd.			Adjust secondary and primary slugs of T3 for maximum.	
8		12BE6 grid (pin 7 of V2) thru .01 mfd. and 4700 ohms. See note 5.			Adjust secondary and primary slugs of T1 for maximum.	2, 5

©John F. Rider

Compliments of www.nucow.com

MODEL 218

METER ALIGNMENT CHART (Cont'd)

Step	Signal Generator Frequency	Signal Input Point	Band Switch Setting	Dial Setting	Adjust	See Note
			AM R-F ALIGNMENT			
9	1500 kc AM modulated with 400 cps	Inductively coupled. See note 4.	AM	1500 kc	Adjust C13 for maximum.	3, 4, 6.
10					Adjust C9 for maximum while rocking dial.	
			FM R-F ALIGNMENT			
11	108 mc unmodulated	Dipole terminals	FM	108 mc	Adjust C18 for maximum.	2, 6, 7.
12	98 mc unmodulated			For max. output	Adjust C11 for maximum while rocking dial.	

EQUIPMENT REQUIRED FOR VISUAL ALIGNMENT

1. General Electric YGS-3 sweep generator or equivalent.
2. General Electric ST-2A oscilloscope or equivalent.
3. 200,000 ohms, ½ watt, resistor.
4. .01 mfd. paper capacitor.
5. Isolation transformer.

NOTES FOR VISUAL ALIGNMENT

1. Connect the vertical plates of the scope across R11 in the grid circuit of V4 (steps 3, 4, 5, 11 and 12).

2. Connect the vertical plates of the scope between the junction of R18 and C29 and chassis (FM audio) (steps 6, 7, 8).

3. Connect the vertical plates of the scope between the junction of R14 and C27 and chassis (steps 1, 2, 9, 10).

4. In some cases tuning of the converter grid will cause "pulling in" of the oscillator and will change the oscillator frequency. If peaking C9 or C11 as in steps 10 or 12 causes the curve to move off the screen, it is necessary to recalibrate the oscillator as in steps 9 or 11.

5. The termination impedance of the signal generator should be 300 ohms to properly match the FM input impedance of this receiver (steps 11 and 12).

6. To align the 1st i-f transformer T1 (step 5), it is necessary to disconnect the copper strap from pin 7 of V2, the 12BE6. After alignment of T1, resolder the copper strap to pin 7 of the 12BE6.

7. To position the dial pointer, close the gang condenser. The pointer should be set to the dot on the dial scale after the letters FM on the left end of the dial scale.

8. For alignment of the AM oscillator and r-f trimmers (steps 9 and 10), the signal should be inductively coupled to the loop antenna by connecting a four-turn, six-inch diameter loop of bell to the signal generator terminals. Locate this loop about one foot from the radio loop antenna. To prevent possible errors in peak readings, the position of the loop with respect to the radio loop antenna should not be changed during any one set of adjustments.

VISUAL ALIGNMENT CHART

Step	Sweep Generator Frequency	Signal Input Point	Band Switch Setting	Dial Setting	Adjust	See Note
			AM I-F VISUAL ALIGNMENT			
1	455 KC ±20 KC at 60 cps sweep rate	12BE6 grid (pin 7 of V2) thru .01 mfd.	AM	—	Two slugs of T5 for maximum amplitude and minimum distortion of curve.	3
2					Two slugs of T2 for maximum amplitude and minimum distortion of curve.	
			FM I-F AND DISCRIMINATOR VISUAL ALIGNMENT			
3	10.7 MC ±300 KC at 60 cps sweep rate	12BA6 grid (pin 1 of V1) thru .01 mfd.	FM	—	Tuning slugs of T4 for maximum amplitude of curve, Fig. 2A.	1
4					Tuning slugs of T3 for maximum amplitude of curve. Fig. 2A.	
5		12BE6 grid (pin 1 of V2). See note 7.			Tuning slugs of T1 for maximum amplitude of curve. Fig. 2A.	1, 6
6		12BA6 grid (pin 1 of V3)			Primary of T6 for maximum amplitude of positive and negative peaks of output curve. Fig. 2B.	2
7					Secondary of T6 for vertical symmetry with respect to the mid-point horizontal trace. See Fig. 2B.	
8					Primary of T6 for straightest line between positive and negative peaks of output curve. See Fig. 2B.	

©John F. Rider

Compliments of www.nucow.com

VISUAL ALIGNMENT CHART (Cont.)

Step	Sweep Generator Frequency	Signal Input Point	Band Switch Setting	Dial Setting	Adjust	See Note
			AM R-F VISUAL ALIGNMENT			
9	1500 KC AM modulated with 60 cps	Inductively coupled. See note 8.	AM	1500 KC. See note.	C13 for steepest slope of straight-line trace on scope.	3, 4, 7, 8.
10	1500 KC ±20 KC at 60 cps sweep rate			For maximum amplitude of curve.	C9 for maximum amplitude and minimum distortion.	3, 4, 7, 8.
			FM R-F VISUAL ALIGNMENT			
11	108 MC AM modulated with 60 cps	Dipole terminals. See note 5.	FM	108 MC	C18 for steepest slope of straight-line trace on scope.	1, 4, 5, 7.
12	98 MC ±300 KC at 60 cps rate			For maximum output.	C11 for maximum amplitude and minimum distortion of curve.	1, 4, 5.

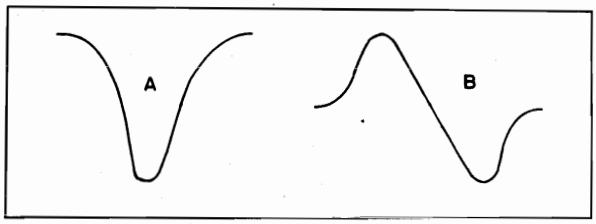

Fig. 2. I-F and Discriminator Curves

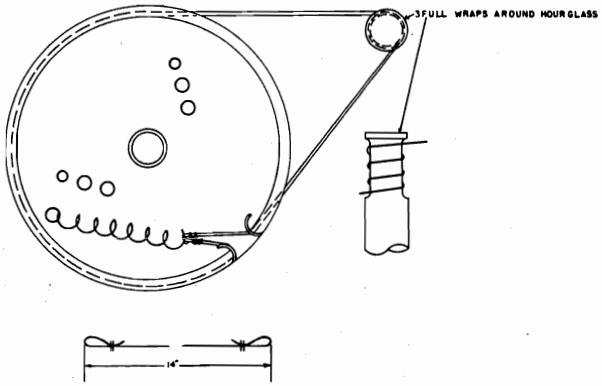

Fig. 3. Dial Stringing Diagram

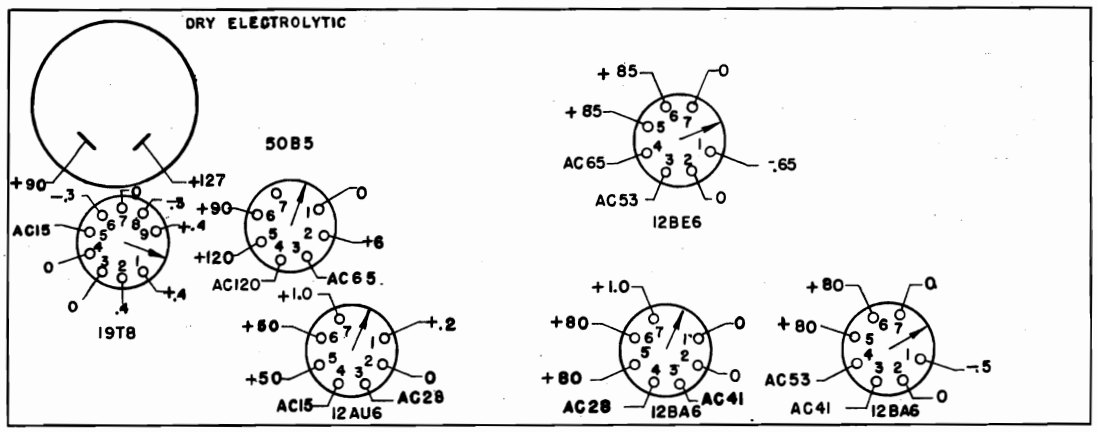

ALL VOLTAGES ARE + DC
UNLESS OTHERWISE SPECIFIED
ALL VOLTAGES TO CHASSIS
BAND SWITCH IN A.M POSITION
VOLUME MINIMUM

BACK OF CHASSIS
BOTTOM VIEW OF CHASSIS

VOLTAGES MEASURED WITH
D.C. VOLTAGES WITH 20,000 OHMS PER VOLT METER
A.C. VOLTAGES WITH 1,000 OHMS PER VOLT METER

Fig. 4. Socket Voltage Diagram

©John F. Rider

Compliments of www.nucow.com

MODEL 218

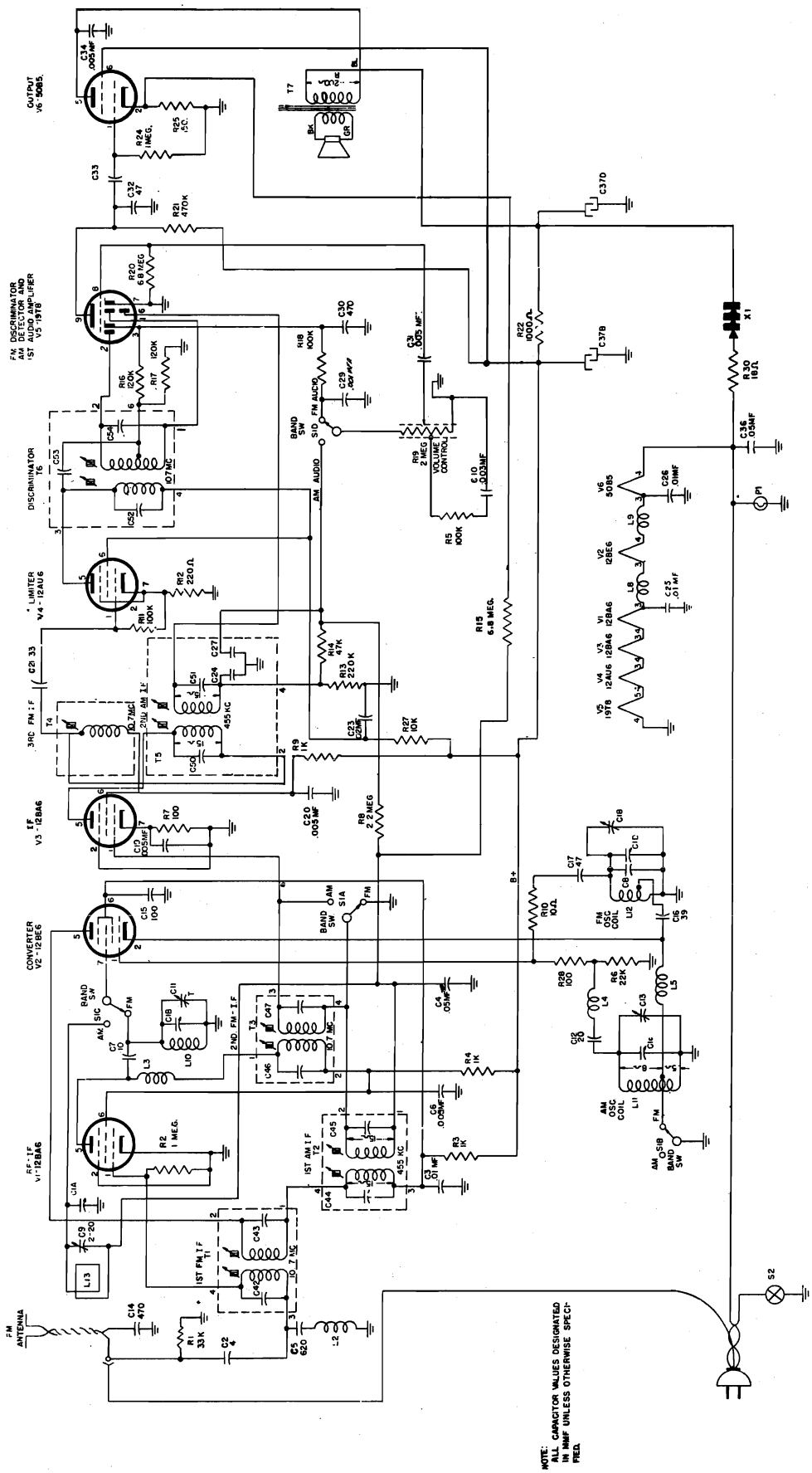

Fig. 5. Schematic diagram

©John F. Rider

Compliments of www.nucow.com

MODEL 218

MODEL 218
REPLACEMENT PARTS LIST

UNIVERSAL REPLACEMENT PARTS

Cat. No.	Symbol	Description	Cat. No.	Symbol	Description
UCC-037	C10	CAPACITOR—.003 mfd., 600 v., paper	URD-033	R12	RESISTOR—220 ohms, ½ w., carbon
UCC-039	C6, 19, 20, 31, 34	CAPACITOR—.005 mfd:, 600 v., paper	URD-049	R3, 4, 9	RESISTOR—1000 ohms, ½ w., carbon
UCC-040	C3, 23, 25, 26, 33	CAPACITOR—.01 mfd., 600 v., paper	URD-073	R27	RESISTOR—10,000 ohms, ½ w., carbon
UCC-045	C4, 36	CAPACITOR—.05 mfd., 600 v., paper	URD-081	R6	RESISTOR—22,000 ohms, ½ w., carbon
UCU-001	C2	CAPACITOR—4 mmf., 500 v., mica	URD-085	R1	RESISTOR—33,000 ohms, ½ w., carbon
UCU-020	C32	CAPACITOR—47 mmf., 500 v., mica	URD-089	R14	RESISTOR—47,000 ohms, ½ w., carbon
UCU-028	C15	CAPACITOR—100 mmf., 500 v., mica	URD-097	R5, 11, 18	RESISTOR—100,000 ohms, ½ w., carbon
UCU-044	C29, 30	CAPACITOR—470 mmf., 500 v., mica	URD-099	R16, 17	RESISTOR—120,000 ohms, ½ w., carbon
UCU-516	C21	CAPACITOR—33 mmf., 500 v., mica	URD-105	R13	RESISTOR—220,000 ohms, ½ w., carbon
UCU-2047	C5	CAPACITOR—620 mmf., 500 v., mica	URD-113	R21, 24	RESISTOR—470,000 ohms, ½ w., carbon
UOP-577		SPEAKER	URD-121	R2	RESISTOR—1 meg., ½ w., carbon
URD-001	R10	RESISTOR—10 ohms, ½ w., carbon	URD-129	R8	RESISTOR—2.2 meg., ½ w., carbon
URD-007	R30	RESISTOR—18 ohms, ½ w., carbon	URD-141	R15, 20	RESISTOR—6.8 meg., ½ w., carbon
URD-025	R7, 28	RESISTOR—100 ohms, ½ w., carbon	URE-029	R25	RESISTOR—150 ohms, 1 w., carbon
			URF-049	R22	RESISTOR—1000 ohms, 2 w., carbon

SPECIALIZED REPLACEMENT PARTS

RAB-104	L13	LOOP AND BACK ASSEMBLY	*RJS-118		SOCKET—9 prong tube socket for V5
RAU-309		CABINET—Brown	*RJS-125		SOCKET—7 prong tube socket for V1, V2, V3, V4, V6
RCE-101	C37A, 37B	CAPACITOR—80 mfd.–40 mfd., 150 v., electrolytic	RJX-033		SOCKET ASSEMBLY—For pilot light
RCT-038	C1A, 1B, 1C, 1D, C11, 13	CAPACITOR—Tuning capacitor	RJX-034		INTERLOCK ASSEMBLY—Female
*RCW-176	C14	CAPACITOR—470 mmf., Hi-K	*RLB-029	L10	COIL—FM r-f choke coil
*RCW-1043	C17	CAPACITOR—47 mmf.	RLC-092	L11	COIL—B-C oscillator coil
*RCW-1057	C16	CAPACITOR—39 mmf.	RLC-093	L12	COIL—FM oscillator coil
*RCW-1060	C7	CAPACITOR—10 mmf.	*RLI-085	L4, 8, 9	COIL—2 mmh. choke
*RCW-1070	C12	CAPACITOR—20 mmf., ceramic	RLI-087	L3, 5	COIL—.5 mmh. choke
*RCW-1075	C8	CAPACITOR—4 mmf., ceramic	RLI-088	L2	COIL—FM antenna choke
RCY-055	C18	CAPACITOR—Trimmer	*RMS-035		SPRING—Dial cord tension
RCY-056	C9	CAPACITOR—2-20 mmf., trimmer	RUM-054		SHAFT—Tuning
*RDC-032		CORD—Dial cord	RRC-111	R19, S2	VOLUME CONTROL
RDK-177		KNOB AND BEZEL ASSEMBLY	*RSI-003		INTERLOCK ASSEMBLY—Male
*RDP-048		POINTER	*RSW-072	S1	BAND SWITCH
RDS-086		PLATE—Dial scale back plate	*RTD-006	T6	TRANSFORMER—Discriminator
RDW-029		WINDOW—For dial scale	RTL-097	T2	TRANSFORMER—1st BC i-f
*RER-001	X1	RECTIFIER—Selenium rectifier	RTL-098	T5	TRANSFORMER—2nd BC i-f
*RHF-006		CHASSIS FOOT	RTL-099	T1, 3	TRANSFORMER—1st and 2nd FM i-f
*RHH-002		STUD—Tri-mount			
RHH-004		SNAP FASTENER			
RII-028		INSULATOR—Pointer insulator	RTL-100	T4	TRANSFORMER—3rd FM i-f
RIX-001		BRACKET—Tuning shaft bracket and insulating strip	*RTO-039	T7	TRANSFORMER—Output
			RWL-022		POWER CORD—3 wire

*USED ON PREVIOUS RECEIVERS

©John F. Rider

Compliments of www.nucow.com

MODEL 218,
"H" Version

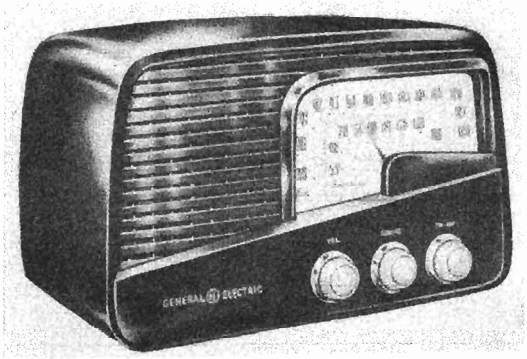

MODEL 218 "H" VERSION

CAUTION

ALWAYS USE AN ISOLATION TRANSFORMER IN THE RECEIVER POWER LINE, WHEN SERVICING OR ALIGNING THIS RECEIVER, TO PROTECT TEST EQUIPMENT.

SPECIFICATIONS

CABINET

Material	plastic
Color	mahogany
Height	8⅜ inches
Width	13⅝ inches
Depth	6⅞ inches

ELECTRICAL

Voltage	105-125 v. AC or DC
Frequency on AC	50 to 60 cps
Wattage	33 watts

TUNING RANGE

AM	540-1620 kc
FM	88-108 mc

INTERMEDIATE FREQUENCIES

AM	455 kc
FM	10.7 mc

POWER OUTPUT (120 VOLTS LINE)

Undistorted	1.1 watts
Maximum	1.8 watts

LOUDSPEAKER

Type	permanent magnet
Cone Diameter	5¼ inches
Voice Coil Impedance at 400 cps	3.2 ohms

TUBE COMPLEMENT

(V1) FM R-F and 1st I-F Amplifier	12BA6
(V2) Oscillator and Converter	12BE6
(V3) I-F Amplifier	12BA6
(V4) Limiter	12AU6
(V5) FM Discriminator, AM Detector and Audio Amplifier	19T8
(V6) Power Output	50B5

ANTENNA

AM	loop antenna
FM	power line antenna or 300-ohm FM antenna

GENERAL

Model 218 "H" version is a table model receiver providing reception on the AM and FM bands. It is housed in a mahogany colored plastic cabinet.

It is the same as the Model 218 except that the local oscillator is designed to operate on the high side of the incoming signal on FM reception. This change reduces the possibility of local oscillator radiation interfering with television reception.

The receiver has a built-in FM power line antenna; to operate from this antenna it is necessary to connect the brown wire coming out of the cabinet back to the right-hand screw of the antenna terminal strip.

On AM operation, the AM r-f signal is fed directly into the grid of the converter V2 through the 1st AM i-f transformer T2 into the grid of V3. From V3 the signal is fed to the second AM i-f transformer T5 and is detected by a diode section of V5 which is pin 6. The secondary of T1 which is in series with the primary of T2 offers a low impedance to the AM i-f frequency.

V1 (12BA6) in the FM reflex circuit acts both as an r-f and an i-f amplifier. The r-f signal is put into the grid (pin 1) of V1 through the secondary of T1. It is amplified by V1 and put into the grid of V2 the converter through capacitor C7. Choke L3 prevents the r-f signal from getting into the second FM i-f transformer T3. The 10.7 mc FM i-f is fed from the plate of V2 to the primary of T1 the 1st FM i-f transformer which now puts the FM i-f signal onto the grid of V1. From the plate of V1 the FM i-f signal is fed through choke L3 to the primary of T3 through to the grid of V3. The plate of V3 feeds the FM i-f signal through C50 in the primary of T5 to the 3rd FM i-f tuning coil T4 and through C21 to the grid of the limiter grid pin 1 of V4. The FM i-f signal is detected in T6 discriminator transformer and two diode sections of V5, pins 1 and 2.

ALIGNMENT

For the Model 218 receivers "H" version, the alignment remains the same as that outlined for Model 218 in service notes ER-S-218. However, the calibration will change in the "H" version receiver which necessitates the use of a new back plate, Stock No. RDS-093.

REPLACEMENT PARTS

All parts for the Model 218 "H" version are identical to those listed in Service Notes ER-S-218 except for those parts listed below.

Cat. No.	Symbol	Description
*URD-069	R31	RESISTOR—6800 ohms, ½ w.
*RCW-1077	C61	CAPACITOR—22 mmf., ceramic
*RCW-2027	C60	CAPACITOR—15 mmf., ceramic
RDS-093		DIAL SCALE—Model 218 "H" back plate dial scale
RLC-102	L14	COIL—FM oscillator coil
RTD-010	T8	TRANSFORMER—Discriminator IF transformer
URD-077	R32	RESISTOR—15,000 ohms, ½ w.

©John F. Rider

Compliments of www.nucow.com

MODEL 218,
"H" Version

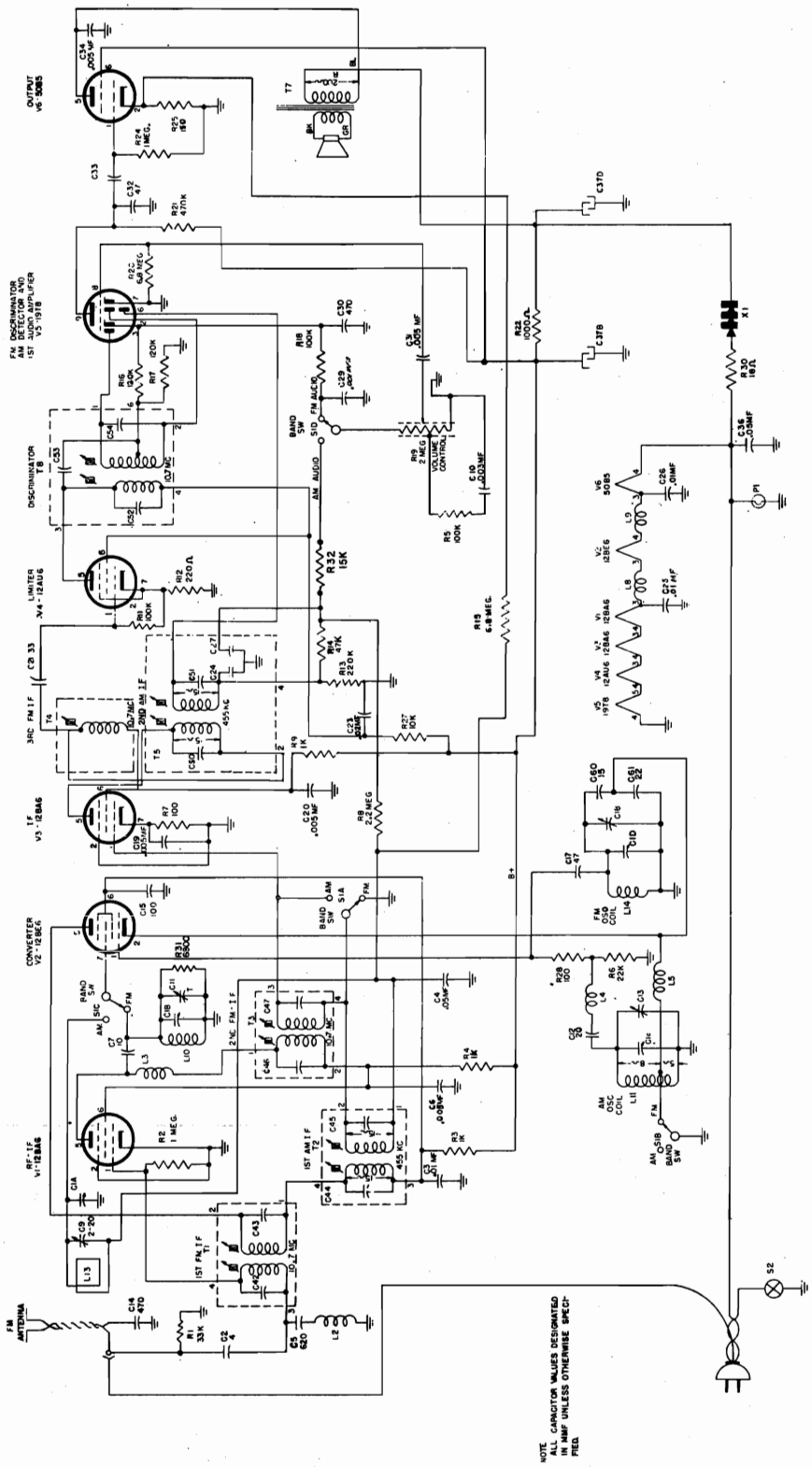

Fig. 1. Schematic Diagram, Model 218 "H" Version

©John F. Rider

Compliments of www.nucow.com

MODELS 400, 401, 411

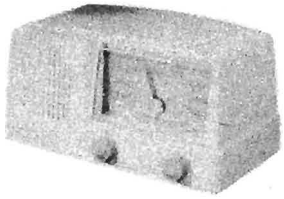

MODEL 401

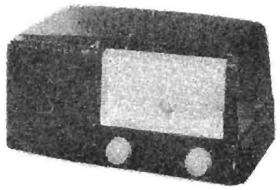

MODELS 400, 411

SPECIFICATIONS

CABINET	Model	400	411	401
	Material	Brown	Maroon	Ivory
	Height	6⅛ in.		
	Width	12½ in.		
	Depth	7¼ in.		
ELECTRICAL RATING	Voltage	105–125		
	Frequency	50–60 cycles or DC		
	Wattage	26 watts at 117 volts input		
OPERATING FREQUENCIES	Standard Broadcast	540–1600 kc		
	I-F Amplifier	455 kc		
POWER OUTPUT	Undistorted	1 watt		
	Maximum	1.75 watts		
LOUDSPEAKER	Type	Alnico V PM		
	Outside Cone Diameter	4 inches		
	Voice Coil Impedance at 400 Cycles	3.2 ohms		
TUBE COMPLEMENT	(V1) Oscillator-Converter	12SA7		
	(V2) I-F Amplifier	12BA6		
	(V3) Detector-Audio	12SQ7		
	(V4) Rectifier	35W4		
	(V5) Audio Power Amplifier	50C5		
	(I1) Pilot Lamp	G-E Mazda No. 47		

GENERAL INFORMATION

The Models 400, 401 and 411 are five-tube a-c or d-c superheterodyne AM standard broadcast receivers equipped with an efficient built-in antenna loop and incorporating automatic volume control, a permanent magnet speaker, and beam power output.

ELECTRICAL CIRCUIT ALIGNMENT

EQUIPMENT REQUIRED

1. Test oscillator, tone amplitude-modulated.
2. A-C output meter, 1½ volts full scale.
3. .05 mfd., paper capacitor.
4. Insulated screwdriver.
5. Coupling loop for test oscillator (see text).
6. Isolation power transformer.

ALIGNMENT PROCEDURE

The alignment steps are given in the table form of the Alignment Chart. Adjustment trimmers are shown in the illustration of Fig. 2.

1. The chassis is removed from the cabinet with the antenna loop and back attached and the speaker leads reconnected.
2. An isolation transformer should be used for the receiver power source when aligning or servicing, AC-DC receivers, to prevent short circuiting of equipment and shock hazard.
3. The output meter is connected across the terminals of the loudspeaker voice coil.
4. The receiver volume control should be turned to maximum and test oscillator signal output attenuated during alignment to develop not more than 1¼ volts output meter reading at the loudspeaker.
5. For i-f alignment, the high side of the signal generator output cable should be connected through a .05 mfd. paper capacitor to the points indicated in the Alignment Chart. The low side of the output cable is connected to the receiver chassis.
6. To align the oscillator and r-f trimmers, the signal generator output is inductively coupled to the radio loop, L1, by connecting a four-turn, six-inch diameter loop of bell wire across its output terminals and then locating the loop about one foot from the radio loop antenna. To prevent possbile errors in comparative peak readings, the position of signal generator loop with respect to the radio loop antenna should not be changed during measurement.

ALIGNMENT CHART

Step	Connect Test Oscillator to:	Test Osc. Setting	Radio Dial Setting	Adjust Trimmers For Maximum
	I-F ALIGNMENT			
1	V2, 12BA6 grid (Pin 1), in series with .05 mfd.	455 KC	.....	C9 and C8 of second i-f transformer, T3
2	V1, 12SA7 grid (Pin 8), in series with .05 mfd.	455 KC	.....	C6 and C5 of first i-f transformer, T2
3	V1, 12SA7 grid (Pin 8), in series with .05 mfd.	455 KC	.....	Recheck adjustment of C9, C8, C6, C5, for maximum
	R-F ALIGNMENT			
4	Inductively coupled to radio loop	1620 KC	Minimum capacity C2A, C2B	C3, oscillator trimmer
5	Inductively coupled to radio loop	1500 KC	1500 KC	C1, r-f trimmer

STAGE GAINS AND VOLTAGE CHECKS

Stage gain measurements by vacuum tube voltmeter or similar measuring device may be used to check circuit performance and isolate trouble. The gain values listed may have tolerances of 20 per cent. Readings are taken with low signal input so that AVC is not effective.

1. I-F GAIN

12SA7 Grid to 12BA6 Grid ..... 50 @ 455 KC
12BA6 Grid to 12SQ7 Diode Plate ..... 50 @ 455 KC

2. AUDIO GAIN

Input of 0.15 volts at 400 cycles across volume control (R4) with control set at maximum will develop approximately ½ watt output across the speaker voice coil terminals.

3. OSCILLATOR GRID BIAS

D-C voltage developed across the oscillator grid leak (R1) averages 8.5 volts at 1000 kc.

4. TUBE SOCKET PIN VOLTAGES

Fig. 3 shows voltages from tube pins to B−. Voltage readings differing greatly from those specified may help localize defective components.

©John F. Rider

Compliments of www.nucow.com

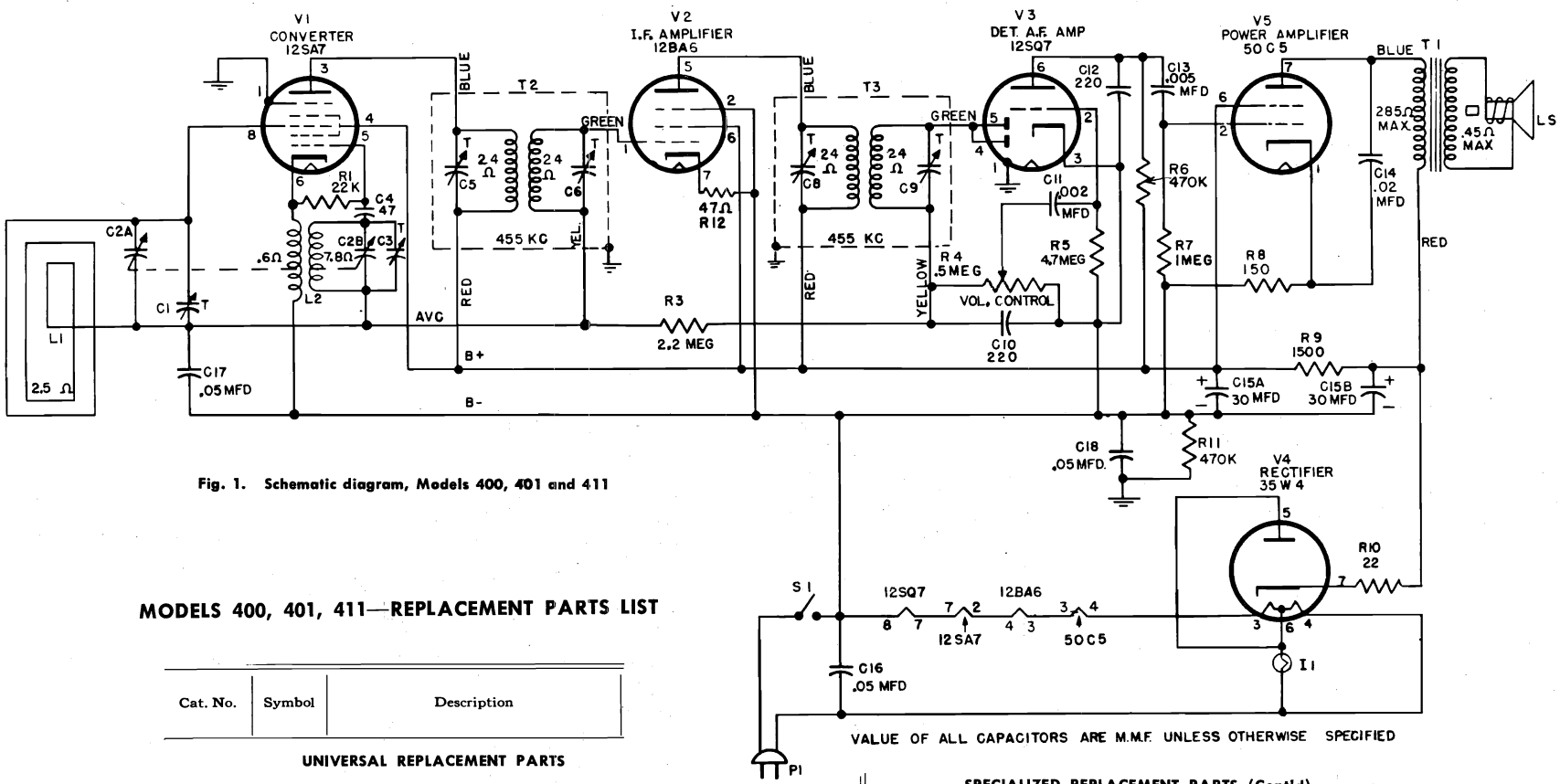

Fig. 1. Schematic diagram, Models 400, 401 and 411

MODELS 400, 401, 411—REPLACEMENT PARTS LIST

Cat. No.	Symbol	Description
		UNIVERSAL REPLACEMENT PARTS
*UCC-041	C14	CAPACITOR—.02 mfd., 600 v., paper
*UCC-045	C16, C17, C18	CAPACITOR—.05 mfd., 600 v., paper
*UCC-020	C4	CAPACITOR—47 mmf., 600 v., mica
*URD-009	R10	RESISTOR—22 ohms, ½ w., carbon
*URD-017	R12	RESISTOR—47 ohms, ½ w., carbon
*URD-029	R8	RESISTOR—150 ohms, ½ w., carbon
*URD-081	R1	RESISTOR—22K ohms, ½ w., carbon
*URD-113	R6, R11	RESISTOR—470K ohms, ½ w., carbon
*URD-121	R7	RESISTOR—1 meg., ½ w., carbon
*URD-129	R3	RESISTOR—2.2 meg., ½ w., carbon
*URD-137	R5	RESISTOR—4.7 meg., ½ w., carbon
*URF-053	R9	RESISTOR—1500 ohms, 2 w., carbon
*S403D	LS1	SPEAKER, PM SPEAKER—4 inch
		SPECIALIZED REPLACEMENT PARTS
*RAB-095	L1	LOOP BACK
*RAU-306		CABINET (400) (Brown)
*RAU-307		CABINET (401) (Ivory)
*RAU-321		CABINET (411) (Maroon)
*RCE-046	C15A, C16B	ELECTROLYTIC CAPACITOR—30-30 mfd., 150 v.
RCT-042	C1, C2A, C2B, C3	TUNING CAPACITOR

* Used on previous models.

		SPECIALIZED REPLACEMENT PARTS (Cont'd)
*RCW-3013	C10, 11, 12, 13	CAPACITOR—BULL PLATE, .002 mf., 220 mmf., 220, mmf., and .005 mfd.
*RDC-032		DIAL CORD—25 yards
*RDK-174		KNOB (400) (Wheat)
*RDK-175		KNOB (401, 411) (Maroon)
RDP-052		POINTER—Dial pointer
RDS-095		BACK PLATE AND DIAL SCALE
RDW-021		WINDOW—Dial window
*RHC-017		CLIP—Oscillator mounting
*RHG-018		GROMMET (For mounting tuning capacitor)
*RHH-002		TRIMONT STUD (For mounting dial glass)
*RHJ-007		SPACER (For mounting tuning capacitor)
*RJS-003		TUBE SOCKET—For V1 and V3
*RJS-092		TUBE SOCKET—For V4
*RJS-141		TUBE SOCKET—For V2
*RJX-031		PILOT LIGHT SOCKET ASSEMBLY
*RLC-090	L2	OCILLATOR COIL
*RMS-118		SPRING—Drum spring
RMX-170		DRIVE SHAFT BUSHING ASSEMBLY
*RRC-106	R4, S1	VOLUME CONTROL AND SWITCH
*RTL-094	T2	1st I.F. TRANSFORMER
*RTO-095	T3	2nd I.F. TRANSFORMER
*RTO-069	T1	OUTPUT TRANSFORMER
*RWL-009		POWER CORD

© John F. Rider

Compliments of www.nucow.com

MODELS 400,
401, 411

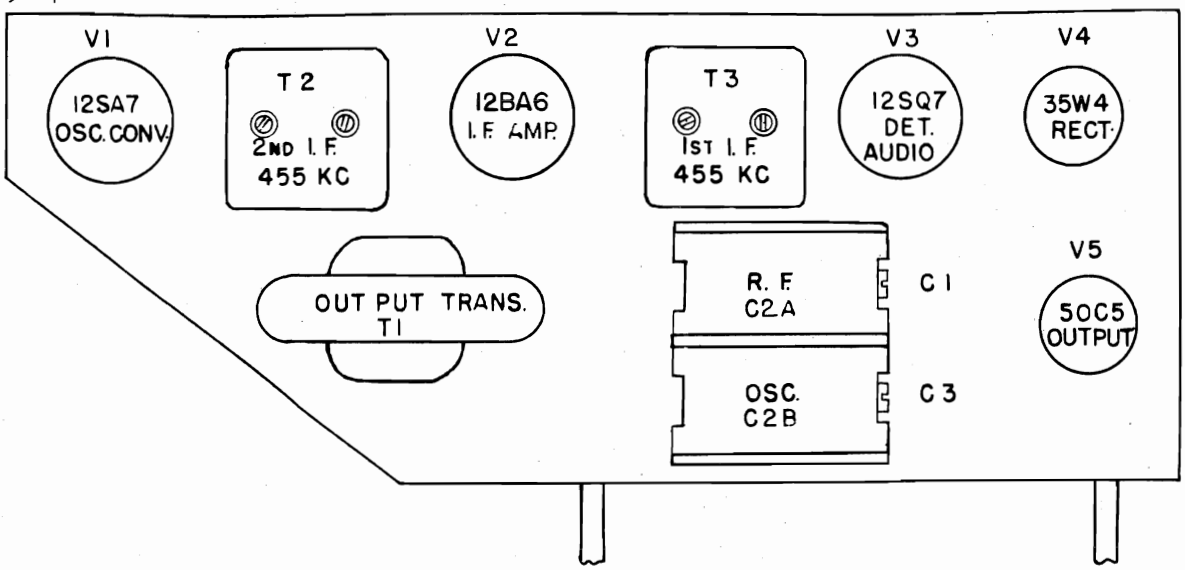

Fig. 2. Tube and Trimmer Location

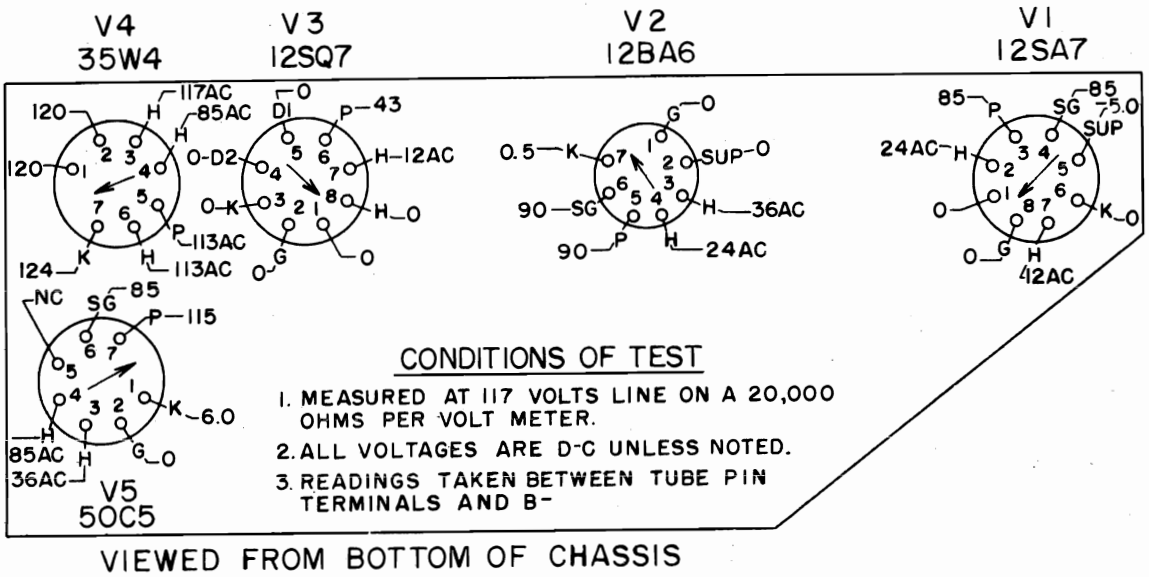

Fig. 3. Socket Voltages

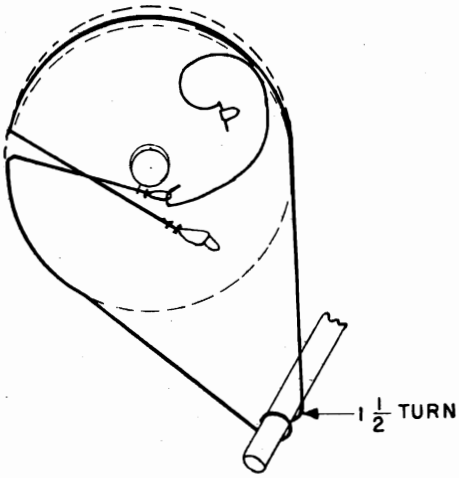

Fig. 4. Dial Stringing Diagram

©John F. Rider

Compliments of www.nucow.com

MODEL 402

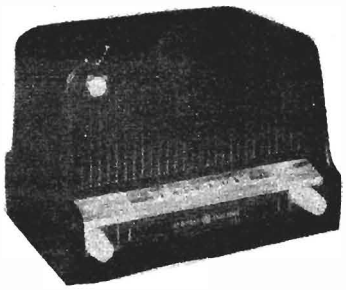

SPECIFICATIONS

CABINET	Material . . . . . Plastic (brown) Height . . . . . $8\frac{5}{8}$ in. Width . . . . . $13\frac{1}{16}$ in. Depth . . . . . 8 in.
ELECTRICAL RATING	Voltage . . . . . 105–125 Frequency . . . . . 50–60 cycles or DC Wattage . . . . . 25 at 117 volts input
OPERATING FREQUENCIES	Standard Broadcast . . . . . 540–1600 kc I-F Amplifier . . . . . 455 kc
POWER OUTPUT	Undistorted . . . . . 1 watt Maximum . . . . . 1.75 watts
LOUDSPEAKER	Type . . . . . Alnico V PM Outside Cone Diameter . . . . . $5\frac{1}{2}$ inches Voice Coil Impedance at 400 Cycles . 3.2 ohms
TUBE COMPLEMENT	(V1) Oscillator-Converter . . . . . 12SA7 (V2) I-F Amplifier . . . . . 12BA6 (V3) Detector-Audio . . . . . 12SQ7 (V4) Rectifier . . . . . 35Z5GT (V5) Audio Power Amplifier . . . . . 50L6GT (I1) Pilot Lamp . . . . . G-E Mazda No. 47

GENERAL INFORMATION

The Model 402 is a four-tube (plus rectifier tube) a-c or d-c superheterodyne AM standard broadcast receiver equipped with an efficient built-in antenna loop and incorporating automatic volume control, an oversize permanent magnet speaker, and beam power output.

ELECTRICAL CIRCUIT ALIGNMENT

EQUIPMENT REQUIRED

1. Test oscillator, tone amplitude-modulated.
2. A-C output meter, $1\frac{1}{2}$ volts full scale.
3. .05 mfd., paper capacitor.
4. Insulated screwdriver.
5. Coupling loop for test oscillator (see text).
6. Isolation power transformer.

ALIGNMENT PROCEDURE

The alignment steps are given in the table form of the Alignment Chart. Adjustment trimmers are shown in the illustration of Fig. 3.

1. The chassis is removed from the cabinet with the antenna loop and back attached and the speaker leads reconnected.
2. An isolation transformer should be used for the receiver power source when aligning or servicing AC-DC receivers, to prevent short circuiting of equipment and shock hazard.
3. The output meter is connected across the terminals of the loudspeaker voice coil.
4. The receiver volume control should be turned to maximum and test oscillator signal output attenuated during alignment to develop not more than $1\frac{1}{4}$ volts output meter reading at the loudspeaker.
5. For i-f alignment, the high side of the signal generator output cable should be connected through a .05 mfd. paper capacitor to the points indicated in the Alignment Chart. The low side of the output cable is connected to the receiver chassis.
6. To align the oscillator and r-f trimmers, the signal generator output is inductively coupled to the radio loop, L1, by connecting a four-turn, six-inch diameter loop of bell wire across its output terminals and then locating the loop about one foot from the radio loop antenna. To prevent possible errors in comparative peak readings, the position of signal generator loop with respect to the radio loop antenna should not be changed during measurement.

ALIGNMENT CHART

Step	Connect Test Oscillator to:	Test Osc. Setting	Radio Dial Setting	Adjust Trimmers For Maximum
	I-F ALIGNMENT			
1	V2, 12BA6 grid (Pin 1), in series with .05 mfd.	455 KC	. . . . .	C9 and C8 of second i-f transformer, T3
2	V1, 12SA7 grid (Pin 8), in series with .05 mfd.	455 KC	. . . . .	C6 and C5 of first i-f transformer, T2
3	V1, 12SA7 grid (Pin 8), in series with .05 mfd.	455 KC	. . . . .	Recheck adjustment of C9, C8, C6, C5, for maximum
	R-F ALIGNMENT			
4	Inductively coupled to radio loop	1620 KC	Minimum capacity C2A, C2B	C3, oscillator trimmer
5	Inductively coupled to radio loop	1500 KC	1500 KC	C1, r-f trimmer

STAGE GAINS AND VOLTAGE CHECKS

Stage gain measurements by vacuum tube voltmeter or similar measuring device may be used to check circuit performance and isolate trouble. The gain values listed may have tolerances of 20 per cent. Readings are taken with low signal input so that AVC is not effective.

1. I-F GAIN

12SA7 Grid to 12BA6 Grid . . . . . 50 @ 455 KC
12BA6 Grid to 12SQ7 Diode Plate . . . . . 50 @ 455 KC

2. AUDIO GAIN

Input of 0.15 volts at 400 cycles across volume control (R4) with control set at maximum will develop approximately $\frac{1}{2}$ watt output across the speaker voice coil terminals.

3. OSCILLATOR GRID BIAS

DC voltage developed across the oscillator grid leak (R1) averages 8.5 volts at 1000 kc.

4. TUBE SOCKET PIN VOLTAGES

Fig. 5 shows voltages from tube pins to B−. Voltage readings differing greatly from those specified may help localize defective components.

©John F. Rider

Compliments of www.nucow.com

MODEL 402

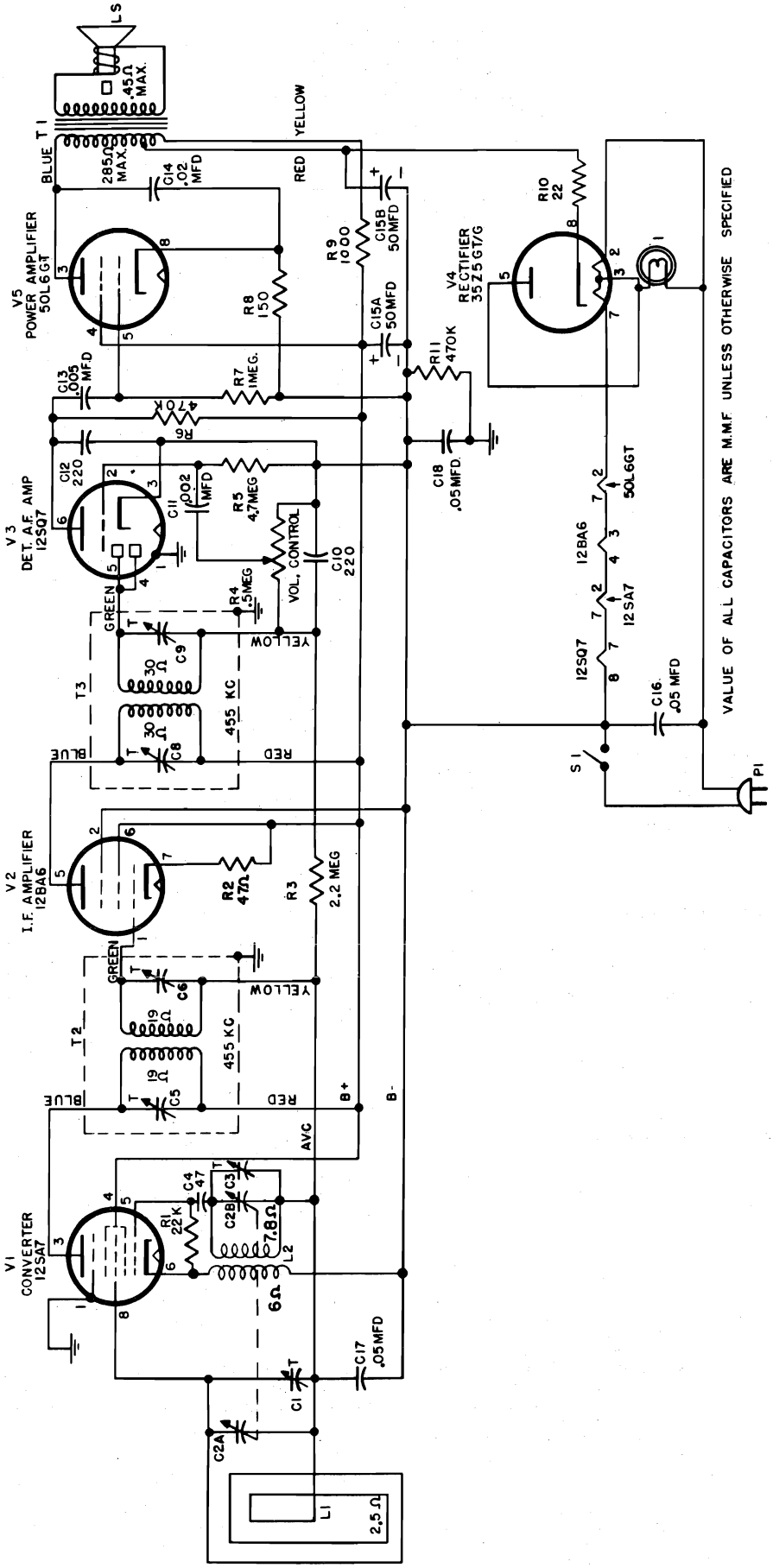

Fig. 1. Schematic Diagram, Model 402

©John F. Rider

Compliments of www.nucow.com

MODEL 402

CAPACITORS C10, 11, 12, AND C13

UNIT K67J836

Some production receivers use a four-section ceramic unit incorporating capacitors C10, 11, 12 and C13. The ceramic unit, RCW-3013, is illustrated in Fig. 2 for lead identification to capacitor sections and chassis circuit wiring. Other receivers may be found to have individual component capacitors in place of the four-section ceramic unit.

REPLACEMENT

If in a circuit analysis the ceramic unit is found to be defective; the entire unit may be replaced by the identical part RCW-3013 or, the defective section may be located and disconnected from the receiver circuit and the equivalent single components used in its place. The alternate capacitors are listed in the parts section as follows: UCC-036, C11, UCC-039, C13; and UCU-1036, C10 or C12.

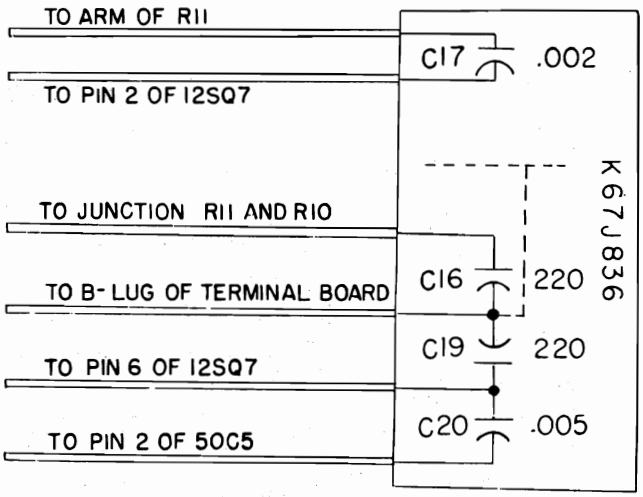

Fig. 2. Capacitor RCW-3013 (K67J836)

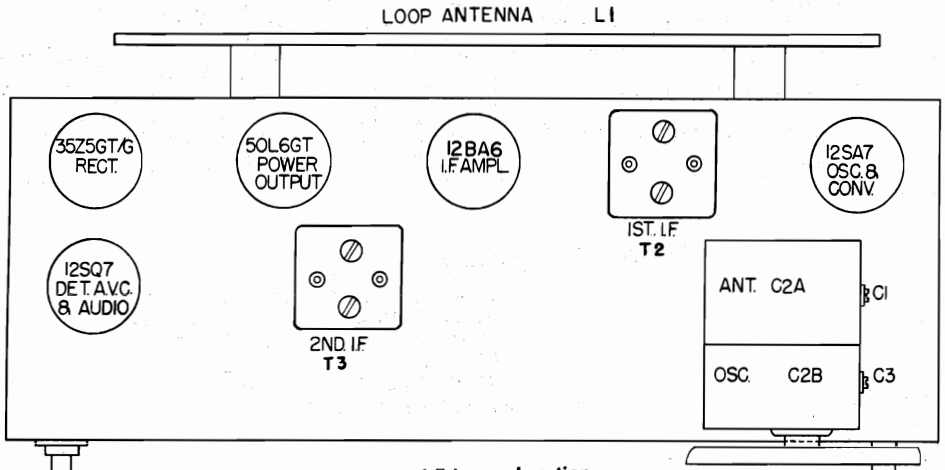

Fig. 3. Tube and Trimmer Location

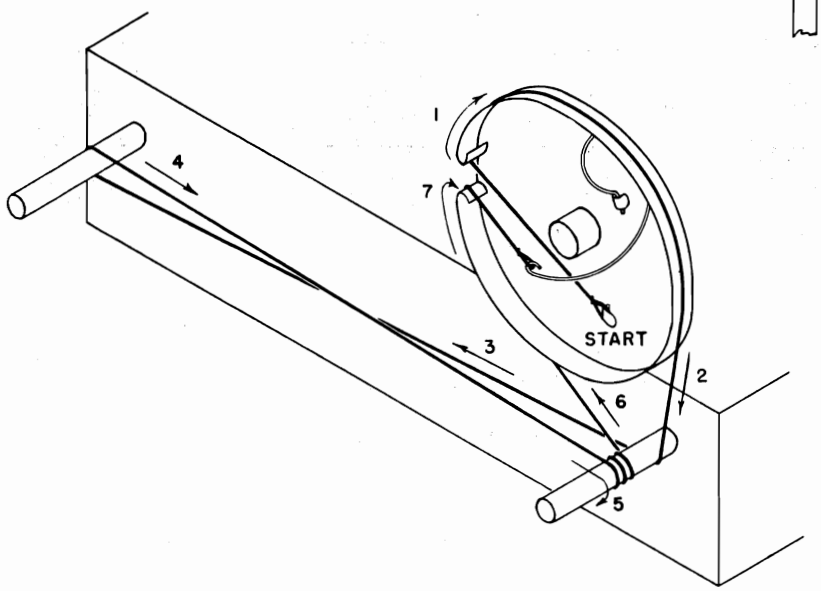

Fig. 4. Dial Stringing Diagram

©John F. Rider

Compliments of www.nucow.com

MODEL 402

MODEL 402 PRELIMINARY REPLACEMENT PARTS LIST

Cat. No.	Symbol	Description
		UNIVERSAL REPLACEMENT PARTS
*UCC-041	C14	CAPACITOR—.02 mf., 600 v., paper
UCC-036	C11	CAPACITOR—.002 mf., 600 v., paper (alternate replacement for C11 of RCW-3013)
UCC-039	C13	CAPACITOR—.005 mf., 600 v., paper (alternate replacement for C13 of RCW-3013)
*UCC-045	C16, C17, C18	CAPACITOR—.05 mf., 600 v., paper
*UCU-020	C4	CAPACITOR—47 mmf., 500 v., mica
UCU-1036	C10, C12	CAPACITOR—220 mmf, mica (alternate replacement for C10 or C12 of RCW-3013)
*URD-009	R10	RESISTOR—22 ohms, ½ w., carbon
URD-017	R2	RESISTOR—47 ohms, ½ w., carbon
*URD-029	R8	RESISTOR—150 ohms, ½ w., carbon
*URD-081	R1	RESISTOR—22,000 ohms, ½ w., carbon
*URD-113	R6, R11	RESISTOR—470,000 ohms, ½ w., carbon
*URD-121	R7	RESISTOR—1 megohm, ½ w., carbon
*URD-129	R3	RESISTOR—2.2 megohms, ½ w., carbon
*URD-137	R5	RESISTOR—4.7 megohms, ½ w., carbon
*URF-049	R9	RESISTOR—1000 ohms, 2 w., carbon
		SPECIALIZED REPLACEMENT PARTS
*RAB-108	L1	CABINET BACK AND LOOP ASSEMBLY
*RAU-311		CABINET—(brown)

Cat. No.	Symbol	Description
		SPECIALIZED REPLACEMENT PARTS (CONT'D)
*RCE-050	C15A, B	CAPACITOR—Electrolytic—50 mf., 150 v., 50 mf., 150 v.
*RCT-036	C2A, B	CAPACITOR—Tuning
*RCW-3013	C10, 11, 12, 13	CAPACITOR—.220 mmf., .002 mf., 220 mmf., .005 mf. respectively (Bull Plate)
*RDC-032		DIAL CORD—Quantity, 25 yds.
*RDK-181		KNOB—Volume or tuning control
*RDP-049		POINTER—Dial scale pointer
RDS-096		DIAL SCALE
*RHC-017		CLIP—Osc. coil clip for L2
*RHC-024		CLIP—(capacitor mounting) 1 in.
*RHG-018		GROMMET (Tuning Gang mounting)
*RHH-004		SNAP FASTENER (For Loop Back)
*RHJ-007		SPACER (Tuning Gang Mounting)
*RHM-039		CLIP—(Pilot light) ½ in.
*RHM-046		MOUNTING CLIP (Dial scale)
*RJC-004		CLIP (Antenna loop connecting clip)
*RJS-003		TUBE SOCKET—For V1, 3, 4 and 5
*RJS-141		TUBE SOCKET—For V2
*RJS-096		PILOT LIGHT SOCKET
*RLC-090	L2	OSCILLATOR COIL
*RMS-118		DRUM SPRING (Dial cord spring)
*RMX-149		TUNING SHAFT AND BUSHING ASSEMBLY
*RRC-077	R4, S1	VOLUME CONTROL AND SWITCH
*RTL-092	T2	1st I.F. TRANSFORMER
*RTL-093	T3	2nd I.F. TRANSFORMER
*RTO-078	T1	OUTPUT TRANSFORMER
*RWL-009		POWER CORD
S527D		SPEAKER—5½ in.

*Used on previous Models.

FRONT OF CHASSIS

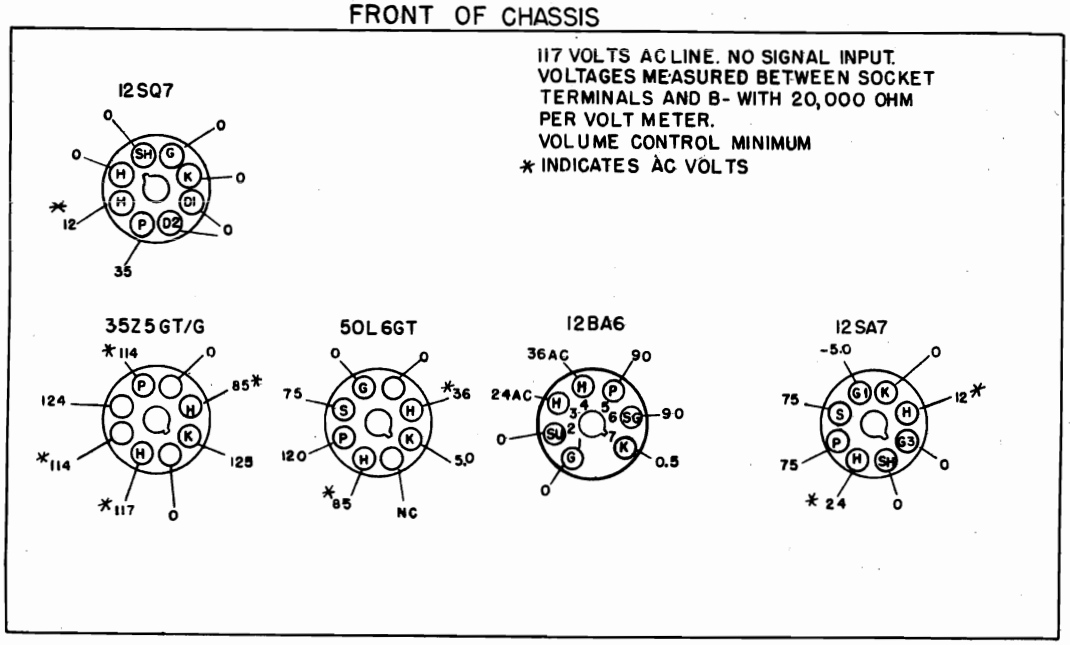

BOTTOM VIEW OF CHASSIS

Fig. 5. Socket Voltages

©John F. Rider

Compliments of www.nucow.com

MODELS 404, 405, 410

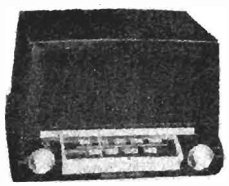

MODEL 404

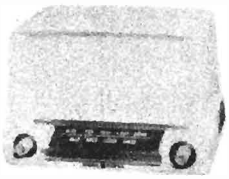

MODEL 405

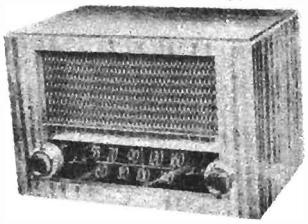

MODEL 410

SPECIFICATIONS

	Model	404	405	410
CABINET:	Composition	Brown, plastic	Ivory, plastic	Wood, mah.
	Height	8¾ in.		9⅛ in.
	Width	7¼ in.		7 in.
	Length	13 in.		13¼ in.

POWER SUPPLY:	Voltage ..... 105–120 volts Frequency ..... 50–60 cycles or DC Voltage ..... 30 watts
OPERATING FREQUENCIES:	Broadcast Band ..... 540–1600 KC IF Amplifier ..... 455 KC
POWER OUTPUT:	Undistorted ..... 1 watt Maximum ..... 1.75 watts
LOUDSPEAKER:	Type ..... Alnico 5 PM Outside Cone Diameter ..... 5¼ inches Voice coil impedance at 400 cycles .. 3.2 ohms

TUBE COMPLEMENT:

Symbol	Purpose	Type
V1	RF Amplifier	12SK7
V2	Oscillator Converter	12SA7
V3	IF Amplifier	12BA6
V4	Detector-Audio Amplifier	12SQ7
V5	Rectifier	35Z5
V6	Audio Power Amplifier	35L6GT
I1	Pilot Lamp	GE Mazda No. 47

STAGE GAINS AND VOLTAGE CHECKS

Stage gain measurements by vacuum tube voltmeter or similar measuring device may be used to check circuit performance and isolate trouble. The gain values listed may have tolerances of ±20 per cent. Readings are taken with low signal input so that AVC is not effective.

1. I-F Gain

12SA7 Grid to 12BA6 Grid — 50 @ 455 KC
12BA6 Grid to 12SQ7 Diode Plate — 50 @ 455 KC

2. Audio Gain

Input of 0.15 volts at 400 cycles across volume control (R6) with control set at maximum will develop approximately ½ watt output across the speaker voice coil terminals.

3. Oscillator Grid Bias

D-C voltage developed across the oscillator grid leak (R4) averages 8.5 volts at 1000 kc.

4. Tube Socket Pin Voltages

Fig. 3 shows voltages from tube pins to B−. Voltage readings differing greatly from those specified may help localize defective components.

RCW-3036, Bull Plate K71J736

The lead connections for the three-section ceramic capacitor unit containing C11, C12 and C13 are identified from the illustration of Fig. 4.

Replacement

The three-section unit is cataloged RCW-3036 in the parts list for direct replacement. However, any single section may be replaced by one of the single unit capacitors cataloged for the respective capacitor symbol. These items are: UCC-037, C11; UCC-039, C13; and UCU-1036, C12.

ELECTRICAL CIRCUIT ALIGNMENT

Equipment required:

1. Test oscillator with tone modulation
2. AC voltmeter, 1½ volts full scale.
3. Paper capacitor, 0.05 mf.
4. Insulated screwdriver.
5. Coupling loop for test oscillator (see text).
6. Isolation transformer.

Alignment Procedure

The alignment steps are given in table form of the Alignment Chart. Adjustment trimmers are shown in the illustration of Fig. 5.

1. The chassis is removed from the cabinet with the antenna loop and back attached and the speaker leads reconnected.

2. An isolation transformer should be used for the receiver power source when aligning or servicing AC-DC receivers to prevent short circuiting of equipment and shock hazard.

3. The output meter is connected across the terminals of the loudspeaker voice coil.

4. The receiver volume control should be turned to maximum and test oscillator signal output attenuated during alignment to develop not more than 1¼ volts output meter reading at the loudspeaker.

5. For i-f alignment, the high side of the signal generator output cable should be connected through a .05 mfd. paper capacitor to the points indicated in the Alignment Chart. The low side of the output cable is connected to the receiver chassis.

6. To align the oscillator and r-f trimmers, the signal generator output is inductively coupled to the radio loop, L1, by connecting a four-turn, six-inch diameter loop of bell wire across its output terminals and then locating the loop about one foot from the radio loop antenna. To prevent possible errors in comparative peak readings, the position of signal generator loop with respect to the radio loop antenna should not be changed during measurement.

ALIGNMENT CHART

Step	Connect Test Oscillator to:	Test Osc. Setting	Radio Dial Setting	Adjust Trimmers for Maximum
I-F ALIGNMENT				
1	V3, 12BA6 grid (Pin 1), in series with 0.5 mfd.	455 KC	.....	C9 and C8 of second i-f transformer T3.
2	V2, 12SA7 grid (Pin 8), in series with .05 mfd.	455 KC	.....	C7 and C6 of first i-f transformer, T2
3		455 KC	.....	Recheck adjustment of C9, C8, C7, C6, for maximum
R-F ALIGNMENT				
4	Inductively coupled to radio loop.	1620 KC	Minimum capacity C1A, C1B	C3, oscillator trimmer
5	Inductively coupled to radio loop.	1500 KC	Tune for Maximum	C1, r-f trimmer C2, ant. trimmer

©John F. Rider

Compliments of www.nucow.com

MODELS 404,
405, 410

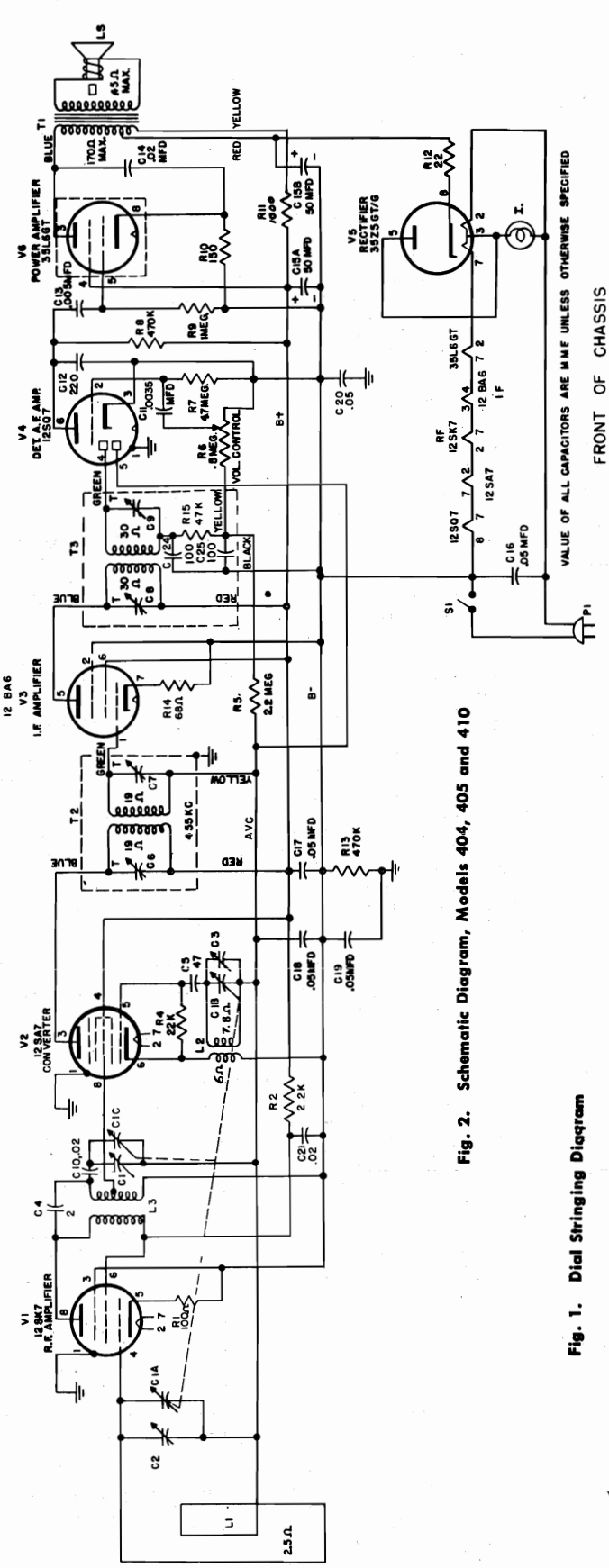

Fig. 2. Schematic Diagram, Models 404, 405 and 410

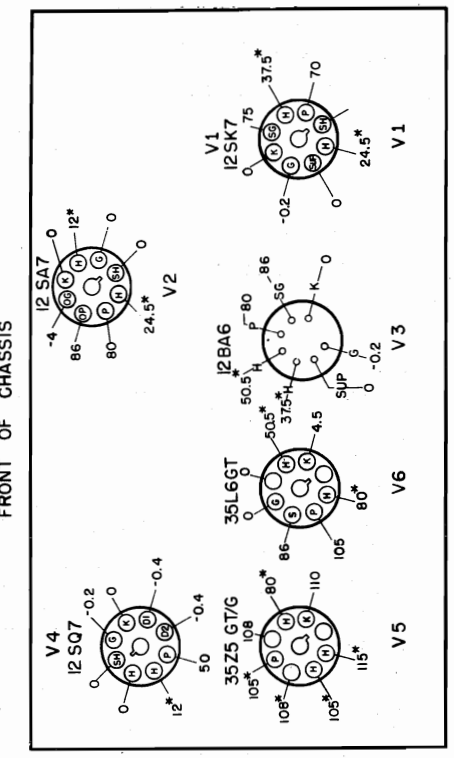

117 VOLTS AC LINE. NO SIGNAL INPUT.
VOLTAGES MEASURED BETWEEN
SOCKET TERMINALS AND B- WITH
20,000 OHMS PER VOLT METER.
VOLUME CONTROL MINIMUM
* INDICATES AC VOLTS.

Fig. 3. Socket Voltage Diagram

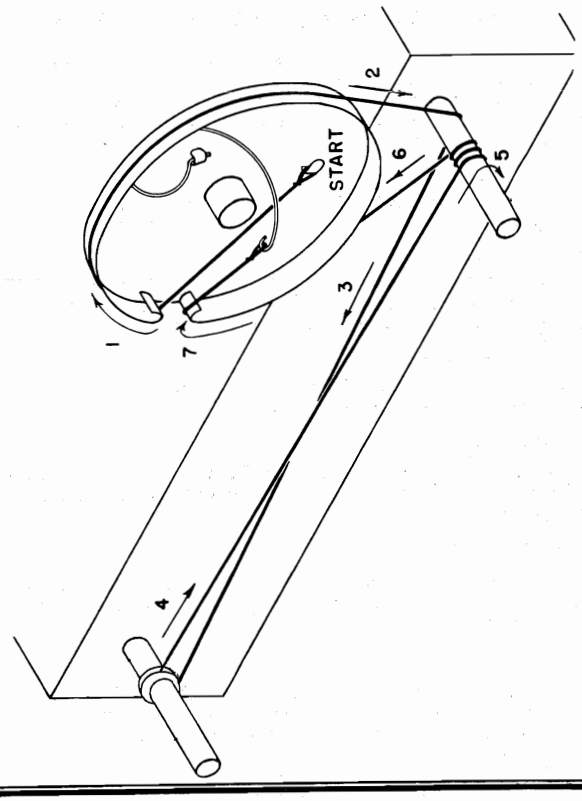

Fig. 1. Dial Stringing Diagram

©John F. Rider

Compliments of www.nucow.com

MODELS 404, 405, 410

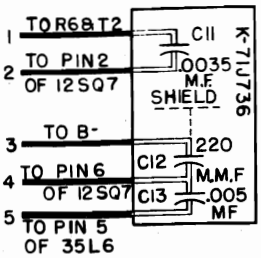

Fig. 4. Capacitor RCW-3036

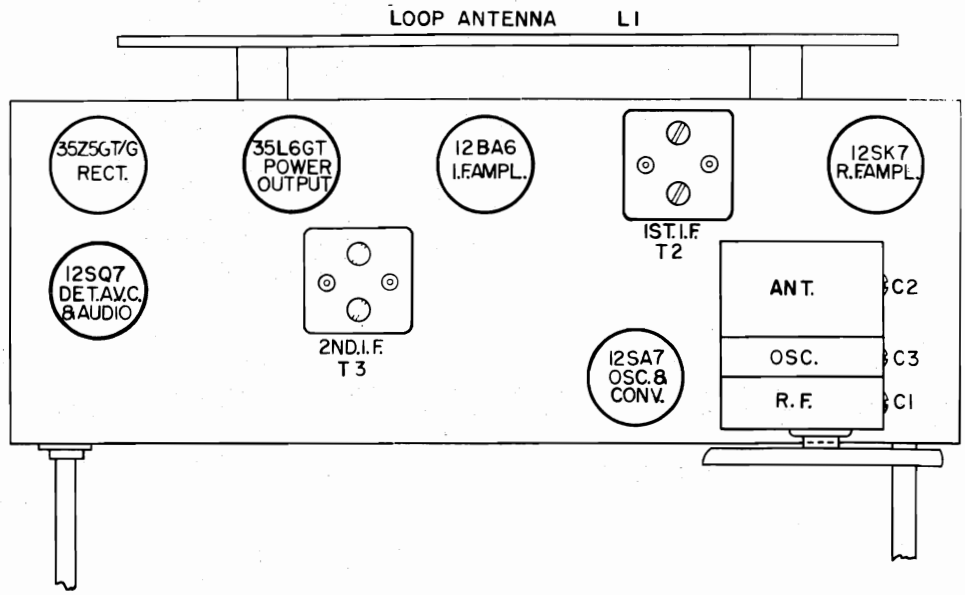

Fig. 5. Tube and Trimmer Location

MODELS 404, 405 AND 410 REPLACEMENT PARTS LIST

Cat. No.	Symbol	Description
		UNIVERSAL REPLACEMENT PARTS
UCC-037	C11	CAPACITOR—.003 mf., 600 v., paper (alternate replacement for RCW-3036)
UCC-039	C13	CAPACITOR—.005 mf., 600 v., paper (alternate replacement for RCW-3036)
UCC-041	C14, C21	CAPACITOR—.02 mf., 600 v., paper
UCC-045	C16, C17, C18, C19, C20	CAPACITOR—.05 mf., 600 v., paper
UCU-020	C5	CAPACITOR—47 mmf., mica
UCU-028	C4	CAPACITOR—100 mmf., mica
UCU-1036	C10, C12	CAPACITOR—220 mmf., mica (alternate replacement for RCW-3036)
URD-009	R12	RESISTOR—22 ohms, ½ w., carbon
URD-021	R14	RESISTOR—68 ohms, ½ w., carbon
URD-025	R1	RESISTOR—100 ohms, ½ w., carbon
URD-029	R10	RESISTOR—150 ohms, ½ w., carbon
URD-057	R2	RESISTOR—2.2 K ohms, ½ w., carbon
URD-081	R4	RESISTOR—22,000 ohms, ½ w., carbon
URD-113	R8, R13	RESISTOR—470,000 ohms, ½ w., carbon
URD-121	R9	RESISTOR—1 meg., ½ w., carbon
URD-129	R5	RESISTOR—2.2 meg., ½ w., carbon
URD-137	R7	RESISTOR—4.7 meg., ½ w., carbon
URF-049	R11	RESISTOR—1000 ohms, 2 w., carbon
		SPECIALIZED REPLACEMENT PARTS
RAB-142	L1	CABINET BACK—With antenna loop, Models 404, & 405
RAB-143	L1	CABINET BACK—With antenna loop, Model 410
RAV-128		CABINET—Wood cabinet, Model 410
RAU-345		CABINET—Brown cabinet (plastic) with dial scale & knob bezels, for Model 404
RAU-346		CABINET—Ivory cabinet (plastic) with dial scale & knob bezels, 405
RCE-050	C15A, B	CAPACITOR—50 mf., 150 v., 50 mf., 150 v.; dry electrolytic
RCN-039	C4	CAPACITOR—2 mmf., mica
RCT-046	C1A, B, C, C2, C3	CAPACITOR—Tuning capacitor with trimmers
RCW-3036	C11, C12, C13	CAPACITOR—.0035 mf., 220 mmf., .005 mf., three section, ceramic (see UCC-037, UCC-039, UCU-1036)
RDC-032		CORD—Bulk dial cord
RDK-181		KNOB—Model 404
RDK-228		KNOB—Knob and Bezel assembly, -Model 410
		SPECIALIZED REPLACEMENT PARTS (CONT'D)
RDK-229		KNOB—Model 405
RDM-024		MASK—Cardboard mask
RDP-055		POINTER—Dial scale pointer Models 404, 405
RDP-057		POINTER—Dial scale pointer Model 410
RDS-100		DIAL SCALE, Models 404 & 405
RDS-101		DIAL SCALE, Model 410
RHC-017		CLIP—Mounting clip for oscillator coil L2
RHC-037		CLIP—for dial drum
RHC-038		CLIP—for RF coil
RHG-006		GROMMET—On tuning shaft
RHG-018		GROMMET—Cushion mounting for tuning capacitor
RHG-032		GROMMET—Speaker lead ins.
RHH-004		SNAP FASTENER—Holds loop back to cabinet
RHJ-007		SPACER—Spacer bushing for mounting tuning capacitor
RHS-061		SCREW—for loop back mounting
RHS-062		SCREW—for chassis mounting
RHS-063		SCREW—for tuning capacitor mounting
RJC-004		CONNECTOR—Antenna loop lead connecting clip
RJS-003		SOCKET—Tube socket
RJS-141		SOCKET—Tube socket for 12 BA6
RJS-151		SOCKET ASSEMBLY—Pilot light socket
RLC-105	L2	COIL—Oscillator coil
RLI-125		COIL—R-F coil
RMS-118		SPRING—Dial cord tension spring
RMW-070		PULLEY—Idler pulley
RMX-174		SHAFT AND BUSHING—Tuning shaft and mounting bushing, Models 404 405
RMX-175		DRIVE SHAFT AND BUSHING ASSEMBLY, for Model 410
ROP-020		SPEAKER—PM speaker, Models 404 and 405
RRC-149	R6, S1	POTENTIOMETER—500,000 ohms; volume control and switch S1, Models 404 and 405
RRC-150		POTENTIOMETER—0.5 megohm volume control and switch, Model 410
RTL-115	T2	TRANSFORMER—First i-f transformer
RTL-116	T3	TRANSFORMER—Second i-f transformer
RTO-083	T1	TRANSFORMER—Audio output transformer
RWL-009		POWER CORD—A-c power cord and plug

©John F. Rider

Compliments of www.nucow.com

MODEL 408

MODEL 408

CAUTION

ALWAYS USE AN ISOLATION TRANSFORMER IN THE RECEIVER POWER LINE WHEN SERVICING OR ALIGNING THIS RECEIVER TO PROTECT TEST EQUIPMENT.

SPECIFICATIONS

CABINET

Material . . . . . plastic
Color . . . . . mahogany
Height . . . . . $8\frac{1}{16}$ inches
Width . . . . . $13\frac{1}{2}$ inches
Depth . . . . . $7\frac{9}{32}$ inches

ELECTRICAL

Voltage . . . . . 105–125 AC or DC
Frequency on AC . . . . . 50 to 60 cps
Wattage . . . . . 40 watts

TUNING RANGE

AM . . . . . 540–1620 kc
FM . . . . . 88–108 mc

INTERMEDIATE FREQUENCIES

AM . . . . . 455 kc
FM . . . . . 10.7 mc

POWER OUTPUT

Undistorted . . . . . 1.0 watts

LOUDSPEAKER

Type . . . . . permanent magnet
Size . . . . . $5\frac{1}{4}$ inches
Voice Coil Impedance at 410 cps . . . . . 3.2 ohms

ANTENNA

AM . . . . . built-in loop
FM . . . . . power line antenna or 300 FM ant.

GENERAL

Model 408 is a table model receiver providing reception on the AM band (540 to 1620 kc) and the FM band (88–100 mc). The receiver is housed in a mahogany colored plastic cabinet.

The receiver has a built-in FM power-line antenna. To operate the receiver from the built-in FM power cord antenna it is necessary to connect the power-line antenna wire to FM antenna terminal which is connected to pin 1 of V2 through C3.

Note: To remove the dial scale it is necessary to remove the escutcheon to gain access to the dial scale mounting screws. Remove the escutcheon by pushing forward on the escutcheon mounting studs from inside of the cabinet.

VOLTAGE CHECKS

1. AM STAGE GAIN MEASUREMENTS AT 455 KC.

Grid (Pin 1) of V3 to Grid (Pin 1 of V4) 70
Grid (Pin 1) of V4 to Pin 6 of V6 80

2. FM SENSITIVITY MEASUREMENTS.

The following voltages are required at the point of input designated to produce one volt d-c from the limiter grid (pin 1 of V5) to chassis. Measure with a VTVM or a 20,000 ohm per volt meter in series with a 200,000 ohm resistor. Connect the 200,000 ohm resistor directly to the grid of V5. Use the microamp scale of meter to measure 5 microamps d-c through 200,000 ohms (1 volt d-c). Use a 10,000 ohm resistor connected directly to the grid (pin 1) of V5 to isolate the VTVM.

FM-IF.

Couple the input signal to the point of input through a 3300 ohm resistor and a 1000 mmfd. capacitor in series. Make chassis connections short and as close to the point of input as possible.

V4 Grid (Pin 1) for One Volt at
Pin 1 of V5 . . . . . 45,000 microvolts at 10.7 mc
V3 Grid (Pin 1) for One Volt at
Pin 1 of V5 . . . . . 1,000 microvolts at 10.7 mc
V1 Cathode (Pin 8) for One Volt at
Pin 1 of V5 . . . . . 30,000 microvolts at 10.7 mc
*V1 Grid (Pin 7) for One Volt at
Pin 1 of V5 . . . . . 100 microvolts at 10.7 mc

*Note: It is necessary to disconnect the copper strap from pin 7 of V1 to the gang condenser C1 at the gang end when coupling into the converter grid.

FM-RF.

Couple the input signal into the antenna terminals.

The signal generator should be properly terminated in 300 ohms to match the input impedance of this receiver. This may be done by adding a resistor in the high side of the generator output so that the sum of the generator output impedance and the resistor totals 300 ohms. Connect high side of generator to antenna terminal which is connected to Pin 1 of V2 by C3.

Disconnect power cord antenna from the antenna terminal 25 microvolts at 88 mc for 1 volt d-c at pin 1 of V5.

3. AUDIO GAIN

.1 Volt at 400 cps applied across the volume control with volume control set at maximum should give approximately ½ watt output.

4. OSCILLATOR GRID BIAS

D-c voltage developed across R28 should be approximately 8 volts at 1000 kc, and approximately 3 volts at 98 mc measured with a vacuum tube voltmeter.

5. HUM MEASUREMENT

Hum measured across the voice coil of the speaker, with the volume control set at minimum and the band switch set on AM should not exceed 7 millivolts.

Turn the band switch to FM and connect the limiter grid (Pin 1 of V5) to chassis through .01 mfd. Set the volume control at maximum. The hum should not exceed 15 millivolts.

ALIGNMENT

EQUIPMENT REQUIRED FOR METER ALIGNMENT

1. General Electric YGS-3 or equivalent signal generator.
2. 20,000 ohm per voltmeter or vacuum tube voltmeter.
3. One 200,000 ohm ½ watt resistor.
4. Output meter.
5. Loop for coupling AM r-f signal to radio loop.
6. One 3,300 ohm ½ watt resistor.
7. One 1000 mmfd mica capacitor.

METER ALIGNMENT NOTES

1. Connect a 20,000 ohm-per-volt meter across the volume control. Use the ten volt d-c scale.

2. Connect a 20,000 ohm per volt meter from the grid (pin 1 of V5) to the chassis in series with a 200,000 ohm resistor. The resistor must be connected directly to the grid pin to minimize capacity loading and to isolate the i-f signal from the meter. Keep the signal generator output low so that the meter does not indicate more than one volt d-c at the grid (pin 1) of V5 (5 microamps through 200,000 ohms). (Use microamp scale of meter.)

A vacuum tube voltmeter may be used to measure the one volt d-c at the grid of V5.

©John F. Rider

Compliments of www.nucow.com

MODEL 408

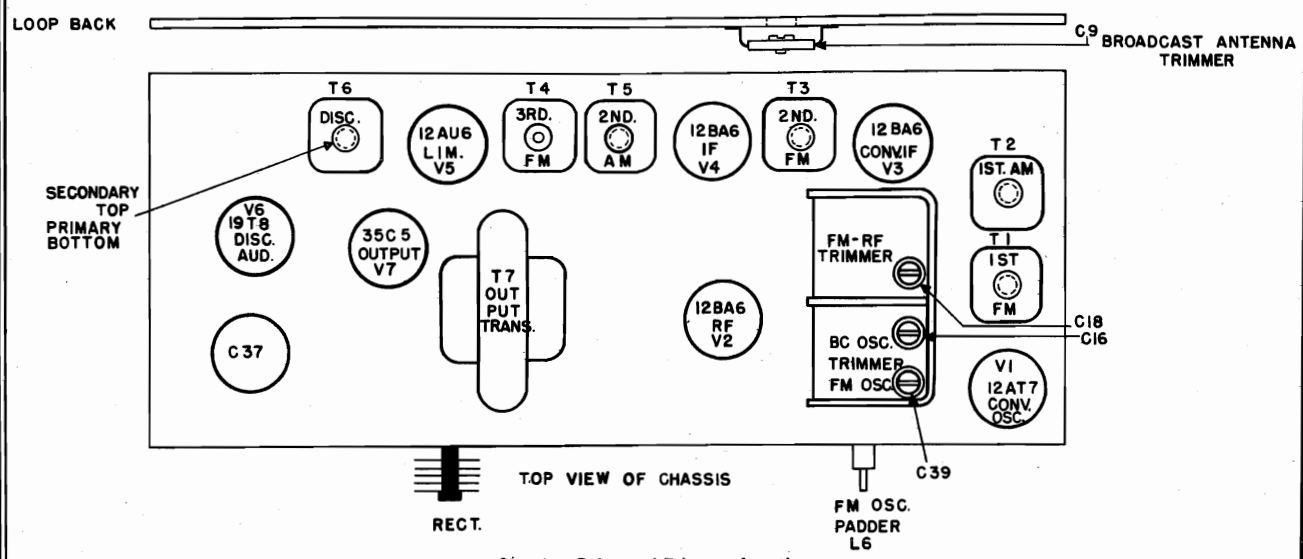

Fig. 1. Tube and Trimmer Location

3. Connect an output meter across the speaker voice coil. Turn the volume control full on. Keep the signal generator output low so that the output meter does not indicate more than ½ watt output.

4 Align the AM oscillator (C16) and the r-f trimmer (C9) by coupling the signal to the loop antenna inductively. Connect a four-turn, six-inch diameter loop of wire across the signal generator output terminals and locate the loop about one foot from the radio loop antenna. The position of the loop should not be changed during alignment to prevent possible errors in peak readings.

5. Calibration points are stamped on the back side of the tuning drum of C1. Set the wire indicator to the zero mark with C1 at maximum capacity (gang fully closed).

6. The pointer must be indexed to the vertical mark on the cabinet when the 98 mark on the back side of the tuning drum is opposite the wire indicator.

7. The termination impedance of the signal generator should be 300 ohms for FM r-f alignment. The generator impedance should be low for step 10 alignment. For steps 5, 6, 7, 8 and 9 couple the high side of the signal generator to the signal input point through a 1000 mmf capacitor in series with a 3300 ohm ½ watt carbon resistor. Make chassis connections for FM i-f alignment as short as possible and near to the input point.

METER ALIGNMENT CHART

Step No.	Signal Generator Frequency	Signal Input Point	Band Switch Setting	Dial Setting	Adjust	See Note
			AM I-F ALIGNMENT			
1	455 kc AM modulated	Pin 1 of V4 chassis.	AM	—	T5 for max.	3
2		Pin 1 of V3 and chassis			T2 for max.	
			RF I-F ALIGNMENT			
3	1620 kc AM mod.	Inductively coupled. See note 4.	AM	Gang C1 fully open	C16 for max.	3, 4, 5, 6
4	1500 kc AM mod.			Tune for max. output	C9 for max. while rocking gang C1	
			FM DISCRIMINATOR AND I-F ALIGNMENT			
5	10.7 mc unmodulated	Pin 1 of V4 and chassis	FM	—	Core of T4 for max.	2, 7
6					Secondary of T6 for zero.	1, 7
7	Detune signal generator for max. reading				Primary of T6 for max.	
8	10.7 mc unmodulated				Core of T4 for max.	2, 7
9		Pin 1 of V3 and chassis.			Cores of T3 for max.	
10		Pin 8 of V1 and chassis.			Cores of T1 for max.	
			FM R-F ALIGNMENT			
11	88 mc unmodulated	FM antenna terminals.	FM	At 88 on drum	Core of L6 for max.	2, 5, 6, 7
12	108 mc unmodulated			At 108 on drum	C39 for max.	
13				Rock in C1 for max.	C18 for max.	

©John F. Rider

Compliments of www.nucow.com

MODEL 408

EQUIPMENT REQUIRED FOR VISUAL ALIGNMENT

1. General Electric YGS-3 or equivalent sweep generator.
2. General Electric ST2A scope or equivalent and chassis.
3. One megohm ½ watt resistor.
4. One 3300 ohm ½ watt resistor.
5. One 1000 mmfd mica capacitor.

NOTES FOR VISUAL ALIGNMENT

1. Connect vertical plates of scope to the grid of limiter (pin 1 of V5) through 1 meg. resistor and to chassis.

2. Connect vertical slates of scope to pin 3 of V6 through 1 meg. and to chassis.

3. Connect vertical plates of scope across volume control R19 through 1 meg.

4. In some cases tuning of the converter grid will cause "pulling in" of the oscillator and will change the oscillator frequency. If peaking C9 or C18 as in steps 4 or 14 causes the curve to move off the screen, it is necessary to recalibrate the oscillator as in steps 3, 12 and 13.

5. The termination impedance of the signal generator should be 300 ohms to properly match the FM input impedance on this receiver.

6. The pointer must be indexed to the vertical mark on the cabinet when the 98 mark on the back of the tuning drum is opposite the wire indicator (see note 7).

7. Calibration points are stamped on the rear side of the tuning drum of C1. Set the wire indicator to the zero mark with C1 at maximum capacity (gang condenser fully closed).

8. For alignment of the AM oscillator and r-f trimmers the signal should be inductively coupled to the loop antenna, by connecting a four-turn six-inch diameter loop of wire to the signal generator terminals. Locate this loop about one foot from the radio loop antenna. The position of this loop to the radio antenna loop should not be changed during alignment to prevent errors in the peak readings.

9. When coupling generator to grid in steps 5, 6, 7, 8, 9, and 10 use couple through a 3300 ohm resistor and a 1000 mmfd mica capacitor in series. Use short chassis connections to prevent regeneration. When coupling to the grid of V1 pin 8 in step 11 the output impedance of the signal generator should be low (below 100 ohms) to give maximum signal for alignment.

VISUAL ALIGNMENT CHART

Step No.	Signal Generator Frequency	Signal Input Point	Band Switch Setting	Dial Setting	Adjust	See Note
			AM I-F VISUAL ALIGNMENT			
1	455 kc FM mod. ±20 kc at 60 cps rate	Pin 1 of V4 through .01 mfd. and chassis	AM	—	T5 for max. amplitude of curve. See Fig. 2A.	3
2		Pin 1 of V3 through .01 mfd. and chassis			T2 for max. amplitude of curve. See Fig. 2A.	
			AM R-F ALIGNMENT			
3	1620 kc AM mod. with 60 cps	Inductively coupled	AM	Gang C1 completely open	C16 for steepest slope of straight line on scope.	3, 4, 6, 7, 8
4	1500 kc FM mod. ±20 kc at 60 cps rate			Gang C1 for max amplitude of curve	C9 for max. amplitude of curve. See Fig. 2A.	
			FM I-F AND DISCRIMINATOR ALIGNMENT			
5	10.7 mc FM mod. ±300 kc at 60 cps rate	Pin 1 of V4	—		Core of T4 for max. amplitude of curve. See Fig. 2A.	1, 9
6					Secondary of T6 for symmetry of curve of Fig. 2B.	2, 9
7					Primary of T6 for max. amplitude of positive and negative peak.	
8	Repeat step 6					
9	10.7 mc FM mod. ±300 kc at 60 cps rate	Pin 1 of V4	FM	—	Core of T4 for max. amplitude of curve. See Fig. 2A.	1, 9
10		Pin 1 of V3 and chassis			Cores of T3 for max. amplitude of curve. See Fig. 2A.	
11		Pin 8 of V1 and chassis			Cores of T1 for max. amplitude of curve. See Fig. 2A.	
			FM R-F VISUAL ALIGNMENT			
12	88 mc AM mod. at 60 cps.	FM antenna terminals	FM	At 88 on C1 drum	Core of L6 steepest slope of straight line trace on scope.	1, 4, 5, 6, 7
13	108 mc AM mod. at 60 cps.			At 108 on C1 drum	C39 for steepest slope of straight line trace on scope.	
14	108 mc FM mod. ±300 kc at 60 cps rate			Rock in C1 for max.	Adjust C18 for max. amplitude of response. See Fig. 2A.	

©John F. Rider

Compliments of www.nucow.com

MODEL 408

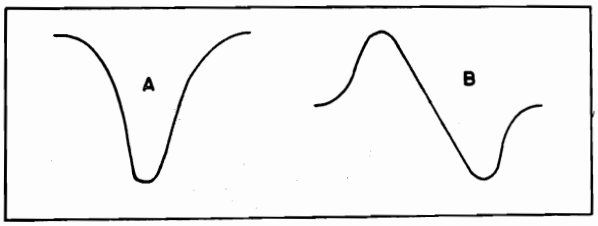

Fig. 2. I-F and Discriminator Curves

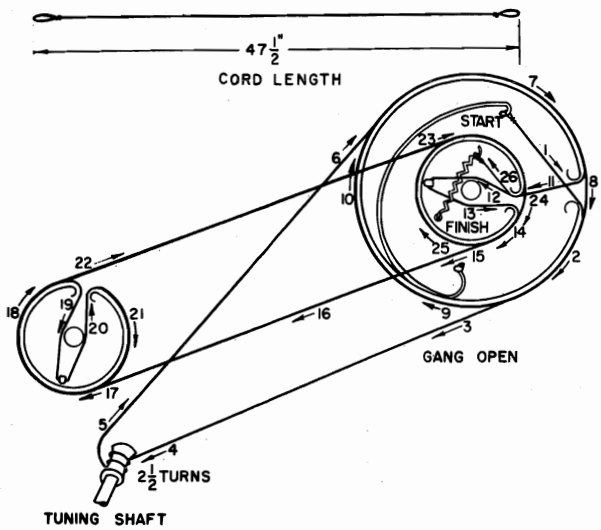

Fig. 3. Dial Stringing Diagram

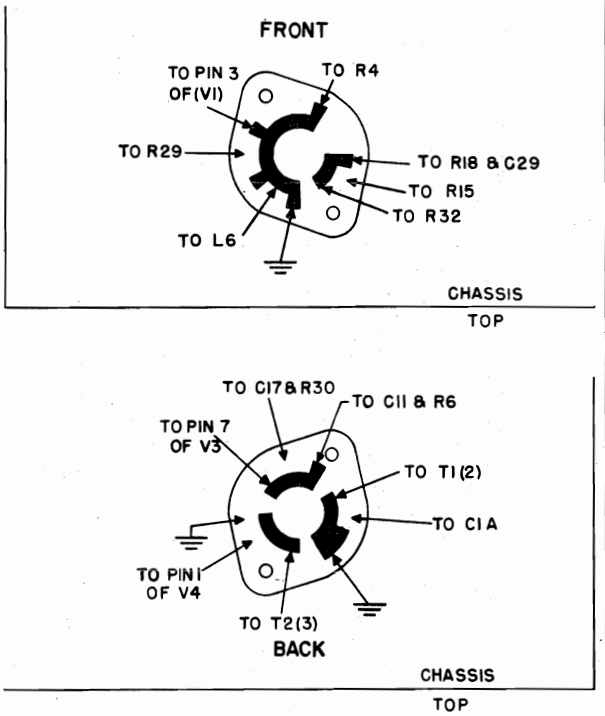

Fig. 4. Band Switch Connections

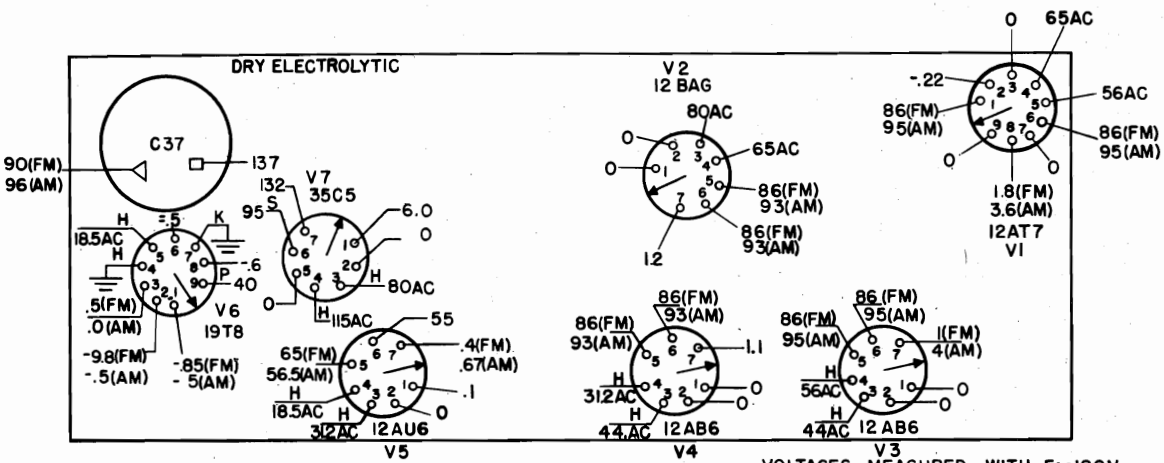

Fig. 5. Socket Voltage Diagram

©John F. Rider

Compliments of www.nucow.com

MODEL 408

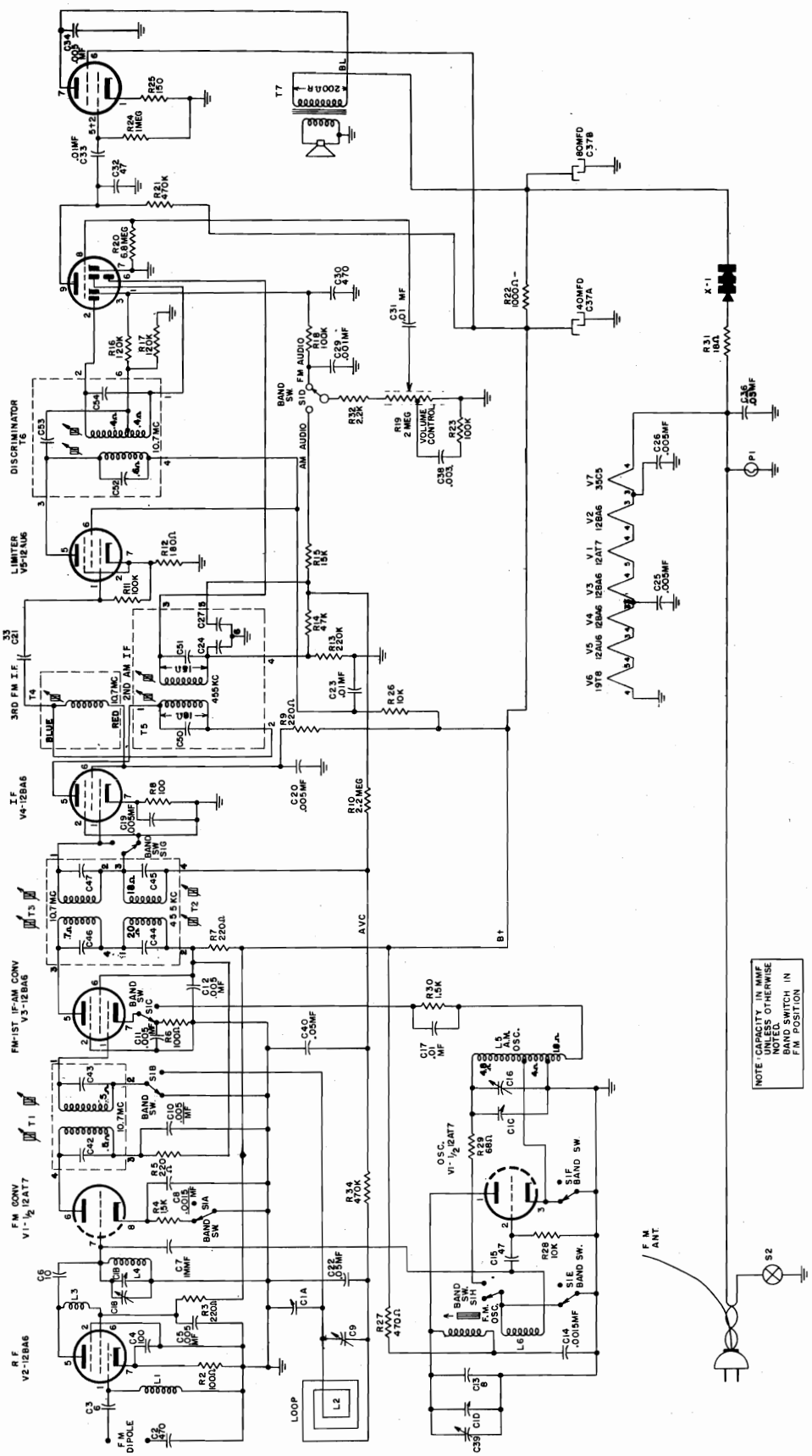

Fig. 6. Schematic diagram

©John F. Rider

Compliments of www.nucow.com

MODEL 408
REPLACEMENT PARTS LIST

UNIVERSAL REPLACEMENT PARTS

Cat. No.	Symbol	Description
*UCC-035	C29	CAPACITOR—.001 mfd., 600 v., paper
UCC-037	C38	CAPACITOR—.003 mfd., 600 v., paper
*UCC-039	C34, 36	CAPACITOR—.005 mfd., 600 v., paper
*UCC-040	C17, C23, C31, C33	CAPACITOR—.01 mfd., 600 v., paper
*UCC-045	C40, C22	CAPACITOR—.05 mfd., 600 v., paper
UCG-002	C3	CAPACITOR—6 mmf., mica
UCG-004	C6	CAPACITOR—10 mmf., mica
UCG-016	C21	CAPACITOR—33 mmf., mica
*UCG-020	C15, C32	CAPACITOR—47 mmf., mica
*UCU-044	C2, C30	CAPACITOR—470 mmf., mica
*URD-007	R31	RESISTOR—18 ohms, ½ w., carbon
*URD-021	R29	RESISTOR—68 ohms, ½ w., carbon
*URD-025	R2, R6, R8	RESISTOR—100 ohms, ½ w., carbon
*URD-029	R25	RESISTOR—150 ohms, ½ w., carbon
*URD-031	R12	RESISTOR—180 ohms, ½ w., carbon
*URD-033	R3, R5, R7, R9	RESISTOR—220 ohms, ½ w., carbon
*URD-041	R27	RESISTOR—470 ohms, ½ w., carbon
*URD-053	R4, R30	RESISTOR—1500 ohms, ½ w., carbon
*URD-057	R32	RESISTOR—2200 ohms, ½ w., carbon
*URD-073	R26, R28	RESISTOR—10,000 ohms, ½ w., carbon
*URD-077	R15	RESISTOR—15,000 ohms, ½ w., carbon
*URD-089	R14	RESISTOR—47,000 ohms, ½ w., carbon
*URD-097	R11, R18, R23	RESISTOR—100,000 ohms, ½ w., carbon
*URD-099	R16, R17	RESISTOR—120,000 ohms, ½ w., carbon
*URD-105	R13	RESISTOR—220,000 ohms, ½ w., carbon
*URD-113	R21, R24, R34	RESISTOR—470,000 ohms, ½ w., carbon
*URD-129	R10	RESISTOR—2.2 meg., ½ w., carbon
*URD-141	R20	RESISTOR—6.8 meg., ½ w., carbon

SPECIALIZED REPLACEMENT PARTS

Cat. No.	Symbol	Description
RAB-129	L2	LOOP AND BACK ASSEMBLY
RAD-049		BRACKET (Pilot light)
RAU-335		CABINET (408)
RCE-101	C37A-B	CAPACITOR—150 v., electrolytic—80–40 mfd.
RCN-001	C7	CAPACITOR—1 mmf., ceramic
RCT-041	C1A, B, C, D, 16, 18	CAPACITOR—Tuning
*RCW-026	C8, C14	CAPACITOR—1500 mmf., ceramic
RCW-3029	C4	CAPACITOR—100 mmf., ceramic
*RCW-3014	C5, C10, C11, C12, C19, C20, C25, C26	CAPACITOR—.005 mfd., 600 v., ceramic
RCW-3034	C13	CAPACITOR—8 mmf., ceramic
*RCY-016	C9	CAPACITOR—2–20 mf., trimmer
*RDC-032		DIAL CORD
RDE-080		ESCUTCHEON—(Cabinet)
RDK-208		KNOB—(408) (band)
RDK-210		KNOB ASSEMBLY (tuning) (408)
RDK-211		KNOB (volume) (408)
RDP-051		POINTER—Dial pointer
RDS-094		DIAL SCALE
RDX-046		POINTER SHAFT AND DRUM
RER-010	X1	SELENIUM RECTIFIER
*RHC-017		CLIP—(Coil mounting)
RHC-034		CLIP—(Coil mounting)
*RHH-004		SNAP FASTENER
*RHM-043		RETAINING RING—Type "C"
RHS-048		TUBE SHIELD
*RHX-010		SPACER—(Tuning condenser)
		GROMMET—(Tuning condenser)
RJS-118		TUBE SOCKET—Nine prong for V6
RJS-125		SUB TUBE SOCKET—(Seven prong)
RJS-143		TUBE SOCKET—For VI
*RJX-034		INTERLOCK TERMINAL—Female
		METAL CAP—Female
		INSULATING CAP—Female
RLA-035	L1	CHOKE—F.M. Antenna
*RLB-029	L4	CHOKE—F.M. R.F. Grid
RLC-103	L5	COIL—B.C. Oscillator
RLC-104	L6	COIL—F.M. Oscillator
RLP-017	L3	CHOKE—R.F. Plate
*RMF-006		CHASSIS FOOT
RML-049		KNOB LINK
*RMS-111		SPRING (Lg. Drum)
RMU-062		TUNING SHAFT ASSEMBLY
RMU-063		SHAFT (Band Switch)
RRC-148	R19, S2	VOLUME CONTROL AND SWITCH
*RRW-055	R22	RESISTOR—1000 ohms, w.w., 2 w.
*RSI-003		INTERLOCK—Male
RSW-078	S1	BAND SWITCH
*RTD-006	T6	F.M. DISCRIMINATOR
*RTL-079	T2	I.F. TRANSFORMER—1st B.C.
*RTL-100	T4	I.F. TRANSFORMER—3rd F.M.
RTL-111	T5	I.F. TRANSFORMER—2nd B.C.
RTL-112	T1	I.F. TRANSFORMER—1st F.M.
RTL-113	T3	I.F. TRANSFORMER—2nd F.M.
RTO-087	T7	OUTPUT TRANSFORMER
*RWL-022		POWER CORD SET—(Three wire)
RWX-031		PILOT LIGHT SOCKET ASSEMBLY
S527D		SPEAKER—5¼-inch

*USED ON PREVIOUS MODELS

©John F. Rider
Compliments of www.nucow.com

MODELS 500, 501

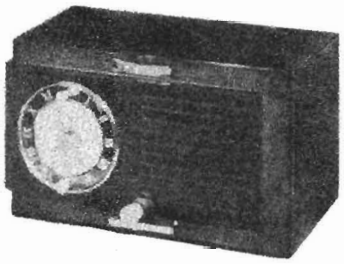

Model 500

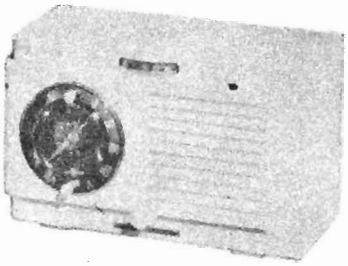

Model 501

SPECIFICATIONS

CABINET

Model	500	501
Color	Mahogany	Ivory
Height	$6\frac{3}{16}$ in.	$6\frac{3}{16}$ in.
Width	$10\frac{1}{2}$ in.	$10\frac{1}{2}$ in.
Depth	$5\frac{3}{8}$ in.	$5\frac{3}{8}$ in.

ELECTRICAL RATING (INPUT)

Voltage.....105-120 volts, a-c
Frequency.....60 cycles
Wattage.....30 watts

OPERATING FREQUENCIES

Intermediate Frequency.....455 kc
Broadcast Band.....540-1600 kc

POWER OUTPUT

Undistorted.....1
Maximum.....1.75

LOUDSPEAKER

Type.....Alnico 5 PM
Outside Cone Diameter.....4-inch
Voice Coil Impedance (400 Cycles).....3.5 ohms

TUBE COMPLEMENT

Oscillator-Converter.....Type 12SA7
I-F Amplifier.....Type 12BA6
Detector and 1st Audio.....Type 12SQ7
Power Output.....Type 50C5
Rectifier.....Type 35W4

CAUTION: One side of the power line is connected to B−. Avoid any ground connections direct to B−. Use an isolating transformer when making service adjustments, with the chassis removed from the cabinet.

RADIO CIRCUIT ALIGNMENT

ALIGNMENT FREQUENCIES

R-F.....1500 kc
R-F.....1620 kc
I-F.....455 kc

EQUIPMENT REQUIRED

1. Test oscillator with tone modulation.
2. A-c output meter, $1\frac{1}{2}$ volts full scale.
3. 0.05 mf. paper capacitor.
4. Loop.
5. Insulated screwdriver.

PROCEDURE—GENERAL

1. With the tuning scale control wheel turned so that the gang condenser plates are fully meshed, the index should read approximately $\frac{3}{16}$ inch to the right of the 550 kc scale calibration mark. If it does not, remove the control wheel from the gang condenser shaft and replace it for correct position. CAUTION: Do not attempt to correct the position by rotating the wheel on the shaft as this will cause the knob to slip.

2. For i-f alignment, it is necessary to remove the chassis from the cabinet.

3. Connect the output meter across the loudspeaker voice coil terminals.

4. Keep radio volume control at maximum and attenuate the test oscillator signal output so that the output meter reading never exceeds 1.0 volt.

5. Connect the capacitor as listed in column 2 between the output "High Side" of the test oscillator and the point of input specified.

6. For alignment of the oscillator and antenna trimmers, the input signal should be inductively coupled to the radio loop antenna, L1, by connecting a four-turn, six-inch diameter loop of bell wire across the signal generator output terminals, and then locating the loop to face the radio antenna loop about one foot away. To prevent possible errors in reference to previous signal measurement readings, the loop with respect to the radio loop should not be changed during any one set of adjustments.

ALIGNMENT CHART

Step	Connect Test Oscillator to	Test Osc. Setting	Dial Drum Setting	Adjust Trimmers for Maximum Output
1	12BA6 grid (1) in series with 0.05 mf. cap.	455 kc	Minimum Capacity	2nd i-f trans. trimmers, C14 and C15
2	12SA7 grid (8) in series with 0.05 mf. cap.	455 kc	Minimum Capacity	1st i-f trans. trimmers, C8 and C9
3	Inductively coupled to radio loop	1620 kc	Minimum Capacity	C4 (oscillator)
4	Inductively coupled to radio loop	1500 kc	Tune for Maximum	C3 (antenna)

STAGE GAIN AND VOLTAGE CHECKS

Stage gain measurements by vacuum tube voltmeter or similar measuring devices may be used to check circuit performance and isolate trouble. The gain values listed may have tolerances of 20%. Readings taken with low signal input so that AVC is not effective.

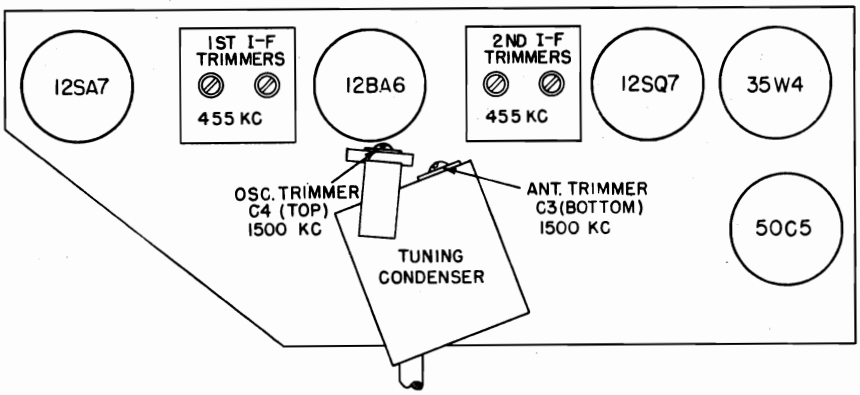

Fig. 1. Tube and Trimmer Location

©John F. Rider

Compliments of www.nucow.com

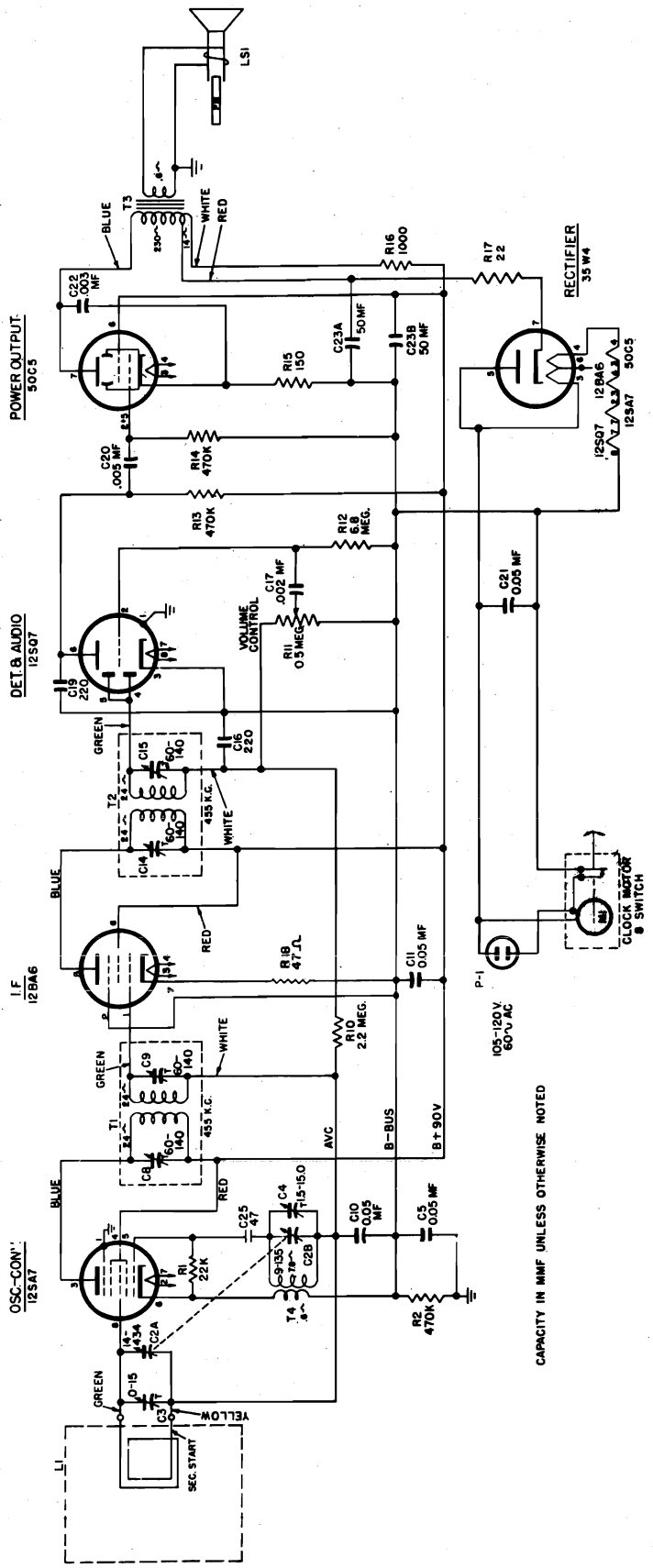

Fig. 2. Schematic Diagram, Models 500 and 501

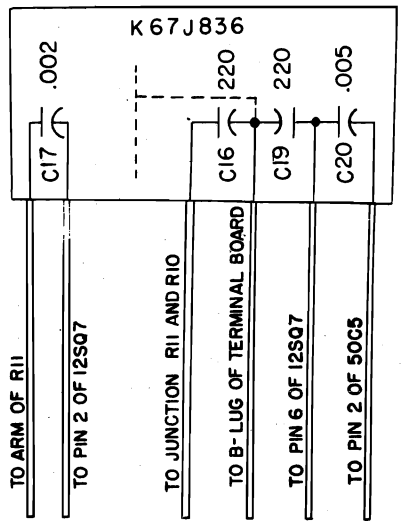

Fig. 4. Capacitor RCW-3013 (K67J836)

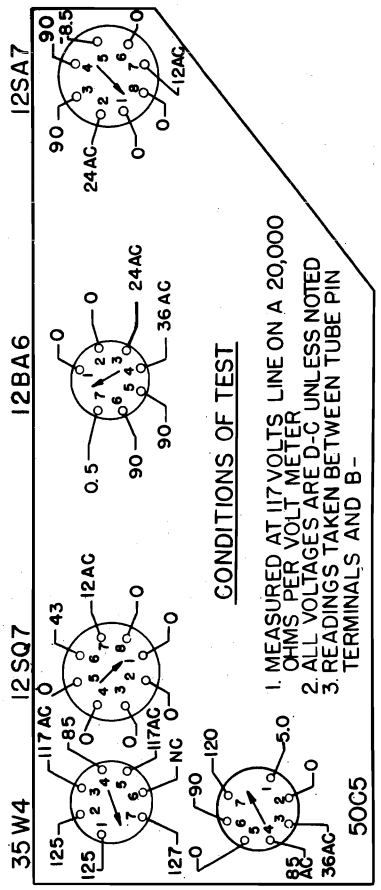

Fig. 3. Socket Voltages

©John F. Rider

Compliments of www.nucow.com

MODELS 500, 501

(1) R-F and I-F Stage Gains.
12SA7 Grid to 12BA6 Grid.....50 @ 455 kc
12BA6 Grid to 12SQ7 Diode Plate.....50 @ 455 kc
(2) Audio Gain.
0.15 volts at 400 cycles across the volume control (R11) with control set at maximum will give approximately ½-watt output across the loudspeaker, LS1, voice coil.
(3) Oscillator Grid Bias.
D-c voltage developed across the oscillator grid leak (R1) averages 8.5 volts at 1000 kc.
(4) Socket Pin Voltages.
Figure 3 shows d-c voltages from all tube pins to B− unless otherwise specified. Voltage readings much higher or lower than those specified may help localize defective components or tubes.

CLOCK SERVICE

Figure 4 shows clock parts referred to in the following paragraphs and the parts list.

CLOCK MOVEMENT DISASSEMBLY

1. Remove clock movement from case. When removing knobs, note that the Alarm-Set knob is a left-hand thread, while Alarm-Radio is a pull-off knob.
2. Remove Bezel, Hands and Dial Face.
3. Remove the motor assembly by removing two screws (A) and break two soldered joints on Field. The Field and Rotor Assembly (R) can now be removed. The Rotor is held by friction only to the Field.
4. Remove Switch Assembly (B) by removing two screws from base plate.
5. Remove Switch Shaft Assembly (C) and spacer.
6. Remove Alarm-Set Shaft Assembly (D) and spacer.
7. Remove the three front plate assembly screws that are located under the Dial Face and then remove Front Plate.
8. Remove Alarm Gear Sleeve Assembly (E), Hour Gear Sleeve Assembly (F), Minute Gear Sleeve Assembly (G), and Sweep Second Gear Shaft Assembly (H).
9. Remove Alarm Cam Gear Assembly (I) and Spring Washer (J).
10. Remove Alarm-Set Gear (K).
11. Remove Time-Set Gear and Shaft Assembly (L).
12. Remove Switch Cam Lever (M).

CLOCK MOVEMENT REASSEMBLY

Reassemble in the reverse order of disassembly, observing the following precautions:

1. The spring washer (J) should curve away from the gear when placed on the Alarm Cam Gear Assembly (I).
2. The Switch Cam Lever (M) fork must straddle the base plate post as shown in the illustration.
3. After reassembly of front plate, check the Sweep Second Gear (H) through the hole in the base plate to make sure it is free to turn.
4. Proceed with Alarm and Switch Adjustments as described below before installing hands.

ALARM AND SWITCH ADJUSTMENTS

1. Turn Alarm-Radio shaft to ALARM position.
2. Slowly rotate Time-Set shaft clockwise until the contacts of the Switch Assembly (B) close.
3. Replace Dial Face, Alarm Dial, the Minute, Hour and Second Hands. Set all Hands and Dial so that they indicate 12 o'clock. Make sure all Hands and Alarm Dial are tight on their respective shafts.
4. With Alarm-Set knob pulled out, continue to rotate Time-Set shaft clockwise and note that the vibrator arm (N) drops against field core approximately 7–10 minutes later.
5. Set alarm at some other selected position and make sure mechanism actuates within limits (±1 minute).
6. Check alarm tone of vibrator. This can be adjusted by either bending vibrator arm nearer or farther away from field core. Bend arm near anchor point.

CLEANING AND LUBRICATION

To clean, completely diassemble and clean all moving parts in carbon tetrachloride or some similar cleaner.

The inside of the sleeves and shaft surfaces may be cleaned of oxidized oil by rubbing with a fine grade of steel wool dampened in carbon tetrachloride.

Do not use too much oil and apply by means of a small wire (drop oiler). Too much oil collects dust and later oxidizes. Use only recommended clock oil, such as Nye's Celebrated Oil which may be purchased from Wm. F. Nye Co., Inc., New Bedford, or equivalent.

CLOCK TROUBLES

1. Clock will not operate—Defective field coil, defective rotor, binding of parts.
2. Clock loses time—Binding parts, too little friction on minute hand sleeve assembly, defective rotor. Clock time-set shaft bent and rubs against hole in clock bracket.
3. Noisy Clock—Rotor defective, alarm armature improperly adjusted, loose parts, or binding of moving parts.

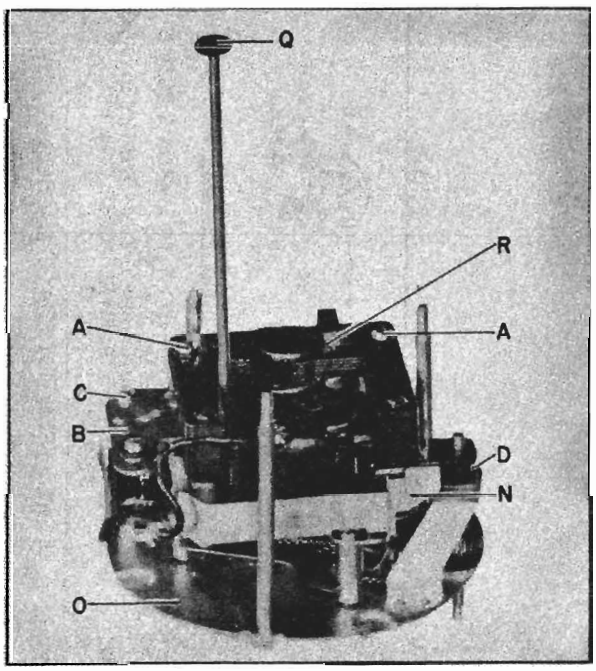

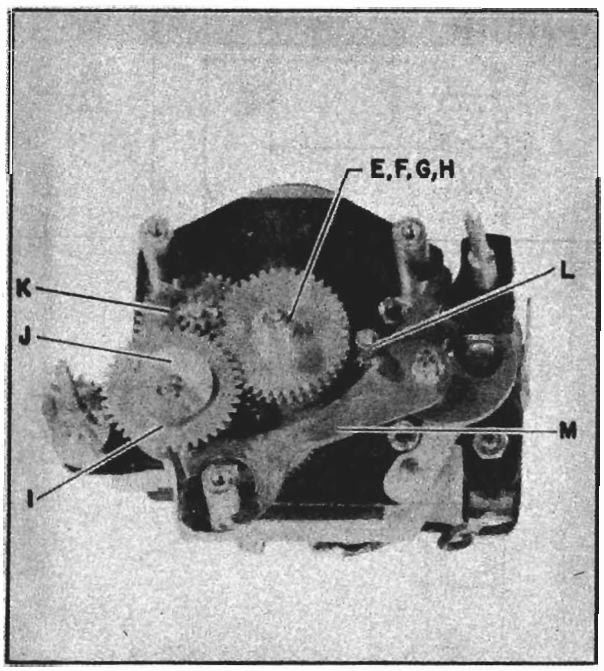

Fig. 5. Clock Part Identification

©John F. Rider

Compliments of www.nucow.com

MODELS 500, 501

MODEL 500 AND 501 REPLACEMENT PARTS

UNIVERSAL REPLACEMENT PARTS

Cat. No.	Symbol	Description
*UCC-045	C5, 10, 11, 21	CAPACITOR—.05 mf., 600 v., paper
*UCC-630	C17, 20	CAPACITOR—.01 mf., 600 v., paper (used in early production) (may replace respective sections of RCW-3013)
*UCU-036	C16, 19	CAPACITOR—220 mmf., mica (used in early production) (may replace respective sections of RCW-3013)
*UOP-421	LS1	SPEAKER—PM loudspeaker
*URD-009	R17	RESISTOR—22 ohms, ½ w., carbon
*URD-017	R18	RESISTOR—47 ohms, ½ w., carbon
*URD-029	R15	RESISTOR—150 ohms, ½ w., carbon
*URD-081	R1	RESISTOR—22,000 ohms, ½ w., carbon
*URD-113	R2, 13, 14	RESISTOR—470,000 ohms, ½ w., carbon
*URD-129	R10	RESISTOR—2.2 meg., ½ w., carbon
*URD-141	R12	RESISTOR—6.8 meg., ½ w., carbon
*URF-049	R16	RESISTOR—1000 ohms, 2 w., carbon

SPECIALIZED REPLACEMENT PARTS

Cat. No.	Symbol	Description
*RAB-097	L1	BACK—Cabinet back cover (includes loop L1)
*RAC-074		MOUNTING BRACKET—Metal back cover holds clock to cabinet
RAU-319		CABINET—Brown plastic (Model 500)
RAU-320		CABINET—White plastic (Model 501)
*RCC-074	C22	CAPACITOR—.003 mf., 600 v., paper
*RCE-050	C23A, 23B	CAPACITOR—50 mf., 150 v., 50 mf., 150 v., dry electrolytic

SPECIALIZED REPLACEMENT PARTS (Cont'd)

Cat. No.	Symbol	Description
*RCT-021	C2A, 2B, C3, C4	CAPACITOR—Tuning capacitor (oscillator and r-f section) with trimmers
*RCW-1043	C25	CAPACITOR—47 mmf., ceramic
*RCW-3013	C16, 17, 19, 20	CAPACITOR—220 mmf., .002 mf., 220 mmf., .005 mf., (4 section ceramic) (see UCC-630, UCU-036)
*RDK-028		KNOB—Volume control knob
*RDK-094		KNOB—Tuning dial wheel
*RDS-047		SCALE—Dial scale (Model 500)
*RDS-050		SCALE—Dial scale (Model 501)
*RJC-004		CLIP—Loop connector clip
*RJS-092		SOCKET—Tube socket for 50C5, 35W4
*RJS-116		SOCKET—Tube socket for 12SA7
*RJS-117		SOCKET—Tube socket for 12SQ7, 35Z5-GT
*RJS-141		SOCKET—Tube socket for 12BA6
*RLC-090	T4	COIL—Oscillator coil
*RHG-015		GROMMET—Cushion mounting for C2A, C2B
*RHH-004		SNAP FASTENER—For cabinet back
*RHJ-005		SPACER—Washer used with RHG-015
*RRC-054	R11	POTENTIOMETER—0.5 meg., volume control
*RTL-094	T1, C8, C9	TRANSFORMER—1st I-F transformer
*RTL-095	T2, C14, C15	TRANSFORMER—2nd I-F transformer
*RTO-036	T3	TRANSFORMER—Output transformer
*RWL-009		CORD—Power cord (brown) for Model 500
*RWL-016		CORD—Power cord (white) for Model 501
*RYN-005		NAMEPLATE—G-E monogram
*RZC-010	M1	CLOCK—60 cycle, 105–125 v., clock assembly

CLOCK REPLACEMENT PARTS LIST

MISCELLANEOUS

Cat. No.	Symbol	Description
*XC3X49	Q	TIME SET SHAFT KNOB—Bronze
*XC4X5		ALARM SET KNOB—Ivory
*XC10X131	L	TIME SET GEAR AND SHAFT ASSEMBLY
*XC11X11	D	ALARM SET SHAFT ASSEMBLY
*XC31X26		SWEEP SECOND HAND
*XC32X199		HOUR AND MINUTE HANDS
*XC34X139	O	FRONTPLATE ASSEMBLY
*XC55X15		ALARM DIAL
*XC58X16		CRYSTAL—2 9/16 in., round
XC59X247		NUMERAL COLOR RING—Red
*XC59X699	C	SWITCH SHAFT ASSEMBLY
*XC59X716		SWITCH KNOB—Ivory
XC61X941		DIAL FACE—(On frontplate)
XC53X128		NUMERAL RING—Bronze

CLOCK MOVEMENT

Cat. No.	Symbol	Description
*XC1X1	A	SCREW—Holds Field, No. 4-40X1 ⅛ in. R.H.
*XC1X2		No. 1204 LOCKWASHER
*XC1X6		SCREW No. 4-40 x ⅝ in. R. H.
*XC1X43		HEX NUT
*XC13X11	F	HOUR GEAR SLEEVE ASSEMBLY

CLOCK MOVEMENT (Cont'd)

Cat. No.	Symbol	Description
*XC14X15	G	MINUTE GEAR SLEEVE ASSEMBLY
*XC15X3	E	ALARM GEAR SLEEVE ASSEMBLY
*XC16X14	H	SWEEP SECOND GEAR SHAFT ASSEMBLY
*XC17X8	I	ALARM GEAR SHAFT ASSEMBLY
*XC35X39		BASEPLATE ASSEMBLY
*XC40X13		RIVET—Vibrator
*XC40X76		SWITCH ASSEMBLY—Consists of Contact Block (top), Contact Block (bottom), Contact Spring Insulator
*XC40X77	K	ALARM SET GEAR ASSEMBLY
*XC40X78	M	SWITCH CAM LEVER ASSEMBLY
*XC40X79		UPPER CONTACT SPRING ASSEMBLY
*XC40X80		LOWER CONTACT SPRING AND TIP ASSEMBLY
*XC40X202		SPREADER POST
*XC40X252	J	CAM GEAR SPRING WASHER
*XC40X260		SPACER—Switch shaft
*XC40X261		TIME SET SHAFT SPACER
*XC40X262		TIME SET SHAFT SPACER
*XC40X263		ALARM SHUT-OFF SPACER
*XC44X38		ROTOR UNIT—60 cycles
*XC45X69	R	FIELD COIL ASSEMBLY—60 cycles
*XC64X1-2-3		FRONTPLATE SCREW

* Used on other models.

©John F. Rider

Compliments of www.nucow.com

MODELS 505,
506, 507, 508

MODEL 505, 507

MODEL 506

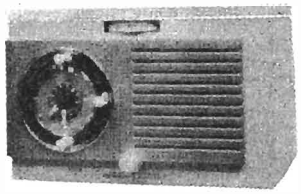

MODEL 508

SPECIFICATIONS

CABINET:

Model	508	505	507	506
Color	Blond Mah.	Brown	Maroon	Ivory
Height	6⅜ in.	6⅜ in.	6⅜ in.	6⅜ in.
Width	11½ in.	11½ in.	11½ in.	11½ in.
Depth	6¼ in.	6¼ in.	6¼ in.	6¼ in.

ELECTRICAL RATING (INPUT):

Voltage.....105-120 volts, a-c
Frequency.....60 cycles
Wattage.....30 watts

OPERATING FREQUENCIES:

Intermediate Frequency.....455 kc
Broadcast Band.....540-1600 kc

POWER OUTPUT:

Undistorted.....1
Maximum.....1.75

LOUDSPEAKER:

Type.....Alnico 5 PM
Outside Cone Diameter.....4-inch
Voice Coil Impedance (400 cycles).....3.5 ohms

TUBE COMPLEMENT:

Oscillator-Converter.....Type 12SA7
I-F Amplifier.....Type 12BA6
Detector and 1st Audio.....Type 12SQ7
Power Output.....Type 50C5
Rectifier.....Type 35W4

CAUTION: One side of the power line is connected to B–. Avoid any ground connections direct to B–. Use an isolating transformer when making service adjustments with the chassis removed from the cabinet.

GENERAL INFORMATION

The Models 505, 506, 507 and 508 are four-tube, plus rectifier tube, a-c/d-c superheterodyne receivers, employing a Beam-a-scope antenna. Special features include an electric time clock with wake-up alarm and sleep control switch. In addition, the timer receptacle at the rear of the receiver provides an outlet connection for external appliances which is controlled by the normal function of the alarm and sleep control mechanism of the clock. The radio OFF-ON switch adjacent to the timer outlet provides control of radio operation so that the radio receiver may be turned off if so desired while using the external appliance. When radio operation is to be resumed, this switch must be turned to the on position.

RADIO CIRCUIT ALIGNMENT

ALIGNMENT FREQUENCIES:

R-F.....1500 kc
R-F.....1620 kc
I-F.....455 kc

EQUIPMENT REQUIRED:

1. Test oscillator with tone modulation.
2. A-c output meter, 1½ volts full scale.
3. 0.05 mf. paper capacitor.
4. Loop
5. Insulated screwdriver.

PROCEDURE—GENERAL:

1. With the tuning scale control wheel turned so that the gang condenser plates are fully meshed, the index should read approximately $\frac{3}{16}$ inch to the right of the 550 kc scale calibration mark. If it does not, remove the control wheel from the gang condenser shaft and replace it for correct position. CAUTION: Do not attempt to correct the position by rotating the wheel on the shaft as this will cause the knob to slip.

2. For i-f alignment, it is necessary to remove the chassis from the cabinet.

3. Connect the output meter across the loudspeaker voice coil terminals.

4. Keep radio volume control at maximum and attenuate the test oscillator signal output so that the output meter reading never exceeds 1.0 volt.

5. Connect the capacitor as listed in column 2 between the output "High Side" of the test oscillator and the point of input specified. The oscillator output cable ground lead is connected to receiver chassis.

6. For alignment of the oscillator and antenna trimmers, the input signal should be inductively coupled to the radio loop antenna, L1, by connecting a four-turn, six-inch diameter loop of bell wire across the signal generator output terminals, and then locating the loop to face the radio antenna loop about one foot away. To prevent possible errors in reference to previous signal measurement readings, the loop with respect to the radio loop should not be changed during any one set of adjustments.

ALIGNMENT CHART

Step	Connect Test Oscillator to	Test Osc. Setting	Dial Drum Setting	Adjust Trimmers for Maximum Output
1	12SK7 grid (4) in series with 0.05 mf. cap.	455 kc	Minimum Capacity	2nd I-F trans. trimmers, C14 and C15
2	12BA6 grid (1) in series with 0.05 mf. cap	455 kc	Minimum Capacity	1st I-F trans. trimmers, C8 and C9
3	Inductively coupled to radio loop	1620 kc	Minimum Capacity	C4 (oscillator)
4	Inductively coupled to radio loop	1500 kc	Tune for Maximum	C3 (antenna)

STAGE GAIN AND VOLTAGE CHECKS

Stage gain measurements by vacuum tube voltmeter or similar measuring devices may be used to check circuit per-

©John F. Rider

Compliments of www.nucow.com

MODELS 505, 506, 507, 508

formance and isolate trouble. The gain values listed may have tolerances of 20%. Readings taken with low signal input so that AVC is not effective.

(1) I-F Stage Gains.
12SA7 Grid to 12SK7 Grid.....50 @ 455 kc
12SK7 Grid to 12SQ7 Diode Plate.....50 @ 455 kc

(2) Audio Gain.
0.15 volts at 400 cycles across the volume control (R11) with control set at maximum will give approximately ½-watt output across the loudspeaker, LS1, voice coil.

(3) Oscillator Grid Bias.
D-c voltage developed across the oscillator grid leak (R1) averages 8.5 volts at 1000 kc.

(4) Socket Pin Voltages.
Figure 3 shows voltages from all tube pins to B− unless otherwise specified. Voltage readings much higher or lower than those specified may help localize defective components or tubes.

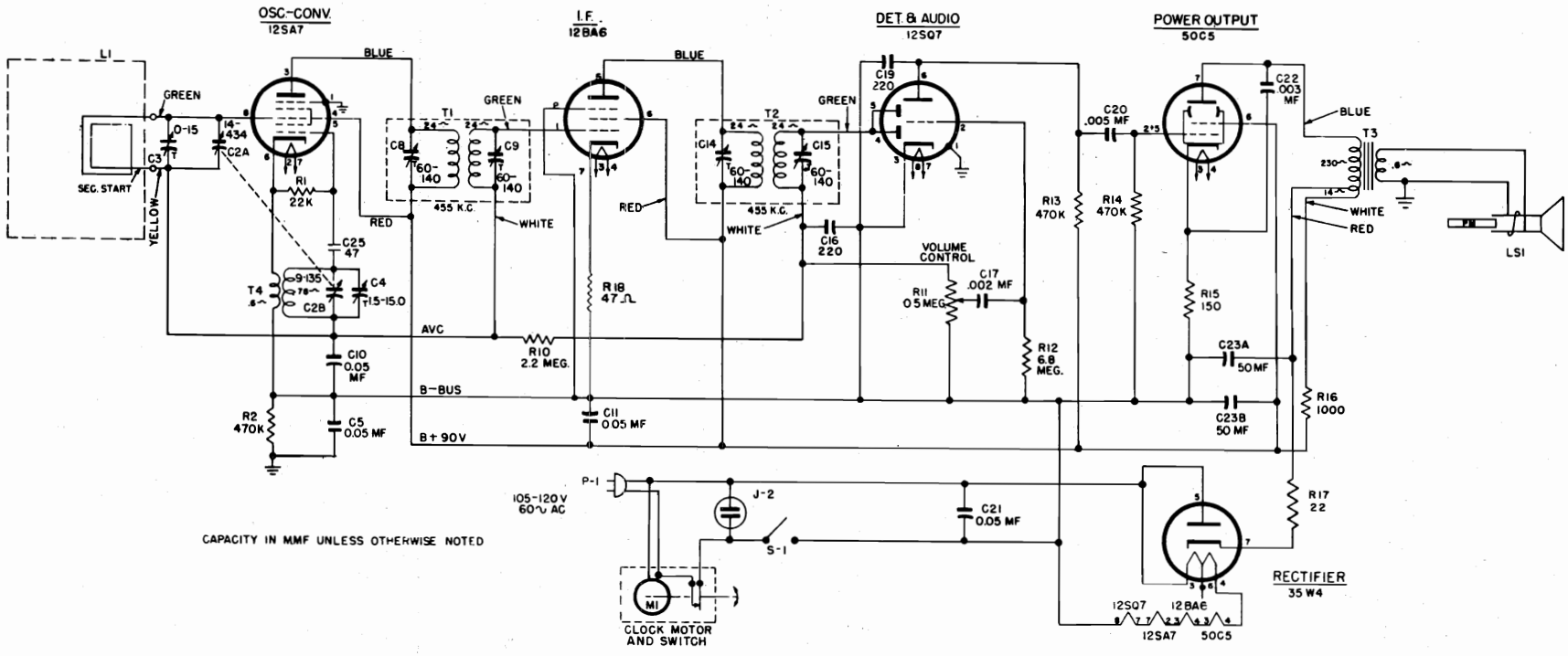

NOTE: Loop connections are: green lead to inside turn of antenna loop, yellow lead to outside turn.

Fig. 1. Schematic Diagram

©John F. Rider

Compliments of www.nucow.com

MODELS 505,
506, 507, 508

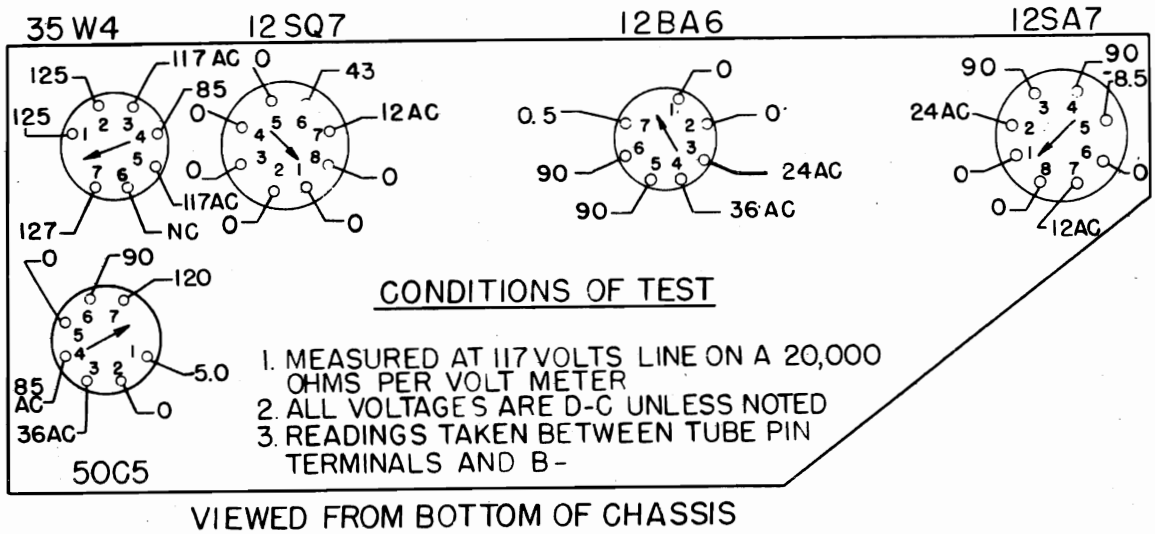

Fig. 2. Socket Voltages

CLOCK SERVICE

Figures 4 and 5 show clock parts referred to in the following paragraphs and the parts list.

CLOCK MOVEMENT DISASSEMBLY

1. Remove clock movement from case. When removing knobs, note that the Alarm-Set knob is a left-hand thread, while Wake-Up Manual and Sleep are pull-off knobs.
2. Remove Bezel, Hands and Dial Faces.
3. Remove the motor assembly by removing two screws (3 and 4) and break two soldered joints on Field. The Field and Rotor Assembly (11 and 2) can now be removed. The Rotor is held by friction only, to the Field.
4. Remove Switch Assembly by removing two screws (12) from base plate.
5. Remove Switch Shaft Assembly (13) and spacer.
6. Remove Alarm-Set Shaft Assembly (6) and spacer.
7. Remove the three front plate assembly screws that are located under the Dial Face and then remove Front Plate.
8. Remove the following gear assemblies and control levers in the order listed below:

(a) Sweep Control Shaft and Segment Gear (30)
(b) Alarm Dial Gear (16)
(c) Hour Hand Gear (17)
(d) Alarm Signal Cam and Gear, and Friction Washer (27, 26)
(e) Sweep Control Switch Lever (29)
(f) Pinion Drive Gear Assembly (15) (drives Sleep Control Segment Gear)
(g) Alarm Control Switch Cam Lever (8)
(h) Time Set Shaft and Gear, and Spacer (14, 20)
(i) Drive Gear and Pinion Assembly (28)
(j) Minute Hand Gear (18)
(k) Sweep Second Hand Gear (19)

CLOCK MOVEMENT REASSEMBLY

Reassemble in the reverse order of diassembly, observing the following precautions:

1. The spring washer (26) should curve away from the gear when placed on the Alarm Cam Gear Assembly (27).
2. The Switch Cam Lever fork (8) must straddle the base plate post as shown in the illustration.
3. After reassembly of front plate, check the Sweep Second Gear (19) through the hole in the base plate to make sure it is free to turn.
4. Proceed with Alarm and Switch Adjustments as described below before installing hands.

ALARM AND SWITCH ADJUSTMENTS

1. Turn Wake-Up Manual shaft to WAKE UP position.
2. Slowly rotate Time Set shaft clockwise until the contacts 21 and 22 of the Switch Assembly close.
3. Replace Dial Face, Alarm Dial, the Minute, Hour and Second Hands. Set all Hands so that they indicate 12 o'clock. Set figure 12 of the alarm dial to index with the smaller pointer of the hour hand. Make sure all Hands and Alarm Dial are tight on their respective shafts.
4. With Alarm Set knob pulled out, continue to rotate Time Set shaft clockwise and note that the Alarm vibrator arm drops against field core approximately 7–10 minutes later.
5. Set alarm at some other selected position and make sure mechanism actuates within limits (±1 minute).
6. Check alarm tone of vibrator. This can be adjusted by either bending vibrator arm nearer or farther away from field core. Bend arm near anchor point.

CLEANING AND LUBRICATION

To clean, completely disassemble and clean all moving parts in carbon tetrachloride or some similar cleaner.

The inside of the sleeves and shaft surfaces may be cleaned of oxidized oil by rubbing with a fine grade of steel wool dampened in carbon tetrachloride.

Do not use too much oil and apply by means of a small wire (drop oiler). Too much oil collects dust and later oxidizes. Use only recommended clock oil, such as Nye's Celebrated Oil which may be purchased from Wm. F. Nye Co., Inc., New Bedford, or equivalent.

CLOCK TROUBLES

1. Clock will not operate—Defective field coil, defective rotor, binding of parts.
2. Clock loses time—Binding parts, too little friction on minute hand sleeve assembly, defective rotor. Clock time set shaft bends and rubs against hole in clock bracket.
3. Noisy Clock—Rotor defective, alarm armature improperly adjusted, loose parts, or binding of moving parts.

©John F. Rider

Compliments of www.nucow.com

MODELS 505, 506, 507, 508

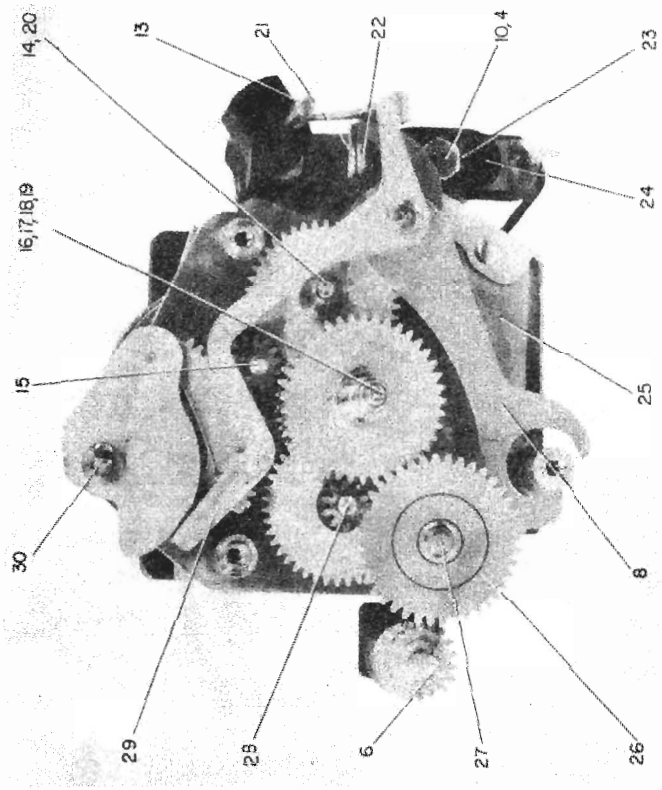

Fig. 4. Front View of Clock, Front Plate Removed

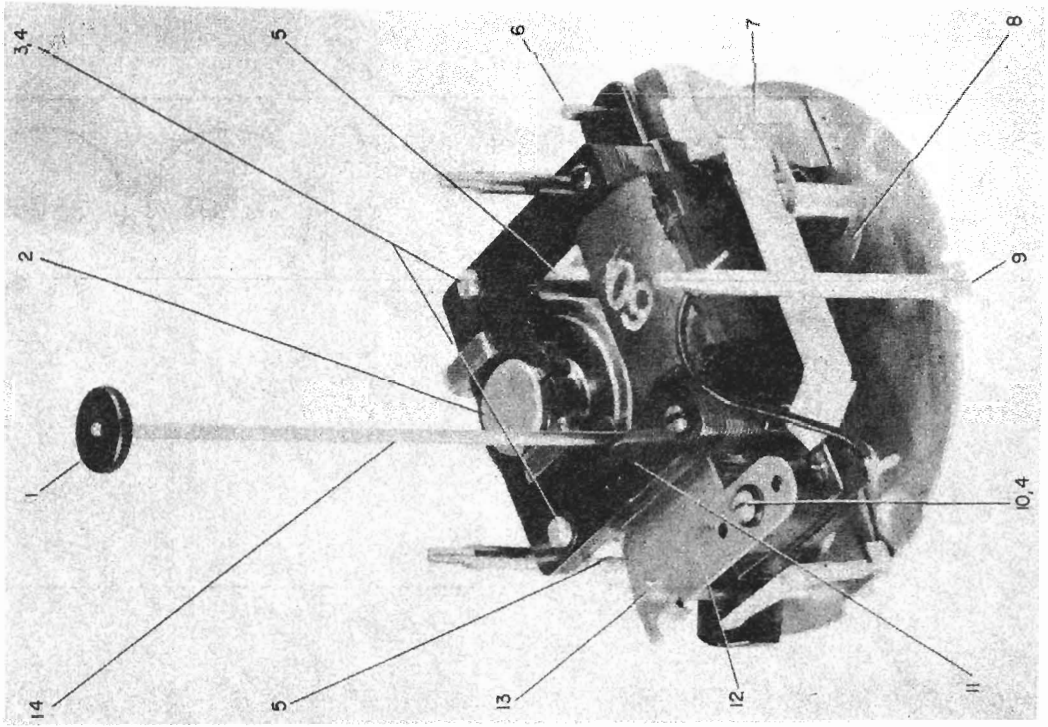

Fig. 3. Back View of Clock

©John F. Rider

Compliments of www.nucow.com

MODELS 505,
506, 507, 508

SLEEP CONTROL BOOSTER SPRING

The illustration of Figure 5 shows the position of the booster spring, Cat. No. RMS-205, as viewed from the rear of the clock mechanism. This spring provides tension for proper segment gear and cam operation. One end of the spring is fastened to the cam stud, the other end to the brass Front Plate Stud.

C16, C17, C19, AND C20

The lead identification for the four-section ceramic capacitor RCW-3013 (K67J836) can be observed from the illustration of Figure 6.

Should it become necessary to service this unit, either the defective section can be cut out of the circuit and replaced by an individual capacitor (see Parts Replacement List, items UCC-036, UCU-039 and UCU-1036), or a complete new four-section unit, RCW-3013, can be installed.

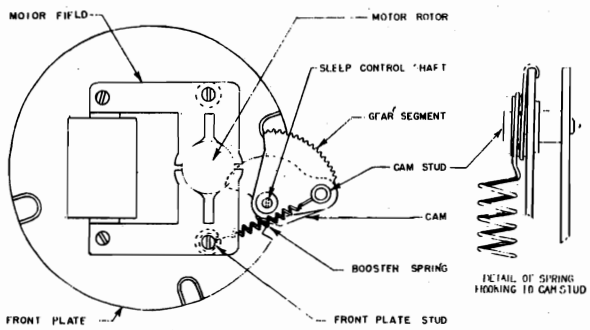

Fig. 5. Sleep Control Mechanism

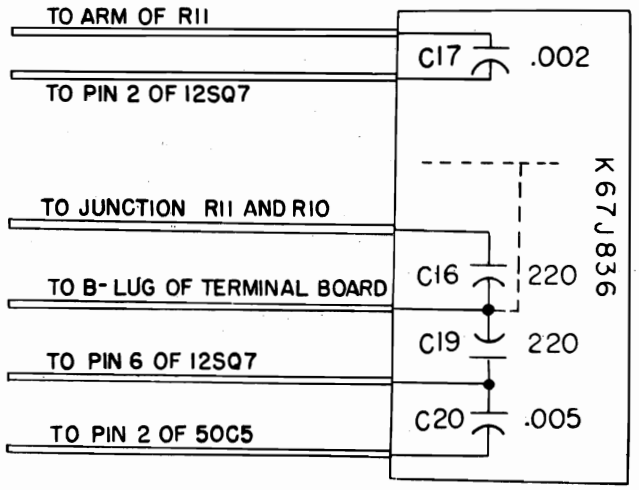

Fig. 6. Capacitor RCW-3013 (K67J836)

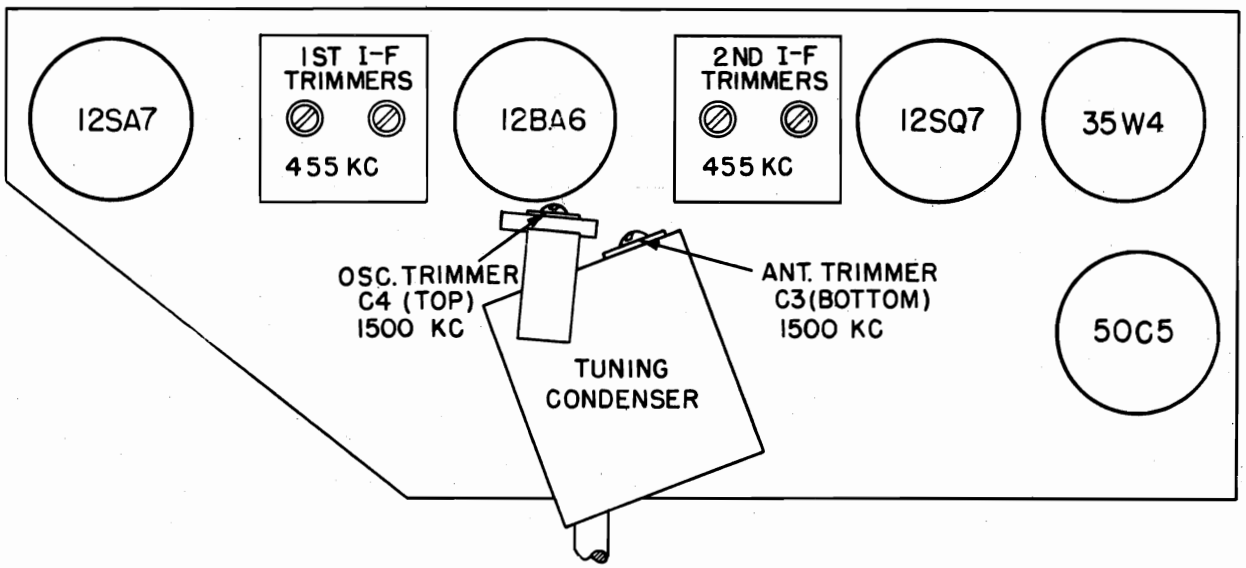

Fig. 7. Tube and Trimmer Location

©John F. Rider

Compliments of www.nucow.com

MODELS 505, 506, 507, 508

RADIO REPLACEMENT PARTS LIST

Cat. No.	Symbol	Description
		UNIVERSAL REPLACEMENT PARTS
UCC-028	C5, 10, 11	CAPACITOR—.05 mf., 400 v., paper
UCC-036	C17	CAPACITOR—.002 mf., 600 v., paper
UCC-039	C20	CAPACITOR—.005 mf., 600 v., paper
UCC-045		CAPACITOR—.05 mf., 600 v., paper (will replace respective sections of RCW-3013).
UCU-1036	C16, 19	CAPACITOR—220 mmf., mica
UOP-421	LS1	SPEAKER—PM loudspeaker
URD-009	R17	RESISTOR—22 ohms, ½ w., carbon
URD-017	R18	RESISTOR—47 ohms, ½ w., carbon
URD-029	R15	RESISTOR—150 ohms, ½ w., carbon
URD-081	R1	RESISTOR—22,000 ohms, ½ w., carbon
URD-113	R2, 13, 14	RESISTOR—470,000 ohms, ½ w., carbon
URD-129	R10	RESISTOR—2.2 meg., ½ w., carbon
URD-141	R12	RESISTOR—6.8 meg., ½ w., carbon
URF-049	R16	RESISTOR—1000 ohms, 1 w., carbon
		SPECIALIZED REPLACEMENT PARTS
RAB-116	L1	BACK—Cabinet back cover (includes loop L1) for Models 505, 506, 507
RAB-120	L1	BACK—Cabinet back cover (includes loop L1) for Model 508
*RAC-060		SHIELD PLATE—Metal plate covers bottom of chassis, Models 505, 506, 507
*RAC-073		MOUNTING BRACKET—Metal back cover holds clock to cabinet
RAU-305		CABINET—Ivory plastic (Model 506)
RAU-317		CABINET—Brown plastic (Model 505)
RAU-318		CABINET—Maroon plastic (Model 507)
RAU-322		CABINET—Blond mahogany finish plastic (Model 508)
*RCC-045	C21	CAPACITOR—.05 mf., 600 v., paper
*RCC-074	C22	CAPACITOR—.003 mf., 600 v., paper
*RCE-050	C23A, B	CAPACITOR—50 mf., 150 v.; 50 mf., 150 v., dry electrolytic

Cat. No.	Symbol	Description
		SPECIALIZED REPLACEMENT PARTS (Cont.)
*RCT-021	C2A, 2B	CAPACITOR—Tuning capacitor (oscillator and r-f-section)
*RCW-1043	C25	CAPACITOR—47 mmf., ceramic
*RCW-3013	C16, 17, 19, 20	CAPACITOR—220 mmf., .002 mf., 220 mmf., .005 mf. (4 section ceramic)
*RDK-028		KNOB—Volume control knob
*RDK-094		KNOB—Tuning dial wheel. Does not include dial scale, see item RDS-090
RDS-090		DIAL SCALE—Paper scale
*RHC-018		SNAP FASTENER—For cabinet back
RHG-015		GROMMET—For tuning cond.
RHH-004		FASTENER—Snap fastener for holding back
RHI-010		STRAIN RELIEF GROMMET
*RHJ-005		SPACER FOR TUNING CONDENSER
RHS-043		PLUG AND SWITCH MOUNTING CABINET—Model 508
*RJC-004		CLIP—Loop connector clip
RJJ-008		APPLIANCE RECEPTACLE
*RJS-116		SOCKET—Tube oscket for 12SA7
*RJS-117		SOCKET—Tube socket for 12SQ7
*RJS-092		SOCKET—Tube socket for 50C5, 35W4
*RJS-141		SOCKET—For 12BA6 tube, 7 pin
*RLC-090	T4	COIL—Oscillator coil
RMS-205		SLEEP CONTROL BOOSTER SPRING
*RRC-054	R11	POTENTIOMETER—0.5 meg., volume control
*RSS-005		SWITCH—ON-OFF Switch
*RTL-094	T1	TRANSFORMER—1st I-F transformer
*RTL-095	T2	TRANSFORMER—2nd I-F transformer
RTO-036	T3	TRANSFORMER—Output transformer
*RWL-009		CORD—Power cord (brown) for Model 64
*RWL-016		CORD—Power cord (white) for Model 65
RYN-005		NAMEPLATE G.E. MONOGRAM
*RZC-009	M1	CLOCK—60 cycle, 105–125 v., clock assembly

CLOCK REPLACEMENT PARTS LIST

Cat. No.	Symbol	Description
		MISCELLANEOUS
*XC3X36	1	KNOB—Time set shaft knob (bronze)
*XC4X5		KNOB—Alarm set knob (ivory)
*XC31X26		HAND—Sweep second hand
*XC32X199		HANDS—Hour and minute hands (luminous)
*XC53X31		BEZEL—Outer mounting rim
*XC53X117		BEZEL—Numeral ring (gold finish)
*XC55X15		DIAL—Alarm dial scale
*XC58X16		CRYSTAL—Glass crystal
*XC59X247		RING—Color ring for numeral bezel
*XC59X716		KNOB—Wake-up Manual and Sleep control knob (ivory)
*XC61X937		DIAL—Clock dial scale (luminous)
		CLOCK MOVEMENT
*XC1X1	3	SCREW—Holds field core to baseplate, #4–40 x 1⅛" long, round head
*XC1X2	4	LOCKWASHER—Under screw head of switch assembly mounting screw and field core mounting
*XC1X6	10	SCREW—Used to assemble switch assembly to switch bracket
*XC1X43	23	HEX NUT—For screw mounting switch assembly to switch bracket
*XC10X141	14	SHAFT ASSEMBLY—Time set shaft and gear assembly
*XC11X11	6	SHAFT ASSEMBLY—Alarm set shaft and gear assembly
*XC13X11	17	GEAR ASSEMBLY—Hour hand gear and sleeve assembly
*XC14X32	18	GEAR ASSEMBLY—Minute hand friction gear, pinion gear and sleeve assembly
*XC15X3	16	GEAR ASSEMBLY—Alarm dial gear and sleeve assembly
*XC16X14	19	GEAR ASSEMBLY—Sweep second hand gear and shaft assembly
*XC17X8	27	GEAR AND CAM—Alarm signal cam and gear assembly
*XC34X173	9	FRONT PLATE ASSEMBLY—Complete with case studs and alarm set shaft spring (7)
*XC35X93	25	BASE PLATE AND BACK GEAR—Base plate assembled complete with studs, back gear and pinion, and vibrator

Cat. No.	Symbol	Description
		CLOCK MOVEMENT (Cont.)
*XC40X76	24	SWITCH INSULATOR ASSEMBLY—Consists of: two plastic and one fibre switch contact spring spacers
*XC40X77	28	GEAR AND SPRING ASSEMBLY—Drives alarm dial gear and hour hand gear (complete with pinion and shaft, pinion and gear, spring, washers and retaining clip)
*XC40X80	21	CONTACT ASSEMBLY—Lower switch contact and spring
*XC40X185		SPRING—Switch control shaft index spring (for cam indexed control shafts)
*XC40X194	29	LEVER—Sleep control switch lever
*XC40X196	15	GEAR AND SPRING ASSEMBLY—Pinion drive for sleep control segment gear (consists of pinion gear, pinion gear and shaft, spring, washers, and retaining clip)
*XC40X197	8	LEVER—Alarm control switch cam lever
*XC40X198	22	CONTACT ASSEMBLY—Upper switch contact and spring with attached fibre arm
*XC40X202	5	SPACER BUSHING—Field core spacer at screw mounting to base plate
*XC40X252	26	WASHER—Alarm signal cam and gear friction washer
*XC40X275		SPACER BUSHING—Wake-up Manual switch control shaft bushing
*XC40X276	20	SPACER BUSHING—For time set shaft
XC40X277	30	SHAFT—Sleep control shaft and gear segment assembly
*XC44X38	2	MOTOR ROTOR ASSEMBLY—Cased rotor and pinion (60 cycles)
*XC45X69	11	MOTOR FIELD ASSEMBLY—Consists of: core, shading poles, and field coil (60 cycles)
*XC59X699	13	SHAFT ASSEMBLY—Wake-up Manual control shaft assembly (detent spring index type)
*XC59X723	13	SHAFT ASSEMBLY—Wake-up Manual control shaft assembly (cam index type)
*XC64X1		SCREW—Switch bracket and front plate mounting screws

©John F. Rider

Compliments of www.nucow.com

MODELS 509, 530

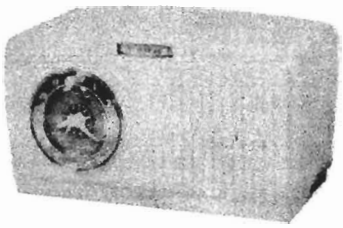

MODEL 509

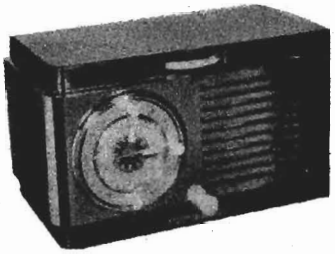

MODEL 530

SPECIFICATIONS

CABINET:

Model	530	509
Color	Bleached Mah.	White
Height	6⅜ in.	6⅜ in.
Width	11½ in.	11½ in.
Depth	6¼ in.	6¼ in.

ELECTRICAL RATING (INPUT):

Voltage.....105-120 volts, a-c
Frequency.....60 cycles
Wattage.....30 watts

OPERATING FREQUENCIES:

Intermediate Frequency.....455 kc
Broadcast Band.....540-1600 kc

POWER OUTPUT:

Undistorted.....1
Maximum.....1.75

LOUDSPEAKER:

Type.....Alnico 5 PM
Outside Cone Diameter.....4-inch
Voice Coil Impedance (400 cycles).....3.5 ohms

TUBE COMPLEMENT:

Oscillator-Converter.....Type 12SA7
I-F Amplifier.....Type 12BA6
Detector and 1st Audio.....Type 12SQ7
Power Output.....Type 50C5
Rectifier.....Type 35W4

CAUTION: One side of the power line is connected to B−. Avoid any ground connections direct to B−. Use an isolating transformer when making service adjustments with the chassis removed from the cabinet.

GENERAL INFORMATION

The Models 509 and 530 are four-tube, plus rectifier tube, a-c/d-c superheterodyne receivers, employing a Beam-a-scope antenna. Special features include an electric time clock with wake-up alarm and sleep control switch. In addition, the timer receptacle at the rear of the receiver provides an outlet connection for external appliances which is controlled by the normal function of the alarm and sleep control mechanism of the clock. The radio OFF-ON switch adjacent to the timer outlet provides control of radio operation so that the radio receiver may be turned off if so desired while using the external appliance. When radio operation is to be resumed, this switch must be turned to the on position.

RADIO CIRCUIT ALIGNMENT

ALIGNMENT FREQUENCIES:

R-F.....1500 kc
R-F.....1620 kc
I-F.....455 kc

EQUIPMENT REQUIRED:

1. Test oscillator with tone modulation.
2. A-c output meter, 1½ volts full scale.
3. 0.05 mf. paper capacitor.
4. Loop.
5. Insulated screwdriver.

PROCEDURE—GENERAL:

1. With the tuning scale control wheel turned so that the gang condenser plates are fully meshed, the index should read approximately $\frac{3}{16}$ inch to the right of the 550 kc scale calibration mark. If it does not, remove the control wheel from the gang condenser shaft and replace it for correct position. CAUTION: Do not attempt to correct the position by rotating the wheel on the shaft as this will cause the knob to slip.
2. For i-f alignment, it is necessary to remove the chassis from the cabinet.
3. Connect the output meter across the loudspeaker voice coil terminals.
4. Keep radio volume control at maximum and attenuate the test oscillator signal output so that the output meter reading never exceeds 1.0 volt.
5. Connect the capacitor as listed in column 2 between the output "High Side" of the test oscillator and the point of input specified. The oscillator output cable ground lead is connected to receiver chassis.
6. For alignment of the oscillator and antenna trimmers, the input signal should be inductively coupled to the radio loop antenna, L1, by connecting a four-turn, six-inch diameter loop of bell wire across the signal generator output terminals, and then locating the loop to face the radio antenna loop about one foot away. To prevent possible errors in reference to previous signal measurement readings, the loop with respect to the radio loop should not be changed during any one set of adjustments.

ALIGNMENT CHART

Step	Connect Test Oscillator to	Test Osc. Setting	Dial Drum Setting	Adjust Trimmers for Maximum Output
1	12SK7 grid (4) in series with 0.05 mf. cap.	455 kc	Minimum Capacity	2nd I-F trans. trimmers, C14 and C15
2	12BA6 grid (1) in series with 0.05 mf. cap	455 kc	Minimum Capacity	1st I-F trans. trimmers, C8 and C9
3	Inductively coupled to radio loop	1620 kc	Minimum Capacity	C4 (oscillator)
4	Inductively coupled to radio loop	1500 kc	Tune for Maximum	C3 (antenna)

STAGE GAIN AND VOLTAGE CHECKS

Stage gain measurements by vacuum tube voltmeter or similar measuring devices may be used to check circuit per-

©John F. Rider

Compliments of www.nucow.com

formance and isolate trouble. The gain values listed may have tolerances of 20%. Readings taken with low signal input so that AVC is not effective.

(1) I-F Stage Gains.
12SA7 Grid to 12SK7 Grid . . . . . 50 @ 455 kc
12SK7 Grid to 12SQ7 Diode Plate . . . . . 50 @ 455 kc

(2) Audio Gain.
0.15 volts at 400 cycles across the volume control (R11) with control set at maximum will give approximately ½-watt output across the loudspeaker, LS1, voice coil.

(3) Oscillator Grid Bias.
D-c voltage developed across the oscillator grid leak (R1) averages 8.5 volts at 1000 kc.

(4) Socket Pin Voltages.
Figure 2 shows voltages from all tube pins to B− unless otherwise specified. Voltage readings much higher or lower than those specified may help localize defective components or tubes.

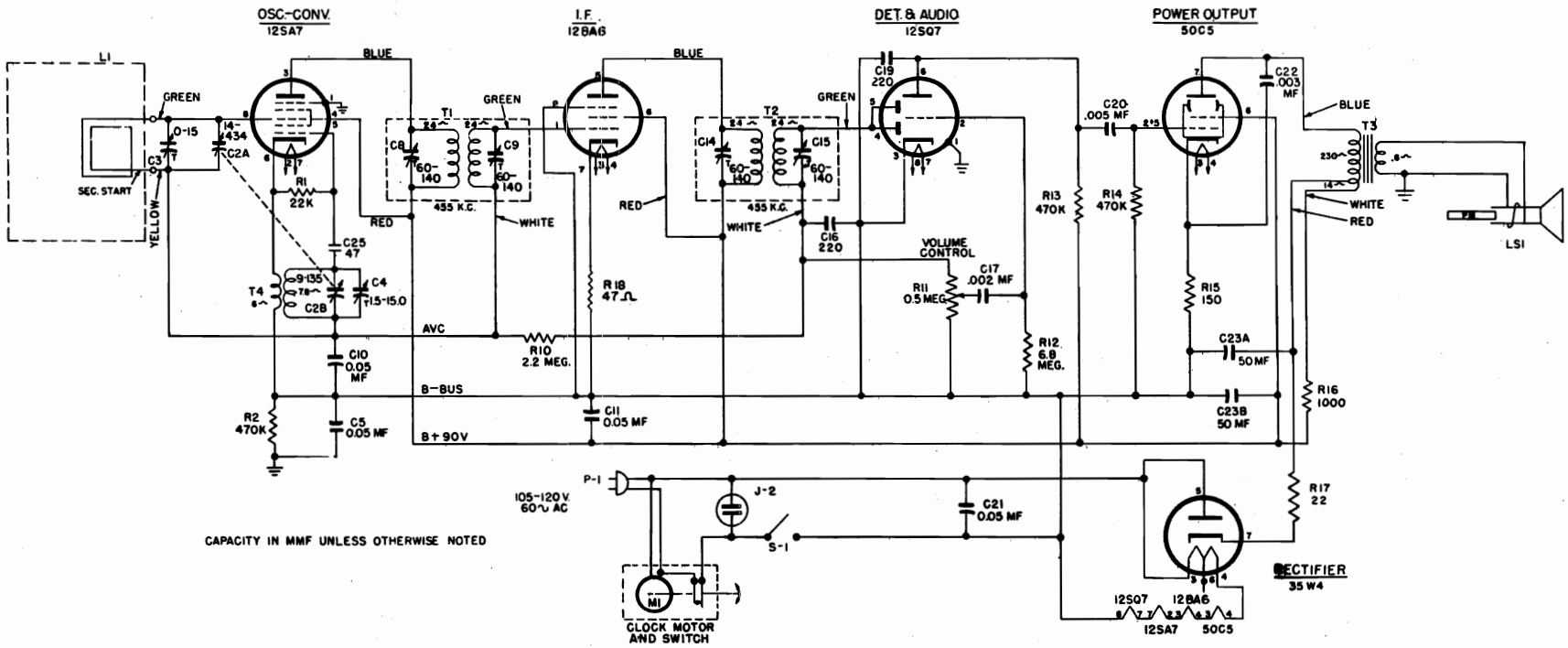

NOTE: Loop connections are: green lead to inside turn of antenna loop, yellow lead to outside turn.

Fig. 1. Schematic Diagram

©John F. Rider

Compliments of www.nucow.com

MODELS 509, 530

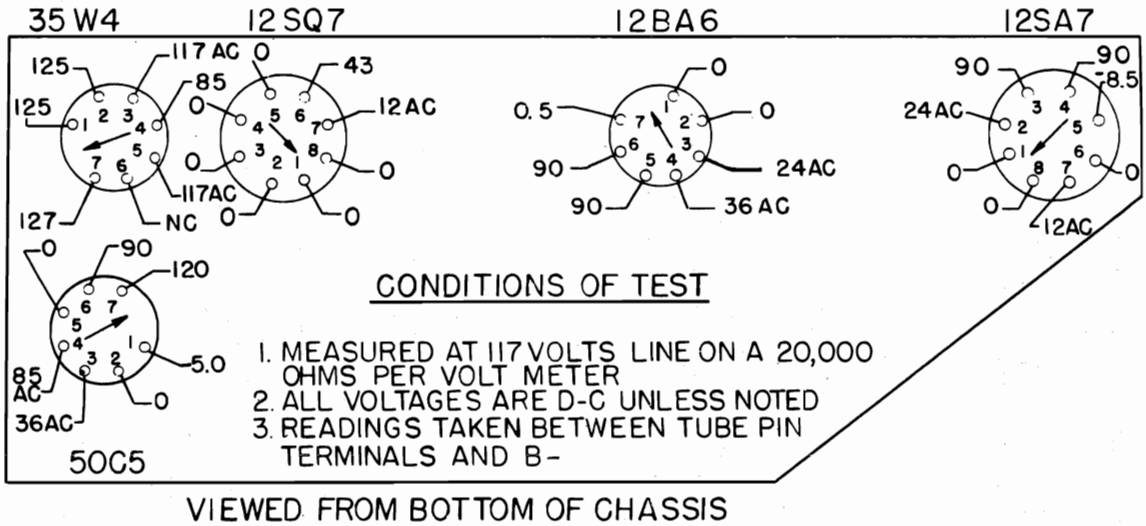

VIEWED FROM BOTTOM OF CHASSIS

Fig. 2. Socket Voltages

CLOCK SERVICE

Figures 3 and 4 show clock parts referred to in the following paragraphs and the parts list.

CLOCK MOVEMENT DISASSEMBLY

1. Remove clock movement from case. When removing knobs, note that the Alarm-Set knob is a left-hand thread, while Wake-Up Manual and Sleep are pull-off knobs.
2. Remove Bezel, Hands and Dial Faces.
3. Remove the motor assembly by removing two screws (3 and 4) and break two soldered joints on Field. The Field and Rotor Assembly (11 and 2) can now be removed. The Rotor is held by friction only, to the Field.
4. Remove Switch Assembly by removing two screws (12) from base plate.
5. Remove Switch Shaft Assembly (13) and spacer.
6. Remove Alarm-Set Shaft Assembly (6) and spacer.
7. Remove the three front plate assembly screws that are located under the Dial Face and then remove Front Plate.
8. Remove the following gear assemblies and control levers in the order listed below:
   (a) Sweep Control Shaft and Segment Gear (30)
   (b) Alarm Dial Gear (16)
   (c) Hour Hand Gear (17)
   (d) Alarm Signal Cam and Gear, and Friction Washer (26, 27)
   (e) Sweep Control Switch Lever (29)
   (f) Pinion Drive Gear Assembly (15) (drives Sleep Control Segment Gear)
   (g) Alarm Control Switch Cam Lever (8)
   (h) Time Set Shaft and Gear, and Spacer (14, 20)
   (i) Drive Gear and Pinion Assembly (28)
   (j) Minute Hand Gear (18)
   (k) Sweep Second Hand Gear (19)

CLOCK MOVEMENT REASSEMBLY

Reassemble in the reverse order of disassembly, observing the following precautions:

1. The spring washer (26) should curve away from the gear when placed on the Alarm Cam Gear Assembly (27).
2. The Switch Cam Lever fork (8) must straddle the base plate post as shown in the illustration.
3. After reassembly of front plate, check the Sweep Second Gear (19) through the hole in the base plate to make sure it is free to turn.
4. Proceed with Alarm and Switch Adjustments as described below before installing hands.

ALARM AND SWITCH ADJUSTMENTS

1. Turn Wake-Up Manual shaft to WAKE UP position.
2. Slowly rotate Time Set shaft clockwise until the contacts 21 and 22 of the Switch Assembly close.
3. Replace Dial Face, Alarm Dial, the Minute, Hour and Second Hands. Set all Hands so that they indicate 12 o'clock. Set figure 12 of the alarm dial to index with the smaller pointer of the hour hand. Make sure all Hands and Alarm Dial are tight on their respective shafts.
4. With Alarm Set knob pulled out, continue to rotate Time Set shaft clockwise and note that the Alarm vibrator arm drops against field core approximately 7–10 minutes later.
5. Set alarm at some other selected position and make sure mechanism actuates within limits (±1 minute).
6. Check alarm tone of vibrator. This can be adjusted by either bending vibrator arm nearer or farther away from field core. Bend arm near anchor point.

CLEANING AND LUBRICATION

To clean, completely disassemble and clean all moving parts in carbon tetrachloride or some similar cleaner.

The inside of the sleeves and shaft surfaces may be cleaned of oxidized oil by rubbing with a fine grade of steel wool dampened in carbon tetrachloride.

Do not use too much oil and apply by means of a small wire (drop oiler). Too much oil collects dust and later oxidizes. Use only recommended clock oil, such as Nye's Celebrated Oil which may be purchased from Wm. F. Nye Co., Inc., New Bedford, or equivalent.

CLOCK TROUBLES

1. Clock will not operate—Defective field coil, defective rotor, binding of parts.
2. Clock loses time—Binding parts, too little friction on minute hand sleeve assembly, defective rotor. Clock time set shaft bends and rubs against hole in clock bracket.
3. Noisy Clock—Rotor defective, alarm armature improperly adjusted, loose parts, or binding of moving parts.

©John F. Rider

Compliments of www.nucow.com

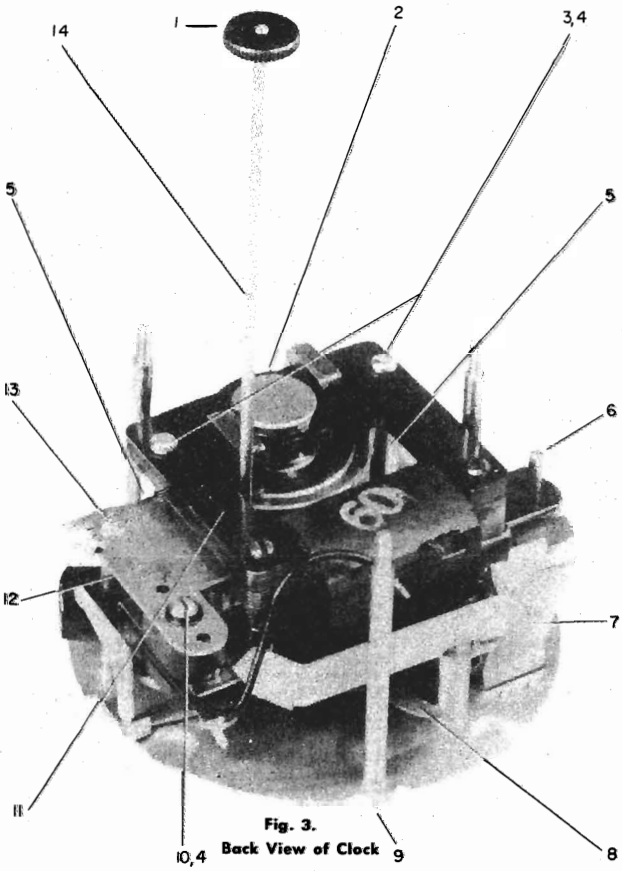

Fig. 3. Back View of Clock

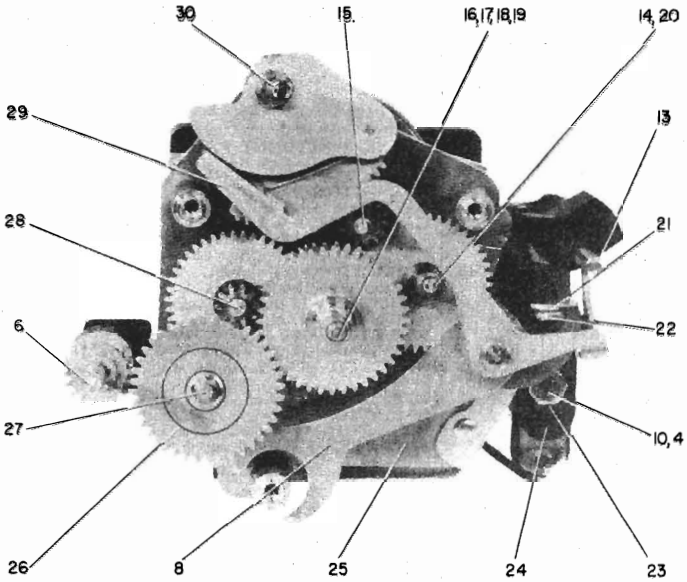

Fig. 4. Front View of Clock, Front Plate Removed

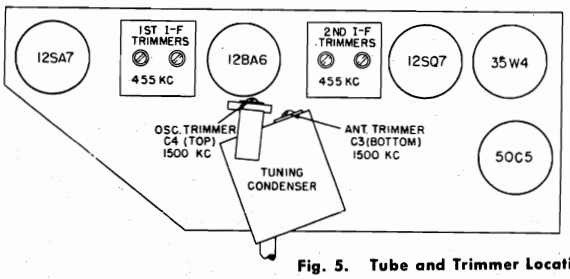

Fig. 5. Tube and Trimmer Location

C16, C17, C19, AND C20

The lead identification for the four-section ceramic capacitor RCW-3013 (K67J836) can be observed from the illustration of Figure 6.

Should it become necessary to service this unit, either the defective section can be cut out of the circuit and replaced by an individual capacitor (see Parts Replacement List, items UCC-036, UCU-039 and UCU-1036), or a complete new four-section unit, RCW-3013, can be installed.

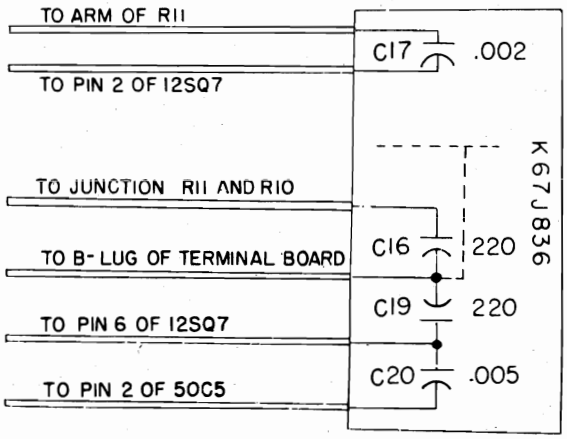

Fig. 6. Capacitor RCW-3013 (K67J836)

SLEEP CONTROL BOOSTER SPRING

The illustration of Figure 7 shows the position of the booster spring, Cat. No. RMS-205, as viewed from the rear of the clock mechanism. This spring provides tension for proper segment gear and cam operation. One end of the spring is fastened to the cam stud, the other end to the brass Front Plate Stud.

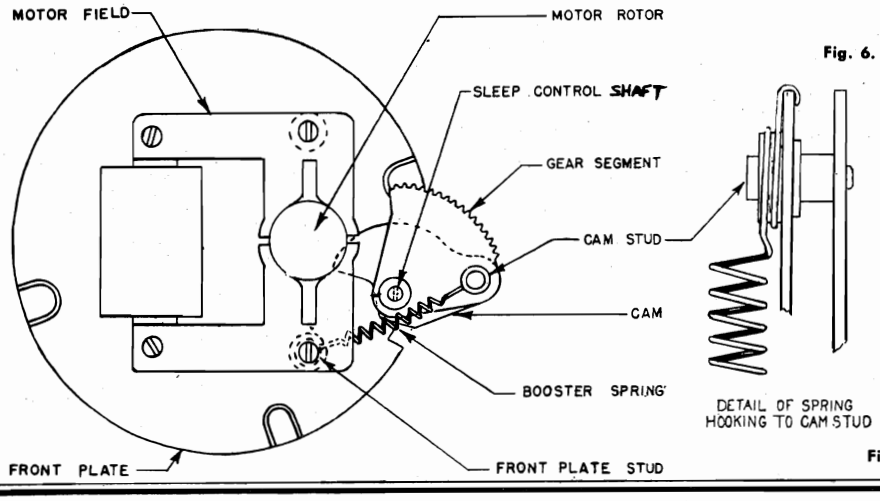

Fig. 7. Sleep Control Mechanism

©John F. Rider

Compliments of www.nucow.com

MODELS 509, 530

RADIO REPLACEMENT PARTS LIST—MODELS 509 AND 530

Cat. No.	Symbol	Description
		UNIVERSAL REPLACEMENT PARTS
*UCC-028	C5, 10, 11	CAPACITOR—.05 mf., 400 v., paper
*UCC-036	C17	CAPACITOR—.002 mf., 600 v., paper (will replace respective sections of RCW-3013).
*UCC-039	C20	CAPACITOR—.005 mf., 600 v., paper (will replace respective sections of RCW-3013).
*UCC-045	C21	CAPACITOR—.05 mf., 600 v., paper
*UCU-1036	C16, 19	CAPACITOR—220 mmf., mica (will replace respective sections of RCW-3013).
*URD-009	R17	RESISTOR—22 ohms, ½ w., carbon
*URD-017	R18	RESISTOR—47 ohms, ½ w., carbon
*URD-029	R15	RESISTOR—150 ohms, ½ w., carbon
*URD-081	R1	RESISTOR—22,000 ohms, ½ w., carbon
*URD-113	R2, 13, 14	RESISTOR—470,000 ohms, ½ w., carbon
*URD-129	R10	RESISTOR—2.2 meg., ½ w., carbon
*URD-141	R12	RESISTOR—6.8 meg., ½ w., carbon
*URF-049	R16	RESISTOR—1000 ohms, 2 w., carbon
*DL1RS-400-CG16	LS1	SPEAKER—PM loudspeaker (less T3)
		SPECIALIZED REPLACEMENT PARTS
*RAB-116	L1	BACK—Cabinet back cover (includes loop L1) for Model 509
*RAB-120	L1	BACK—Cabinet back cover (includes loop L1) for Model 530
*RAC-060		SHIELD PLATE—Metal plate covers bottom of chassis
*RAC-073		MOUNTING BRACKET—Metal back cover holds clock to cabinet
RAU-325		CABINET—White plastic (Model 509)
RAU-330		CABINET—Bleached mahogany finish plastic (Model 530)
*RCC-074	C22	CAPACITOR—.003 mf., 600 v., paper
*RCE-050	C23A, B	CAPACITOR—50 mf., 150 v.; 50 mf., 150 v., dry electrolytic
*RCT-021	C2A, 2B	CAPACITOR—Tuning capacitor (oscillator and r-f section)

Cat. No.	Symbol	Description
		SPECIALIZED REPLACEMENT PARTS (Cont.)
*RCW-1043	C25	CAPACITOR—47 mmf., ceramic
*RCW-3013	C16, 17, 19, 20	CAPACITOR—220 mmf., .002 mf., 220 mmf., .005 mf. (4 section ceramic)
*RDK-028		KNOB—Volume control knob, Model 530
*RDK-094		KNOB—Tuning dial wheel. Does not include dial scale, see item RDS-090
RDK-203		KNOB—Volume control knob (red) for Model 509
*RDS-090		DIAL SCALE—Paper scale
*RHG-015		GROMMET—For tuning cond.
*RHH-004		FASTENER—Snap fastener for holding back
RHI-010		STRAIN RELIEF INSULATOR
*RHJ-005		SPACER FOR TUNING CONDENSER
RHS-043		BRACKET—For receptacle, J2 and switch, S1
*RJC-004		CLIP—Loop connector clip
*RJJ-008	J2	APPLIANCE RECEPTACLE
*RJS-116		SOCKET—Tube socket for 12SA7
*RJS-117		SOCKET—Tube socket for 12SQ7
*RJS-092		SOCKET—Tube socket for 50C5, 35W4
*RJS-141		SOCKET—For 12BA6 tube, 7 pin
*RLC-090	T4	COIL—Oscillator coil
RMS-205		SLEEP CONTROL BOOSTER SPRING
*RRC-054	R11	POTENTIOMETER—0.5 meg., volume control
RSW-067	S1	SWITCH—Radio ON-OFF switch at rear of receiver
*RTL-094	T1	TRANSFORMER—1st I-F transformer
*RTL-095	T2	TRANSFORMER—2nd I-F transformer
RTO-036	T3	TRANSFORMER—Output transformer
*RWL-009		CORD—Power cord (brown) for Model 530
*RWL-106		CORD—Power cord (white) for Model 509
RYN-007		NAMEPLATE—General Electric monogram
*RZC-009	M1	CLOCK—60 cycle, 105–125 v., clock assembly for Model 530
RZC-011	M1	CLOCK—60 cycle, 105-125 v., clock assembly

†CLOCK REPLACEMENT PARTS LIST—MODELS 509 AND 530

Cat. No.	Symbol	Description
		MISCELLANEOUS
*XC3X36	1	KNOB—Time set shaft knob (bronze)
*XC4X5		KNOB—Alarm set knob (ivory)
*XC31X26		HAND—Sweep second hand (Model 530)
*XC32X199		HANDS—Hour and minute hands (luminous) (Model 530)
*XC53X31		BEZEL—Outer mounting rim (Model 530)
*XC53X117		BEZEL—Numeral ring (gold finish) (Model 530)
*XC55X15		DIAL—Alarm dial scale
*XC58X16		CRYSTAL—Glass crystal
*XC59X247		RING—Color ring for numeral bezel (Model 530)
*XC59X716		KNOB—Wake-up Manual and Sleep control knob (ivory)
*XC61X937		DIAL—Clock dial scale (luminous) (Model 530)
¶RZA-001		BEZEL—Outer mounting rim
¶RZA-002		BEZEL—Numeral ring (gold finish)
¶RZA-003		RING—Color ring for numeral bezel
¶RZD-001		DIAL—Clock dial scale (luminous)
¶RZH-001		HAND—Sweep second hand
¶RZH-002		HANDS—Hour and minute hands
		CLOCK MOVEMENT
*XC1X1	3	SCREW—Holds field core to baseplate, #4-40 x 1 1/4" long, round head
*XC1X2	4	LOCKWASHER—Under screw head of switch assembly mounting screw and field core mounting
*XC1X6	10	SCREW—Used to assemble switch assembly to switch bracket
*XC1X43	23	HEX NUT—For screw mounting switch assembly to switch bracket
*XC10X141	14	SHAFT ASSEMBLY—Time set shaft and gear assembly
*XC11X11	6	SHAFT ASSEMBLY—Alarm set shaft and gear assembly
*XC13X11	17	GEAR ASSEMBLY—Hour hand gear and sleeve assembly
*XC14X32	18	GEAR ASSEMBLY—Minute hand friction gear, pinion gear and sleeve assembly
*XC15X3	16	GEAR ASSEMBLY—Alarm dial gear and sleeve assembly
*XC16X14	19	GEAR ASSEMBLY—Sweep second hand gear and shaft assembly
*XC17X8	27	GEAR AND CAM—Alarm signal cam and gear assembly

Cat. No.	Symbol	Description
		CLOCK MOVEMENT (Cont.)
*XC34X173	9	FRONT PLATE ASSEMBLY—Complete with case studs and alarm set shaft spring (7)
*XC35X93	25	BASE PLATE AND BACK GEAR—Base plate assembled complete with studs, back gear and pinion, and vibrator
*XC40X76	24	SWITCH INSULATOR ASSEMBLY—Consists of: two plastic and one fibre switch contact spring spacers
*XC40X77	28	GEAR AND SPRING ASSEMBLY—Drives alarm dial gear and hour hand gear (complete with pinion and shaft, pinion and gear, spring, washers and retaining clip)
*XC40X80	21	CONTACT ASSEMBLY—Lower switch contact and spring
*XC40X185		SPRING—Switch control shaft index spring (for cam indexed control shafts)
*XC40X194	29	LEVER—Sleep control switch lever
*XC40X196	15	GEAR AND SPRING ASSEMBLY—Pinion drive for sleep control segment gear (consists of pinion gear, pinion gear and shaft, spring, washers, and retaining clip)
*XC40X197	8	LEVER—Alarm control switch cam lever
*XC40X198	22	CONTACT ASSEMBLY—Upper switch contact and spring with attached fibre arm
*XC40X202	5	SPACER BUSHING—Field core spacer at screw mounting to base plate
*XC40X252	26	WASHER—Alarm signal cam and gear friction washer
*XC40X275		SPACER BUSHING—Wake-up Manual switch control shaft bushing
*XC40X276	20	SPACER BUSHING—For time set shaft
XC40X277	30	SHAFT—Sleep control shaft and gear segment assembly
*XC44X38	2	MOTOR ROTOR ASSEMBLY—Cased rotor and pinion (60 cycles)
*XC45X69	11	MOTOR FIELD ASSEMBLY—Consists of: core, shading poles, and field coil (60 cycles)
*XC59X699	13	SHAFT ASSEMBLY—Wake-up Manual control shaft assembly (detent spring index type)
*XC59X723	13	SHAFT ASSEMBLY—Wake-up Manual control shaft assembly (cam index type)
*XC64X1		SCREW—Switch bracket and front plate mounting screws

* Parts used on previous receivers.

©John F. Rider

Compliments of www.nucow.com

MODELS 510, 511

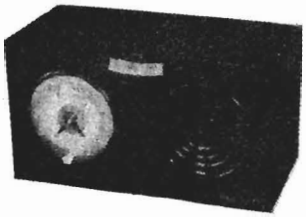

Model 510

Model 511

SPECIFICATIONS

CABINET	Model	510	511
	Composition	Brown plastic	Ivory plastic
	Height	$6\frac{1}{4}$ inches	
	Width	$5\frac{19}{32}$ inches	
	Length	$11\frac{3}{8}$ inches	
POWER SUPPLY	Voltage	105–120 volts	
	Frequency	60 cycles	
	Wattage	30 watts	
OPERATING FREQUENCIES	Broadcast Band	540–1600 kc	
	I-F Amplifier	455 kc	
POWER OUTPUT	Undistorted	1 watt	
	Maximum	1.75 watts	
LOUDSPEAKER	Type	Alnico 5 PM	
	Outside Cone Diameter	4 inches	
	Voice Coil Impedance (400 cycles)	3.5 ohms	
TUBE COMPLEMENT	Oscillator-Converter	12SA7	
	I-F Amplifier	12BA6	
	Detector and 1st Audio	12SQ7	
	Power Output	50C5	
	Rectifier	35W4	

GENERAL INFORMATION

The Models 510 and 511 are table model receivers providing reception on the Broadcast Band and incorporate as a special feature an electric time clock with wake-up alarm. A Beam-a-scope antenna is built in the radio providing good reception without an outside antenna.

RADIO CIRCUIT ALIGNMENT

EQUIPMENT REQUIRED

1. Test oscillator with tone modulation.
2. A-c output meter, $1\frac{1}{2}$ volts full scale.
3. Paper capacitor, 0.05 mf.
4. Loop (see explanation below).
5. Insulated screwdriver.
6. Isolation transformer.

PROCEDURE—GENERAL

1. With the tuning scale control wheel turned so that the tuning condenser plates are fully meshed, the index should read approximately $\frac{3}{16}$ inch to the right of the 500 kc scale calibration mark. If the reading is incorrect, remove the control wheel from the tuning condenser and replace for correct position. Do not attempt to correct the position by rotating the wheel on the shaft as this will cause the knob to slip.

2. For i-f alignment, it is necessary to remove the chassis from the cabinet.

3. Connect the output meter across the loudspeaker voice terminals.

4. Keep volume control at maximum and attenuate the test oscillator signal output so that the output meter reading never exceeds 1.0 volt.

5. Connect the capacitor as listed in column 2 between the output "High Side" of the test oscillator and the point of input specified. The oscillator output cable ground lead is connected to the receiver B−

ALIGNMENT CHART

Step	Connect Test Oscillator to	Test Osc. Setting	Dial Drum Setting	Adjust Trimmer for Max. Output
1	12BA6 grid (1) in series with 0.05 mf cap.	455 kc	Minimum capacity	2nd i-f trans. trimmers, C14 and C15.
2	12SA7 grid (8) in series with 0.05 mf. cap.			1st i-f trans. trimmer, C8 and C9.
3	Inductively coupled to radio loop.	1620 kc		C4 (oscillator)
4		1500 kc	Tune for maximum	C3 (antenna) (Rock-in)

6. For alignment of the oscillator and antenna trimmers, the input signal should be inductively coupled to the radio loop antenna, L1, by connecting a four-turn, six-inch diameter loop of bell wire across the signal generator output terminals, and then locating the loop to face the radio antenna loop about one foot away. To prevent possible errors in reference to previous signal measurement readings, the loop should not be changed with respect to the radio loop during any one set of adjustments.

STAGE GAIN AND VOLTAGE CHECKS

Trouble shooting is greatly enhanced by stage gain measurements which must be made by vacuum tube voltmeter or similar measuring instrument. The gain listed may have tolerances of ±20%. Use only low signal input so that the AVC is inoperative.

1. I-F STAGE GAINS

12SA7 Grid to 12BA6 Grid ..... 50@ 455 kc
12BA6 Grid to 12SQ7 Diode Plate ..... 50@ 455 kc

2. AUDIO GAINS

With the volume control (R11) at maximum, an input signal of 0.15 volts at 400 cycles across the control R11 will give approximately 0.5 watt output across the loudspeaker voice coil.

3. OSCILLATOR GRID BIAS

The d-c voltage developed across the oscillator grid leak (R1) averages 8.5 volts at 1000 kc, measured with V.T.V.M.

4. SOCKET VOLTAGES

The tube voltages are shown on Figure 3. They are taken from tube pins to B− unless specified otherwise. Great deviations of voltage values may help to localize defective components or tubes.

5. HUM

The hum voltage measured at the primary of the output transformer should not exceed 3mV volts. This measurement should be made with an a-c voltmeter of a sensitivity of 20,000 ohm volt in series with 0.5 mf. capacitor.

©John F. Rider

Compliments of www.nucow.com

MODELS 510, 511

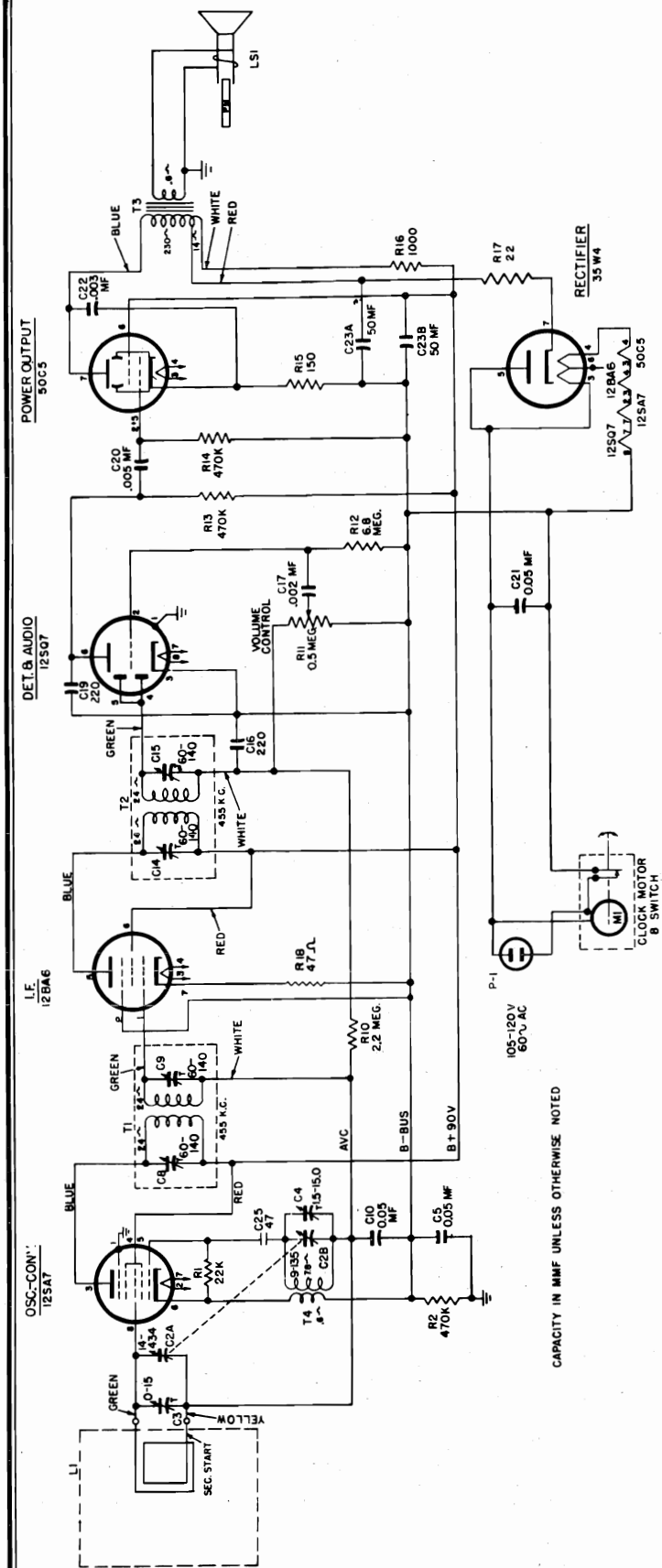

Fig. 1. Schematic Diagram, Models 510 and 511

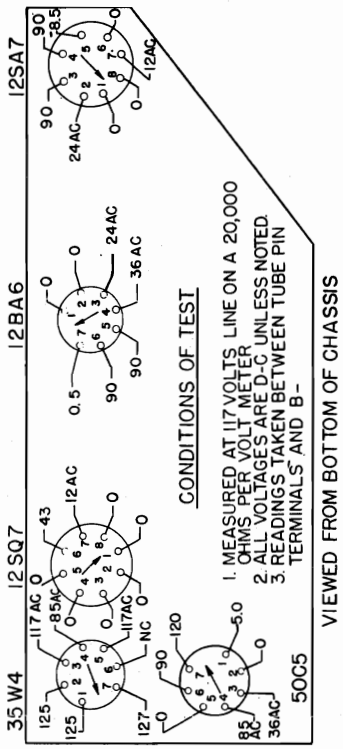

Fig. 3. Socket Voltage Diagram

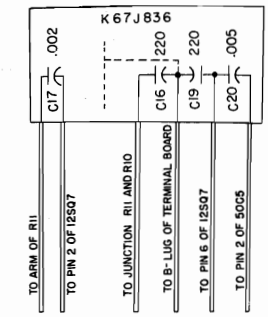

Fig. 4. Capacitor RC-3013 (K67J836)

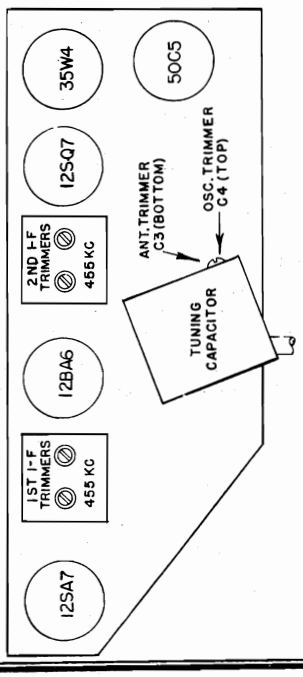

Fig. 2. Tube and Trimmer Location

©John F. Rider

Compliments of www.nucow.com

CLOCK SERVICE

Figure 5 shows clock parts referred to in the following paragraphs and the parts list.

CLOCK MOVEMENT DISASSEMBLY

1. Remove clock movement from case. When removing knobs, note that the Alarm-Set knob is a left-hand thread, while Alarm-Radio is a pull-off knob.
2. Remove Bezel, Hands and Dial Face.
3. Remove the motor assembly by removing two screws (A) and break two soldered joints on Field. The Field and Rotor Assembly (R) can now be removed. The Rotor is held by friction only to the Field.
4. Remove Switch Assembly (B) by removing two screws from base plate.
5. Remove Switch Shaft Assembly (C) and spacer.
6. Remove Alarm-Set Shaft Assembly (D) and spacer.
7. Remove the three front plate assembly screws that are located under the Dial Face and then remove Front Plate.
8. Remove Alarm Gear Sleeve Assembly (E), Hour Gear Sleeve Assembly (F), Minute Gear Sleeve Assembly (G), and Sweep Second Gear Shaft Assembly (H).
9. Remove Alarm Cam Gear Assembly (I) and Spring Washer (J).
10. Remove Alarm-Set Gear (K).
11. Remove Time-Set Gear and Shaft Assembly (L).
12. Remove Switch Cam Lever (M).

CLOCK MOVEMENT REASSEMBLY

Reassemble in the reverse order of disassembly, observing the following precautions:

1. The spring washer (J) should curve away from the gear when placed on the Alarm Cam Gear Assembly (I).
2. The Switch Cam Lever (M) fork must straddle the base plate post as shown in the illustration.
3. After reassembly of front plate, check the Sweep Second Gear (H) through the hole in the base plate to make sure it is free to turn.
4. Proceed with Alarm and Switch Adjustments as described below before installing hands.

ALARM AND SWITCH ADJUSTMENTS

1. Turn Alarm-Radio shaft to ALARM position.
2. Slowly rotate Time-Set shaft clockwise until the contacts of the Switch Assembly (B) close.
3. Replace Dial Face, Alarm Dial, the Minute, Hour and Second Hands. Set all Hands and Dial so that they indicate 12 o'clock. Make sure all Hands and Alarm Dial are tight on their respective shafts.
4. With Alarm-Set knob pulled out, continue to rotate Time-Set shaft clockwise and note that the vibrator arm (N) drops against field core approximately 7–10 minutes later.
5. Set alarm at some other selected position and make sure mechanism actuates within limits (±1 minute).
6. Check alarm tone of vibrator. This can be adjusted by either bending vibrator arm nearer or farther away from field core. Bend arm near anchor point.

CLEANING AND LUBRICATION

To clean, completely disassemble and clean all moving parts in carbon tetrachloride or some similar cleaner.

The inside of the sleeves and shaft surfaces may be cleaned of oxidized oil by rubbing with a fine grade of steel wool dampened in carbon tetrachloride.

Do not use too much oil and apply by means of a small wire (drop oiler). Too much oil collects dust and later oxidizes. Use only recommended clock oil, such as Nye's Celebrated Oil, which may be purchased from Wm. F. Nye Co., Inc., New Bedford, or equivalent.

CLOCK TROUBLES

1. Clock will not operate—Defective field coil, defective rotor, binding of parts.
2. Clock loses time—Binding parts, too little friction on minute hand sleeve assembly, defective rotor. Clock time-set shaft bent and rubs against hole in clock bracket.
3. Noisy Clock—Rotor defective, alarm armature improperly adjusted, loose parts, or binding of moving parts.

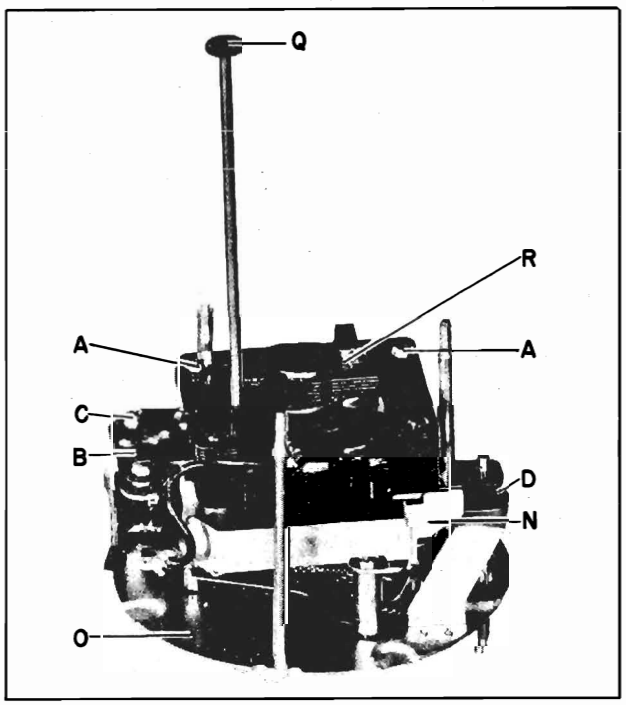

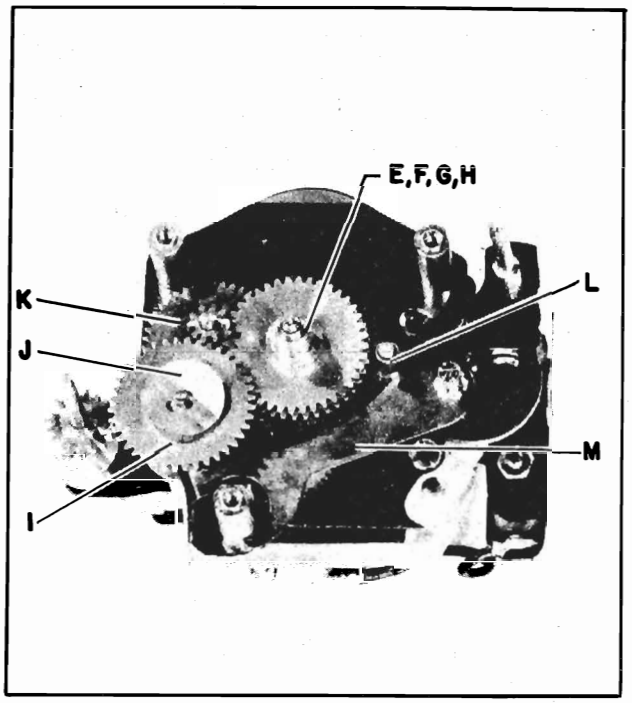

Fig. 5. Clock Part Identification

©John F. Rider

Compliments of www.nucow.com

MODELS 510, 511

MODEL 510 AND 511 REPLACEMENT PARTS

UNIVERSAL REPLACEMENT PARTS

Cat. No.	Symbol	Description
UCC-037	C22	CAPACITOR—.003 mf., 600 v., paper
*UCC-045	C5, C10, C11, C21	CAPACITOR—.05 mf., 600 v., paper
*UCC-630	C17, C20	CAPACITOR—.01 mf., 600 v., paper (may replace respective sections of RCW-3013)
UCG-020	C25	CAPACITOR—47 mmf., silver mica
*UCU-036	C16, C19	CAPACITOR—220 mmf., mica (may replace respective sections of RCW-3013)
*URD-009	R17	RESISTOR—22 ohms, ½ w., carbon
*URD-017	R18	RESISTOR—47 ohms, ½ w., carbon
*URD-029	R15	RESISTOR—150 ohms, ½ w., carbon
*URD-081	R1	RESISTOR—22,000 ohms, ½ w., carbon
*URD-113	R2, R13, R14	RESISTOR—470,000 ohms, ½ w., carbon
*URD-129	R10	RESISTOR—2.2 meg., ½ w., carbon
*URD-141	R12	RESISTOR—6.8 meg., ½ w., carbon
*URF-049	R16	RESISTOR—1000 ohms, 2 w., carbon
S400C	LS1	SPEAKER—4-in. PM speaker, less output transformer

SPECIALIZED REPLACEMENT PARTS

Cat. No.	Symbol	Description
*RAB-131	L1	BACK—Cabinet back cover (includes loop L1)
RAC-060		SHIELD—Bottom shield
*RAC-085		MOUNTING BRACKET—Metal back cover holds clock to cabinet
RAG-033		GRILLE CLOTH ASSEMBLY Model 510
RAG-034		GRILLE CLOTH ASSEMBLY —Model 511
RAU-336		CABINET — Brown plastic (Model 510)

SPECIALIZED REPLACEMENT PARTS (Cont'd)

Cat. No.	Symbol	Description
RAU-337		CABINET — White plastic (Model 511)
*RCC-074	C22	CAPACITOR—.003 mf., 600 v., paper
*RCE-116	C23A, C23B	CAPACITOR—50 mf., 150 v., 50 mf., 150 v., dry electrolytic
*RCT-045	C2A, C2B, C3, C4	CAPACITOR—Tuning capacitor (oscillator and r-f section) with trimmers
*RCW-3013	C16, C17, C19, C20	CAPACITOR—220 mmf., .002 mf., 220 mmf., .005 mf. (4 section ceramic) (see UCC-630, UCU-036)
*RDK-216		KNOB—Tuning dial wheel
*RDK-218		KNOB—Volume control knob
RHC-017		CLIP—Coil clip
RHC-024		CLIP—Condenser clip
*RHG-015		GROMMET—Cushion mounting for C2A, C2B
*RHI-010		STRAIN RELIEF
*RHJ-005		SPACER—Washer used with RHG-015
*RJC-004		CLIP—Loop connector clip
*RJS-092		SOCKET—Tube socket for 50C5, 35W4
*RJS-116		SOCKET—Tube socket for 12SA7
*RJS-117		SOCKET—Tube socket for 12SQ7, 35Z5-GT
*RJS-141		SOCKET—Tube socket for 12BA6
*RLC-090	T4	COIL—Oscillator coil
RMS-214		SPRING—Compression spring
*RRC-054	R11	POTENTIOMETER — 0.5 meg., volume control
*RTL-094	T1, C8, C9	TRANSFORMER — 1st I-F transformer
*RTL-095	T2, C14, C15	TRANSFORMER — 2nd I-F transformer
*RTO-036	T3	TRANSFORMER — Output transformer
RTO-091	T3	TRANSFORMER — Output transformer (bolt mount)
*RWL-009		CORD—Power cord (brown) for Model 510
*RWL-016		CORD—Power cord (white) for Model 511
*RZC-012	M1	CLOCK—60 cycle, 105–125 v., clock assembly

CLOCK REPLACEMENT PARTS LIST

MISCELLANEOUS

Cat. No.	Symbol	Description
XC3X49	Q	TIME SET SHAFT KNOB—Bronze
XC4X5		ALARM SET KNOB—Ivory
XC10X131	L	TIME SET GEAR AND SHAFT ASSEMBLY
XC11X11	D	ALARM SET SHAFT ASSEMBLY
RZH-003		SWEEP SECOND HAND
RZH-004		HOUR AND MINUTE HANDS
XC34X139	O	FRONTPLATE ASSEMBLY
RZA-004		ALARM DIAL
XC58X16		CRYSTAL—2 9/16 in., round
RZA-004		NUMERAL COLOR RING—Red
XC59X699	C	SWITCH SHAFT ASSEMBLY
XC59X716		SWITCH KNOB—Ivory
RZD-003		DIAL FACE—(On front plate)
RZA-005		NUMERAL RING—Bronze

CLOCK MOVEMENT

Cat. No.	Symbol	Description
*XC1X1	A	SCREW—Holds Field, No. 4-40X1 ⅛ in. R.H.
*XC1X2		No. 1204 LOCKWASHER
*XC1X6		SCREW No. 4-40 x ⅝ in. R.H.
*XC1X43		HEX NUT
*XC13X11	F	HOUR GEAR SLEEVE ASSEMBLY

CLOCK MOVEMENT (Cont'd)

Cat. No.	Symbol	Description
*XC14X15	G	MINUTE GEAR SLEEVE ASSEMBLY
*XC15X3	E	ALARM GEAR SLEEVE ASSEMBLY
*XC16X14	H	SWEEP SECOND GEAR SHAFT ASSEMBLY
*XC17X8	I	ALARM GEAR SHAFT ASSEMBLY
*XC35X39		BASEPLATE ASSEMBLY
*XC40X13		RIVET—Vibrator
*XC40X76		SWITCH ASSEMBLY—Consists of Contact Block (top), Contact Block (bottom), Contact Spring Insulator
*XC40X77	K	ALARM SET GEAR ASSEMBLY
*XC40X78	M	SWITCH CAM LEVER ASSEMBLY
*XC40X79		UPPER CONTACT SPRING ASSEMBLY
*XC40X80		LOWER CONTACT SPRING AND TIP ASSEMBLY
*XC40X202		SPREADER POST
*XC40X252	J	CAM GEAR SPRING WASHER
*XC40X260		SPACER—Switch shaft
*XC40X261		TIME SET SHAFT SPACER
*XC40X262		TIME SET SHAFT SPACER
*XC40X263		ALARM SHUT-OFF SPACER
*XC44X38		ROTOR UNIT—60 cycles
*XC45X69	R	FIELD COIL ASSEMBLY—60 cycles
*XC64X1		FRONTPLATE SCREW

*Used on other models.

©John F. Rider

Compliments of www.nucow.com

MODELS 515, 516, 517, 518

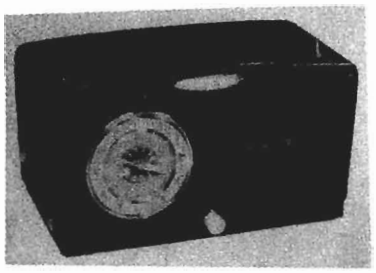

MODEL 515 (Brown Mottle)
MODEL 517 (Maroon)

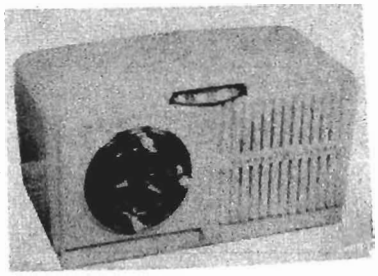

MODEL 516 (Ivory)
MODEL 518 (White)

SPECIFICATIONS

CABINET:

Height . . . . . $6\frac{3}{16}$ inches
Width . . . . . $11\frac{15}{16}$ inches
Depth . . . . . $4\frac{1}{4}$ inches

ELECTRICAL RATING (INPUT):

Voltage . . . . . 105-120 volts, a-c
Frequency . . . . . 60 cycles
Wattage . . . . . 30 watts

OPERATING FREQUENCIES:

Intermediate Frequency . . . . . 455 kc
Broadcast Band . . . . . 540-1600 kc

POWER OUTPUT:

Undistorted . . . . . 1 watt
Maximum . . . . . 1.75 watts

LOUDSPEAKER:

Type . . . . . Alnico 5 PM
Outside Cone Diameter 4-inch
Voice Coil Impedance (400 cycles) . . . . . 3.5 ohms

TUBE COMPLEMENT:

Oscillator-Converter . . . . . Type 12SA7
I-F Amplifier . . . . . Type 12BA6
Detector and 1st Audio . . . . . Type 12SQ7
Power Output . . . . . Type 50C5
Rectifier . . . . . Type 35W4

CAUTION: One side of the power line is connected to B—. Avoid any ground connections direct to B—. Use an isolating transformer when making service adjustments with the chassis removed from the cabinet.

GENERAL INFORMATION

The Models 515, 516, 517 and 518 are four-tube, plus rectifier tube, a-c/d-c superheterodyne receivers, employing a Beam-a-scope antenna. Special features include an electric time clock with wake-up alarm and sleep control switch. In addition, the timer receptacle at the rear of the receiver provides an outlet connection for external appliances which is controlled by the normal function of the alarm and sleep control mechanism of the clock. The radio OFF-ON switch adjacent to the timer outlet provides control of radio operation so that the radio receiver may be turned off if so desired while using the external appliance. When radio operation is to be resumed, this switch must be turned to the on position.

C16, C17, C19, AND C20

The lead identification for the four-section ceramic capacitor RCW-3013 (K67J836) can be observed from the illustration of Figure 1.

Should it become necessary to service this unit, either the defective section can be cut out of the circuit and replaced by an individual capacitor (see Parts Replacement List, items UCC-036, UCC-039 and UCU-1036), or a complete new four-section unit, RCW-3013, can be installed.

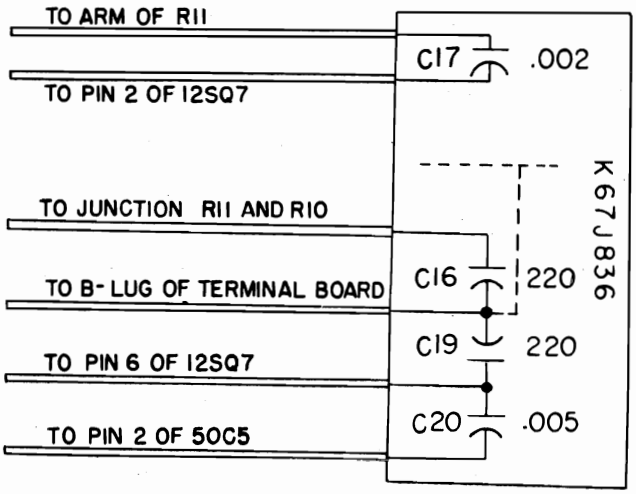

Fig. 1. Capacitor RCW-3013

STAGE GAIN AND VOLTAGE CHECKS

Stage gain measurements by vacuum tube voltmeter or similar measuring devices may be used to check circuit performance and isolate trouble. The gain values listed may have tolerances of 20%. Readings taken with low signal input so that AVC is not effective.

(1) I-F Stage Gains.

12SA7 Grid to 12BA6 Grid . . . . . 50 @ 455 kc
12BA6 Grid to 12SQ7 Diode Plate . . . . . 50 @ 455 kc

(2) Audio Gain.

0.15 volts at 400 cycles across the volume control (R11) with control set at maximum will give approximately ½-watt output across the loudspeaker, LS1, voice coil.

(3) Oscillator Grid Bias.

D-c voltage developed across the oscillator grid leak (R1) averages 8.5 volts at 1000 kc.

(4) Socket Pin Voltages.

Figure 3 shows voltages from all tube pins to B— unless otherwise specified. Voltage readings much higher or lower than those specified may help localize defective components or tubes.

©John F. Rider

Compliments of www.nucow.com

MODELS 515, 516, 517, 518

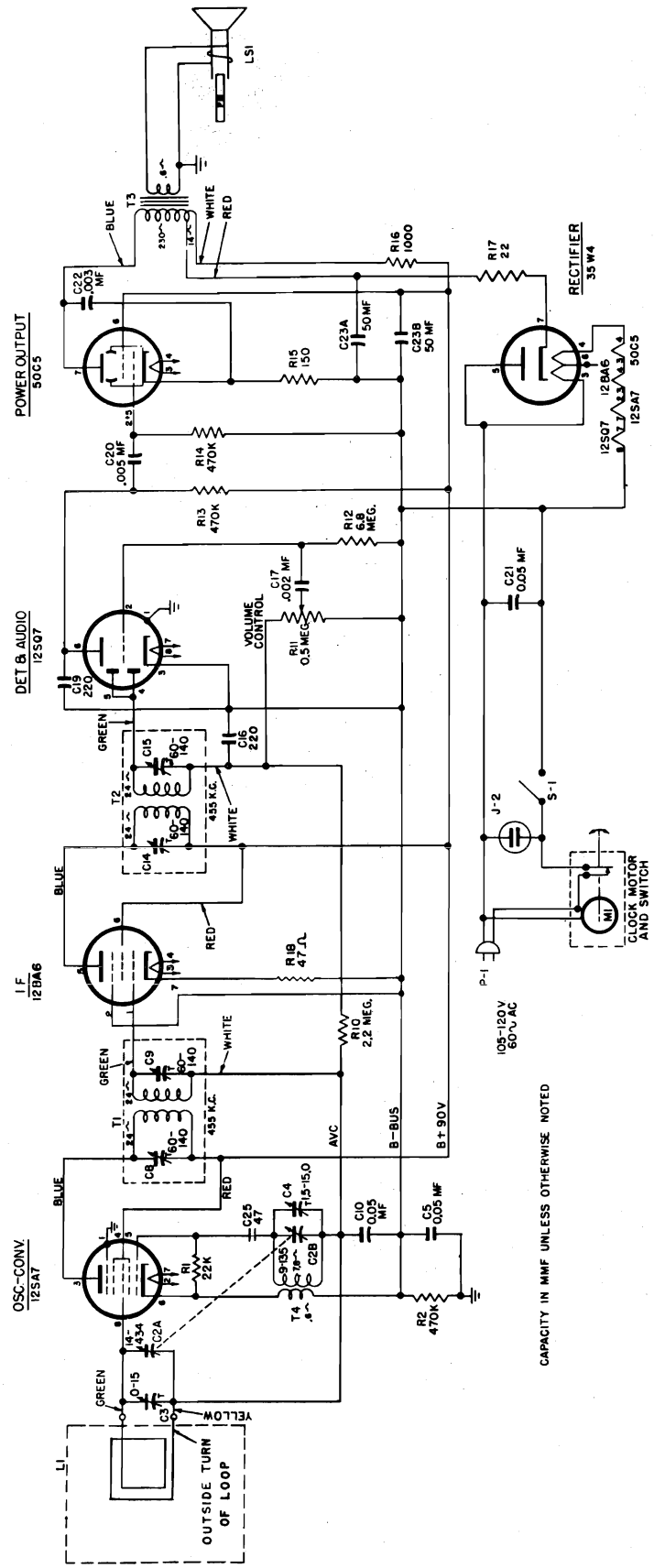

Fig. 2. Schematic Diagram

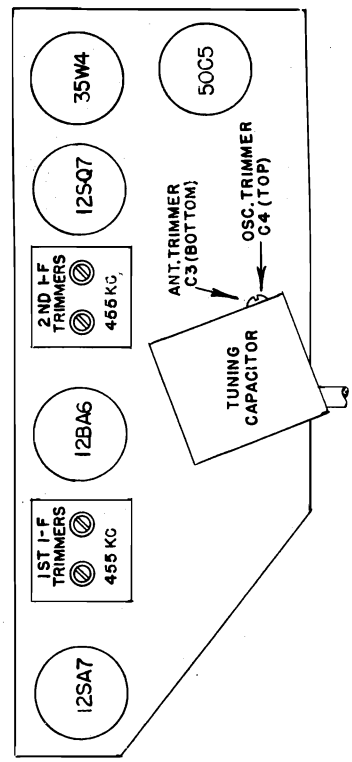

Fig. 4. Tube and Trimmer Location

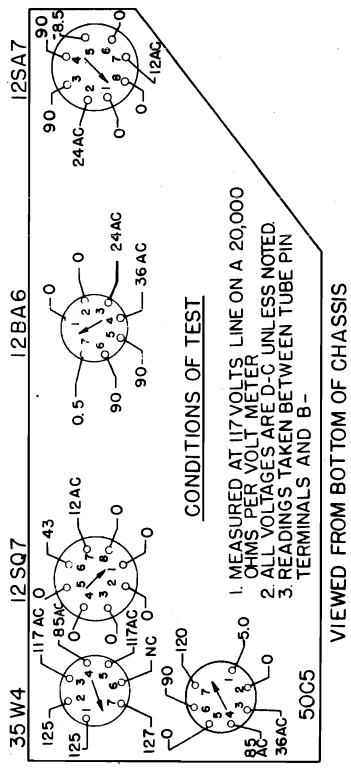

Fig. 3. Socket Voltages

©John F. Rider

Compliments of www.nucow.com

MODELS 515, 516, 517, 518

RADIO CIRCUIT ALIGNMENT

ALIGNMENT FREQUENCIES:

R-F ..... 1500 kc
R-F ..... 1620 kc
I-F ..... 455 kc

EQUIPMENT REQUIRED:

1. Test oscillator with tone modulation.
2. A-c output meter, 1½ volts full scale.
3. 0.05 mf. paper capacitor.
4. Loop. (See note 6.)
5. Insulated screwdriver.

PROCEDURE—GENERAL:

1. With the tuning scale control wheel turned so that the gang condenser plates are fully meshed, the index should read approximately $\frac{3}{16}$ inch to the right of the 550 kc scale calibration mark. If it does not, remove the control wheel from the gang condenser shaft and replace it for correct position. CAUTION: Do not attempt to correct the position by rotating the wheel on the shaft as this will cause the knob to slip.

2. For i-f alignment, it is necessary to remove the chassis from the cabinet.

3. Connect the output meter across the loudspeaker voice coil terminals.

4. Keep radio volume control at maximum and attenuate the test oscillator signal output so that the output meter reading never exceeds 1.0 volt.

5. Connect the capacitor as listed in column 2 between the output "High Side" of the test oscillator and the point of input specified. The oscillator output cable ground lead is connected to receiver chassis.

6. For alignment of the oscillator and antenna trimmers, the input signal should be inductively coupled to the radio loop antenna, L1, by connecting a four-turn, six-inch diameter loop of bell wire across the signal generator output terminals, and then locating the loop to face the radio antenna loop about one foot away. To prevent possible errors in reference to previous signal measurement readings, the loop with respect to the radio loop should not be changed during any one set of adjustments.

ALIGNMENT CHART

Step	Connect Test Oscillator to	Test Osc. Setting	Dial Drum Setting	Adjust Trimmers for Maximum Output
1	12BA6 grid (1) in series with 0.05 mf. cap.	455 kc	Minimum Capacity	2nd I-F trans. trimmers, C14 and C15
2	12SA7 grid (8) in series with 0.05 mf. cap.	455 kc	Minimum Capacity	1st I-F trans. trimmers, C8 and C9
3	Inductively coupled to radio loop	1620 kc	Minimum Capacity	C4 (oscillator)
4	Inductively coupled to radio loop	1500 kc	Tune for Maximum	C3 (antenna)

CLOCK SERVICE

Figures 5 and 6 show clock parts referred to in the following paragraphs and the parts list.

CLOCK MOVEMENT DISASSEMBLY

1. Remove clock movement from case. When removing knobs, note that the Alarm-Set knob is a left-hand thread, while Wake-Up Manual and Sleep are pull-off knobs.
2. Remove Bezel, Hands and Dial Faces.
3. Remove the motor assembly by removing two screws (3) and break two soldered joints on Field. The Field and Rotor Assembly (11 and 2) can now be removed. The Rotor is held by friction only, to the Field.
4. Remove Switch Assembly by removing two screws (12) from base plate.
5. Remove Switch Shaft Assembly (13) and spacer.
6. Remove Alarm-Set Shaft Assembly (6) and spacer.
7. Remove the three front plate assembly screws that are located under the Dial Face and then remove Front Plate.
8. Remove the following gear assemblies and control levers in the order listed below:

(a) Sweep Control Shaft and Segment Gear (30)
(b) Alarm Dial Gear (16)
(c) Hour Hand Gear (17)
(d) Alarm Signal Cam and Gear, and Friction Washer (27, 26)
(e) Sweep Control Switch Lever (29)
(f) Pinion Drive Gear Assembly (15) (drives Sleep Control Segment Gear)
(g) Alarm Control Switch Cam Lever (8)
(h) Time Set Shaft and Gear, and Spacer (14, 20)
(i) Drive Gear and Pinion Assembly (28)
(j) Minute Hand Gear (18)
(k) Sweep Second Hand Gear (19)

CLOCK MOVEMENT REASSEMBLY

Reassemble in the reverse order of disassembly, observing the following precautions:

1. The spring washer (26) should curve away from the gear when placed on the Alarm Cam Gear Assembly (27).
2. The Switch Cam Lever fork (8) must straddle the base plate post as shown in the illustration.
3. After reassembly of front plate, check the Sweep Second Gear (19) through the hole in the base plate to make sure it is free to turn.
4. Proceed with Alarm and Switch Adjustments as described below before installing hands.

ALARM AND SWITCH ADJUSTMENTS

1. Turn Wake-Up Manual shaft to WAKE UP position.
2. Slowly rotate Time Set shaft clockwise until the contacts 21 and 22 of the Switch Assembly close.
3. Replace Dial Face, Alarm Dial, the Minute, Hour and Second Hands. Set all Hands so that they indicate 12 o'clock. Set figure 12 of the alarm dial to index with the smaller pointer of the hour hand. Make sure all Hands and Alarm Dial are tight on their respective shafts.
4. With Alarm Set knob pulled out, continue to rotate Time Set shaft clockwise and note that the Alarm vibrator arm drops against field core approximately 7–10 minutes later.
5. Set alarm at some other selected position and make sure mechanism actuates within limits (±1 minute).
6. Check alarm tone of vibrator. This can be adjusted by either bending vibrator arm nearer or farther away from field core. Bend arm near anchor point.

CLEANING AND LUBRICATION

To clean, completely disassemble and clean all moving parts in carbon tetrachloride or some similar cleaner.

The inside of the sleeves and shaft surfaces may be cleaned of oxidized oil by rubbing with a fine grade of steel wool dampened in carbon tetrachloride.

Do not use too much oil and apply by means of a small wire (drop oiler). Too much oil collects dust and later oxidizes. Use only recommended clock oil, such as Nye's Celebrated Oil which may be purchased from Wm. F. Nye Co., Inc., New Bedford, or equivalent.

CLOCK TROUBLES

1. Clock will not operate—Defective field coil, defective rotor, binding of parts.
2. Clock loses time—Binding parts, too little friction on minute hand sleeve assembly, defective rotor. Clock time set shaft bends and rubs against hole in clock bracket.
3. Noisy Clock—Rotor defective, alarm armature improperly adjusted, loose parts, or binding of moving parts.

©John F. Rider

Compliments of www.nucow.com

MODELS 515,
516, 517, 518

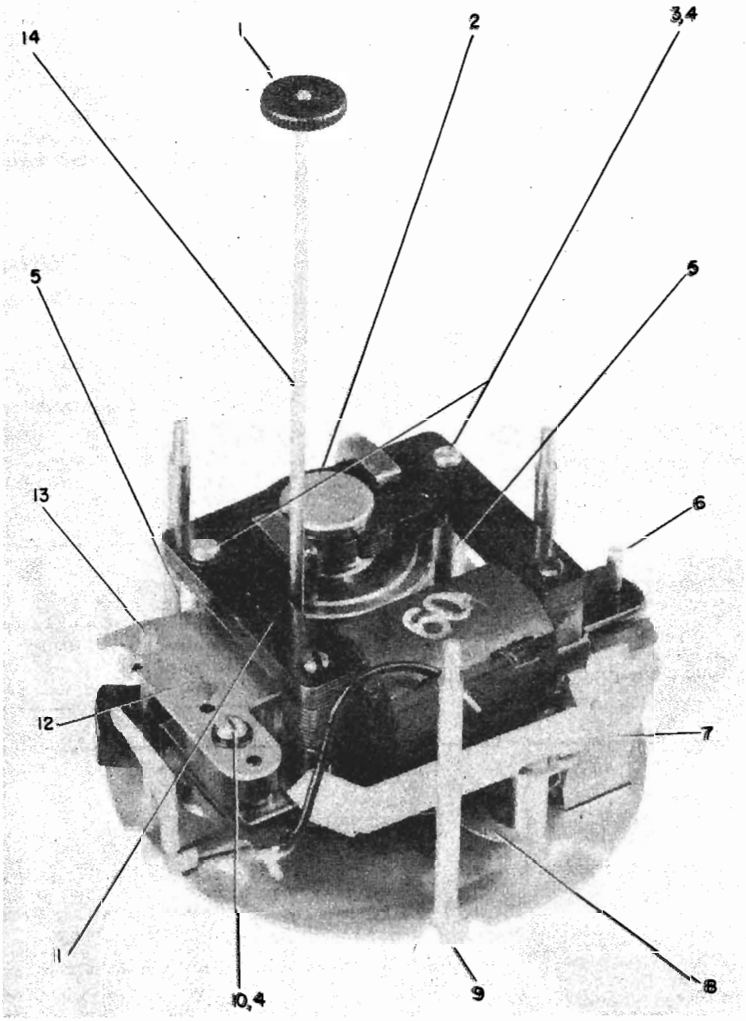

Fig. 5. Back View of Clock

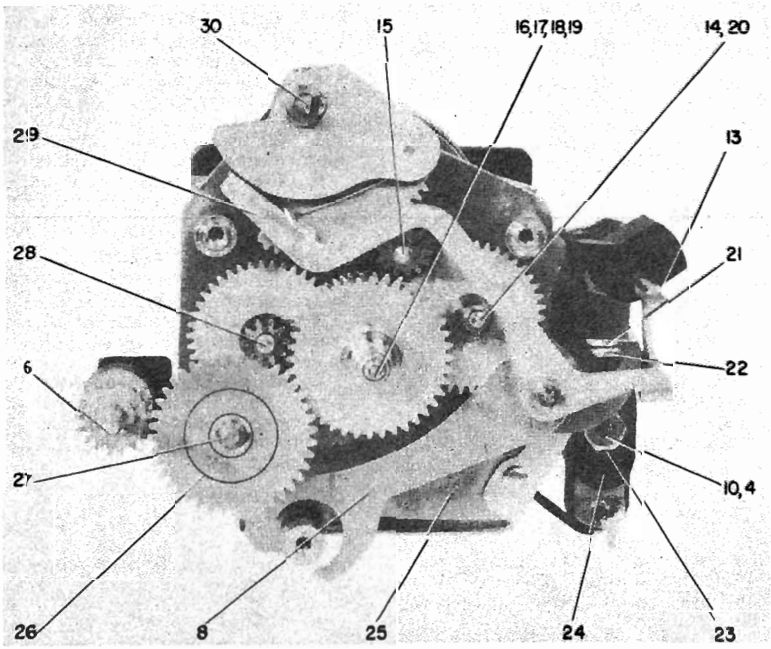

Fig. 6. Front View of Clock, Front Plate Removed

©John F. Rider

Compliments of www.nucow.com

MODELS 515, 516, 517, 518

REPLACEMENT PARTS LIST—MODELS 515, 516, 517 AND 518

Cat. No.	Symbol	Description
UNIVERSAL RADIO PARTS		
*UCC-036	C17	CAPACITOR—.002 mf., 600 v., paper (see paragraph, page 5)
*UCC-037	C22	CAPACITOR—.003 mf., 600 v., paper
*UCC-039	C20	CAPACITOR—.005 mf., 600 v., paper, (see paragraph, page 5)
*UCC-045	C5, C10, C21	CAPACITOR—.05 mf., 600 v., paper
*UCG-1020	C25	CAPACITOR—47 mmf., silver mica
*UCU-1036	C16, C19	CAPACITOR—220 mmf., mica (see paragraph, page 5)
*URD-009	R17	RESISTOR—22 ohms, ½ w., carbon
*URD-017	R18	RESISTOR—47 ohms, ½ w., carbon
*URD-029	R15	RESISTOR—150 ohms, ½ w., carbon
*URD-081	R1	RESISTOR—22,000 ohms, ½ w., carbon
*URD-113	R2, R13, R14	RESISTOR—470,000 ohms, ½ w., carbon
*URD-129	R10	RESISTOR—2.2 meg., ½ w., carbon
*URD-141	R12	RESISTOR—6.8 meg., ½ w., carbon
*URF-049	R16	RESISTOR—1000 ohms, 2 w., carbon
SPECIALIZED RADIO PARTS		
RAB-130		CABINET BACK—includes antenna loop, L1
*RAC-060		BOTTOM SHIELD—Metal plate, covers bottom of chassis
RAC-085		CLOCK MOUNTING BRACKET ASSEMBLY—Clock back cover
RAG-033		GRILLE CLOTH ASSEMBLY—For speaker grille on models 515, 517
RAG-034		GRILLE CLOTH ASSEMBLY—For speaker grille on Model 516
RAG-035		GRILLE CLOTH ASSEMBLY—For speaker grille on Model 518
RAU-338		CABINET—Model 515 (brown)
RAU-339		CABINET—Model 516 (ivory)
RAU-340		CABINET—Model 517 (maroon)
RAU-341		CABINET—Model 518 (white)
RCE-116	C23, A & B	CAPACITOR—50–50 mf., 150 v., electrolytic
RCT-045		CAPACITOR—(420–126 mmf.) tuning
*RCW-3013	C16, C17, C19, C20	CAPACITOR—220 mmf., .002 mf., 220 mmf., .005 mf., Ceramic (bullplate)
RDK-215		KNOB—Volume control—For Model 518
*RDK-217		KNOB—Dial tuning—For Models 515, 516, 517
*RDK-218		KNOB—Volume control—For Models 516, 517, 518
RDK-219		KNOB—Dial tuning—For Model 518
*RHC-017		COIL CLIP—For oscillator coil
*RHC-024		CONDENSER CLIP—For mounting electrolytic, C23
*RHG-015		GROMMET—Tuning capacitor mounting
*RHI-010		STRAIN RELIEF—Grommet in chassis for power cord
*RHJ-005		SPACER—Tuning capacitor mounting
*RHS-043		BRACKET—For receptacle J2 and switch S1
*RJC-004		CLIP—Loop connector lead clip
*RJJ-008	J2	RECEPTACLE—Appliance outlet (rear of receiver)
*RJS-092		TUBE SOCKET—For 50C5, 35W4
*RJS-116		TUBE SOCKET—For 12SA7
*RJS-117		TUBE SOCKET—For 12SQ7
RJS-141		TUBE SOCKET—For 12BA6 (7 Pin)
*RLC-090	T4	OSCILLATOR COIL
*RMS-214		SPRING CLIP—Locks drum dial to shaft
*RRC-054	R11	POTENTIOMETER—0.5 meg., volume control
*RSW-067	S1	SWITCH—ON-OFF switch
*RTL-094	T1	TRANSFORMER—1st I.-F.
*RTL-095	T2	TRANSFORMER—2nd I.-F.
RTO-036	T3	TRANSFORMER—Output transformer
*RWL-009		CORD SET—(brown) for Models 515, 517
*RWL-016		CORD SET—(ivory) for Model 516
RWL-024		CORD SET—(white) for Model 518
*RZC-009		CLOCK—60 cycles, 105-125 v., clock assembly for Models 515, 516, 517
*RZC-011		CLOCK—60 cycles, 105-125 v., clock assembly for Model 518
*S400C		SPEAKER—4" PM loudspeaker
†MISCELLANEOUS CLOCK PARTS		
*XC3X36	1	KNOB—Time set shaft knob (bronze)
*XC4X5		KNOB—Alarm set knob (ivory)
*XC31X26		HAND—Sweep second hand (Model 515, 516, 517)
*XC32X199		HANDS—Hour and minute hands (luminous) (Model 515, 516, 517)
*XC53X31		BEZEL—Outer mounting rim (Model 518)
*XC53X117		BEZEL—Numeral ring (gold finish) (Model 515, 516, 517)
*XC55X15		DIAL—Alarm dial scale
*XC58X16		CRYSTAL—Glass crystal
*XC59X247		RING—Color ring for numeral bezel (Model 515, 516, 517)
MISCELLANEOUS CLOCK PARTS (Cont'd)		
*XC59X716		KNOB—Wake-up Manual and Sleep control knob (ivory)
*XC61X937		DIAL—Clock dial scale (luminous) (Model 515, 516, 517)
*¶RZA-001		BEZEL—Outer mounting rim (Model 518)
*¶RZA-002		BEZEL—Numeral ring (gold finish) (Model 518)
*¶RZA-003		RING—Color ring for numeral bezel (Model 518)
*¶RZD-001		DIAL—Clock dial scale (luminous) (Model 518)
*¶RZH-001		HAND—Sweep second hand (Model 518)
*¶RZH-002		HANDS—Hour and minute hands (Model 518)
†CLOCK MOVEMENT PARTS		
*XC1X1	3	SCREW—Holds field core to baseplate, #4-40 x 1⅛" long, round head
*XC1X2	4	LOCKWASHER—Under screw head of switch assembly mounting screw and field core mounting
*XC1X6	10	SCREW—Used to assemble switch assembly to switch bracket
*XC1X43	23	HEX NUT—For screw mounting switch assembly to switch bracket
*XC10X141	14	SHAFT ASSEMBLY—Time set shaft and gear assembly
*XC11X11	6	SHAFT ASSEMBLY—Alarm set shaft and gear assembly
*XC13X11	17	GEAR ASSEMBLY—Hour hand gear and sleeve assembly
*XC14X32	18	GEAR ASSEMBLY—Minute hand friction gear, pinion gear and sleeve assembly
XC15X3	16	GEAR ASSEMBLY—Alarm dial gear and sleeve assembly
*XC16X14	19	GEAR ASSEMBLY—Sweep second hand gear and shaft assembly
*XC17X8	27	GEAR AND CAM—Alarm signal cam and gear assembly
*XC34X173	9	FRONT PLATE ASSEMBLY—Complete with case studs and alarm set shaft spring (7)
*XC35X93	25	BASE PLATE AND BACK GEAR—Base plate assembled complete with studs, back gear and pinion, and vibrator
*XC40X76	24	SWITCH INSULATOR ASSEMBLY—Consists of: two plastic and one fiber switch contact spring spacers
*XC40X77	28	GEAR AND SPRING ASSEMBLY—Drives alarm dial gear and hour hand gear (complete with pinion and shaft, pinion and gear, spring, washers and retaining clip)
*XC40X80	21	CONTACT ASSEMBLY—Lower switch contact and spring
*XC40X185		SPRING—Switch control shaft index spring (for cam indexed control shafts)
*XC40X194	29	LEVER—Sleep control switch lever
*XC40X196	15	GEAR AND SPRING ASSEMBLY—Pinion drive for sleep control segment gear (consists of pinion gear, pinion gear and shaft, spring, washers, and retaining clip)
*XC40X197	8	LEVER—Alarm control switch cam lever
*XC40X198	22	CONTACT ASSEMBLY—Upper switch contact and spring with attached fiber arm
*XC40X202	5	SPACER BUSHING—Field core spacer at screw mounting to base plate
*XC40X252	26	WASHER—Alarm signal cam and gear friction washer
*XC40X275		SPACER BUSHING—Wake-up Manual switch control shaft bushing
*XC40X276	20	SPACER BUSHING—For time set shaft
XC40X277	30	SHAFT—Sleep control shaft and gear segment assembly
*XC44X38	2	MOTOR ROTOR ASSEMBLY—Cased rotor and pinion (60 cycles)
*XC45X69	11	MOTOR FIELD ASSEMBLY—Consists of: core, shading poles, and field coil (60 cycles)
*XC59X699	13	SHAFT ASSEMBLY—Wake-up Manual Control shaft assembly (detent spring index type)
*XC59X723	13	SHAFT ASSEMBLY—Wake-up Manual control shaft assembly (cam index type)
*XC64X1		SCREW—Switch bracket and front plate mounting screws

* Parts used on previous receivers.

¶ These are temporary Cat. No. assignments to be superseded by regular Cat. No. at a later date.

©John F. Rider

Compliments of www.nucow.com

MODELS 521, 522

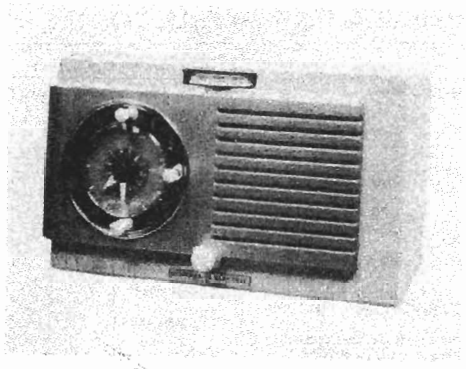

SPECIFICATIONS

CABINET

Model	521	522
Color	Dark Mahogany	Blond Mahogany
Height	6 3/16 in.	6 3/16 in.
Width	10 1/2 in.	10 1/2 in.
Depth	6 in.	6 in.

ELECTRICAL RATING (INPUT):

Voltage ..... 105–120 volts, a-c
Frequency ..... 60 cycles
Wattage ..... 30 watts

OPERATING FREQUENCIES:

Intermediate Frequency ..... 455 kc
Broadcast Band ..... 540–1600 kc

POWER OUTPUT:

Undistorted ..... 1 watt
Maximum ..... 1.75 watts

LOUDSPEAKER:

Type ..... Alnico 5 PM
Outside Cone Diameter 4-inch
Voice Coil Impedance (400 cycles) ..... 3.5 ohms

TUBE COMPLEMENT:

Oscillator-Converter ..... Type 12SA7
I-F Amplifier ..... Type 12BA6
Detector and 1st Audio ..... Type 12SQ7
Power Output ..... Type 50C5
Rectifier ..... Type 35W4

CAUTION: One side of the power line is connected to B—. Avoid any ground connections direct to B—. Use an isolating transformer when making service adjustments with the chassis removed from the cabinet.

GENERAL INFORMATION

*The Models 521 and 522 are four-tube, plus rectifier tube, a-c/d-c superheterodyne receivers, employing a Beam-a-scope antenna. Special features include an electric time clock with wake-up alarm and sleep control switch. In addition, the timer receptacle at the rear of the receiver provides an outlet connection for external appliances which is controlled by the normal function of the alarm and sleep control mechanism of the clock. The radio OFF-ON switch adjacent to the timer outlet provides control of radio operation so that the radio receiver may be turned off if so desired while using the external appliance. When radio operation is to be resumed, this switch must be turned to the on position.

RADIO CIRCUIT ALIGNMENT

ALIGNMENT FREQUENCIES:

R-F ..... 1500 kc
R-F ..... 1620 kc
I-F ..... 455 kc

EQUIPMENT REQUIRED:

1. Test oscillator with tone modulation.
2. A-c output meter, 1 1/2 volts full scale.
3. 0.05 mf. paper capacitor.
4. Loop. (See note 6.)
5. Insulated screwdriver.

PROCEDURE—GENERAL:

1. With the tuning scale control wheel turned so that the gang condenser plates are fully meshed, the index should read approximately 3/16 inch to the right of the 550 kc scale calibration mark. If it does not, remove the control wheel from the gang condenser shaft and replace it for correct position. CAUTION: Do not attempt to correct the position by rotating the wheel on the shaft as this will cause the knob to slip.
2. For i-f alignment, it is necessary to remove the chassis from the cabinet.
3. Connect the output meter across the loudspeaker voice coil terminals.
4. Keep radio volume control at maximum and attenuate the test oscillator signal output so that the output meter reading never exceeds 1.0 volt.
5. Connect the capacitor as listed in column 2 between the output "High Side" of the test oscillator and the point of input specified. The oscillator output cable ground lead is connected to receiver chassis.
6. For alignment of the oscillator and antenna trimmers, the input signal should be inductively coupled to the radio loop antenna, L1, by connecting a four-turn, six-inch diameter loop of bell wire across the signal generator output terminals, and then locating the loop to face the radio antenna loop about one foot away. To prevent possible errors in reference to previous signal measurement readings, the loop with respect to the radio loop should not be changed during any one set of adjustments.

ALIGNMENT CHART

Step	Connect Test Oscillator to	Test Osc. Setting	Dial Drum Setting	Adjust Trimmers for Maximum Output
1	12BA6 grid (1) in series with 0.05 mf. cap.	455 kc	Minimum Capacity	2nd I-F trans. trimmers, C14 and C15
2	12SA7 grid (8) in series with 0.05 mf. cap.	455 kc	Minimum Capacity	1st I-F trans. trimmers, C8 and C9
3	Inductively coupled to radio loop	1620 kc	Minimum Capacity	C4 (oscillator)
4	Inductively coupled to radio loop	1500 kc	Tune for Maximum	C3 (antenna)

STAGE GAIN AND VOLTAGE CHECKS

Stage gain measurements by vacuum tube voltmeter or similar measuring devices may be used to check circuit per-

©John F. Rider

Compliments of www.nucow.com

formance and isolate trouble. The gain values listed may have tolerances of 20%. Readings taken with low signal input so that AVC is not effective.

(1) I-F Stage Gains.
12SA7 Grid to 12BA6 Grid.....50 @ 455 kc
12BA6 Grid to 12SQ7 Diode Plate.....50 @ 455 kc

(2) Audio Gain.
0.15 volts at 400 cycles across the volume control (R11) with control set at maximum will give approximately ½-watt output across the loudspeaker, LS1, voice coil.

(3) Oscillator Grid Bias.
D-c voltage developed across the oscillator grid leak (R1) averages 8.5 volts at 1000 kc.

(4) Socket Pin Voltages.
Figure 2 shows voltages from all tube pins to B− unless otherwise specified. Voltage readings much higher or lower than those specified may help localize defective components or tubes.

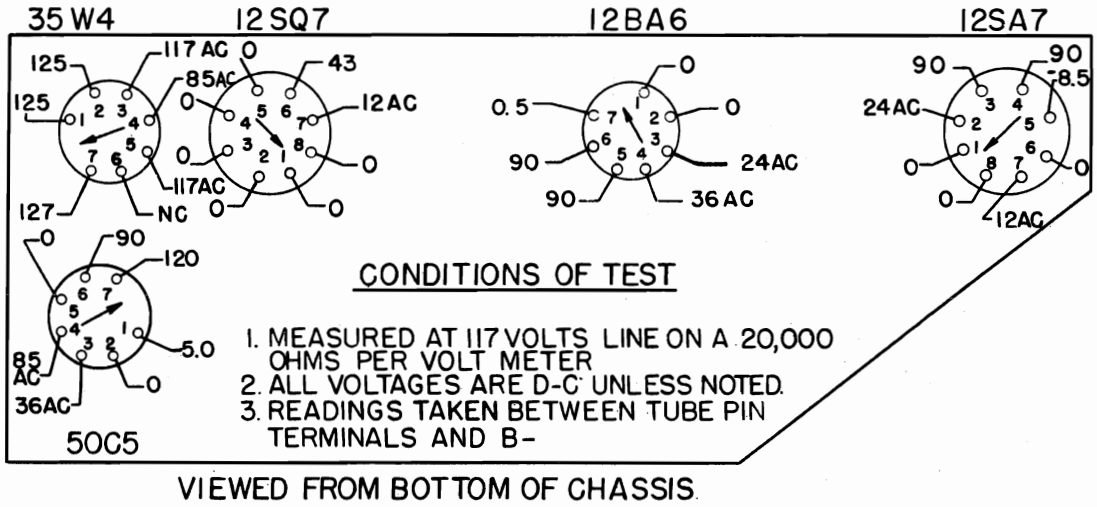

Fig. 2. Socket Voltages

CLOCK SERVICE

Figures 3 and 4 show clock parts referred to in the following paragraphs and the parts list.

CLOCK MOVEMENT DISASSEMBLY

1. Remove clock movement from case. When removing knobs, note that the Alarm-Set knob is a left-hand thread, while Wake-Up Manual and Sleep are pull-off knobs.
2. Remove Bezel, Hands and Dial Faces.
3. Remove the motor assembly by removing two screws (3) and break two soldered joints on Field. The Field and Rotor Assembly (11 and 2) can now be removed. The Rotor is held by friction only, to the Field.
4. Remove Switch Assembly (12) by removing two screws from base plate.
5. Remove Switch Shaft Assembly (13) and spacer.
6. Remove Alarm-Set Shaft Assembly (6) and spacer.
7. Remove the three front plate assembly screws that are located under the Dial Face and then remove Front Plate.
8. Remove the following gear assemblies and control levers in the order listed below:
   (a) Sweep Control Shaft and Segment Gear (30)
   (b) Alarm Dial Gear (16)
   (c) Hour Hand Gear (17)
   (d) Alarm Signal Cam and Gear, and Friction Washer (27, 26)
   (e) Sweep Control Switch Lever (29)
   (f) Pinion Drive Gear Assembly (15) (drives Sleep Control Segment Gear)
   (g) Alarm Control Switch Cam Lever (8)
   (h) Time Set Shaft and Gear, and Spacer (14, 20)
   (i) Drive Gear and Pinion Assembly (28)
   (j) Minute Hand Gear (18)
   (k) Sweep Second Hand Gear (19)

CLOCK MOVEMENT REASSEMBLY

Reassemble in the reverse order of disassembly, observing the following precautions:

1. The spring washer (26) should curve away from the gear when placed on the Alarm Cam Gear Assembly (27).
2. The Switch Cam Lever fork (8) must straddle the base plate post as shown in the illustration.
3. After reassembly of front plate, check the Sweep Second Gear (19) through the hole in the base plate to make sure it is free to turn.
4. Proceed with Alarm and Switch Adjustments as described below before installing hands.

ALARM AND SWITCH ADJUSTMENTS

1. Turn Wake-Up Manual shaft to WAKE UP position.
2. Slowly rotate Time Set shaft clockwise until the contacts 21 and 22 of the Switch Assembly close.
3. Replace Dial Face, Alarm Dial, the Minute, Hour and Second Hands. Set all Hands so that they indicate 12 o'clock. Set figure 12 of the alarm dial to index with the smaller pointer of the hour hand. Make sure all Hands and Alarm Dial are tight on their respective shafts.
4. With Alarm Set knob pulled out, continue to rotate Time Set shaft clockwise and note that the Alarm vibrator arm drops against field core approximately 7–10 minutes later.
5. Set alarm at some other selected position and make sure mechanism actuates within limits (±1 minute).
6. Check alarm tone of vibrator. This can be adjusted by either bending vibrator arm nearer or farther away from field core. Bend arm near anchor point.

CLEANING AND LUBRICATION

To clean, completely disassemble and clean all moving parts in carbon tetrachloride or some similar cleaner.

The inside of the sleeves and shaft surfaces may be cleaned of oxidized oil by rubbing with a fine grade of steel wool dampened in carbon tetrachloride.

Do not use too much oil and apply by means of a small wire (drop oiler). Too much oil collects dust and later oxidizes. Use only recommended clock oil, such as Nye's Celebrated Oil which may be purchased from Wm. F. Nye Co., Inc., New Bedford, or equivalent.

CLOCK TROUBLES

1. Clock will not operate—Defective field coil, defective rotor, binding of parts.
2. Clock loses time—Binding parts, too little friction on minute hand sleeve assembly, defective rotor. Clock time set shaft bends and rubs against hole in clock bracket.
3. Noisy Clock—Rotor defective, alarm armature improperly adjusted, loose parts, or binding of moving parts.

©John F. Rider

Compliments of www.nucow.com

MODELS 521, 522

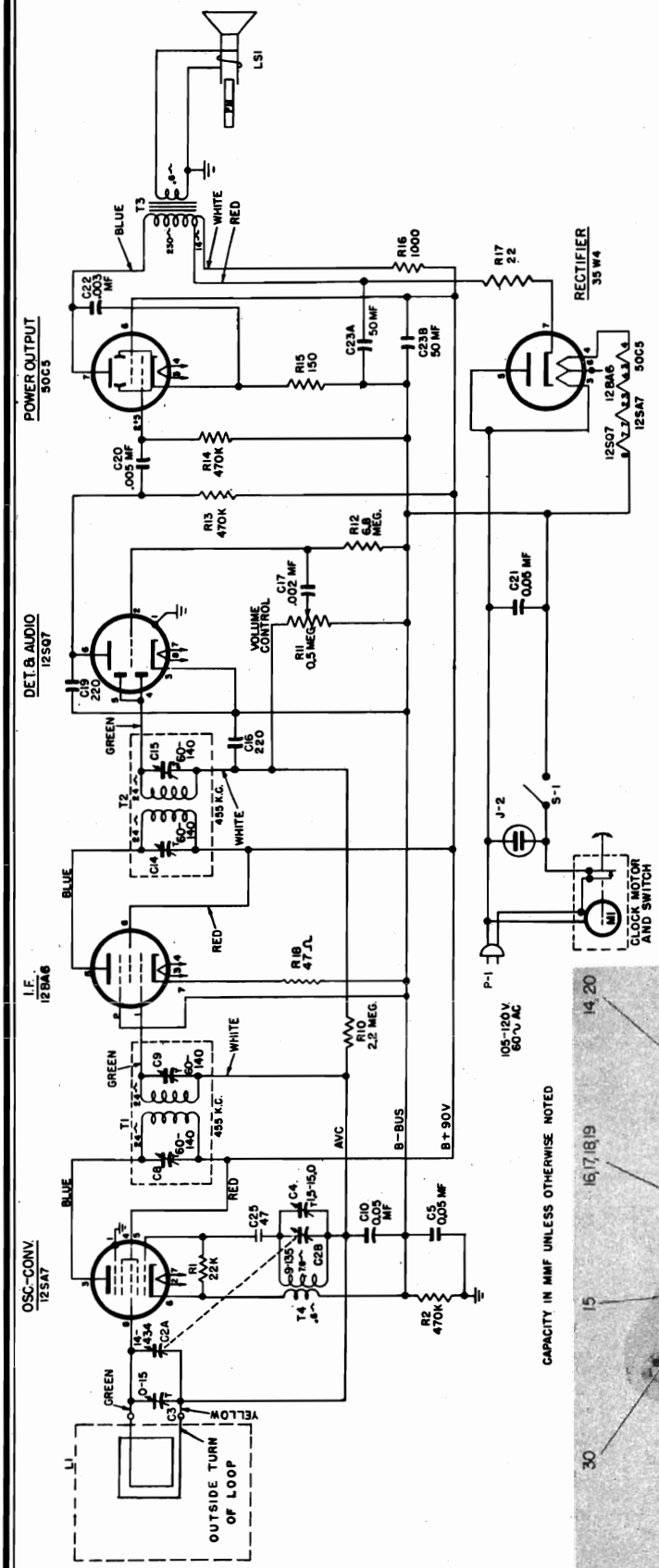

Fig. 1. Schematic Diagram

NOTE: Loop connections are: green lead to inside turn of antenna loop, yellow lead to outside turn.

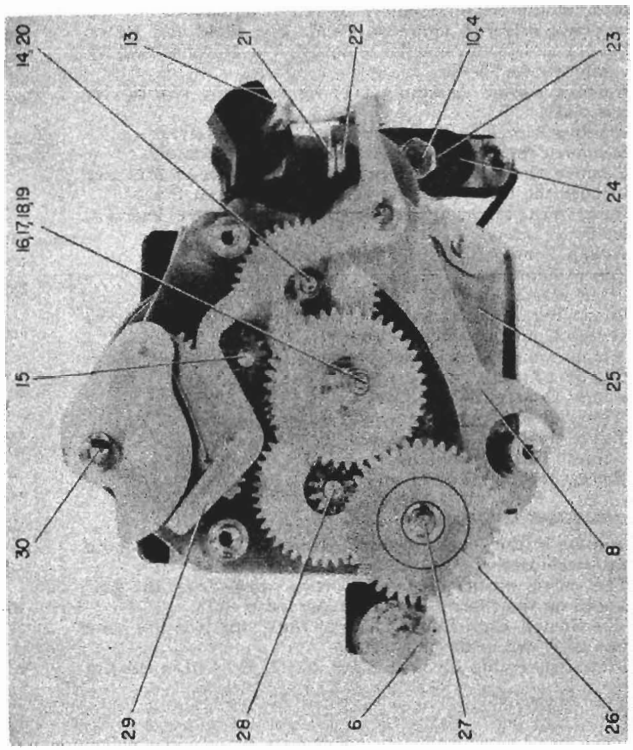

Fig. 4. Front View of Clock, Front Plate Removed

©John F. Rider

Compliments of www.nucow.com

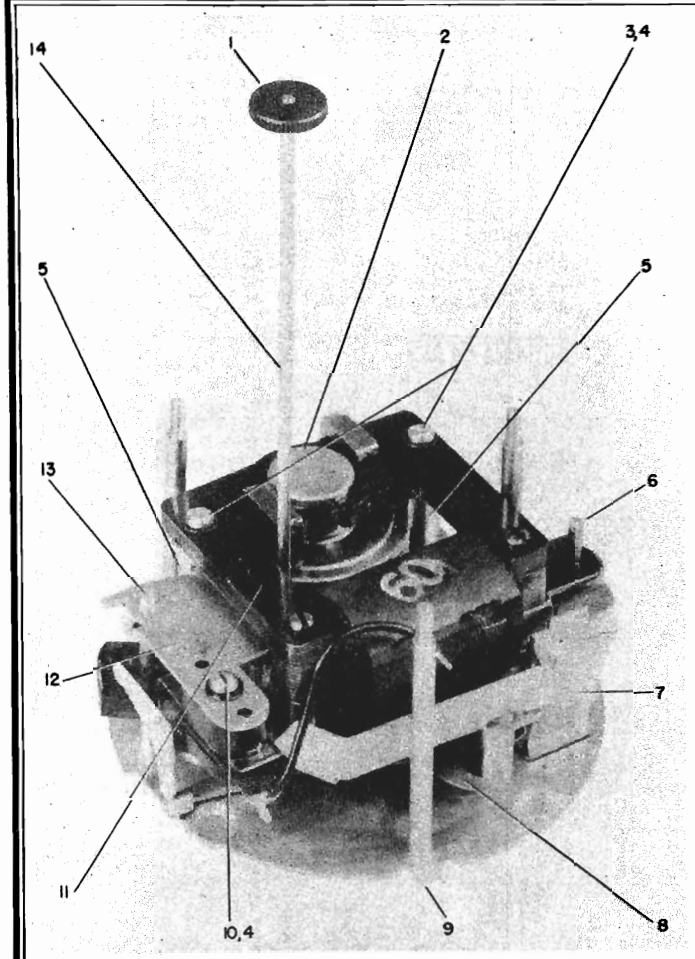

Fig. 3. Back View of Clock

C16, C17, C19, AND C20

The lead identification for the four-section ceramic capacitor RCW-3013 (K67J836) can be observed from the illustration of Figure 6.

Should it become necessary to service this unit, either the defective section can be cut out of the circuit and replaced by an individual capacitor (see Parts Replacement List, items UCC-036, UCU-039 and UCU-1036), or a complete new four-section unit, RCW-3013, can be installed.

Fig. 5. Capacitor RCW-3013 (K67J836)

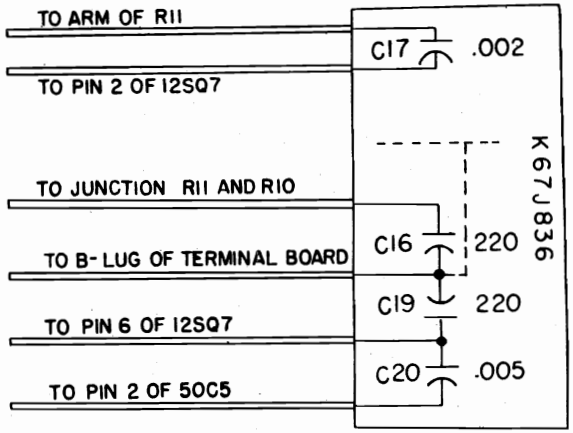

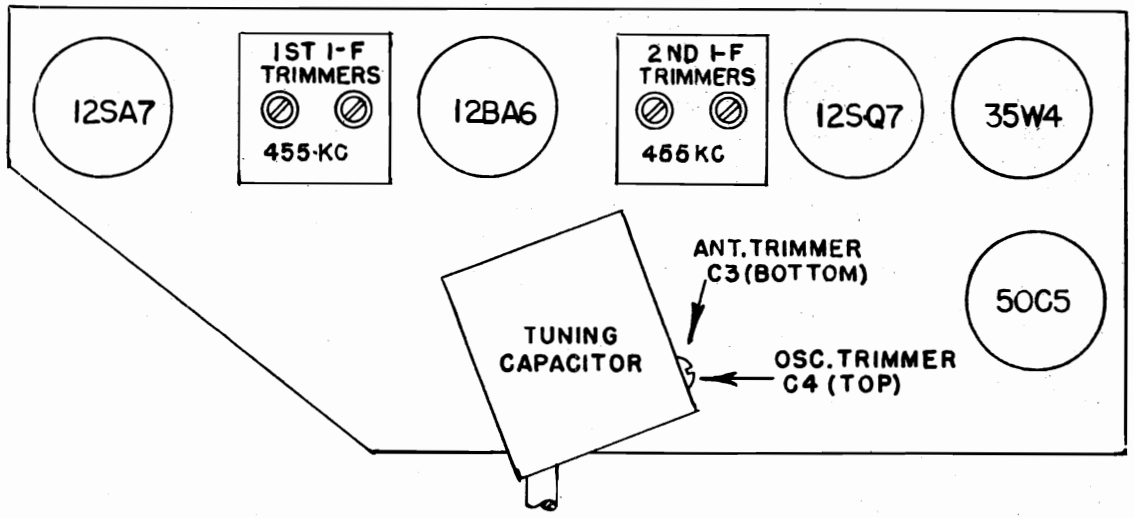

Fig. 6. Tube and Trimmer Location

© John F. Rider

Compliments of www.nucow.com

MODELS 521, 522

RADIO REPLACEMENT PARTS LIST

Cat. No.	Symbol	Description
		UNIVERSAL REPLACEMENT PARTS
*UCC-036	C17	CAPACITOR—.002 mf., 600 v., paper
*UCC-039	C20	CAPACITOR—.005 mf., 600 v., paper
*UCC-045	C5, 10, 21	CAPACITOR—.05 mf., 600 v., paper (will replace respective sections of RCW-3013).
*UCU-1036	C16, 19	CAPACITOR—220 mmf., mica
*URD-009	R17	RESISTOR—22 ohms, ½ w., carbon
*URD-017	R18	RESISTOR—47 ohms, ½ w., carbon
*URD-029	R15	RESISTOR—150 ohms, ½ w., carbon
*URD-081	R1	RESISTOR—22,000 ohms, ½ w., carbon
*URD-113	R2, 13, 14	RESISTOR—470,000 ohms, ½ w., carbon
*URD-129	R10	RESISTOR—2.2 meg., ½ w., carbon
*URD-141	R12	RESISTOR—6.8 meg., ½ w., carbon
*URF-049	R16	RESISTOR—1000 ohms, 2 w,, carbon
		SPECIALIZED REPLACEMENT PARTS
RAB-135	L1	BACK—Cabinet back cover (includes loop L1)
*RAC-085		MOUNTING BRACKET—Metal back cover holds clock to cabinet
RAU-342		CABINET—Dark mahogany, Model 521
RAU-343		CABINET—Blond mahogany, Model 522
*RCC-074	C22	CAPACITOR—.003 mf., 600 v., paper
*RCE-116	C23A, B	CAPACITOR—50 mf., 150 v.; 50 mf., 150 v., dry electrolytic
*RCT-045	C2A, 2B C3, 4	CAPACITOR—Tuning capacitor (oscillator and r-f-section)
*RCW-1043	C25	CAPACITOR—47 mmf., ceramic
*RCW-3013	C16, 17, 19, 20	CAPACITOR—220 mmf., .002 mf., 220 mmf., .005 mf. (4 section ceramic)
RDK-217		KNOB—Tuning dial wheel. Does not include dial scale, see item RDS-090

Cat. No.	Symbol	Description
		SPECIALIZED REPLACEMENT PARTS (Cont.)
RDK-218		KNOB—Volume control knob
*RDS-090		DIAL SCALE—Paper scale
*RHC-017		CLIP—For mounting osc. coil, T4
*RHC-024		CLIP—For mounting C23
*RHG-015		GROMMET—For tuning cond.
*RHH-004		FASTENER—Snap fastener for holding back
*RHI-010		STRAIN RELIEF GROMMET—For power cord
*RHJ-005		SPACER FOR TUNING CONDENSER
*RHS-043		PLUG AND SWITCH MOUNTING BRACKET—For J2 and S1
*RJC-004		CLIP—Loop connector clip
RJJ-008	J2	APPLIANCE RECEPTACLE
*RJS-092		SOCKET—Tube socket for 50C5, 35W4
*RJS-116		SOCKET—Tube socket for 12SA7
*RJS-117		SOCKET—Tube socket for 12SQ7
*RJS-141		SOCKET—For 12BA6 tube, 7 pin
*RLC-090	T4	COIL—Oscillator coil
*RMS-205		SLEEP CONTROL BOOSTER SPRING
*RRC-054	R11	POTENTIOMETER—0.5 meg., volume control
RSW-067	S1	SWITCH—ON-OFF Switch
*RTL-094	T1	TRANSFORMER—1st I-F transformer
*RTL-095	T2	TRANSFORMER—2nd I-F transformer
RTO-036	T3	TRANSFORMER—Output transformer
*RWL-009		CORD—Power cord (brown)
*RYN-005		NAMEPLATE G.E. MONOGRAM
*RZC-009	M1	CLOCK—60 cycle, 105–125 v., clock assembly
*S400C	LS1	SPEAKER—PM loudspeaker

†CLOCK REPLACEMENT PARTS LIST

Cat. No.	Symbol	Description
		MISCELLANEOUS
*XC3X36	1	KNOB—Time set shaft knob (bronze)
*XC4X5		KNOB—Alarm set knob (ivory)
*XC31X26		HAND—Sweep second hand
*XC32X199		HANDS—Hour and minute hands (luminous)
*XC53X31		BEZEL—Outer mounting rim
*XC53X117		BEZEL—Numeral ring (gold finish)
*XC55X15		DIAL—Alarm dial scale
*XC58X16		CRYSTAL—Glass crystal
*XC59X247		RING—Color ring for numeral bezel
*XC59X716		KNOB—Wake-up Manual and Sleep control knob (ivory)
*XC61X937		DIAL—Clock dial scale (luminous)
		CLOCK MOVEMENT
*XC1X1	3	SCREW—Holds field core to baseplate, No. 4–40 x 1 1/8 in. long, round head
*XC1X2	4	LOCKWASHER—Under screw head of switch assembly mounting screw and field core mounting
*XC1X6	10	SCREW—Used to assemble switch assembly to switch bracket
*XC1X43	23	HEX NUT—For screw mounting switch assembly to switch bracket
*XC10X141	14	SHAFT ASSEMBLY—Time set shaft and gear assembly
*XC11X11	6	SHAFT ASSEMBLY—Alarm set shaft and gear assembly
*XC13X11	17	GEAR ASSEMBLY—Hour hand gear and sleeve assembly
*XC14X32	18	GEAR ASSEMBLY—Minute hand friction gear, pinion gear and sleeve assembly
*XC15X3	16	GEAR ASSEMBLY—Alarm dial gear and sleeve assembly
*XC16X14	19	GEAR ASSEMBLY—Sweep second hand gear and shaft assembly
*XC17X8	27	GEAR AND CAM—Alarm signal cam and gear assembly
*XC34X173	9	FRONT PLATE ASSEMBLY—Complete with case studs and alarm set shaft spring (7)
*XC35X93	25	BASE PLATE AND BACK GEAR—Base plate assembled complete with studs, back gear and pinion, and vibrator

Cat. No.	Symbol	Description
		CLOCK MOVEMENT (Cont.)
*XC40X76	24	SWITCH INSULATOR ASSEMBLY—Consists of: two plastic and one fibre switch contact spring spacers
*XC40X77	28	GEAR AND SPRING ASSEMBLY—Drives alarm dial gear and hour hand gear (complete with pinion and shaft, pinion and gear, spring, washers and retaining clip)
*XC40X80	21	CONTACT ASSEMBLY—Lower switch contact and spring
*XC40X185		SPRING—Switch control shaft index spring (for cam indexed control shafts)
*XC40X194	29	LEVER—Sleep control switch lever
*XC40X196	15	GEAR AND SPRING ASSEMBLY—Pinion drive for sleep control segment gear (consists of pinion gear, pinion gear and shaft, spring, washers, and retaining clip)
*XC40X197	8	LEVER—Alarm control switch cam lever
*XC40X198	22	CONTACT ASSEMBLY—Upper switch contact and spring with attached fibre arm
*XC40X202	5	SPACER BUSHING—Field core spacer at screw mounting to base plate
*XC40X252	26	WASHER—Alarm signal cam and gear friction washer
*XC40X275		SPACER BUSHING—Wake-up Manual switch control shaft bushing
*XC40X276	20	SPACER BUSHING—For time set shaft
XC40X277	30	SHAFT—Sleep control shaft and gear segment assembly
*XC44X38	2	MOTOR ROTOR ASSEMBLY—Cased rotor and pinion (60 cycles)
*XC45X69	11	MOTOR FIELD ASSEMBLY—Consists of: core, shading poles, and field coil (60 cycles)
*XC59X699	13	SHAFT ASSEMBLY—Wake-up Manual control shaft assembly (detent spring index type)
*XC59X723	13	SHAFT ASSEMBLY—Wake-up Manual control shaft assembly (cam index type)
*XC64X1		SCREW—Switch bracket and front plate mounting screws

©John F. Rider

Compliments of www.nucow.com

MODELS 600, 601, 603, 604

SPECIFICATIONS

CABINET:	Composition . . . . . plastic Height . . . . . 7½ inches Length . . . . . 10½ inches Width . . . . . 5½ inches Weight (with batteries) Model 600 . . . . . 8 pounds Model 601, 3, 4 . . . . . 8¾ pounds
POWER SUPPLY:	Model 600 Battery Operation only. Battery . . . . . Eveready No. 756, or equivalent Model 601, 3, 4 (AC or DC Operation) Voltage . . . . . 105–120 volts Frequency (on AC) . . . . . 50–60 cycles Power Consumption . . . . . 15 watts Battery Operation Battery . . . . . Eveready No. 756 or equivalent
OPERATING FREQUENCIES:	Broadcast Band . . . . . 540–1600 KC I-F Amplifier . . . . . 455 KC
POWER OUTPUT:	Undistorted . . . . . 130 milliwatts Maximum . . . . . 200 milliwatts
LOUDSPEAKER:	Type . . . . . Alnico PM Outside Cone Diameter . . . . . 4 inches Voice Coil Impedance (400 cycles) . . . 3.2 ohms
TUBE COMPLEMENT:	Oscillator-Converter . . . . . 1R5 I-F Amplifier . . . . . 1T4 Detector Audio Amplifier . . . . . 1S5 Power Amplifier 3V4

GENERAL INFORMATION

The Model 600 or 601, 3, 4, portable radio is a four-tube superheterodyne broadcast receiver with a range of 540 to 1600 kc. The Model 600 operates on battery only, while for the Model 601, 3, 4 the power source may be either 105 to 120 volts, 50 to 60 cycles, or direct current, when a power outlet is available. The receiver will also operate from its battery source, thus making it independent of external electric power, providing excellent operation in any location where external power is not available.

BATTERY—AC OR DC OPERATION (MODEL 601, 603, 604 ONLY)

The left knob turns on the battery provided that the power plug is well inserted into the socket on the chassis.

For AC or DC supply (105-120 volts, 50 to 60 cycle operation), the same knob switches on the power when the power plug is pulled out of its socket on the chassis and inserted into the house outlet.

ELECTRICAL CIRCUIT ALIGNMENT

ALIGNMENT FREQUENCIES

R-F . . . . . 1620 and 1500 KC
I-F . . . . . 455 KC

EQUIPMENT REQUIRED

1. Test Oscillator with Tone Modulation.
2. AC Output Meter.
3. .05 Mf. Paper Capacitor.
4. Insulated Screwdriver.
5. Antenna Loop.

PROCEDURE—GENERAL

The Alignment Chart gives the alignment procedure with correct sequence of trimmer adjustments.

The chassis must be removed from the cabinet during i-f alignment.

ALIGNMENT CHART

Step	Test-Osc. Connected to:	Test-Osc. Frequency	Radio Pointer Setting	Adjust for Maximum Meter Reading
1	1T4 grid (Pin 6) in series with .05 mf capacitor	455 KC	550 KC	2nd I-F transformer (T2) primary and secondary coils.
2	1R5 grid (Pin 6) in series with .05 mf capacitor	455 KC	550 KC	1st I-F transformer (T1) primary and secondary coils.
3	Inductively coupled	1620 KC	Gang condenser completely open	C2B
4	Inductively coupled	1500 KC	Tune for max. signal. Then set dial pointer at 1500 KC on dial mark	C1B

The test oscillator output signal should be attenuated so that the output meter reading never exceeds ½ volt. Connect the capacitor listed in column 2 of Alignment Chart between the "high side" of the test oscillator and the point of input specified.

The output meter should be connected to the chassis ground; the "high side" of the oscillator output should be connected as indicated in the Alignment Chart. During the entire alignment procedure, the volume control should be at its maximum position. For alignment of the oscillator and r-f trimmers, the input signal should be inductively coupled to the radio loop antenna by connecting a 4-turn, 6-inch diameter loop of bell wire across the signal generator output terminals, and locate the loop about one foot from the radio loop antenna. To prevent possible errors in peak readings, the position of the loop with respect to the radio loop antenna should not be changed during any one set of adjustments.

STAGE GAIN AND VOLTAGE CHECKS

Stage gain by vacuum voltmeter or similar measuring device may be used to check circuit performance and isolate trouble. The gain values listed may have tolerances of 20 per cent. Reading should be taken with low signal input so that the AVC is not effective.

1. R-F STAGE GAINS

	600	601, 3, 4,	
1R5 Grid (Pin 6) to 1T4 (Pin 6)	17	20	@1000 KC
1T4 Grid (Pin 6) to 1S5 Diode Plate (Pin 3)	65	50	@ 455 KC

2. AUDIO GAINS

.02 volt at 400 cycles across volume control (R4) with control set at maximum will give approximately .050 watts output across speaker voice coil.

3.

DC voltage developed across oscillator grid resistor (R1) averages 2.0 volts at 1000 kc with respect to B minus.

4. SOCKET PIN VOLTAGES

Fig. 5 and 6 show voltages from all tube pins to B−. Voltage readings much lower than those specified may help localize defective components or tubes.

©John F. Rider

Compliments of www.nucow.com

MODELS 600, 601, 603, 604

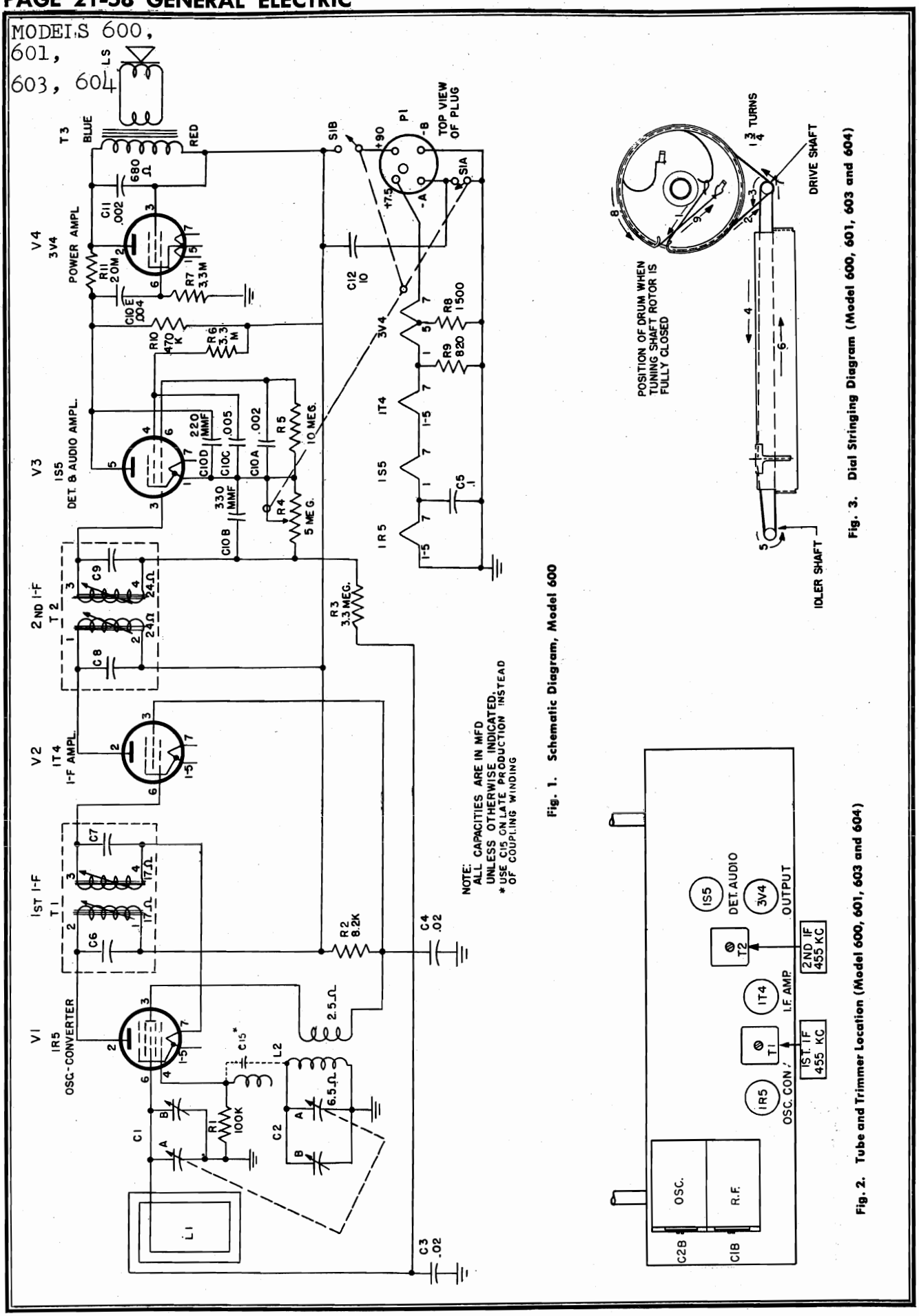

Fig. 1. Schematic Diagram, Model 600

Fig. 2. Tube and Trimmer Location (Model 600, 601, 603 and 604)

Fig. 3. Dial Stringing Diagram (Model 600, 601, 603 and 604)

©John F. Rider

Compliments of www.nucow.com

MODELS 601, 603, 604

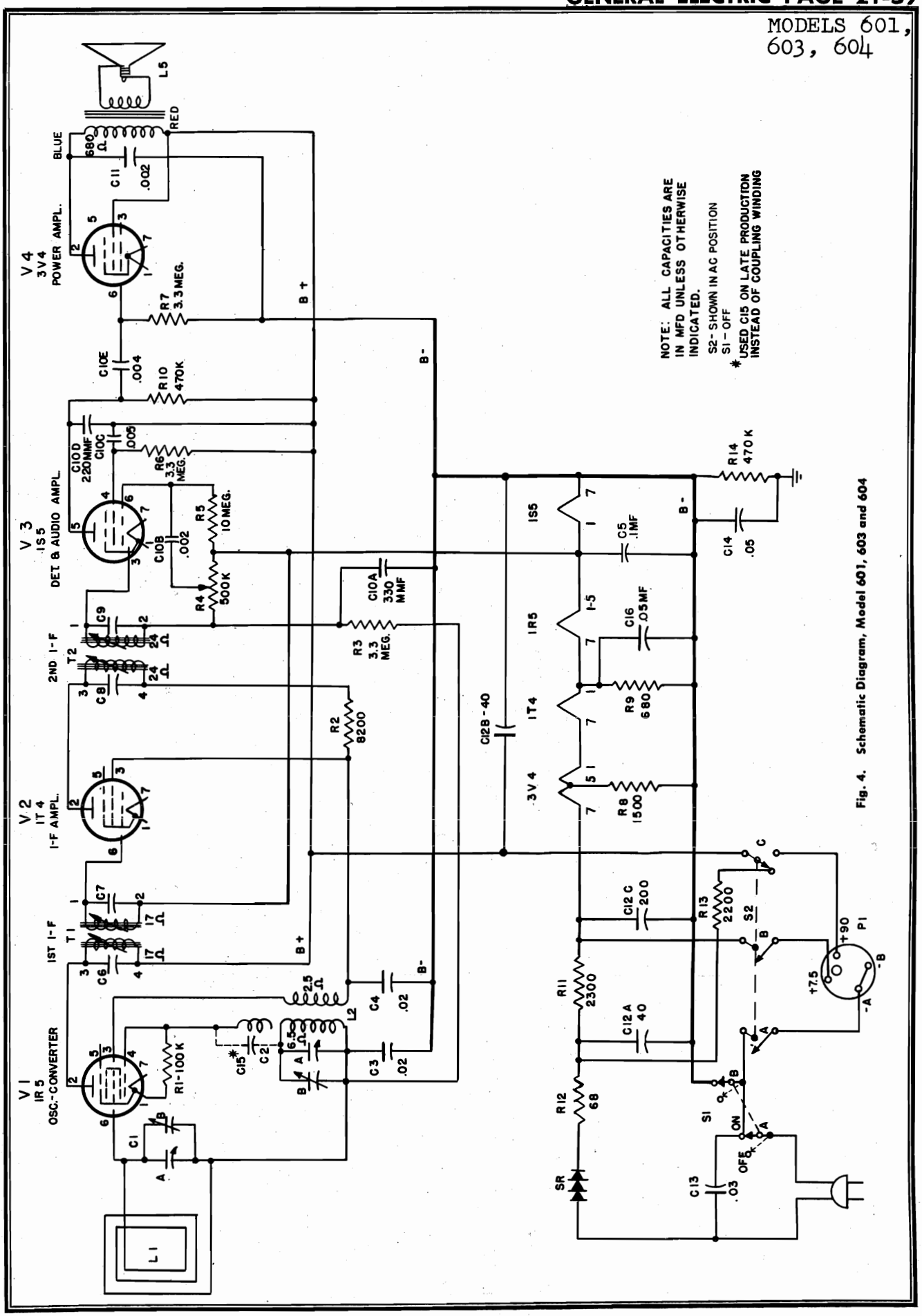

Fig. 4. Schematic Diagram, Model 601, 603 and 604

©John F. Rider

Compliments of www.nucow.com

MODELS 600,
601, 603, 604

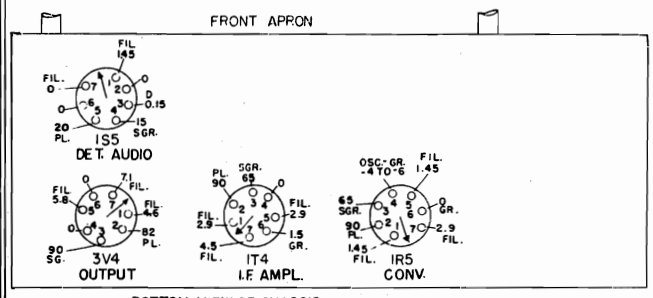

BOTTOM VIEW OF CHASSIS

DC VOLTAGE TO B MINUS MEASURED WITH 20,000 OHMS PER VOLT METER. RECEIVER OPERATING ON 120 VOLTS AC. BATTERY VOLTAGES ARE SIMILAR.

Fig. 5. Socket Voltages, Model 600

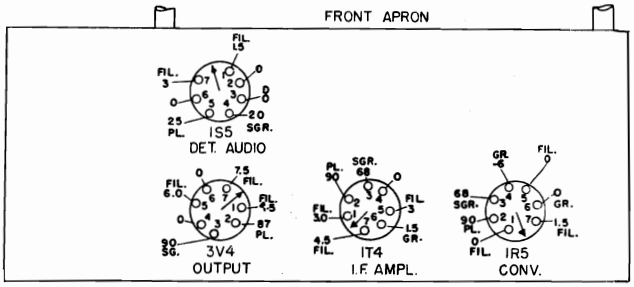

BOTTOM VIEW OF CHASSIS

DC VOLTAGE TO B MINUS MEASURED WITH 20,000 OHMS PER VOLT METER. RECEIVER OPERATING ON FRESH BATTERY.

Fig. 6. Socket Voltages, Model 601, 603 and 604

MODELS 600, 601, 603, AND 604
REPLACEMENT PARTS LIST

Cat. No.	Symbol	Description
		UNIVERSAL REPLACEMENT PARTS
*UCC-002	C11	CAPACITOR—.002 mf, 200 v, paper
*UCC-009	C3, 4	CAPACITOR—.02 mfd, 200 v, paper
*UCC-028	C14	CAPACITOR—.05 mfd, 400 v, paper
*UCC-042	C13	CAPACITOR—.03 mfd, 400 v, paper
*UCC-048	C5	CAPACITOR—.1 mfd, 400 v, paper
*URD-045	R9††	RESISTOR—680 ohms, ½ w. carbon
*URD-047	R9†	RESISTOR—820 ohms, ½ w, carbon
*URD-053	R8	RESISTOR—1500 ohms, ½ w, carbon
*URD-071	R2	RESISTOR—8200 ohms, ½ w, carbon
*URD-097	R1	RESISTOR—100,000 ohms, ½ w, carbon
*URD-113	R10††, 14††	RESISTOR—470,000 ohms, ½ w, carbon
*URD-133	R3, 6, 7	RESISTOR—3.3 meg, ½ w, carbon
*URD-145	R5	RESISTOR—10 meg, ½ w, carbon
*URE-021	R12††	RESISTOR—68 ohms, 1 w, carbon
*URE-057	R13††	RESISTOR—2200 ohms, 1 w, carbon
*UOP-457		SPEAKER—PA speaker, 4 inches
*RHJ-005††		SPACER—For tuning capacitor
*RHM-062		CLIP—Speaker clip
*RHY-010		HANDLE—Handle for cabinet
*RJC-016		TERMINAL—Speed nut
*RJS-024††		MOUNTING PLATE—For electrolytic capacitor
*RJS-100		SOCKET—Tube socket for 1R5
*RJS-124		SOCKET—Tube socket for 1S5 & 3V4
*RJS-125		SOCKET—Tube socket for 1T4 tube
*RHC-015		CLIP—Oscillator coil clip
*RJC-016		TERMINAL—Speed nut
*RLC-101	L2	COIL—Oscillator coil
*RLL-035	L1	LOOP—Loop antenna
*RMC-040		CATCH—Spring catch
*RMS-118		SPRING—Dial spring
*RMU-049		SHAFT—Tuning shaft

Cat. No.	Symbol	Description
*RRC-107	R4, S1	VOLUME CONTROL—Volume control and switch
*RRD-1015	R11†	RESISTOR—20 meg, ½ w, carbon
*RRW-042	R11††	RESISTOR—2300 ohms, 10 w, w.w.
*RSW-058	S2††	SWITCH—Power plug switch
*RTL-052	T1††	TRANSFORMER—I-F transformer
*RTL-051	T2†	TRANSFORMER—I-F transformer
*RTL-079	T1†, 2††	TRANSFORMER—I-F transformer
*RTO-070	T3	TRANSFORMER—Output transformer
*RWL-005††		POWER CORD
		SPECIALIZED REPLACEMENT PARTS
*RAB-096		BACK—Cabinet back
*RAU-308		CABINET—Plastic cabinet
*RCE-095††	C12A, B, C	CAPACITOR—Electrolytic capacitor 40 mf, 150 v; 40 mf, 250 v; 200 mf, 20 v
*RCE-098†	C12	CAPACITOR—Electrolytic capacitor 10 mf
*RCT-036	C1, 2	CAPACITOR—Tuning capacitor
*RCW-3015	C10A, B, 10C, D, E	CAPACITOR—Ceramic combination 220 mmf, .002 mf, .005, 220 mmf, .004 mf
*RDC-032		DIAL CORD
*RDK-136		KNOB
RDP-050		POINTER—Dial pointer
*REX-005	SR	RECTIFIER—Selenium rectifier
*RHB-006		BUTTON—Plug button
*RHC-015		CLIP—Oscillator coil clip
*RHC-016		COTTER PIN—For drive axle
*RHC-020		COTTER PIN—Cotter pin for handle
*RHE-009		EYELET—Eyelet for cabinet
*RHG-006††		GROMMET—For power cord
*RHG-018††		GROMMET—For tuning capacitor
*RHI-009		HINGE—Hinge for cabinet

*Used on other Models.
†For Model 600 only.
††for Model 601, 3, 4 only.

©John F. Rider

Compliments of www.nucow.com

MODEL 650

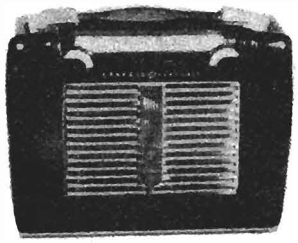

SPECIFICATIONS

CABINET:	Composition ..... Plastic Height ..... 9½ inches Length ..... 12½ inches Width ..... 5½ inches Weight (with batteries) ..... 11 pounds
POWER SUPPLY:	Battery ..... Eveready No. 753, or equivalent AC or DC operation ..... 105–115 volts Frequency (on AC) ..... 60 cycles Power Consumption ..... 25 watts
OPERATING FREQUENCIES:	Broadcast Band ..... 540–1600 kc I-F Amplifier ..... 455 kc
POWER OUTPUT:	Undistorted ..... 180 milliwatts Maximum ..... 250 milliwatts
LOUDSPEAKER:	Type ..... Alnico PM Outside Cone Diameter ..... 4 inches Voice Coil Impedance (400 cycles) ... 3.2 ohms
TUBE COMPLEMENT:	R-F Amplifier ..... 1T4 Oscillator-Converter ..... 1R5 I-F Amplifier ..... 1T4 Detector Audio Amplifier ..... 1S5 Power Amplifier 3V4

GENERAL INFORMATION

The Model 650 portable radio is a five-tube superheterodyne broadcast receiver with a range of 540 to 1600 kc. The power source may be either 105-115 volts, 50-60 cycles a-c, or d-c, when a power outlet is available. The receiver will also operate from its battery source, thus making it independent of external electrical power, providing excellent operation in any location where external power is not available.

BATTERY—AC OR DC OPERATION.

The left knob turns on the battery, provided that the power plug is well inserted into the socket in the chassis.

For a-c or d-c supply (105-115 volts, 50 to 60 cycle operation), the same knob switches on the power when the power plug is pulled out of its socket in the chassis and inserted into the house outlet.

ELECTRICAL CIRCUIT ALIGNMENT

EQUIPMENT REQUIRED:

1. Test Oscillator with Tone Modulation.
2. A-C Output Meter.
3. Paper Capacitor .05 Mf.
4. Insulated Screwdriver.
5. Coupling Loop for Test Oscillator (see text).
6. Isolation Transformer.

PROCEDURE—GENERAL.

1. The Alignment Chart gives the alignment procedure with correct sequence of trimmer adjustments. The chassis must be removed from the cabinet during i-f alignment. The locations of the i-f and r-f adjustments are shown in Figure 2.

2. The "low" side of the test oscillator output should be connected to the chassis ground; the "high" side should be connected as indicated in the alignment chart. The test oscillator output signal should be attenuated so that the output meter reading never exceeds ½ volt. Connect the capacitor listed in column 2 of the alignment chart between the "high" side of the test oscillator and the point of input specified.

PRECAUTION: *If the signal generator is a-c operated, use an isolating transformer between the power supply and the radio receiver input. The use of an isolating capacitor is not recommended, as a-c through the capacitor will introduce hum modulation and/or create the possibility of a burned out signal generator attenuator.*

3. The output meter should be connected across the voice coil terminals of the speaker.

4. During the entire alignment procedure the volume control should be rotated clockwise to its maximum position.

5. For alignment of the oscillator and r-f trimmers, the input signal should be inductively coupled to the radio loop antenna by connecting a 4-turn, 6-inch diameter loop of bell wire across the signal generator output terminals, and locate the loop about one foot from the radio loop for alignment. The position of the loop with respect to the radio loop should not be changed during any one set of adjustments to prevent possible errors in peak readings.

6. The antenna loop acquires a different inductance in the position when the back is closed. Therefore, the adjustment of the antenna and r-f trimmers has to be made with the back closed, through the two openings on the right side of the cabinet which normally are closed by plug buttons. After adjustments have been completed, the two plug buttons have to be put in place again.

ALIGNMENT CHART

Step	Test-Osc. Connected to:	Test-Osc. Frequency	Radio Pointer Setting	Adjust for Maximum Meter Reading
1	1T4 I-F grid in series with .05 mf. capacitor	455 KC	550 KC	Iron cores of I-F transformer T2
2	1R5 converter grid in series with .05 mf. capacitor	455 KC	550 KC	Iron cores of I-F transformer T1
3	Repeat Step 1 and 2			
4	Inductively coupled	1500 KC	1500 KC	Trimmers C15 and C16*
5	Inductively coupled	600 KC	600 KC	Iron core of T4 on back apron of chassis.

*Chassis in cabinet and cabinet back (with loop) closed; remove plug buttons for adjustment.

STAGE GAINS AND VOLTAGE CHECKS

In order to check circuit performance and facilitate trouble shooting, the measurement of stage gain by means of a vacuum voltmeter or similar measuring device is recommended. The gain values listed may have tolerances of 20%. Readings should be taken with low signal input so that the AVC is not effective.

(1) R-F STAGE GAINS.

1T4 R-F Grid (Pin 6) to 1R5 Grid (Pin 6) .... 12 @ 1000 KC
1R5 Grid (Pin 6) to 1T4 Grid (Pin 6) ..... 18 @ 1000 KC
1T4 Grid (Pin 6) to 1S5 Diode Plate (Pin 3) .. 45 @ 455 KC

(2) AUDIO GAIN.

.020 volt at 400 cycles across volume control (R13) with control set at maximum will give approximately .05 watts output across speaker voice coil.

©John F. Rider

Compliments of www.nucow.com

MODEL 650

(3)

D-C voltage developed across oscillator grid resistor (R9) averages −8 volts at 1000 kc with respect to B−.

(4) HUM

The hum voltage measured at the primary of the output transformer should not exceed 0.4 volts. This measurement should be made with an a-c voltmeter of a sensitivity of 20,000 ohm/volt in series with .5 mf. capacitor.

(5) SOCKET PIN VOLTAGES.

Figure 4 shows voltages from all tube pins to B−. Voltage readings much lower than those specified may help localize defective components or tubes.

(6) MULTIPLE CERAMIC CAPACITOR (K68J128).

This multiple capacitor unit is of the ceramic capacitor type and contains five capacitors C11A, B, C, D and C12. This unit, RCW-3015, is illustrated in Figure 5 for lead identification. If during service the ceramic capacitor unit is found to be defective, the entire unit may be replaced by the identical part, RCW-3015, or the defective section may be located and disconnected from the receiver circuit and a single universal capacitor of equivalent electrical value used in its place.

MODEL 650
REPLACEMENT PARTS LIST

Cat. No.	Symbol	Description
		UNIVERSAL REPLACEMENT PARTS
*UCC-037	C13	CAPACITOR—.003 mfd., 400 v., paper
*UCC-041	C7	CAPACITOR—.02 mfd., 200 v., paper
*UCC-042	C14	CAPACITOR—.03 mfd., 600 v., paper
UCC-045	C3, 4, 8	CAPACITOR—.05 mfd., 600 v., paper
*UCE-067	C10	CAPACITOR—100 mfd., 10 v., electrolytic
*URD-043	R6	RESISTOR—470 ohms, ½ w., carbon
*URD-045	R5	RESISTOR—680 ohms, ½ w., carbon
*URD-053	R4	RESISTOR—1500 ohms, ½ w., carbon
*URD-067	R11	RESISTOR—5600 ohms, ½ w., carbon
*URD-097	R9	RESISTOR—100,000 ohms, ½ w., carbon
*URD-113	R7, 15	RESISTOR—470,000 ohms, ½ w., carbon
*URD-129	R12, 16	RESISTOR—2.2 meg., ½ w., carbon
*URD-133	R14, 19	RESISTOR—3.3 meg., ½ w., carbon
*URD-137	R17	RESISTOR—4.7 meg., ½ w., carbon
*URE-013	R1	RESISTOR—33 ohms ±10%, 1 w., carbon
*URE-059	R2	RESISTOR—2700 ohms, 1 w., carbon
		SPECIALIZED REPLACEMENT PARTS
RAB-122		CABINET BACK—(maroon)
RAB-123		CABINET BACK—(grey)
RAG-029		GRILLE—(For maroon cabinet)
RAG-030		GRILLE—(For grey cabinet)
*RAS-001		BATTERY STRAP—Metal strap holds battery
RAU-323		CABINET—(Maroon)
RAU-324		CABINET—(Grey)
*RCE-095	C2A, B, C	CAPACITOR—200 mfd., 25 v; 40 mfd., 150 v; 40 mfd., 150 v; electrolytic
*RCT-039	C1	TUNING CAPACITOR
*RCW-1063	C6	CAPACITOR—47 mmf., ceramic
*RCW-3015	C11A, B, C, D C12	CAPACITOR—.002 mf., 220 mf., .005 mfd., 220 mmf., .005 mf., ceramic
*RDC-032		DIAL CORD
*RDK-136		KNOB—(Fawn) Volume or tuning
RDK-202		KNOB—(Grey) Volume or tuning
*RDP-040		POINTER—Dial pointer
RDS-092		DIAL SCALE
*RER-001	SR	SELENIUM RECTIFIER

Cat. No.	Symbol	Description
		SPECIALIZED REPLACEMENT PARTS (Cont'd)
*RHB-006		PLUG BUTTON—(Maroon) on cabinet door
RHB-012		PLUG BUTTON—(Grey) on cabinet door
*RHC-015		CLIP—(Osc. coil)
*RHC-016		HAIRPIN COTTER—On tuning control shaft
*RHG-018		GROMMET—Tuning capacitor mounting
*RHJ-005		SPACER—Tuning capacitor mounting
*RHM-052		CLIP—(Speaker mounting)
*RHM-056		CLIP—(Grille mounting)
RHM-067		CAP—Brass cover over item RHS-047
RHM-068		CAP—Aluminum cover over item RHS-047
*RHR-005		TUBULAR RIVET—.121" x 7/32" for door hinge
*RHS-010		TUBE SHIELD—For V4 tube
*RHS-041		SCREW FOR HINGE—(Hex head) #6 x 3/8
RHS-047		SCREW—(For handle mounting)
RHN-012		TEE NUT—(For handle mounting)
RHW-023		WASHER—(For handle mounting)
RHY-014		HANDLE—(Maroon)
RHY-015		HANDLE—(Grey)
*RJS-024		MOUNTING PLATE—(Electrolytic)
*RJS-100		TUBE SOCKET—For V2
*RJS-124		TUBE SOCKET—For V4, V5
*RJS-125		TUBE SOCKET—For V1, V3
*RLB-030	T4	R-F TRANSFORMER
*RLC-068	L2	OSCILLATOR COIL
*RLL-038	L1	LOOP ANTENNA
RMS-039		"C" CLIP—On idler pulley shaft
*RMS-118		SPRING—(Dial tension)
*RMS-191		SPRING CATCH—For back cover
RMW-009		IDLER PULLEY—For dial cord
*RPJ-025	PL1	BATTERY PLUG
*RRC-083	R13, S1	VOLUME CONTROL AND SWITCH
*RRW-027	R3	RESISTOR—2300 ohms, 10 w., w.w.
*RSW-058	S2	SWITCH—(Power cord)
*RTL-052	T1	TRANSFORMER—1st I-F transformer
*RTL-079	T2	TRANSFORMER—2nd I-F transformer
*RTO-050	T3	OUTPUT TRANSFORMER
*RWL-005		POWER CORD
*DL-1RS-400D		SPEAKER—4 inch PM speaker

*Used on previous production receivers.

600 volt paper capacitors are stocked to replace 200 or 400 volt rated production units, providing their larger size does not prohibit their use.

©John F. Rider

Compliments of www.nucow.com

MODEL 650

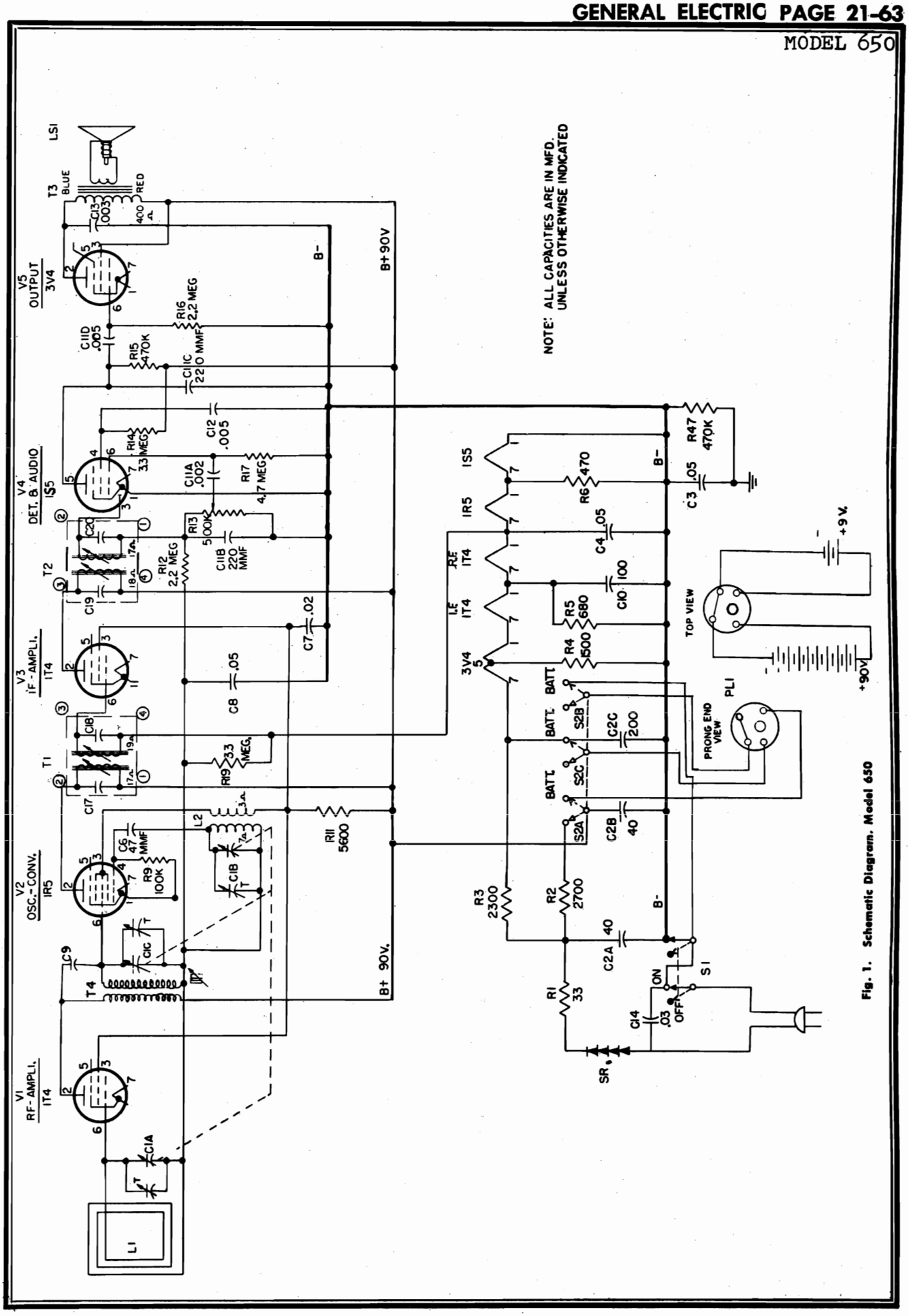

Fig. 1. Schematic Diagram, Model 650

©John F. Rider

Compliments of www.nucow.com

MODEL 650

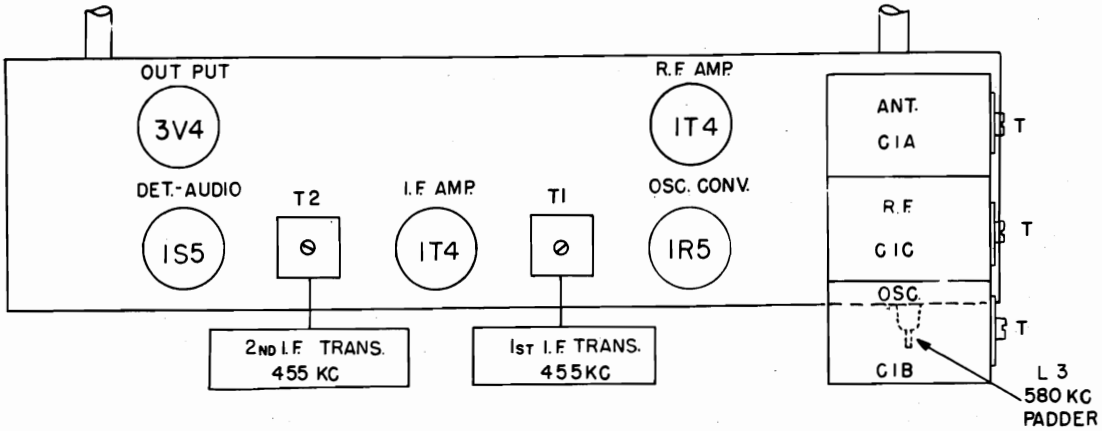

Fig. 2. Tube and Trimmer Location (Model 650)

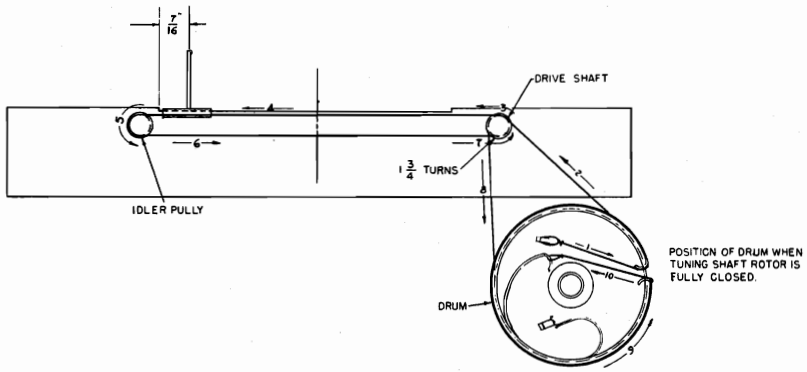

Fig. 3. Dial Stringing Diagram (Model 650)

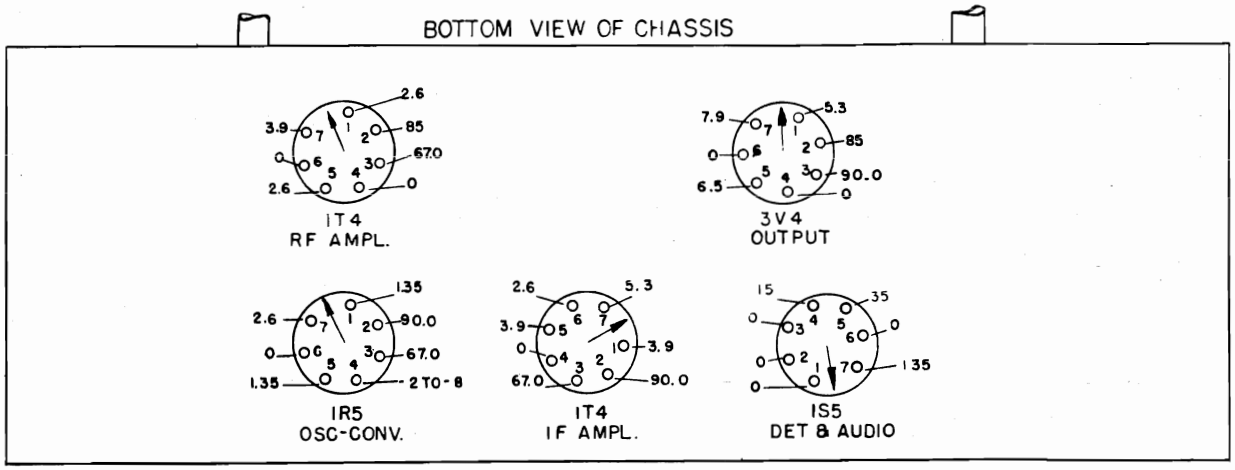

D C VOLTAGES TO GROUND UNLESS OTHERWISE SPECIFIED
ALL RATINGS ARE A.C. OPERATION MEASURED WITH REFERENCE TO B-
RATINGS FOR BATTERY ARE SIMILAR TO AC RATINGS
VOLTAGE IS MEASURED WITH 20,000 OHMS PER VOLT METER

Fig. 4. Socket Voltages (Model 650)

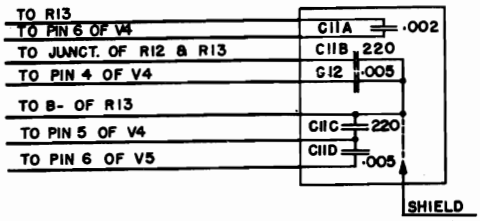

Fig. 5. Connections for Capacitor RCW-3015 (K68J128)

©John F. Rider

Compliments of www.nucow.com

MODEL 740

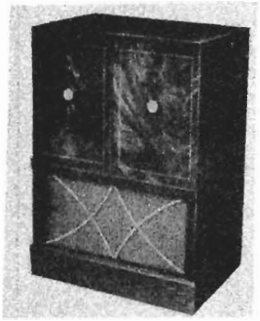

SPECIFICATIONS

CABINET:

Material	Wood
Height	33 7/8 inches
Width	25 inches
Depth	15 3/16 inches

ELECTRICAL (INPUT):

Voltage (AC only)	105–120
Frequency	60 cps
Wattage (on Radio)	35
Wattage (on Phono)	55

OPERATING FREQUENCIES:

Broadcast Band	540–1600 kc
I-F Amplifier	455 kc

POWER OUTPUT (117 Volts Line):

Undistorted	1 watt
Maximum	1.75 watts

LOUDSPEAKER:

Type	Alnico PM
Outside Cone Diameter	10 inches
Voice Coil Impedance at 400 cps	3.2 ohms

PHONOGRAPH PICKUP:

Type	Dual Stylus Variable Reluctance
DC Resistance	280 ohms

RECORD CHANGER:

P15	33 1/3, 45 and 78 RPM

TUBE COMPLEMENT:

V1	RF Amplifier	12SK7
V2	Oscillator Converter	12SA7
V3	IF Amplifier	12BA6
V4	Detector-Audio Amplifier	12SQ7
V5	Rectifier	35Z5GT/G
V6	Audio Power Amplifier	35L6GT
V7	Phono Preamplifier	6AU6
I1	Pilot Lamp	GE Mazda No. 47

GENERAL INFORMATION

The Model 740 is a combination radio-phonograph receiver. It employs a 6-tube superheterodyne receiver and a record changer, Model P15. The servicing information given herein is complete except that it does not cover servicing of the record changer. Service data on record changer Model P15 is covered in service notes ER-S-P15.

CAUTION

One side of the power line is connected to B−. Use an isolation transformer when making service adjustments with the chassis removed from the cabinet.

STAGE GAINS AND VOLTAGE CHECKS

Stage gain measurements by vacuum tube voltmeter or similar measuring device may be used to check circuit performance and isolate trouble. The gain values listed may have tolerances of ±20 per cent. Readings are taken with low signal input so that AVC is not effective.

1. I-F Gain

12SA7 Grid to 12BA6 Grid	50 @ 455 KC
12BA6 Grid to 12SQ7 Diode Plate	50 @ 455 KC

2. Audio Gain

Input of 0.15 volts at 400 cycles across volume control (R6) with control set at maximum will develop approximately ½ watt output across the speaker voice coil terminals.

3. Oscillator Grid Bias

DC voltage developed across the oscillator grid leak (R4) averages 8.5 volts at 1000 kc.

4. Tube Socket Pin Voltages

Fig. 3 shows voltages from tube pins to B−. Voltage readings differing greatly from those specified may help localize defective components.

5. Hum Measurement

Hum measured across the voice coil of the speaker with the volume control set at minimum and band switch in the radio position should not exceed 7 millivolts.

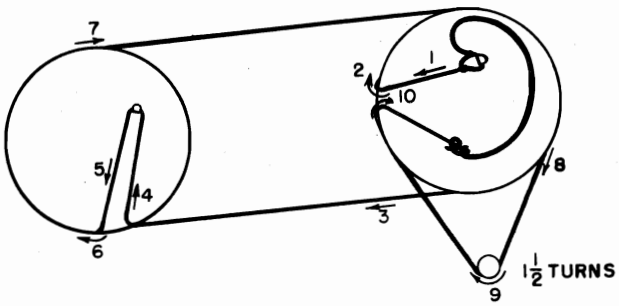

TUNING CAP. AT MAX. CAP.

Fig. 1. Dial Stringing Diagram

©John F. Rider

Compliments of www.nucow.com

MODEL 740

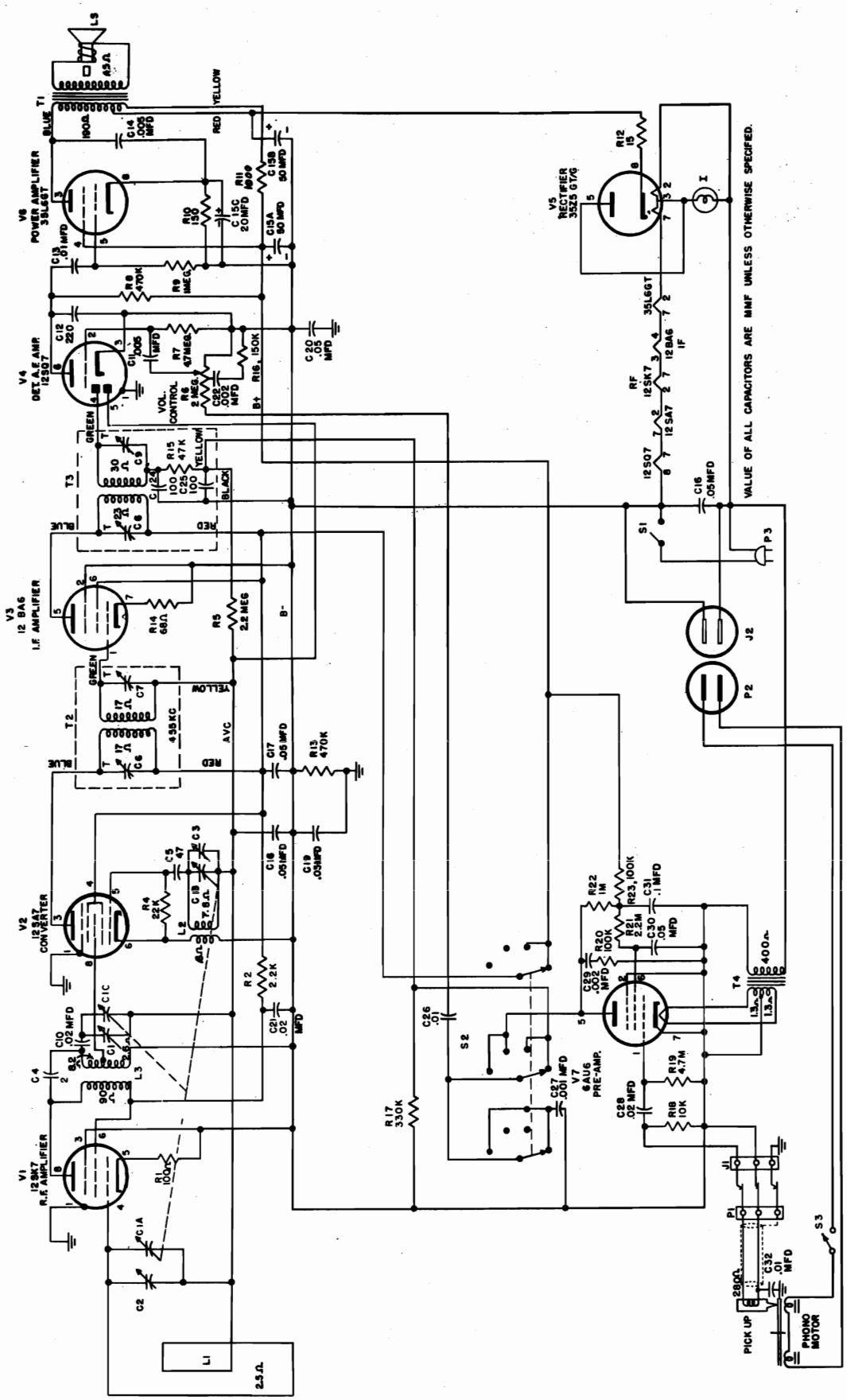

RECORD CHANGER: Model P15, Pages RCD.CH.21-13, through RCD.CH.21-18.

Fig. 2. Schematic Diagram

©John F. Rider

Compliments of www.nucow.com

MODEL 740

ELECTRICAL CIRCUIT ALIGNMENT

EQUIPMENT REQUIRED:

1. Test oscillator with tone modulation.
2. AC voltmeter, 1½ volts full scale.
3. Paper capacitor, 0.05 mf.
4. Insulated screwdriver.
5. Coupling loop for test oscillator (see text).
6. Isolation transformer.

ALIGNMENT PROCEDURE:

The alignment steps are given in table form of the Alignment Chart. Adjustment trimmers are shown in the illustration of Fig. 4.

1. The chassis should be removed from the cabinet with the antenna loop and back attached and the speaker leads reconnected.

2. An isolation transformer should be used for the receiver power source when aligning or servicing AC-DC receivers to prevent short circuiting of equipment and shock hazard.

3. The output meter should be connected across the terminals of the loudspeaker voice coil.

4. The receiver volume control should be turned to maximum and test oscillator signal output attenuated during alignment to develop not more than 1¼ volts output meter reading at the loudspeaker.

5. For i-f alignment, the high side of the signal generator output cable should be connected through a .05 mfd. paper capacitor to the points indicated in the Alignment Chart. The low side of the output cable is connected to the receiver chassis.

6. To align the oscillator and r-f trimmers, the signal generator output is inductively coupled to the radio loop, L1, by connecting a four-turn, six-inch diameter loop of bell wire across its output terminals and then locating the loop about one foot from the radio loop antenna. To prevent possible errors in comparative peak readings, the position of signal generator loop with respect to the radio loop antenna should not be changed during measurement.

ALIGNMENT CHART

Step	Connect Test Oscillator to:	Test Osc. Setting	Radio Dial Setting	Adjust Trimmers for Maximum
		I-F ALIGNMENT		
1	V3, 12BA6 grid (Pin 1), in series with .05 mfd.	455 KC	.....	C9 and C8 of second i-f transformer T3
2	V2, 12SA7 grid (Pin 8), in series with .05 mfd.		.....	C7 and C6 of first i-f transformer, T2
3			.....	Recheck adjustment of C9, C8, C7, C6, for maximum
		R-F ALIGNMENT		
4	Inductively coupled to radio loop.	1620 KC	Minimum capacity C1A, C1B	C3, oscillator trimmer
5		1500 KC	Tune for Maximum	C1, r-f trimmer C2, ant. trimmer on Loop

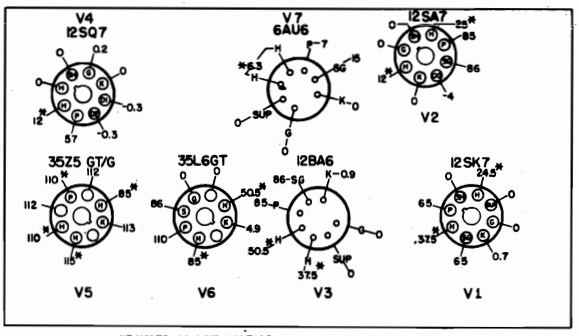

117 VOLTS AC LINE VOLTAGE
NO SIGNAL INPUT
MEASURE BETWEEN SOCKET TERMINALS & B-
USE 20,000 OHM PER VOLT METER
SET VOLUME CONTROL TO MINIMUM
* INDICATES AC FILAMENT VOLTAGES
SWITCH S2 IN RADIO POSITION

Fig. 3. Socket Voltage Diagram

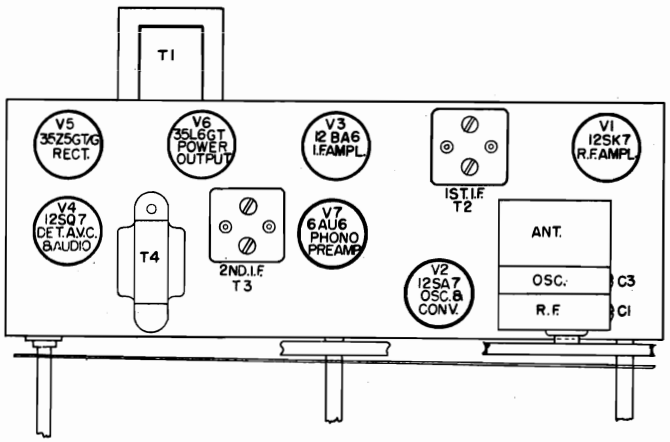

Fig. 4. Tube and Trimmer Location

©John F. Rider

Compliments of www.nucow.com

MODEL 740

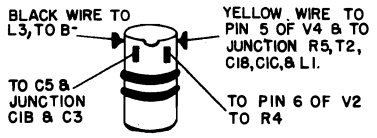

L2 CONNECTIONS

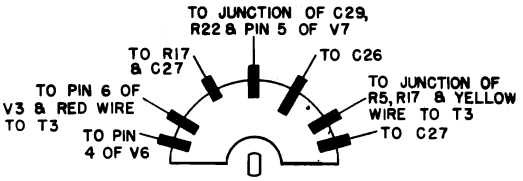

S2 CONNECTIONS

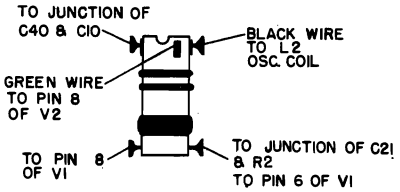

L3 CONNECTIONS

Fig. 5. Coil and Switch Connections

REPLACEMENT PARTS LIST—MODEL 740

Cat. No.	Symbol	Description
		UNIVERSAL REPLACEMENT PARTS
UCC-035	C27	CAPACITOR—.001 mf., 600 v., paper
UCC-036	C22, 29	CAPACITOR—.002 mf., 600 v., paper
UCC-039	C11	CAPACITOR—.005 mf., 600 v., paper
UCC-040	C13, 26	CAPACITOR—.01 mf., 600 v. paper
UCC-041	C21, 28, 10	CAPACITOR—.02 mf., 600 v., paper
UCC-045	C17, 18, 19, 20, 30	CAPACITOR—.05 mf., 600 v., paper
UCC-048	C31	CAPACITOR—.1 mf., 600 v., paper
UCU-020	C5	CAPACITOR—47 mmf., mica
UCU-036	C12	CAPACITOR—220 mmf., mica
URD-005	R12	RESISTOR—15 ohms, ½ w., carbon
URD-021	R14	RESISTOR—68 ohms, ½ w., carbon
URD-025	R1	RESISTOR—100 ohms, ½ w., carbon
URD-029	R10	RESISTOR—150 ohms, ½ w., carbon
URD-057	R2	RESISTOR—2200 ohms, ½ w., carbon
URD-073	R18	RESISTOR—10,000 ohms, ½ w., carbon
URD-081	R4	RESISTOR—22,000 ohms, ½ w., carbon
URD-097	R20, 23	RESISTOR—100,000 ohms, ½ w., carbon
URD-101	R16	RESISTOR—150,000 ohms, ½ w., carbon
URD-109	R17	RESISTOR—330,000 ohms, ½ w., carbon
URD-113	R8, 13	RESISTOR—470,000 ohms, ½ w., carbon
URD-121	R9, 22	RESISTOR—1 meg., ½ w., carbon
URD-129	R5, 21	RESISTOR—2.2 meg., ½ w., carbon
URD-137	R7, 19	RESISTOR—4.7 meg., ½ w., carbon
URF-049	R11	RESISTOR—1000 ohms, 2 w., carbon
		SPECIALIZED REPLACEMENT PARTS
RAB-144		CABINET BACK
RAC-084		CHANGER PAN (COVER)
RAV-140		CABINET (MAHOGANY)
RCE-117	C15A,B,C,D	CAPACITOR—Electrolytic
RCN-039	C4	CAPACITOR—2 mmf., mica
RCT-048	C1A,B,C,C3	TUNING CAPACITOR
RCY-016	C2	CAPACITOR—Trimmer

Cat. No.	Symbol	Description
		SPECIALIZED REPLACEMENT PARTS (Cont'd)
RDC-032		DIAL CORD
RDE-097		ESCUTCHEON
RDK-212		DRAWER PULL
RDK-231		KNOB
RDK-232		KNOB (ARROW)
RDP-051		POINTER—Dial pointer
RDS-102		BACK PLATE AND DIAL SCALE
RMC-002		CLIP—Oscillator coil
RHC-024		CLIP for capacitor
RHC-038		MOUNTING CLIP (RF CLIP)
RHG-018		GROMMET (TUNING CAPACITOR MTG.)
RHG-029		GROMMET
RHJ-007		SPACER (TUNING CAP. MTG.)
RHS-064		SCREW—Wood, No. 4 x 7/16 in., lg, rd. hd.
RJC-001		SPEAKER LEAD PINS
RJS-003		TUBE SOCKET for V1, V2, V4, V5, V6
RJS-049	J2	PHONO POWER SOCKET
RJS-092		TUBE SOCKET for V7
RJS-097	J1	PHONO SOCKET
RJS-141		TUBE SOCKET for V3
RJX-031		PILOT LAMP SOCKET
RLC-015	L2	OSCILLATOR COIL
RLI-125	L3	RF COIL
RLL-041	L1	LOOP—Antenna loop
RMM-151		CHANNEL RUBBER
RMM-153		DRAWER SLIDE
RMS-130		DIAL CORD SPRING
RMS-221		STABILIZER SPRING
RMX-174		DRIVE SHAFT AND BUSHING ASSEMBLY
ROP-018		SPEAKER—10 inch
RJP-003	P2	AC POWER PLUG
RJX-007	P1	PHONO PLUG
RRC-151	R6, S3	VOLUME CONTROL AND SWITCH
RSW-084	S2	PHONO-RADIO-TONE SWITCH
RTF-001	T4	FILAMENT TRANSFORMER
RTL-115	T2	1st I-F TRANSFORMER
RTL-116	T3	2nd I-F TRANSFORMER
RTO-038	T1	OUTPUT TRANSFORMER
RWL-004		POWER CORD

©John F. Rider

Compliments of www.nucow.com

MODELS 752, 753

MODEL 752 MAHOGANY
MODEL 753 BLONDE

SPECIFICATIONS

CABINET

Model	752	753
Material	Wood	Wood
Color	Mahogany	Blonde
Height, inches	$33\frac{15}{16}$	$33\frac{15}{16}$
Width, inches	32	32
Depth, inches	$15\frac{13}{16}$	$15\frac{13}{16}$

ELECTRICAL

Voltage ..... 105–125 volts
Frequency ..... 60 cps
Wattage (Radio) ..... 65 w.
Wattage (Phono) ..... 85 w.

OPERATING FREQUENCIES

AM Band ..... 540–1620 kc
FM Band ..... 88–108 mc

INTERMEDIATE FREQUENCIES

AM Band ..... 455 kc
FM Band ..... 10.7 mc

AUDIO POWER OUTPUT

Undistorted ..... 3.0 watts
Maximum ..... 5.0 watts

LOUDSPEAKER

Type ..... Permanent magnet
Size ..... 12 inches
Voice Coil Impedance at 400 cycles ..... 3.2 ohms

TUBES

(V1) Converter 6BE6
(V2) RF and 1st FM Amplifier 6BA6
(V3) I-F Amplifier 6BA6
(V4) FM Limiter 6AU6
(V5) FM Discriminator, AM Detector and Audio Amplifier 6T8
(V6) Audio Power Output 6V6
(V7) Rectifier 5Y3GT
(V8) Phono Preamplifier 6AU6

DIAL LAMP ..... Mazda No. 42

RECORD CHANGER ..... P15 ($33\frac{1}{3}$, 45 and 78 RPM)

PHONOGRAPH PICK-UP

Type ..... Dual Stylus, variable reluctance
DC Resistance ..... 340 ohms

ANTENNA

AM ..... Built-in loop
FM ..... Power cord antenna or 300 ohm FM antenna

GENERAL

Models 752 and 753 are similar except for cabinet. For service information for the record changer, refer to General Electric service notes ER-S-P15.

These models are designed to operate from built-in antennas or from an external FM 300 ohm antenna. The receiver may be operated on the built-in FM antenna by connecting the brown wire which extends from the rear of the chassis to the left hand terminal of the dipole antenna terminals. If it is necessary to install an external FM antenna, the brown wire extending from the rear of the chassis should be disconnected from the antenna terminal strip.

These receivers use a reflex circuit to amplify the FM r-f signal in V2. The FM r-f signal is coupled to the grid of V2 through C46 and is amplified by V2. It is then coupled from the plate of V2 to the grid of V1, the converter, by C7. L9 keeps the FM r-f signal out of the FM i-f transformer T3, while C7 is a small value to keep the FM i-f from grid of the converter tube.

STAGE GAIN AND VOLTAGE CHECKS

Stage gain measurements, by a vacuum tube voltmeter or similar measuring device, may be used to check circuit performance and isolate trouble. The gain values listed may have tolerances of ±20 per cent. Readings should be taken with low signal input so that AVC is not effective.

1. R-F AND I-F STAGE GAINS

Signal applied through an IRE dummy antenna:

(AM) V1 to V3 Grid ..... 40 at 455 KC
(FM) Dipole Terminals to V1 Grid ..... 1.0 at 98 MC
(FM) V1 Grid to V2 Grid ..... 1.5 at 10.7 MC
(FM) V2 Grid to V3 Grid ..... 50 at 10.7 MC
(FM) V3 Grid to V4 Grid ..... 22 at 10.7 MC

2. AUDIO GAIN

.07 volts at 400 cps across the volume control will give approximately ½ watt output across the speaker voice coil. Set volume control at maximum.

3. OSCILLATOR GRID BIAS

D-c voltage developed across R3:
7 volts at 1000 KC (use 220K resistor to isolate VTVM)
3 volts at 98 MC (use 220K resistor to isolate VTVM)

4. SOCKET VOLTAGES

Figure 6 shows typical tube pin voltages. All readings should be made from the tube pin to chassis, unless otherwise indicated.

5. HUM MEASUREMENT

Hum measured across the voice coil of the speaker with the volume control set at minimum and band switch in the AM position should not exceed 7 millivolts.

On FM position ground the limiter grid through a .01 mfd. capacitor and measure the hum across the voice coil with volume control at maximum. Hum should not exceed 15 millivolts.

©John F. Rider

Compliments of www.nucow.com

MODELS 752, 753

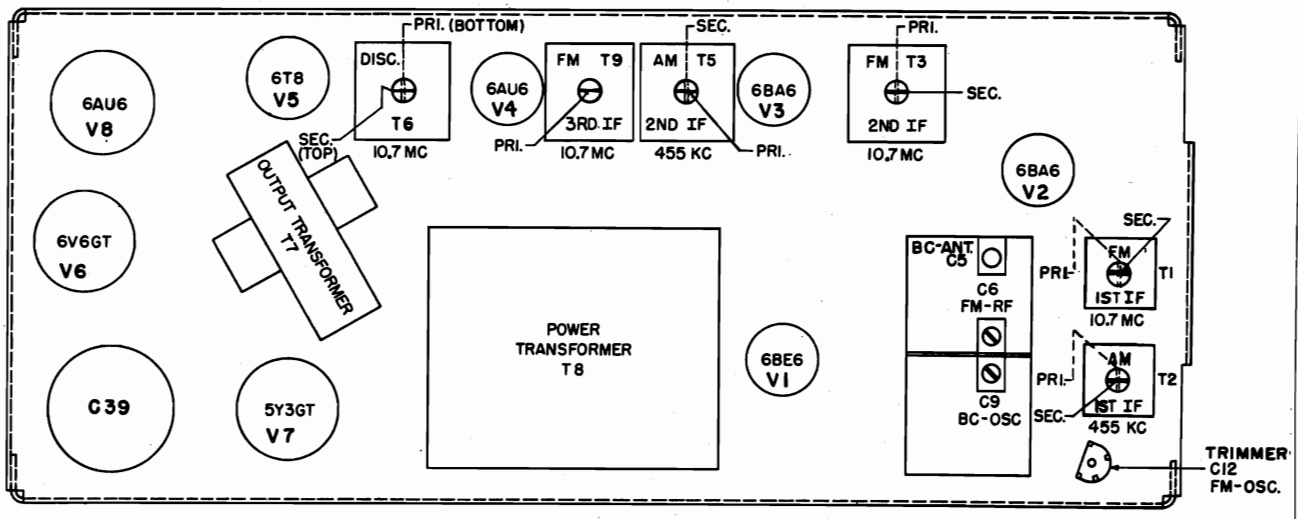

Fig. 1. Tube and Trimmer Location

METER ALIGNMENT

Two methods of alignment are given below (1) meter, and (2) visual alignment, which allows more precision in aligning the i-f transformers and particularly the discriminator transformer, T6.

EQUIPMENT REQUIRED FOR METER ALIGNMENT

1. Test oscillator with tone modulation to cover 455 kc; 520 to 1620 kc, 10.7 mc, and 88 to 108 mc.

2. 20,000 ohm-per-voltmeter, or vacuum tube voltmeter.

3. Output meter.

4. .01 mfd. paper capacitor.

5. 200,000 ohm, ½ watt resistor.

6. Loop of wire. See note 6.

METER ALIGNMENT NOTES

1. Use unmodulated signal.

2. Connect 20,000 ohm-per-volt meter from junction of R26 and C27 to chassis. Use 10-volt scale, steps 4 and 5.

3. Connect 20,000 ohm-per-volt meter from pin 1 of V4 to ground in series with a 200,000 ohm resistor. The resistor must be connected directly to the grid pin to minimize capacity loading and to isolate the i-f signal from the meter. Keep signal generator down so that meter indicates not more than 1 volt (5 microamps through 200,000 ohms). (Use microamp scale.) A vacuum tube voltmeter may be used to measure 1 volt at the grid of V4.

4. Use 400 cycle modulation.

5. Connect a standard output meter across speaker voice coil. Turn volume control full on. Keep signal generator output down so that output meter indicates not more than ½ watt output during alignment.

6. For alignment of the AM oscillator and R-F trimmer, the signal should be inductively coupled to the loop antenna by connecting a four turn, six inch diameter loop of wire across the signal generator terminals, and then locate the loop about one foot from the radio loop antenna. To prevent possible errors in peak readings, the position of the loop in respect to the radio loop should not be changed during any one set of adjustments.

7. To align the first FM i-f transformer T1, it is necessary to disconnect the copper strap from the band switch to pin 7 of V1 (6BE6) by unsoldering the strap from the tube pin connection. Resolder the strap after T1 is aligned.

8. When tuning the secondary of T6 three minimum points will be obtained. The center one is the correct setting. As the transformer is tuned either side of 10.7 MC, the meter reading should increase.

9. Termination impedance of signal generator should be 300 ohms.

10. When detuning the signal generator in step (4), two maximum meter readings will be obtained, one on each side of 10.7 MC. The primary of T6 should be aligned to maximum when the signal generator is tuned to the smaller of these two peaks.

11. Make all chassis connections for FM-IF alignment as short as possible. In step 9 connect the ground side of the signal generator at the chassis ground in the center of the 6BE6 socket using a short ground connection.

METER ALIGNMENT CHART

Step No.	Signal Generator Frequency	Signal Input Point	Band Switch	Dial Setting	Adjust	See Note
			AM-IF ALIGNMENT			
1	455 KC	6BE6 grid (Pin 7 of V1) thru .01 mfd.	AM	550 KC	Primary and secondary cores of T5 for maximum.	4, 5
2					Primary and secondary cores of T2 for maximum.	

©John F. Rider

Compliments of www.nucow.com

FM DISCRIMINATOR ALIGNMENT

3	10.7 MC	6BA6 grid (Pin 1 of V3) thru .01 mfd.	FM	..	T6 secondary core for minimum.	4, 5, 8
4	See Note 10.			...	Detune signal generator to point of max. meter reading.	1, 2, 10
5				..	T6 primary for maximum.	
6	Repeat Step 3.					

FM-IF ALIGNMENT

7	10.7 MC unmodulated	6BA6 grid (Pin 1 of V3) thru .01 mfd.	FM	..	Core of T9 for maximum.	1, 3, 11
8		6BA6 grid (Pin 1 of V2) thru .01 mfd.		..	Primary and secondary cores of T3 for maximum.	
9		6BE6 grid (Pin 1 of V1) thru 22K resistor.		..	Primary and secondary cores of T1 for maximum.	1, 3, 7, 11

AM-RF ALIGNMENT

10	1620 KC	Inductively coupled	AM	C1 completely open.	Adjust C9 for maximum.	4, 5, 6
11	1500 KC			For maximum output.	Adjust C5 for maximum while rocking generator. Set pointer to 1500 KC.	

FM-RF ALIGNMENT

12	108 MC unmodulated	Dipole terminals	FM	C1 completely open.	Adjust C12 for maximum.	1, 3 6, 9
13	108 MC unmodulated			For maximum output.	Adjust C6 for maximum while rocking generator.	

VISUAL ALIGNMENT

EQUIPMENT REQUIRED FOR VISUAL ALIGNMENT

1. General Electric YGS-3 AM and FM signal generator, or equivalent.

2. General Electric ST-2A oscilloscope or equivalent.

3. One meg. resistor, one 22,000-ohm resistor, one .01 mfd capacitor.

NOTES FOR VISUAL ALIGNMENT

1. Connect vertical plates of scope to the limiter grid, pin 1 of V4, through 1 meg. and chassis.

2. Connect vertical plates of scope to junction of C24, R14, and R13 through 1 meg. Connect low side of scope to chassis.

3. Connect vertical plates of scope across C27 to align the discriminator transformer (T6). Connect high side of scope to junction of C27 and R26 through 1 meg.

4. Use a 60 cycle amplitude modulated signal for AM and FM oscillator alignment. Apply a 60 cps voltage to the horizontal plates of the scope.

5. In some cases tuning of the converter grid will cause "pulling" of the oscillator and will change the oscillator frequency. After centering the response curve on the screen if peaking of C5 on AM alignment or C6 on FM alignment causes the curve to move off the screen, it will be necessary to recalibrate the oscillator as in steps 3 and 12.

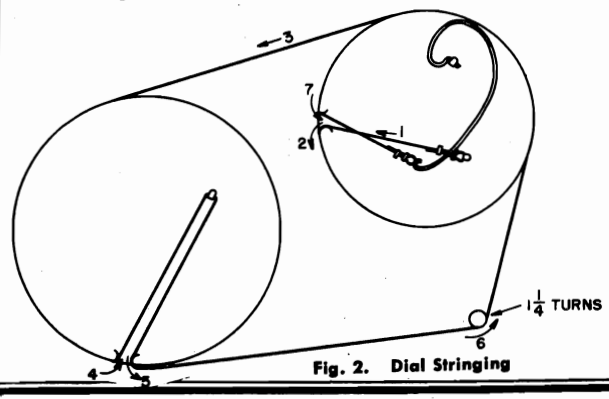

Fig. 2. Dial Stringing

6. The termination impedance of the signal generator should be 300 ohms to properly match the input impedance of this receiver for FM r-f alignment.

7. To align the 1st i-f FM transformer T1, it is necessary to disconnect the copper strap from pin 7 of V1 (6BE6 converter) to the band switch by unsoldering it from the tube pin. Resolder after aligning T1.

8. For alignment of the AM oscillator and r-f trimmers, the signal should be inductively coupled to the loop antenna by connecting a four turn, six inch diameter loop of bell wire across the signal generator terminals, and then locate this loop about one foot from the radio loop antenna. To prevent possible errors in peak readings, the position of the loop with respect to the radio loop should not be changed during any one set of adjustments.

9. When using a sweep signal, it is necessary to apply the same sweep voltage to the horizontal plates of the oscilloscope which is used to sweep the r-f frequency.

It may be necessary to use an RF phase shift network to properly phase the input to the scope. This may be done by shunting a .005 mfd. capacitor across the horizontal plate terminals of the scope and by using a ½ megohm potentiometer in series with the high side of the horizontal sweep voltage line. Adjust the potentiometer to superimpose the retrace on the trace.

10. Make all chassis connections for FM-IF alignment as short as possible. In step 7 connect the ground side of the signal generator at the chassis ground at the center pin of the 6BE6 socket using a short ground connection.

11. If slight distortion is encountered on weak FM stations, it may be necessary to increase the FM-IF bandwidth to a minimum of 120 kc or a maximum of 140 kc wide at 50% of peak amplitude. This should be done by stagger tuning T3 only. The amplitude of the video IF response should not be reduced more than 20%. Use a signal generator accurately calibrated to supply markers for the bandwidth measurement.

To stagger tune T3, use a sweep voltage as in step 7, page 4. Connect a scope as in note 1. Turn the primary of T3 (bottom core) slightly clockwise. Turn the secondary of T3 (top core) counterclockwise to center the 10.7 mc marker at the peak of the curve. Check the bandwidth.

©John F. Rider

Compliments of www.nucow.com

MODELS 752, 753

VISUAL ALIGNMENT CHART

Step No.	Signal Generator Frequency	Signal Input Point	Band Switch	Dial Setting	Adjust	See Note
			AM-IF ALIGNMENT			
1	455 KC ±20 KC at 60 cps sweep rate	6BE6 grid (pin 1 of V1) thru .01 mfd.	AM		Cores of T5 for max. amplitude and symmetry. See Fig. 4 (A).	2
2					Cores of T2 for max. amplitude and symmetry. See Fig. 4 (A).	
			AM-RF ALIGNMENT			
3	1620 KC AM modulated with 60 cps.	Inductively coupled.	AM	C1 completely open. Min. capacity.	C9 for steepest slope of straight line trace.	2, 4, 8
4	1500 KC ±20 KC at 60 cps sweep rate			For max. amplitude of curve.	C5 for max. amplitude and symmetry of curve. See Fig. 4 (A).	2, 5, 8
			FM-IF ALIGNMENT			
5	10.7 MC ± 300 KC at 60 cps sweep rate	6BA6 grid (Pin 1 of V2) thru .01 mfd.	FM		Core of T4 for max. amplitude and symmetry. See Fig. 4 (A).	1, 10
6					Cores of T3 for max. amplitude and symmetry. See Fig. 4 (A).	1, 7, 10
7		6BE6 grid (pin 1 of V1) thru 22K (See note 7)			Cores of T1 for max. amplitude and symmetry. See Fig. 4 (A).	
			FM DISCRIMINATOR ALIGNMENT			
8	10.7 MC ± 300 KC at 60 cps sweep rate.	6BA6 grid (pin 1 of V3) thru .01 mfd.	FM		Primary of T6 for maximum amplitude. See Fig. 4 (B).	3, 10
9					Secondary of T6 for equal amplitude and symmetry of positive and negative peaks of curve. See Fig. 4 (B).	
10	Recheck step 8					
11	Recheck step 9					
			FM-RF ALIGNMENT			
12	108 MC AM modulated with 60 cps.	Dipole terminals	FM	C1 completely open. (Min. capacity)	C12 for steepest slope of straight line trace.	1, 4, 6
13	98 MC ±300 KC at 60 cps sweep rate			For max. amplitude of curve.	C6 for max. amplitude and symmetry of curve. See Fig. 4 (A).	1, 5, 6

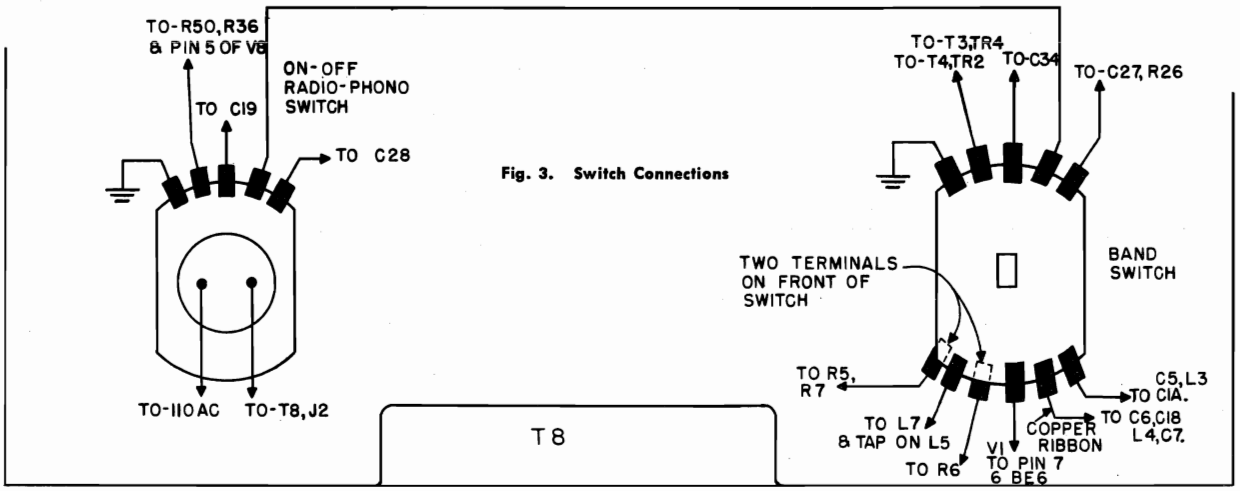

Fig. 3. Switch Connections

Fig. 4. IF and Discriminator Curves

©John F. Rider

Compliments of www.nucow.com

MODELS 752, 753

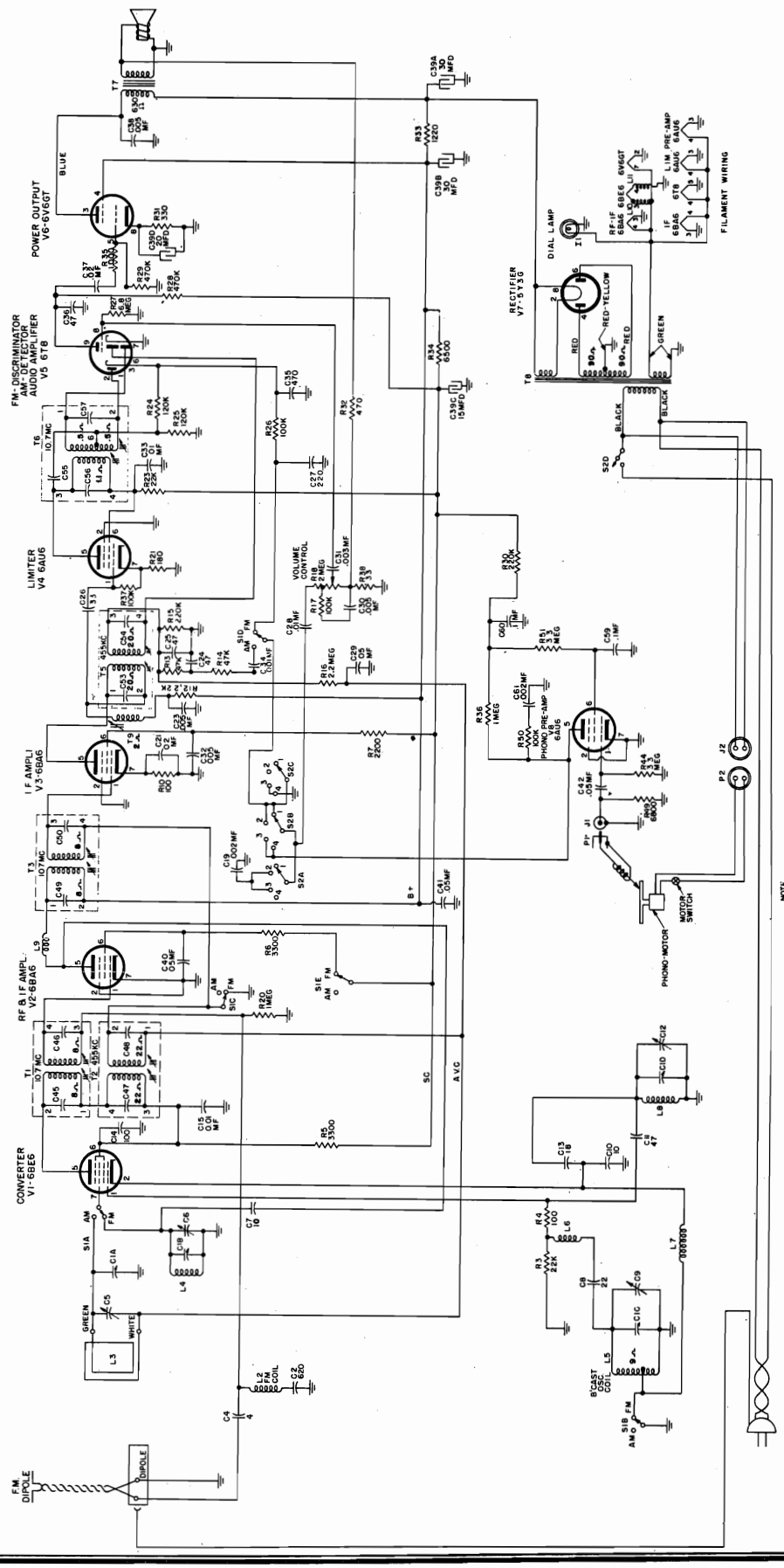

Fig. 5. Schematic Diagram

RECORD CHANGER: Model P15, Pages RCD.CH.21-13, through RCD.CH.21-18.

©John F. Rider

Compliments of www.nucow.com

MODELS 752, 753

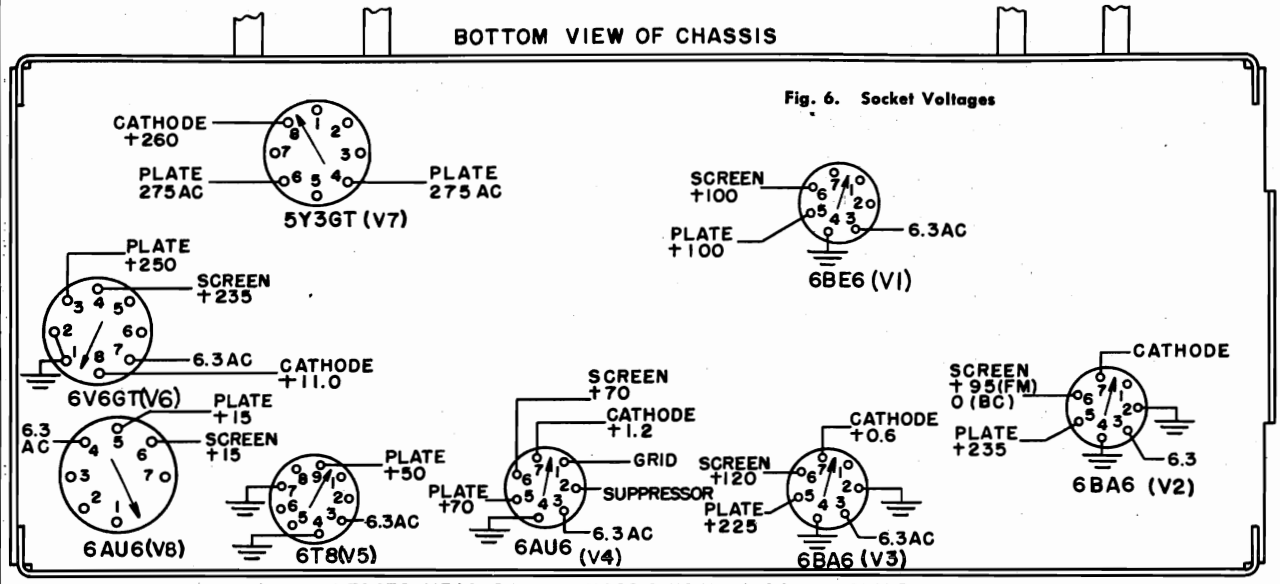

Fig. 6. Socket Voltages

ALL VOLTAGES MEASURED TO CHASSIS USING A 20,000 OHM PER VOLT METER

ALL VOLTAGES ON BC BAND UNLESS OTHERWISE NOTED

REPLACEMENT PARTS LIST

UNIVERSAL REPLACEMENT PARTS

Cat. No.	Symbol	Description
*UCC-035	C34	CAPACITOR—.001 mf., 600 v., paper
*UCC-036	C19, C61	CAPACITOR—.002 mfd., 600 v., paper
*UCC-037	C31	CAPACITOR—.003 mfd., 600 v., paper
*UCC-039	C30, C23, C32	CAPACITOR—.005 mfd., 600 v., paper
*UCC-040	C28, C15, C33, C42	CAPACITOR—.01 mfd., 600 v., paper
*UCC-041	C21, C37	CAPACITOR—.02 mfd., 600 v., paper
*UCC-045	C40, C41, C44	CAPACITOR—.05 mfd., 600 v., paper
*UCC-048	C59, C60	CAPACITOR—.1 mfd., 600 v., paper
*UCC-059	C38	CAPACITOR—.005—1000 v.
*UCU-001	C4	CAPACITOR—4 mmfd., 500 v., mica
*UCU-016	C26	CAPACITOR—33 mmfd., 500 v., mica
*UCU-020	C36	CAPACITOR—47 mmfd., 500 v., mica
*UCU-044	C35	CAPACITOR—470 mmfd., 500 v., mica
*UCU-1036		CAPACITOR—220 mmfd., 500 v., mica
*UCU-2047	C2	CAPACITOR—620 mmfd., 500 v., mica
*URD-013	R38	RESISTOR—33 ohms, ½ w., carbon
*URD-025	R4, R10	RESISTOR—100 ohms, ½ w., carbon
*URD-031	R21	RESISTOR—180 ohms, ½ w., carbon
*URD-041	R32	RESISTOR—470 ohms, ½ w., carbon
*URD-049	R35	RESISTOR—1000 ohms, ½ w., carbon
*URD-057	R7, R12	RESISTOR—2200 ohms, ½ w., carbon
URD-061	R6, R5	RESISTOR—3300 ohms, ½ w., carbon
*URD-069	R49	RESISTOR—6800 ohms, ½ w., carbon
*URD-081	R3, R23	RESISTOR—22,000 ohms, ½ w., carbon
*URD-089	R13, R14	RESISTOR—47,000 ohms, ½ w.
*URD-097	R17, R26, R37, R50	RESISTOR—100,000 ohms, ½ w.
*URD-099	R24, R25	RESISTOR—120,000 ohms, ½ w.
*URD-105	R15, R30	RESISTOR—220,000 ohms, ½ w.
*URD-113	R28, R29	RESISTOR—470,000 ohms, ½ w.
*URD-121	R20, R36	RESISTOR—1 meg., ½ w.
*URD-129	R16	RESISTOR—2.2 meg., ½ w.
*URD-133	R44, R51	RESISTOR—3.3 meg., ½ w.
*URD-141	R27	RESISTOR—6.8 meg., ½ w.
*URE-037	R31	RESISTOR—330 ohms, 1 w.

SPECIALIZED REPLACEMENT PARTS

Cat. No.	Symbol	Description
RAC-084		CHANGER PAN (COVER)
RAV-122		CABINET-752 (MAHOGANY)
RAV-123		CABINET-753 (BLONDE)
*RCE-039	C39A, C39B, C39C, C39D	CAPACITOR—Electrolytic
RCT-043	C1A, C1B, C1C, C1D	CAPACITOR (TUNING)
*RCW-1043	C11	CAPACITOR—47 mmf., ceramic
*RCW-1047	C14	CAPACITOR—100 mmf., ceramic
*RCW-1053	C8	CAPACITOR—22 mmf., ceramic
*RCW-1060	C7, C10	CAPACITOR—10 mmf., 0-coef., ceramic
*RCW-2031	C13	CAPACITOR—18 mmf., ceramic
RCY-055	C12	CAPACITOR—Trimmer
*RDC-032		DRIVE CORD
RDE-087		ESCUTCHEON
RDK-212		DRAWER PULL
RDK-213		KNOB
RDK-214		KNOB (ARROW)
RDP-053		POINTER
*RHC-017		COIL CLIP—For mounting L5
*RHC-034		CLIP—For mounting IF cam
*RHG-010		GROMMET RUBBER (tube)
*RHG-015		GROMMET TUNING (gang)

Cat. No.	Symbol	Description
RHI-011		STRAIN RELIEF—On power cord
*RHJ-006		SPACER TUNING (gang)
RII-047		INSULATING WASHER—Under J1
*RJC-001		SPEAKER LEAD PINS
*RJC-002		SPEAKER LEAD CLIPS for S1212D7
RJP-003	P2	AC POWER PLUG
*RJP-004	P1	PHONO PLUG
*RJP-010	J1	PHONO JACK & PLUG (Female)
RJS-003		SOCKET—Tube socket for V6, V7
RJS-012		MOUNTING PLATE—For electrolytic
*RJS-049	J2	PHONO POWER SOCKET (Female)
RJS-092		SOCKET—Tube socket for V8
RJS-118		SOCKET—Tube socket for V5
RJS-145		SOCKET—Tube socket for V1, V2, V3, V4
RJX-031		PILOT LIGHT SOCKET
*RLB-029	L4	COIL—FM R-F
*RLC-066	L5	COIL—B-C osc.
*RLC-102	L8	COIL—FM osc.
*RLI-088	L2	CHOKE COIL—FM antenna
*RLI-122	L6, L7, L10, L11	CHOKE COIL
RLI-124	L9	CHOKE COIL—FM R-F pl. osc. cathode
RLL-039	L3	LOOP ASSEMBLY
RMM-151		CHANNEL RUBBER
RMM-153		DRAWER SLIDE, GRANT PULLEY HARDWARE
*RMS-111		SPRING (DIAL CORD)
RMS-221		STABILIZER SPRING—On changer pan
RMX-171		DRIVE SHAFT & BUSHING ASSEMBLY
RMX-172		DRUM AND SHAFT ASSEMBLY
RRC-141	R18	VOLUME CONTROL
*RRT-003	R33, R34	RESISTOR—1220-6500 ohms, 9 w., w.w.
RSW-079	S1A, S1B, S1C, S1D	BAND CHANGE SWITCH
RSW-080	S2A, S2B, S2C, S2D	TONE CONTROL SWITCH
*RTD-010	T6, C55, C56, C57	DISCRIMINATOR TRANSFORMER
*RTL-097	T2, C47, C48	1st I-F TRANSFORMER—AM
*RTL-098	T5, C25, C24, C53, C54	2nd I-F TRANSFORMER—AM
*RTL-099	T1, T3, C45, C46, C49, C50	1st, 2nd I-F TRANSFORMER—FM
*RTL-114	T9	FM COIL
RTO-089	T7	OUTPUT TRANSFORMER
RTP-304	T8	POWER TRANSFORMER
RWL-023		POWER CORD—3 wire, 8 ft.
S1212D7		SPEAKER—12 inch

*Parts used on previous models.

©John F. Rider

Compliments of www.nucow.com

MODELS 92-520, 92-521, 92-522, Ch. AR

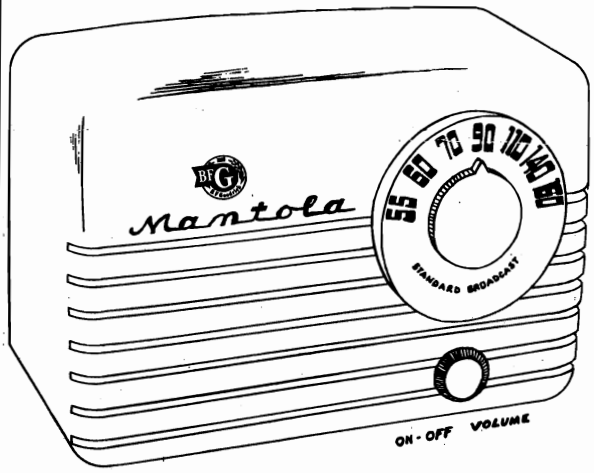

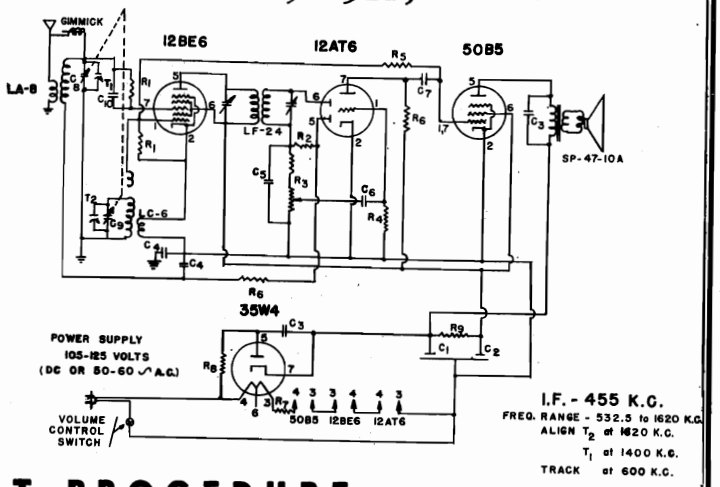

ALIGNMENT PROCEDURE

- Output meter across 3.5 ohm output load.
- Volume control at maximum for all adjustments.
- Align for maximum output. Reduce input as needed to keep output near 0.4 volts.

SIGNAL GENERATOR				SETTING TUNER	ADJUST TRIMMERS TO MAXIMUM OUTPUT (in order shown)
Frequency	Coupling Factor	Connection to Receiver	Ground Connection		
455 kc	.1 mfd	12BE6 Grid	B—	Rotor full open (Plates out of mesh)	Input and output trimmers on IF cans
1620 kc	.1 mfd	12BE6 Grid	B—	Rotor full open (Plates out of mesh)	Oscillator trimmer T2
1400 kc	75 mmf	Hank	B—	1400 kc	Antenna trimmer T1

Ref. No	Part No.	Description
		CAPACITORS
C1, C2	CE-15	2 x 40 mfd 150V. Elect.
C3	CP203-1	.02 mfd 400V paper cond.
C4	CP503-1	.05 mfd 400V paper cond.
C5	CM-101-1	.100 mmf 500V mica cond.
C6	CP202-2	.002 mfd 400V paper cond.
C7	CP502-3	.005 mfd 200V paper cond.
C8, C9	CV-14	Variable Condenser (2 gang)
C10	CM501-1	.500 mmf 500V mica cond.
		RESISTORS
R1	RC183-2	18,000 ohms ½W 10%
R2	RC475-1	4.7 megohms ½W 20%
R3	VC-11	2 meg. vol. cont., 100 K stop
R4	RC106-1	10 megohms ½W 20%
R5	RC334-1	330,000 ohms ½W 20%
R6	RC224-1	220,000 ohms ½W 20%
R7	RW390-5	39 ohms 1W 10%
R8	RC180-2	18 ohms ½W 10%
R9	RC222-5	2200 ohms 1W 10%
		COILS & TRANSFORMERS
	LA-8	Antenna Coil
	LC-6	Oscillator Coil
	LF-24	I.F. Transformer
		MISCELLANEOUS
	CB-106	Cabinet
		Mahogany 92-520
		Ivory 92-521
		Sand 92-522
	KN-20-2	Knob
	KN-21-2	Pointer Knob
	SP-47-10A	4" PM Speaker w Output Trans.

ELECTRICAL SPECIFICATIONS

Power Supply ..... 105-125 Volts D.C. or 50-60 Cycles A.C. 30 Watts

Frequency Range ..... 532.5 to 1620 kc.

Intermediate Freq. ..... 455 kc.

Tuning ..... Two gang capacitor

Speaker ..... 4 inch PM 3.5 ohm voice coil impedance

Power Output ..... 1 watt undistorted 1.5 watt maximum

Sensitivity ..... 800 Microvolts at 50 milliwatts Output

Selectivity ..... 120 kc broad at 1000 times signal at 1000 kc.

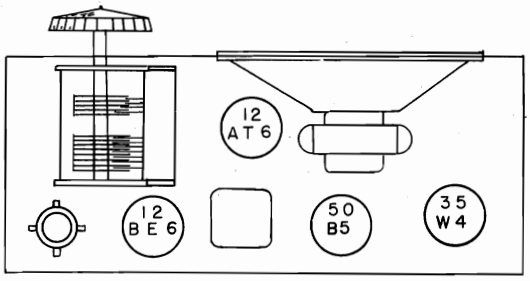

©John F. Rider

Compliments of www.nucow.com

MODEL 92-529,
Ch. BJ

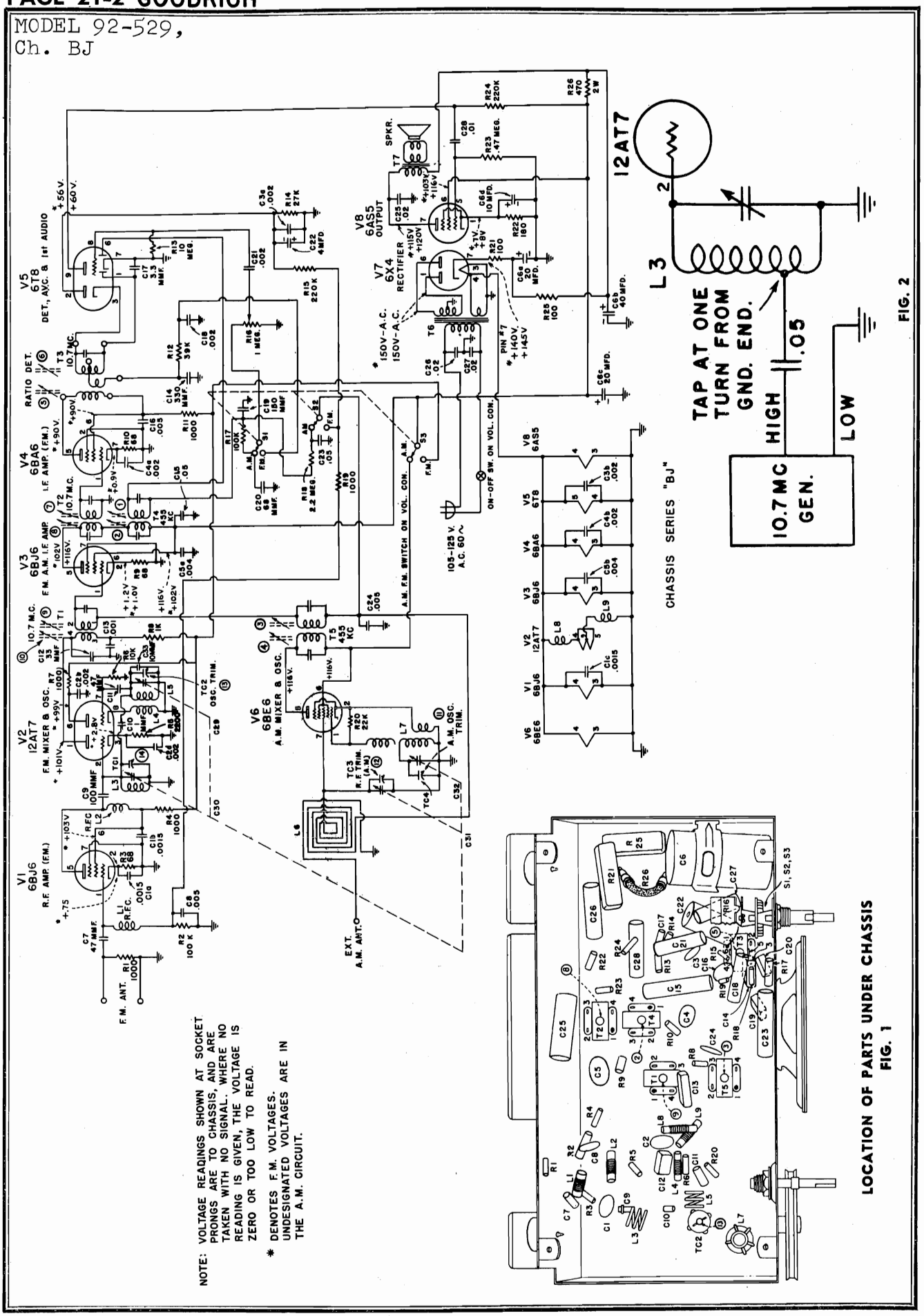

NOTE: VOLTAGE READINGS SHOWN AT SOCKET PRONGS ARE TO CHASSIS, AND ARE TAKEN WITH NO SIGNAL. WHERE NO READING IS GIVEN, THE VOLTAGE IS ZERO OR TOO LOW TO READ.

* DENOTES F.M. VOLTAGES. UNDESIGNATED VOLTAGES ARE IN THE A.M. CIRCUIT.

LOCATION OF PARTS UNDER CHASSIS
FIG. 1

©John F. Rider

Compliments of www.nucow.com

MODEL 92-529,
Ch. BJ

ALIGNMENT PROCEDURE

PRELIMINARY:

Output meter connection ..... Across speaker voice coil
Output meter reading to indicate 500 MW (Standard Output) ..... 1.27 volt
Generator modulation ..... 30% 400 cycles
Position of volume control ..... Fully clockwise
Set Dial Pointer ..... 1-3/32" from center of left shaft, variable condenser closed
Set band switch ..... To left for AM alignment; to right for FM alignment

AM ALIGNMENT

POSITION OF VARIABLE	GENERATOR FREQUENCY	DUMMY ANTENNA	GENERATOR CONNECTION HIGH SIDE	GENERATOR CONNECTION GROUND LEAD	ADJUST TRIMMERS IN ORDER SHOWN FOR MAX. OUTPUT	TRIMMER FUNCTION
Open	455 Kc	.05 Mfd	Mixer grid	Chassis	1, 2, 3, 4	I.F.
1620 Kc	1620 Kc		*Test loop	Test loop	11	Oscillator
1400 Kc	1400 Kc		*Test loop	Test loop	12	Antenna
**600 Kc	600 Kc		*Test loop	Test loop	Check-point	Antenna

*Connect generator lead to a Standard Hazeltine Test Loop, Model 1150, placed two feet from the set loop, or three turns of wire about six inches in diameter, placed about one foot from the set loop.

**With a generator signal of 600 Kc, tune the set to the point where maximum output is obtained, which should be approximately 600 Kc on the dial. Adjust antenna section plates of variable for maximum output.

The alignment procedure should be repeated in the original order for greatest accuracy.

Always keep the output from the signal generator at its lowest possible value to make the A. V. C. action of the receiver ineffective.

FM ALIGNMENT

DETECTOR AND IF ALIGNMENT USING SIGNAL GENERATOR AND OSCILLOSCOPE

1. Connect vertical input of scope across volume control of receiver (Grounded terminal to chassis, ungrounded terminal to high side of the control).
2. Connect FM Generator, High Side, to grid of 2nd IF tube through .01 mfd. dummy, Low Side, to chassis.
3. Connect sweep voltage of generator to horizontal terminals of scope.
4. Set generator frequency to 10.7 Mc modulated either 60 cycles or 400 cycles, 250 Kc sweep (125 Kc deviation).
5. Set volume control to maximum, variable condenser fully open, band switch to right (FM).
6. Adjust detector primary slug #5 for maximum vertical sweep of the scope pattern.
7. Adjust detector secondary slug #6 for symmetry of the pattern. Pattern should look like Fig. 4, with the same amount of curve on both ends.
8. Connect generator, high side, to mixer coil as in Fig. 2, low side to chassis.
9. Short A. V. C. to chassis at junction of R15 and R19.
10. Disconnect the negative lead of C22 from pin #2 of 6T8.
11. Connect vertical input of scope across R14. (Grounded terminal to chassis, ungrounded terminal to high side of resistor.)
12. Adjust IF slugs 7, 8, 9, 10 for greatest vertical sweep of the pattern. Stagger tune (detune) slightly so that pattern looks like Fig. 7.
13. Resolder the negative lead of condenser disconnected after alignment is completed.

NOTE: A double trace pattern, as in Fig. 5 or Fig. 6 for detector alignment, or Fig. 8 for IF alignment, may be caused by a slight out of phase condition between the sweep voltage to the horizontal terminals of the scope and the modulation on the generator signal. To correct this condition, connect a condenser of about .0005 mf. across the horizontal input terminals of the scope and a 1 megohm variable resistance in series with the lead to the ungrounded terminal. Adjust the resistance until the two traces coincide.

DETECTOR ALIGNMENT USING SIGNAL GENERATOR AND VTVM

POSITION OF VARIABLE	GENERATOR FREQUENCY	DUMMY ANTENNA	GENERATOR CONNECTION HIGH SIDE	GENERATOR CONNECTION GROUND LEAD	ADJUST TRIMMERS IN ORDER SHOWN	TRIMMER FUNCTION
Open	10.7 Mc	.01 Mfd.	2d IF grid	Chassis	#*5, #*6	Detector

#*5 is adjusted for maximum A. V. C. voltage. A vacuum tube voltmeter or a 20,000 ohm per volt voltmeter with a low V. range can be used to measure the A. V. C. voltage. Connect negative lead to junction of R15 and R19 on band switch and positive lead to the chassis.

#*6 is adjusted for zero reading of a vacuum tube voltmeter or a 20,000 ohm per volt voltmeter, connected as shown in Fig. 3. Rock this adjustment through the zero point to see that the voltage is positive on one side of the zero point and negative on the other.

NOTE: If a 10.7 Mc FM generator is not available for alignment of detector, an unmodulated signal of 10.7 Mc from an accurately calibrated conventional AM type generator can be used. (Voltmeter alignment only).

I.F. alignment using signal generator and V.T.V.M. not recommended.

RF

POSITION OF VARIABLE	GENERATOR FREQUENCY	DUMMY ANTENNA	GENERATOR CONNECTION HIGH SIDE	GENERATOR CONNECTION GROUND LEAD	ADJUST TRIMMERS IN ORDER SHOWN	TRIMMER FUNCTION
Open	109 Mc	300 Ohm	Ant. Term.	Ant. Term.	#13	Oscillator
Closed	87.5 Mc	300 Ohm	Ant. Term.	Ant. Term.	Spacing of L-5	Oscillator

Repeat the above oscillator adjustments until proper coverage is obtained on both ends of band since the two adjustments effect each other.

106 Mc	106 Mc	300 Ohm	Ant. Term.	Ant. Term.	#14	RF
90 Mc	90 Mc	300 Ohm	Ant. Term.	Ant. Term.	Spacing of L-3	RF

Repeat "RF and Ant." adjustments until proper tracking is obtained at both 90 and 106 Mc, since tracing the set at one frequency effects the tracking at the other frequency.

All RF trimmers are adjusted for maximum output, measured with output meter across speaker voice coil.

For RF alignment, use FM generator signal modulated with 400 cycles 45 Kc sweep (22.5 Kc deviation).

©John F. Rider

Compliments of www.nucow.com

MODEL 92-529,
Ch. BJ

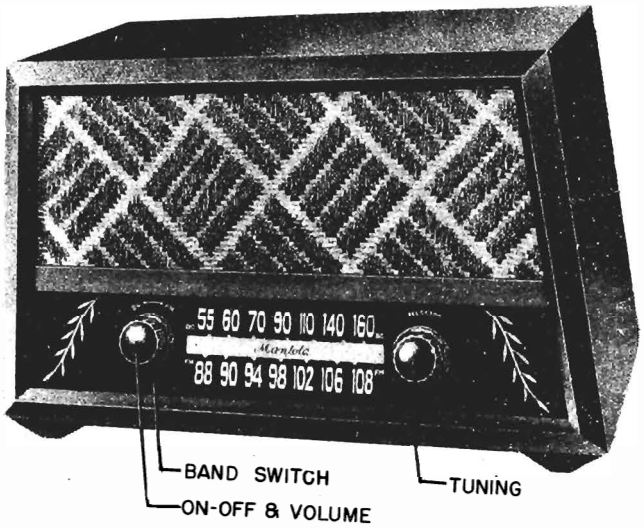

HIGH SIDE OF VOL. CONTROL

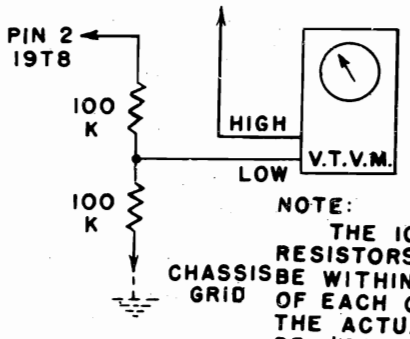

FIG. 3

NOTE: THE 100,000 OHM RESISTORS USED SHOULD BE WITHIN 2% TOL. OF EACH OTHER, BUT THE ACTUAL VALUE MAY BE ±20%

OSCILLOSCOPE PATTERNS

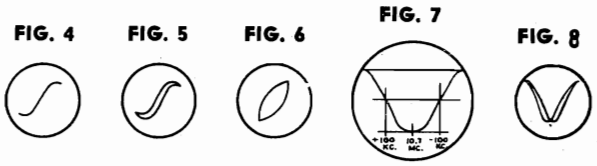

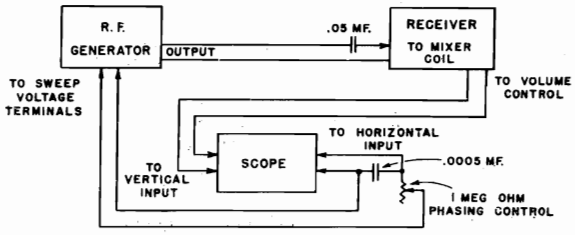

BLOCK DIAGRAM FOR I.F. AND DETECTOR ALIGNMENT USING SIGNAL GENERATOR AND OSCILLOSCOPE.
FIG. 9

DIAL STRING ARRANGEMENT
FIG. 10

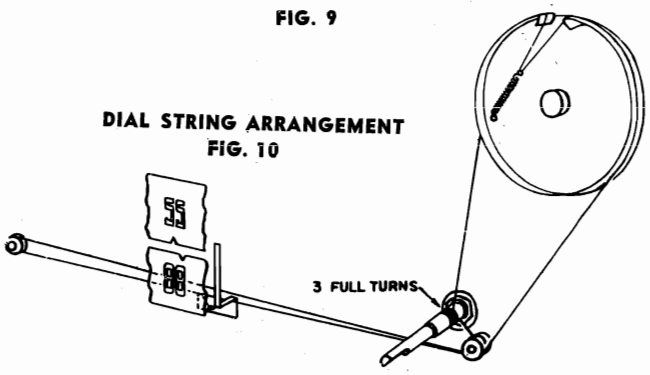

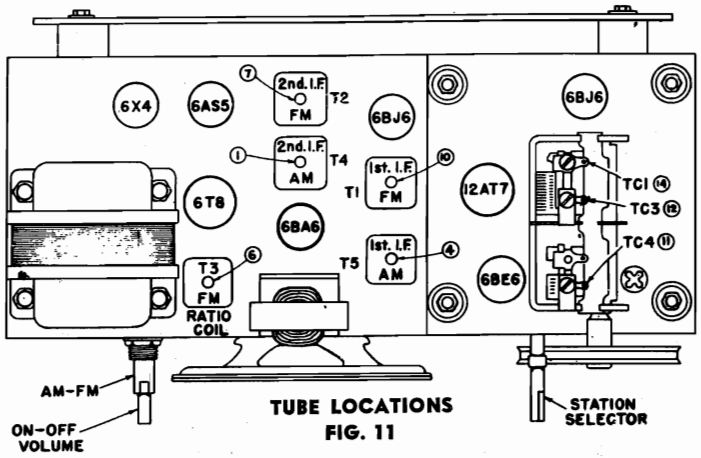

TUBE LOCATIONS
FIG. 11

Schematic Location	Part Number	Description
C17	CC-3.3-11	Capacitor, 3.3 MMF +10%
C29, 30, 31, 32 } TC1, TC3, TC4 }	CV-17	{Capacitor, Variable (AM-FM) {Capacitors, Trimmer
C26, 27	CP-203-1	Capacitor, .02 — 400 V. Paper
R1, 4, 7, 8, 11, 19	RC-102-1	Resistor, 1000 ohms ½W 20%
R2, 17	RC-104-1	Resistor, 100,000 ohms ½W 20%
R3, 9, 10	RC-680-2	Resistor, 68 ohms ½W +10%
R5	RC-222-2	Resistor, 2200 ohms ½W +10%
R6	RC-103-2	Resistor, 10,000 ohms ½W +10%
R18	RC-225-1	Resistor, 2.2 Meg ohms ½W 20%
R22	RC-181-2	Resistor, 180 ohms ½W +10%
R14	RC-273-2	Resistor, 27,000 ohms ½W +5%
R21, 25	RW-101-8	Resistor, 100 ohms W.W. 2W +10%
R12	RC-393-2	Resistor, 39,000 ohms ½W 10%
R13	RC-106-1	Resistor, 10 Meg ohms ½W 20%
R16	VC-17	Control, On-Off & Volume 1 meg Includes S1, S2, S3-D.T. Switch
R15, 24	RC-224-1	Resistor, 220,000 ohms ½W 20%
R20	RC-223-1	Resistor, 22,000 ohms ½W 20%
R23	RC-474-1	Resistor, .47 Meg ohms ½W 20%
R26	RW-471-8	Resistor, 470 ohms 2W W.W. +10%
L6	LP-22-D	Loop Antenna
	CB-124-D	Cabinet
	BF-21-D	Baffle
	MS-129-D	Brass Angle
	DL-34-D	Plastic Dial
	PN-17	Dial Pointer
	KN-28	Knob Assembly
	KN-26	Knob, Large
	KN-27	Knob, Small
	IB-29	Instruction Booklet
	PY-3	Drive Shaft Pulley
	SA-24	Drive Shaft
	SG-1	Dial Spring
	CR-2	Dial Cord
T7	SP41-10B	Speaker 4" P.M. & O.T.
T1	LF-30	Transformer, FM-IF
T5	LF-32	Transformer, AM-IF
T3	LF-33	Transformer, Ratio Det.
T2	LF-34	Transformer, FM-IF
T4	LF-35	Transformer, AM-IF
T6	TR-21	Transformer, Power
L7	LC-9	Coil, Oscillator AM
L5	LC-11	Coil, Oscillator FM
L3	LC-12	Coil, RF FM
L8, 9	LC-13	Choke, Filament
L2	LC-14	Choke, Plate
L1	LC-15	Choke, Grid
L4	LC-16	Choke, Cathode
TC-2	TA-3	Ceramic Trimmer 5-20 MMF
C2a, 2b, 3a } 3b, 4a, 4b }	CC-2-1	Capacitor, 2 x .002 MFD Ceramic
C5a, 5b	CC-2-2	Capacitor, 2 x .004 MFD Herlec
C8, 16, 24	CC-1-1	Capacitor, .005 MFD Herlec
C6a, 6b, 6c, 6d	CE-22	Capacitor, 20 x 40 x 20 (200V) x 10 (25V) Electrolytic
C1a, 1b, 1c	CC-3-0	Capacitor, 3 x .0015 Herlec
C18, 21	CP 202-2	Capacitor, .002 MFD 400 V.
C7, 11	CC-047-8	Capacitor, 47 MMF Ceramic 10%
C9	CC-101-7	Capacitor, 100 MMF Ceramic 20%
C-33	CMS-010-8	Capacitor, 10 MMF Silver Mica 10%
C12	CMS-033-9	Capacitor, 33 MMF Silver Mica 5%
C13	CM-102	Capacitor, .001 MFD Mica
C10	CSP-1	Capacitor, 1 MMF 10%
C20	CC-068-7	Capacitor, 68 MMF Ceramic +20%
C19	CM-151-1	Capacitor, 150 MMF Mica 20%
C14	CM-331-8	Capacitor, 330 MMF Mica +10% 500 V.
C15, 23	CP-503-1	Capacitor, .05 MFD 400 V.
C22	CE-19	Capacitor, 4 MFD 50 W.V. Electrolytic
C25	CP-203-20	Capacitor, .02 MFD 800V.
C28	CP-103-1	Capacitor, .01 MFD 400 V.

©John F. Rider

Compliments of www.nucow.com

MODEL 92-753,
Ch. BF

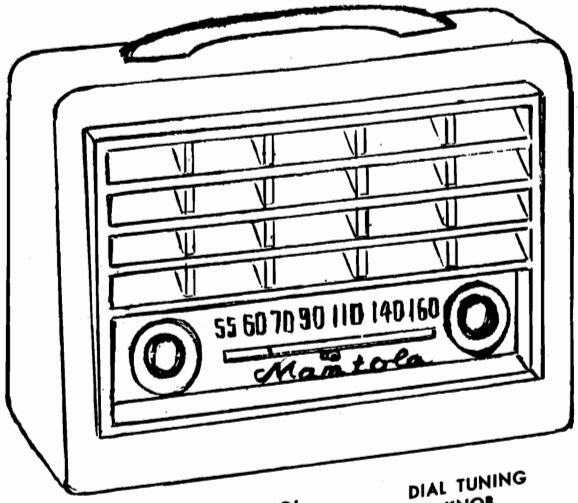

VOLUME CONTROL and ON-OFF SWITCH

DIAL TUNING KNOB

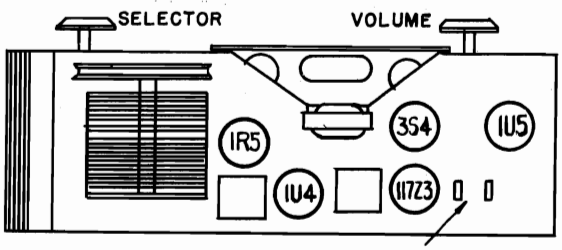

INSERT LINE CORD PLUG HERE FOR BATTERY OPERATION

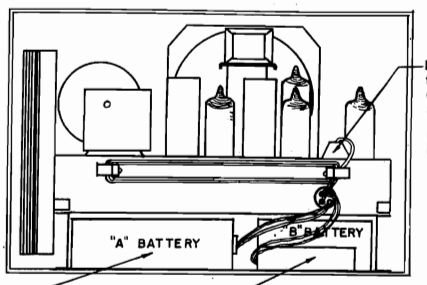

Line cord plug shown in position for battery operation, with line cord wrapped around line cord retainers.

For A.C.-D.C. operation remove plug from chassis, unwrap cord and bring out of notch in side of cover.

Insert two-prong plug into "A" BATTERY. Make sure large pin engages large contact in battery. Excessive force is not required to push plug into battery.

Place "B" BATTERY so that contacts are toward bottom. Snap fasteners onto battery.

POWER SUPPLY

This receiver is designed to operate on either an A.C. or D.C. power supply. The following operation ratings should be observed:

Voltages.....105 - 125 Volts, A.C. or D.C.

Frequency.....50 to 60 cycles on A.C.

If in doubt as to the voltage and frequency supplied to your home, telephone your local Power Company.

When operating on a D.C. source, it is necessary to insert the power plug with the proper polarity. If the set fails to function after an interval sufficient for the tubes to reach their operating temperature, reverse the power plug in the outlet.

The battery supply to be used with this receiver is as follows:

"A" supply.....4½ volts
Eveready No. 746 "A" Battery or equivalent.

"B" supply.....67½ volts
Eveready Minimax "B" Battery No. 467 or equivalent.

CAUTION

Always remove the power cord from its receptacle before starting to replace tubes or batteries.

Do not allow cells which have become too weak to operate the set properly to remain in the set for any length of time.

ELECTRICAL SPECIFICATIONS

Power Supply.....105-125 volts DC or 50-60 cycles AC
15 watts

Batteries.....A—4½ volts. 100 ma.
B—67½ volts. 8 ma. average.

Frequency Range.....532.5 to 1620 kc.

Intermediate Freq......455 kc.

Tuning.....Two-gang capacitor

Antenna.....Built-in loop

Speaker.....4 inch PM; voice coil Impedance 3.5 ohms.

Power Output..... 80 milliwatts undistorted
140 milliwatts maximum

Sensitivity.....750 microvolts per meter for 50 milliwatt output

Selectivity..... 55 kc broad at 1000 times signal at 1000 kc.

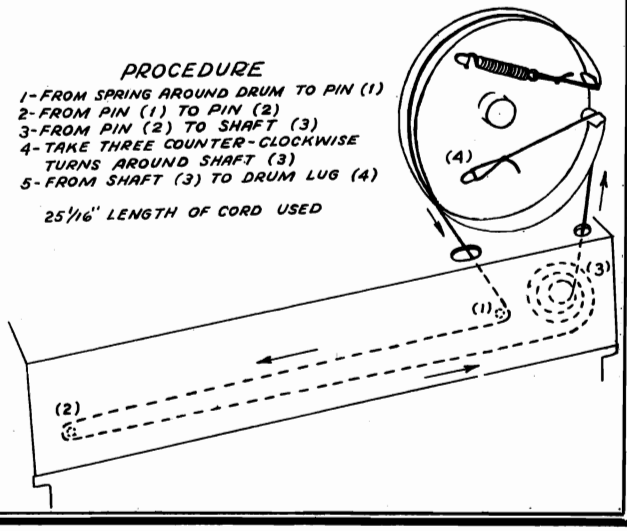

©John F. Rider

Compliments of www.nucow.com

MODEL 92-753,
Ch. BF

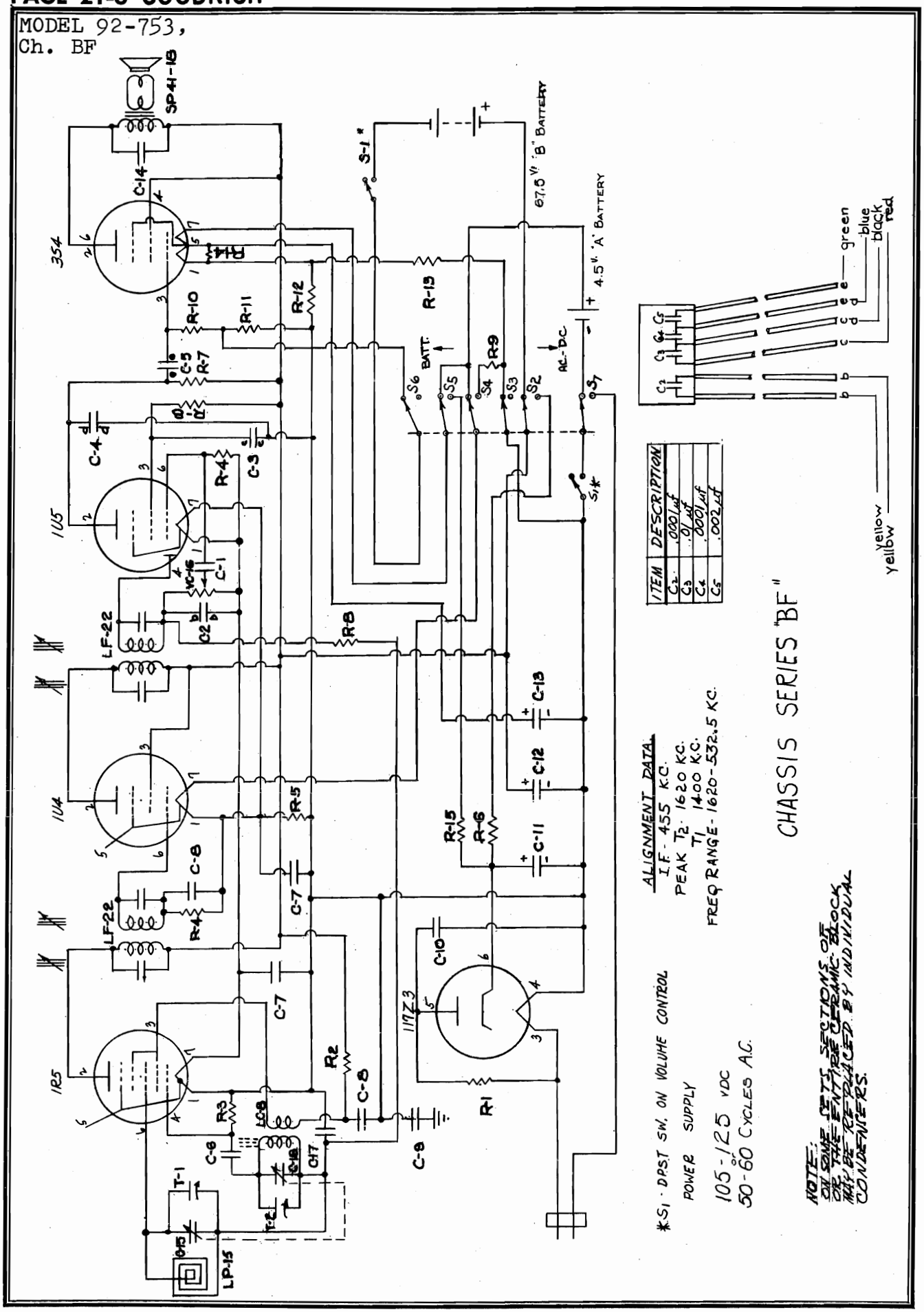

©John F. Rider

Compliments of www.nucow.com

MODEL 92-753,
Ch. BF

ALIGNMENT PROCEDURE

- Output meter across 3.2 ohm output load.
- Volume control at maximum for all adjustments.
- Align for maximum output. Reduce input as needed to keep output near 0.4 volts.

SIGNAL GENERATOR				*SETTING TUNER*	*ADJUST TRIMMERS TO MAXIMUM OUTPUT (in order shown)*
Frequency	*Coupling Factor*	*Connection to Receiver*	*Ground Connection*		
455 kc	.1 mfd	1R5 Grid	B—	Rotor full open (Plates out of mesh)	Input and output trimmers on IF cans
1620 kc	.1 mfd	1R5 Grid	B—	Rotor full open (Plates out of mesh)	Oscillator trimmer T2
1400 kc		Radiating Loop		1400 kc*	Antenna trimmer T1

* Five markings on the dial bracket represent respectively 532½, 600 kc., 1000 kc., 1400 kc. and 1620 kc., reading from left to right. These points are to be used for the alignment of the receiver.

REPLACEMENT PARTS LIST

When ordering parts, specify part number, model number and series.

Ref. No.	*Part No.*	*Description*
		CAPACITORS
C1	CP-102-3	.001 mfd, 200 volt, paper
C1-C2-C3, C4-C5	CC-5-2	ceramic condenser block
C6	CM-470-1	.000047 mfd, Mica Cond.
C7	CP-503-2	.05 mfd, 150 volt, paper
C8	CP-103-2	.01 mfd, 150 volt, paper
C9	CP-104-1	.1 mfd, 200 volt, paper
C10, C17	CP-503-1	.05 mfd, 400 volt, paper
C11	CE-17	Elect. con. 40 mfd, 150 volt
C12		Elect. con. 40 mfd, 150 volt
C13		Elect. con. 200 mfd, 10 volt
C14	CP-502-2	.005 mfd, 400 volt, paper
C15, C16	CV-15	Variable condenser
T1, T2		Trimmers on variable
C18	CP-103-7	.01 mfd, 400 volt, paper
		RESISTORS
R1	RC-180-1	18 ohms, ½ watt 20%
R2	RC-153-1	15,000 ohms, ½ watt 20%
R3	RC-104-1	100,000 ohms, ½ watt 20%
R4	RC-106-1	10 megohms, ½ watt 20%
R5	RC-222-2	2,200 ohms, ½ watt 10%
R6	RC-682-5	6800 ohms, 1 watt 10%
R7	RC-105-1	1 megohm, ½ watt 20%
R8	RC-335-1	3.3 megohms, ½ watt 20%
R9	RC-390-2	39 ohms, ½ watt 10%
R10	RC-225-1	2.2 megohms, ½ watt 20%
R11	RC-681-2	680 ohms, ½ watt 10%
R12	RC-152-2	1500 ohms, ½ watt 10%
R13	RC-270-3	27 ohms, ½ watt 5%
R14	RC-391-2	390 ohms, ½ watt 10%
R15	RP-5	Candohm Res., 2550 ohms. ±5%

Ref. No.	*Part No.*	*Description*
		COILS AND TRANSFORMERS
	LC-8	Oscillator coil
	LF-22	IF transformer
	LP-15	Loop antenna
		MISCELLANEOUS
	VC-16	Vol. Control, 1 meg., D.P.S.T., S.W.
S2, 3, 4, 5, 6, 7	SW-11	Battery Switch, 6 Pole, D.T.
	SP-41-18	4 inch Speaker, 1 oz. Mag., O.T.
	PN-16	Pointer
	CR-2	Drive cord
	SG-1	Spring for drive cord
	KN-24	Knob
	CB-112A	Assembled cabinet (without back and handle)
	HA-2	Handle for cabinet

©John F. Rider

Compliments of www.nucow.com

Compliments of www.nucow.com

MODELS S-38A, S-38B

GENERAL

Tubes ..... Four plus rectifier.

Speaker ..... 5-inch PM.

Voice Coil Impedance ..... 3.2 ohms.

Headset Output ..... Low impedance.

Antenna ..... Provisions for external antenna with transmission line or single wire feed.

Tuning ..... Manual

Tuning Range .....

Band Selector Position	Frequency Range
1	550 kc - 1650 kc.
2	1.7 mc - 5.1 mc.
3	5 mc - 14.5 mc.
4	13 mc - 31 mc.

Intermediate Frequency..... 455 kc.

Power Supply..... 105-125 V. DC or 60 cycles AC.

Power Consumption ..... 30 Watts

92X1153

CAUTION - The four rubber grommets insulate the chassis from the cabinet. Check the condition of these grommets and replace if necessary.

ALIGNMENT PROCEDURE

Holes in the bottom cover permit minor adjustment of the oscillator and mixer stage trimmers, however for complete alignment, the chassis will have to be removed from the cabinet. To separate the chassis from the cabinet, remove the back cover and bottom plate. The chassis is fastened to the cabinet by four front panel screws located near the slide switches and two cabinet screws located at the bottom rear of the cabinet.

The standard RMA dummy antenna specified in the alignment chart consists of a 200 mmf condenser in series with a 20 uh r-f choke which is shunted by a 400 mmf condenser in series with a 400 ohm carbon resistor.

Set the following controls before alignment.

AM/CW	Set at AM
SPEAKER/PHONES	Set at SPEAKER
VOLUME	Set at maximum
RECEIVE/STANDBY.....	RECEIVE
BAND SPREAD	Set at zero

For the settings of the remaining controls, see alignment chart.

ALIGNMENT CHART

Step	Dummy Antenna	Signal Generator Coupling	Signal Generator Frequency	Band Selector Setting	Receiver Dial Setting	Adjust	Remarks
1	.01 mfd cap.	Stator plates, front section of tuning gang.	455 kc	1	1000 kc	A,B,C,D	Adjust for max. audio output at speaker voice coil. Use just enough signal generator output to obtain a 50 mw signal level.
2**	See step 1	See step 1	455 kc (No modulation)	1	1000 kc	E	Set the AM/CW switch at CW. (Reset the switch at AM when step 2 is completed.) Correct BFO operation is obtained by varying the coupling between the wire "E" and the 12SK7 tube grid and plate terminals (Pins 4 and 8.) Pushing the wire toward the grid terminal increases the capacity and the strength of the beat.
3	Std. RMA dummy	High side to term. A1 on antenna strip. Jumper wire between A2 and G	30 mc	4	30 mc	*F,G	Max. output as in step 1.
4	Std. RMA dummy	See step 3.	14 mc	3	14 mc	*H,J	Max. output as in step 1.
5	Std. RMA dummy	See step 3	5 mc	2	5 mc	*K,L	Max. output as in step 1.
6	Std. RMA dummy	See step 3	1500 kc 600 kc	1	1500 kc 600 kc	*M,N *P	Max. output as in step 1.

* Note - Calibration adjustments.

** Note - This step is generally unnecessary. Adjustment should be made if a weak beat note is obtained on strong c-w signals indicating lack of coupling between wire "E" and tube socket wiring.

©John F. Rider

Compliments of www.nucow.com

MODELS S-38A,
S-38B

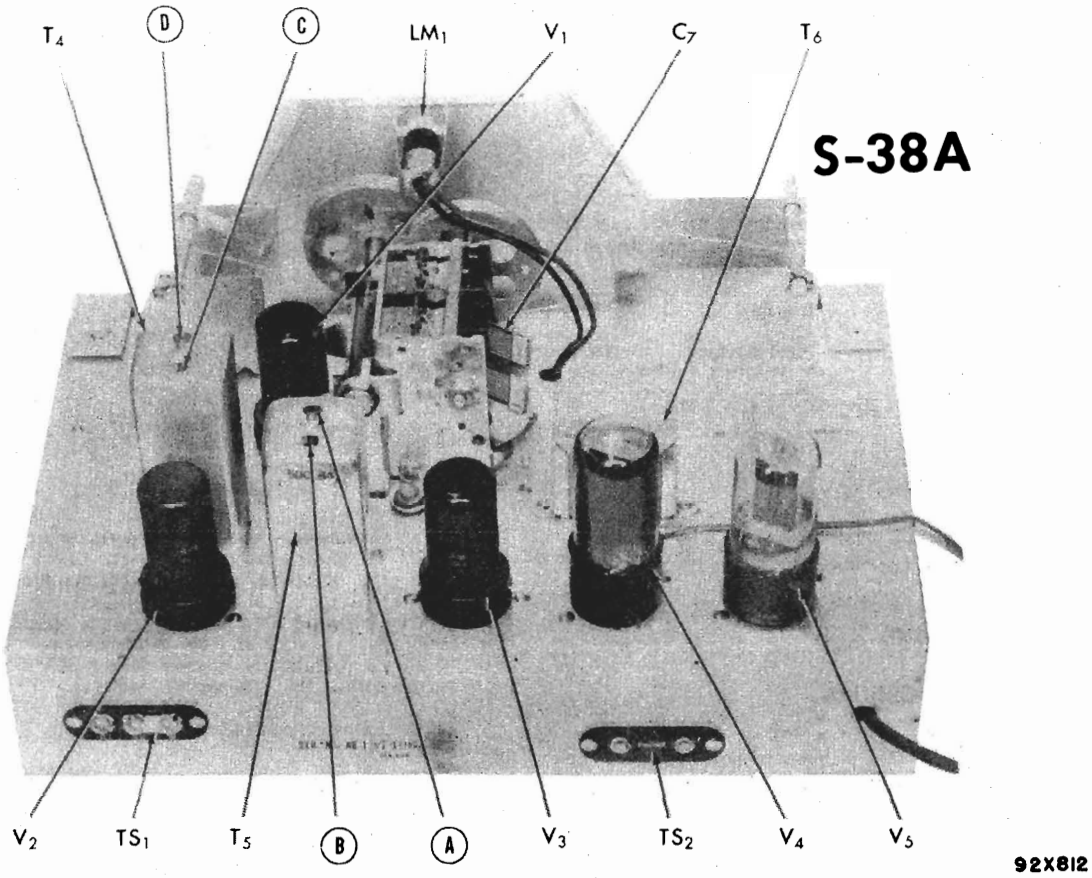

Fig. 2. Top view, alginment adjustments and component location

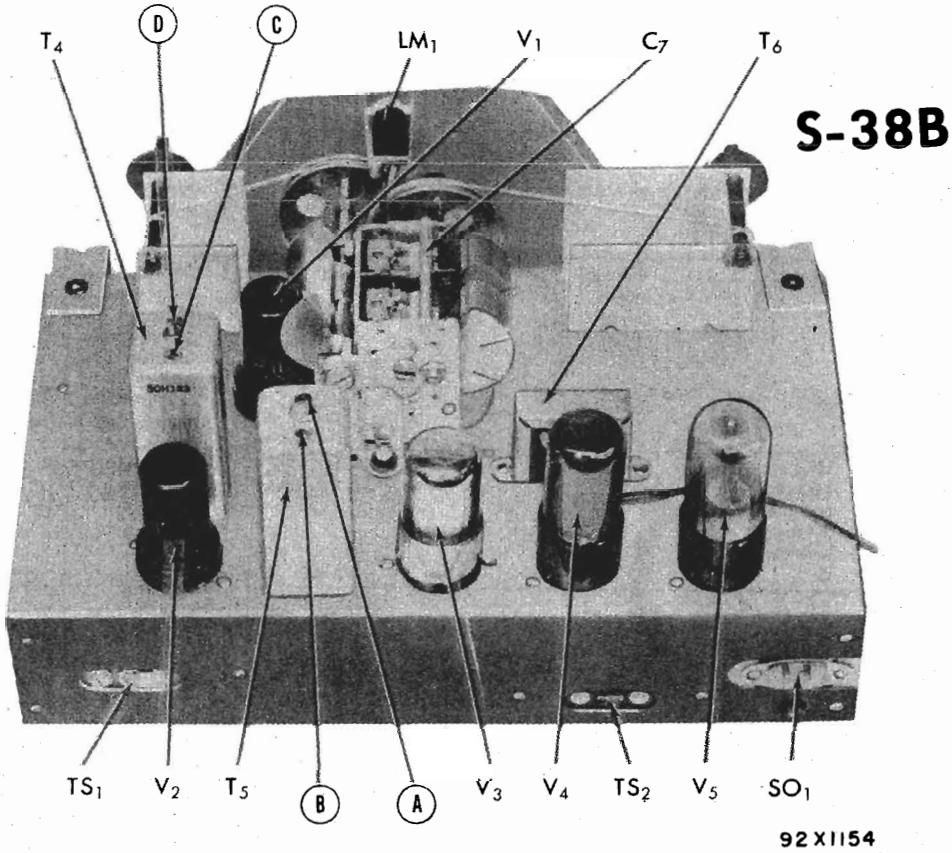

Fig. 2. Top view, alginment adjustments and component location

©John F. Rider

Compliments of www.nucow.com

MODELS S-38A, S-38B

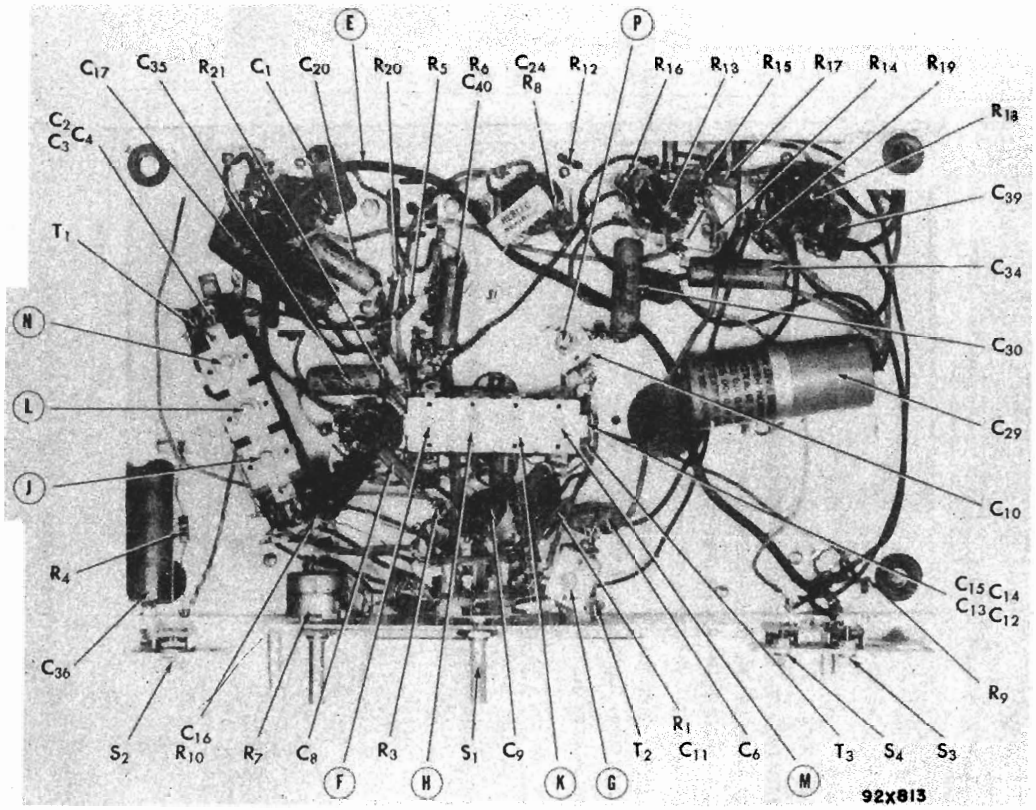

Fig. 3. Bottom view, alignment adjustments and component location

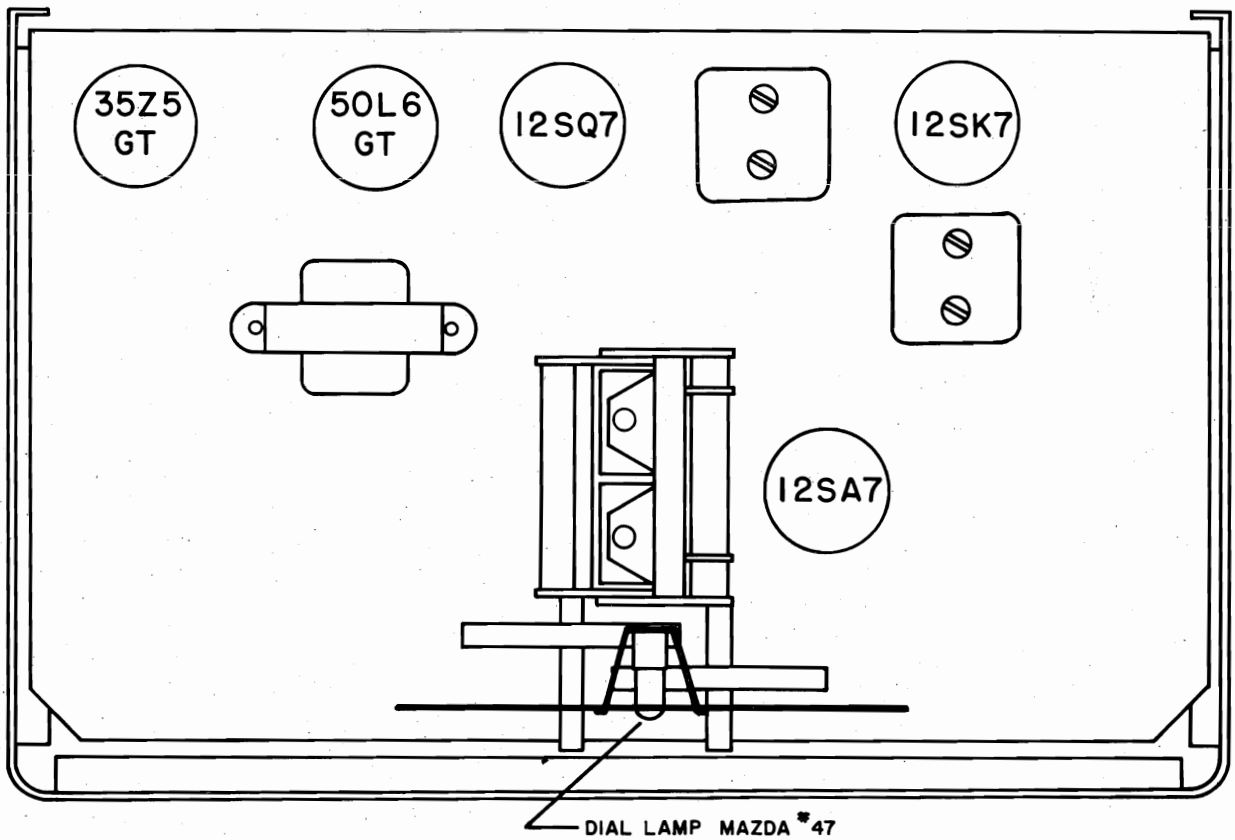

Fig. 4. Top view, location of tubes and dial lamps.

©John F. Rider

Compliments of www.nucow.com

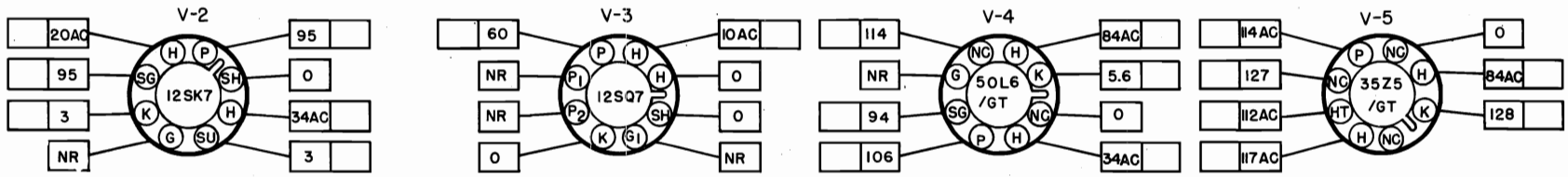

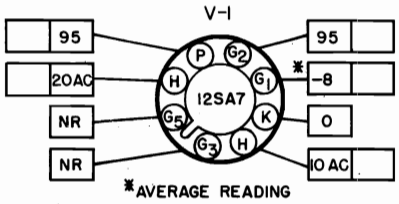

1. SOCKET VIEWS ARE BOTTOM VIEWS.
2. ALL VOLTAGES ARE MEASURED BETWEEN TUBE SOCKET TERMINALS & CHASSIS, WITH ZERO SIGNAL INPUT.
3. LINE VOLTAGE—117 V. AC. AC VOLTAGES WILL BE DC VOLTAGES WHEN OPERATING FROM A DC SOURCE.
4. ALL VOLTAGES SHOWN ARE DC UNLESS OTHERWISE SPECIFIED.
5. DC VOLTAGES SHOWN WERE MEASURED WITH AN ELECTRONIC VOLTMETER.
6. "NC" NO CONNECTION. (VOLTAGES SHOWN FOR THIS TERMINAL ONLY WHEN TERMINALS ARE USED AS A TIE LUG.)
7. "NR" NOT READABLE (READING GENERALLY MEANINGLESS)
8. ☐ SPACE PROVIDED FOR SERVICE METER READINGS.

92C786

Fig. 5. Tube socket voltage chart.

RESTRINGING DIAL CORD

To restring the general coverage tuning dial cord cut a 14-inch length of 30 lb. test dial cord and tie one end to the tension spring at position "1" on the diagram. Follow the sequence "1" through "15", and at position "15" stretch the tension spring and tie the cord securely.

To restring the band spread tuning dial cord, cut a 16-inch length of dial cord and follow the procedure as above, starting at position "A" on the diagram. Note that the tuning drive shafts are wrapped with two and a fraction turns of dial cord for proper traction.

REPLACING LAMPS

Refer to Fig. 4, for the location of the dial lamp used in receiver. To gain access to the defective lamp, reach in through the rear of the cabinet (cover removed) and unclip the dial lamp socket by compressing the side springs. The socket may then be brought out into the open to change the defective lamp. Replace defective lamps with 6-8 V. Mazda #47 (Brown bead) lamps or equivalent.

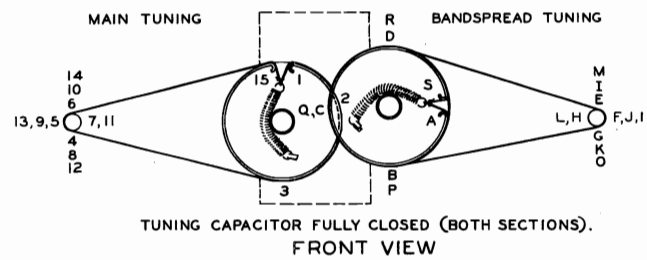

92X814

Fig. 1. Dial cable stringing procedure.

©John F. Rider

Compliments of www.nucow.com

MODELS S-38A, S-38B

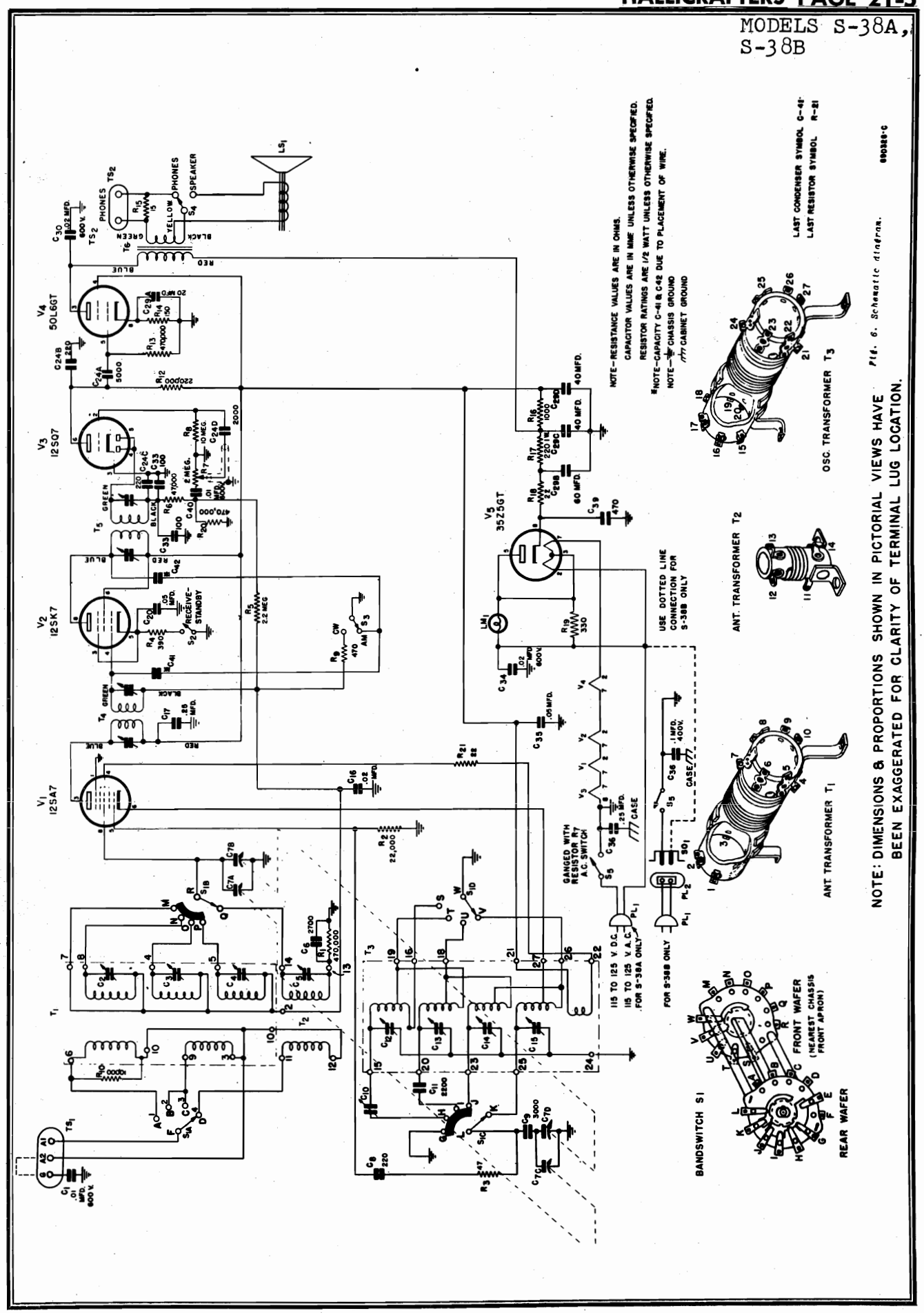

Fig. 6. Schematic diagram.

©John F. Rider

Compliments of www.nucow.com

MODELS S-38A,
S-38B

SERVICE PARTS LIST

CONDENSERS

Ref. No.	Description	Manufacturer's Part Number
C-1,40	.01 mfd. 600 V., tubular	46AY103J
C-2,3,4	Trimmers, adjustable (Part of transformer T-1)	
C-5	Trimmer, adjustable (For transformer T-2)	44A039
C-6	2700 mmf 500 V, mica	47X30A272J
C-7	Tuning condenser, 2 sections	48C162-1
C-8	220 mmf 500 V, mica	47X20A221K
C-9	3000 mmf 500 V, mica	47X30A302J
C-10	Padder, adjustable (Band 1)	44A349
C-11	2200 mmf 500 V, mica	47X30A222J
C-12,13, 14,15	Trimmers, adjustable (Part of transformer T-3)	
C-16	.02 mfd 400 V, tubular	46AW203J
C-17	.25 mfd 200 V, tubular	46AT254J
C-20,35	.05 mfd. 200 V, tubular	46AU503J
C-24	Capacitor, composite; 5,000, 2X220, and 2000 mmf; 500 V.; ceramic	46A151
C-29	60-40-40 mfd 150 V, 20 mfd. 25 V, electrolytic	45B091
C-30,34	.02 mfd 600 V, tubular	46AY203J
C-33	100 mmf. 500 V, mica	47X20B101K
C-36	.1 mfd. 400 V., tubular	46AV104J
C-39	470 mmf 500 V, mica	CM20A471M
C-41,42	Wiring capacity	

RESISTORS

Ref. No.	Description	Manufacturer's Part Number
R-1,13,20	470,000 ohms 1/2 watt, carbon	23X20X474M
R-2	22,000 ohms 1/2 watt, carbon	23X20X223M
R-3	47 ohms 1/2 watt, carbon	23X20X470M
R-4	390 ohms 1/2 watt, carbon	23X20X391K
R-5	2.2 megohms 1/2 watt, carbon	23X20X225M
R-6	47,000 ohms 1/2 watt, carbon	23X20X473M
R-7	Resistor, variable; VOLUME control	25B896
R-8	10 megohms 1/2 watt, carbon	23X20X106M
R-9	470 ohms 1/2 watt, carbon	23X20X471K
R-10	10,000 ohms 1/2 watt, carbon	23X20X103M
R-12	220,000 ohms 1/2 watt, carbon	23X20X224M
R-14	150 ohms 1/2 watt, carbon	23X20X151K
R-15	15 ohms 1/2 watt, carbon	23X20X150M
R-16	1000 ohms 1/2 watt, carbon	23X20X102M
R-17	220 ohms 1 watt, carbon	23X30X221M
R-18,21	22 ohms 1/2 watt, carbon	23X20X220M
R-19	330 ohms 1/2 watt, carbon	23X20X221M

TRANSFORMERS AND COILS

Ref. No.	Description	Manufacturer's Part Number
T-1	Transformer, antenna stage, Bands 1, 2 and 3	51C821
T-2	Transformer, antenna stage, Band 4	51B1015
T-3	Transformer, oscillator stage, Bands 1, 2, 3 and 4	51C822
T-4	Transformer, i-f amp. stage	50B183
T-5	Transformer, i-f amp. stage (diode)	50B184
T-6	Transformer, audio output	55A127

SWITCHES

Ref. No.	Description	Manufacturer's Part Number
S-1	Bandswitch assembly	60C393
S-2	Switch, slide; RECEIVE-STANDBY	60A244
S-3,4	Switch, slide; SPST; AM-CW & SPEAKER-PHONES	60A243
S-5	Switch, power (Part of VOLUME control R-7)	

CONNECTORS

Ref. No.	Description	Manufacturer's Part Number
PL-1	Line cord (Includes PL-2)	87B1668-1
TS-1	Terminal strip, antenna	88A671
TS-2	Headset, jack	88A071
SO-1	Socket, a-c	10A286
	Socket, octal (tube)	6A250
	Socket, dial light	86A011

TUBES, RECTIFIERS AND LAMPS

Ref. No.	Description	Manufacturer's Part Number
V-1	Type 12SA7, mixer/oscillator	90X12SA7
V-2	Type 12SK7, i-f amplifier & BFO	90X12SK7
V-3	Type 12SQ7, detector & 1st audio amplifier	90X12SQ7
V-4	Type 50L6GT, audio power amplifier	90X50L6GT
V-6	Type 35Z5GT, rectifier	90X35Z5GT
LM-1	Lamp, dial light, Mazda #47	39A004

CABINET PARTS

Ref. No.	Description	Manufacturer's Part Number
	Clip, coil mtg (For transformer T-2)	76A362
	Shaft, main tuning	74A318
	Shaft, bandspread	74A319
	Washer, spring (for main tuning and bandspread drive shafts)	4A043
	Spring, retainer ("C" washer type)	75A062
	Dial cord	38A019
	Spring, dial cord	75A012
	Pointer, main tuning	82A177
	Pointer, bandspread tuning	82A103
	Dial scale	83C373
	Knob, VOLUME control and BAND SELECTOR	15A049
	Knob, TUNING and BAND-SPREAD	15A047
LS-1	Speaker, PM	85C030
	Baffle, speaker	78B198
	Cabinet back	8C1139
	Cabinet bottom	8C1140
	Mounting foot, rubber	16A007
	Window, dial	22B311

©John F. Rider

Compliments of www.nucow.com

GENERAL

Tubes . . . . . Seven plus rectifier

Speaker . . . . . 5-inch PM

Speaker V.C. Impedance.. 3.2 ohms

Headset Output . . . . . High Impedance

Antenna . . . . . Provision for external antenna

Tuning . . . . . Manual

Tuning Range . . . . . .

Band Selector Position	Frequency Range
1.	540 kc - 1680 kc
2.	1680 kc - 5.4 mc
3.	5.3 mc - 15.5 mc
4.	15.5 mc - 44 mc

Intermediate Frequency . . 455 kc.

Power Supply . . . . . 105-125 V. DC or 60 cycles AC

Power Consumption . . . . 40 Watts

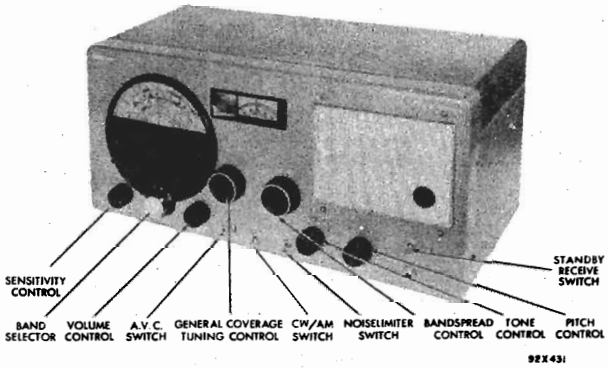

REPLACING LAMPS

Refer to Fig. 7 for the location of the two dial lamps used in the receiver. To gain access to defective lamps, reach in through cabinet cover and unclip the dial lamp sockets. The sockets may then be brought out into the open to change the defective lamp. Replace lamps with 6-8 V. Mazda #47 (Brown bead) lamps or equivalent.

RESTRINGING DIAL CORD

To restring the general coverage tuning dial cord, cut an 18-inch length of 30 lb. test dial cord and tie one end to the tension spring of the main tuning capacitor drive pulley at position "1" on the diagram. Follow the numbers "1" through "4", and at position "4" stretch the tension spring and tie the cord securely.

To restring the band spread tuning dial cord, cut a 36-inch length of dial cord and follow the procedure as above, starting at position "A" on the diagram. Note that the tuning drive shafts are wrapped with two and a fraction turns of dial cord for proper traction.

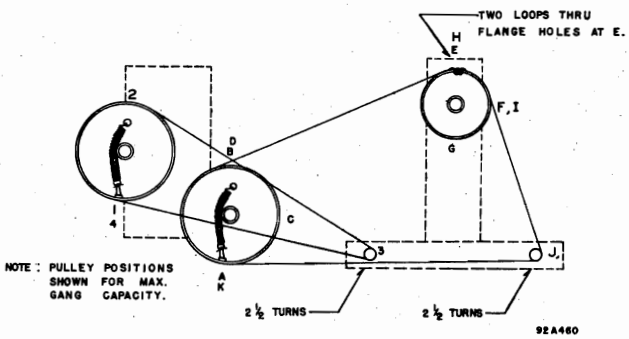

Fig. 1. Dial cable stringing procedure

ALIGNMENT PROCEDURE

It will be necessary to remove the receiver chassis from the cabinet to make alignment adjustments. The chassis is held in the cabinet by three screws along both the bottom edge of the front panel and the rear of the cabinet, and two screws on either side of the front panel.

Before starting the alignment procedure, check the position of the general coverage dial index marker on the low frequency end of the range and the bandspread dial on zero position. The general coverage condenser should index at max. capacity, and the bandspread condenser at min. capacity.

The standard RMA dummy antenna mentioned in the alignment chart consists of a 200 mmf. condenser in series with a 20 uh r-f choke which is shunted by a 400 mmf condenser in series with a 400 ohm carbon resistor.

Set the following controls before alignment.

SENSITIVITY . . . . . Set at maximum

VOLUME. . . . . Set at maximum

AVC switch. . . . . Set at OFF

BAND SPREAD . . . . . Set at zero

CW/AM . . . . . Set at AM (See step 2)

NOISE LIMITER . . . . . Set at OFF

STANDBY RECEIVE. . . . . Set at RECEIVE

TONE SWITCH . . . . . Set at HIGH

For the settings of the remaining controls, see alignment chart.

©John F. Rider

Compliments of www.nucow.com

MODEL S-52

ALIGNMENT CHART

Step	Dummy Antenna	Signal Generator Coupling	Signal Generator Frequency	Band Switch Setting	Receiver Dial Setting	Adjust	Remarks
1	None	Stator plates in center section of tuning gang.	455 kc	"1"	1000 kc	A, B, C, D, E, F	Maximum audio output at speaker voice coil. Use just enough signal generator output to obtain a 50 mw signal level.
2	None	See step 1	455 kc (No modulation)	"1"	1000 kc	S1	With the CW/AM switch set at CW, remove the pitch control knob and adjust S1 for zero beat. Replace the knob with the dot in the center position.
3	Std RMA dummy	"A1" on antenna strip. Jumper connected between "A2" and "G"	36 mc	"4"	36 mc	*G, H, I	Maximum output as in step 1.
			18 mc		18 mc	*S2,S3,S4	
4	Std RMA dummy	See step 3	14 mc	"3"	14 mc	*J, K, L	Maximum output as in step 1.
			10 mc		10 mc	*S5, S6, S7	
5	Std RMA dummy	See step 3	5 mc	"2"	5 mc	*M, N, O	Maximum output as in step 1.
			1.8 mc		1.8 mc	*S8	
6	Std RMA dummy	See step 3	1500 kc	"1"	1500 kc	*P, Q, R	Maximum output as in step 1.
			600 kc		600 kc	*T	

*Note - Calibration adjustments.

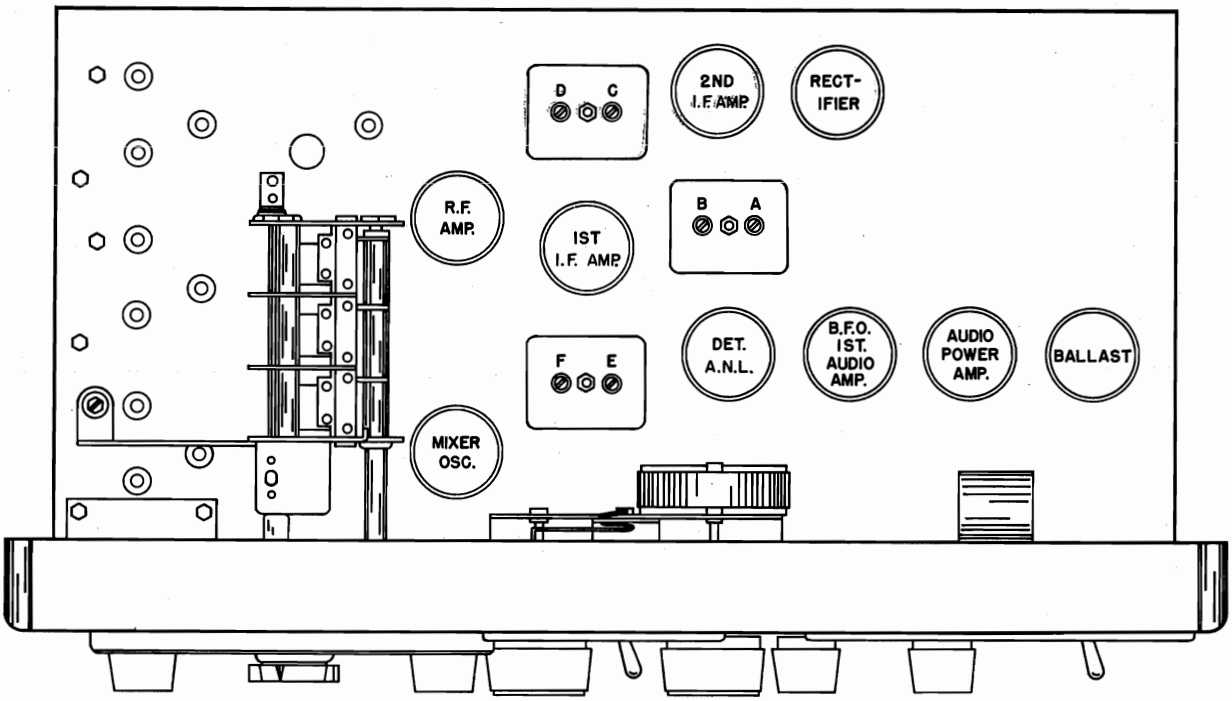

(92D462)

Fig. 2. Top view, alignment points

©John F. Rider

Compliments of www.nucow.com

MODEL S-52

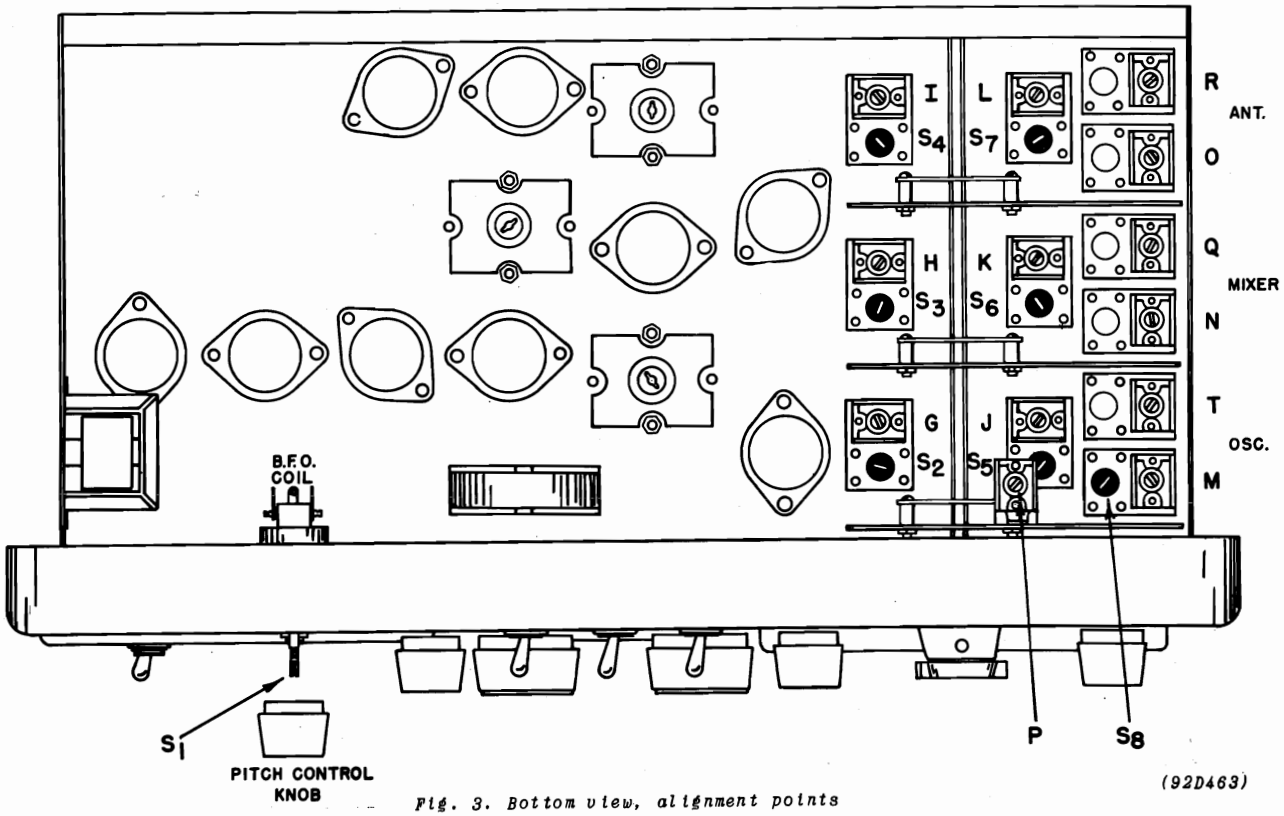

(92D463)

Fig. 3. Bottom view, alignment points

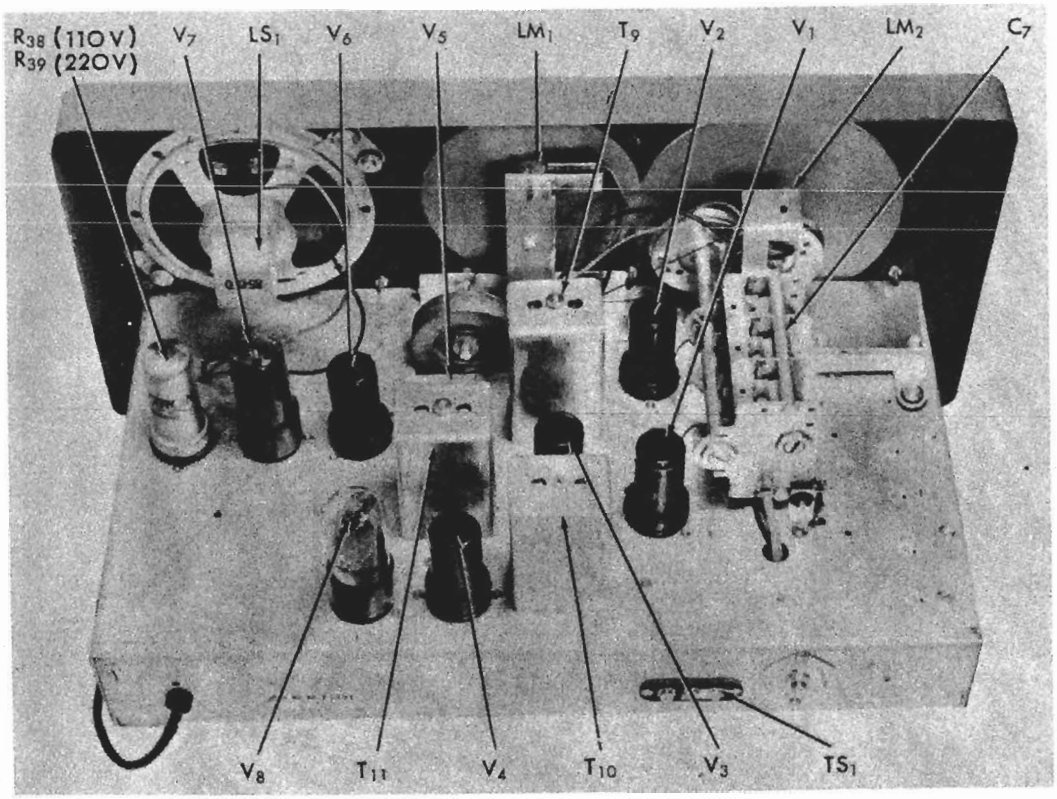

(92X467)

Fig. 4. Top view, component location

©John F. Rider

Compliments of www.nucow.com

MODEL S-52

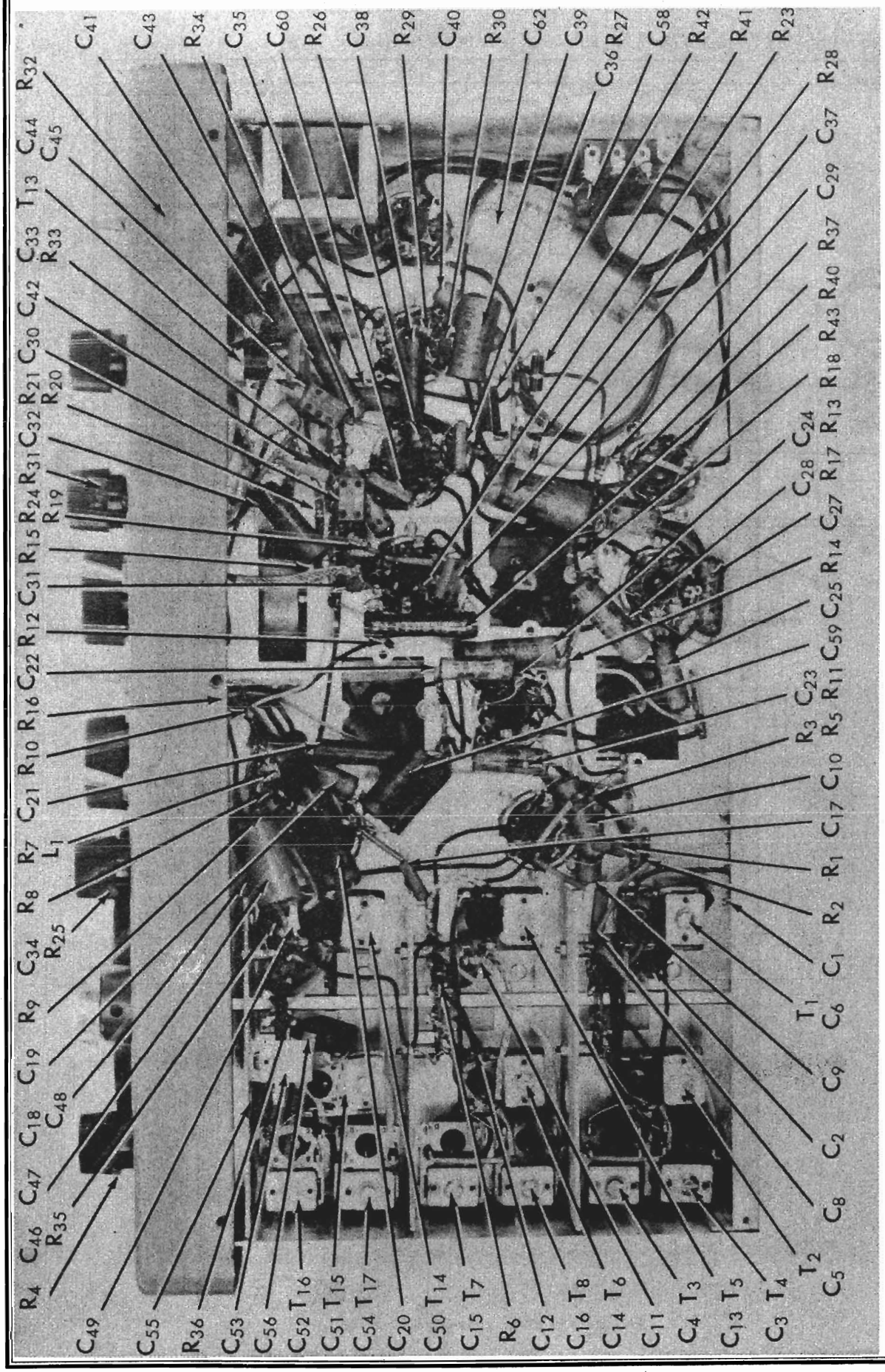

(92X461)

Fig. 5. Bottom view, component location

©John F. Rider

Compliments of www.nucow.com

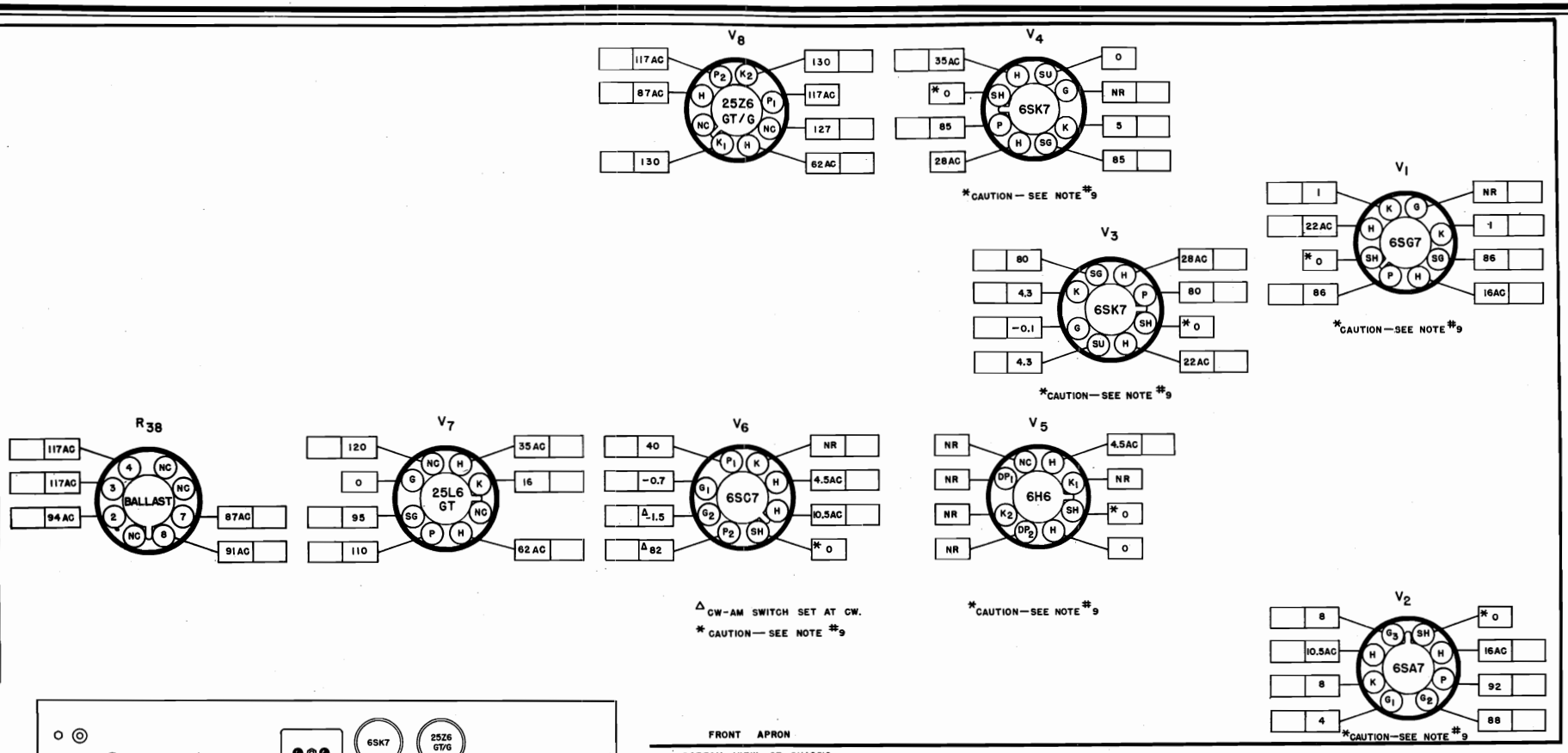

NOTES—

1. SOCKET VIEWS ARE BOTTOM VIEWS.
2. ALL VOLTAGES ARE MEASURED BETWEEN TUBE SOCKET TERMINALS AND THE ELECTRICAL GROUND BUSS (NOT CHASSIS) WITH ZERO SIGNAL INPUT.
3. LINE VOLTAGE—117 V. AC. AC VOLTAGES WILL BE DC VOLTAGES WHEN OPERATING FROM A DC SOURCE.
4. ALL VOLTAGES SHOWN ARE DC UNLESS OTHERWISE SPECIFIED.
5. DC VOLTAGES SHOWN WERE MEASURED WITH AN ELECTRONIC VOLTMETER.
6. "NC"—NO CONNECTION. (VOLTAGE SHOWN FOR THIS TERMINAL ONLY WHEN TERMINALS IS USED AS A TIE LUG).
7. "NR"—NOT READABLE (READING GENERALLY MEANINGLESS).
8. [ ] SPACE PROVIDED FOR SERVICE METER READINGS.
9. ALL READINGS TAKEN WITH LINE PLUG POLARIZED SO THAT GROUND BUSS AND CHASSIS ARE AT SAME POTENTIAL WITH THE CHASSIS GROUND

(92D454)

Fig. 6. Tube socket voltage chart

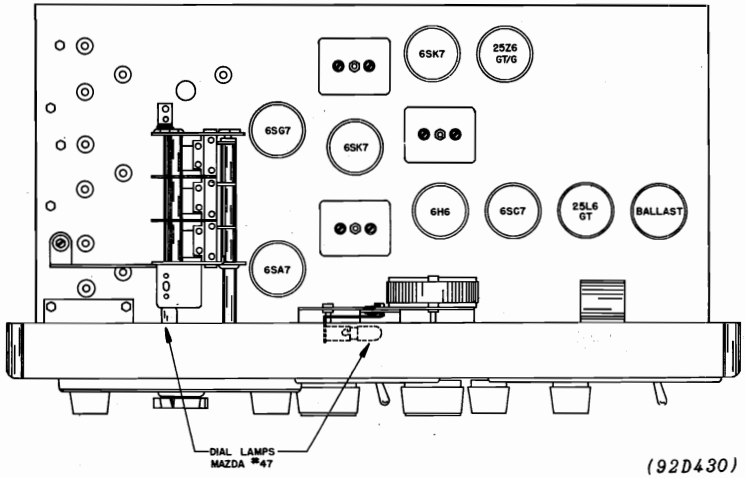

(92D430)

Fig. 7. Top view, location of tubes and dial lamps

©John F. Rider
Compliments of www.nucow.com

MODEL S-52

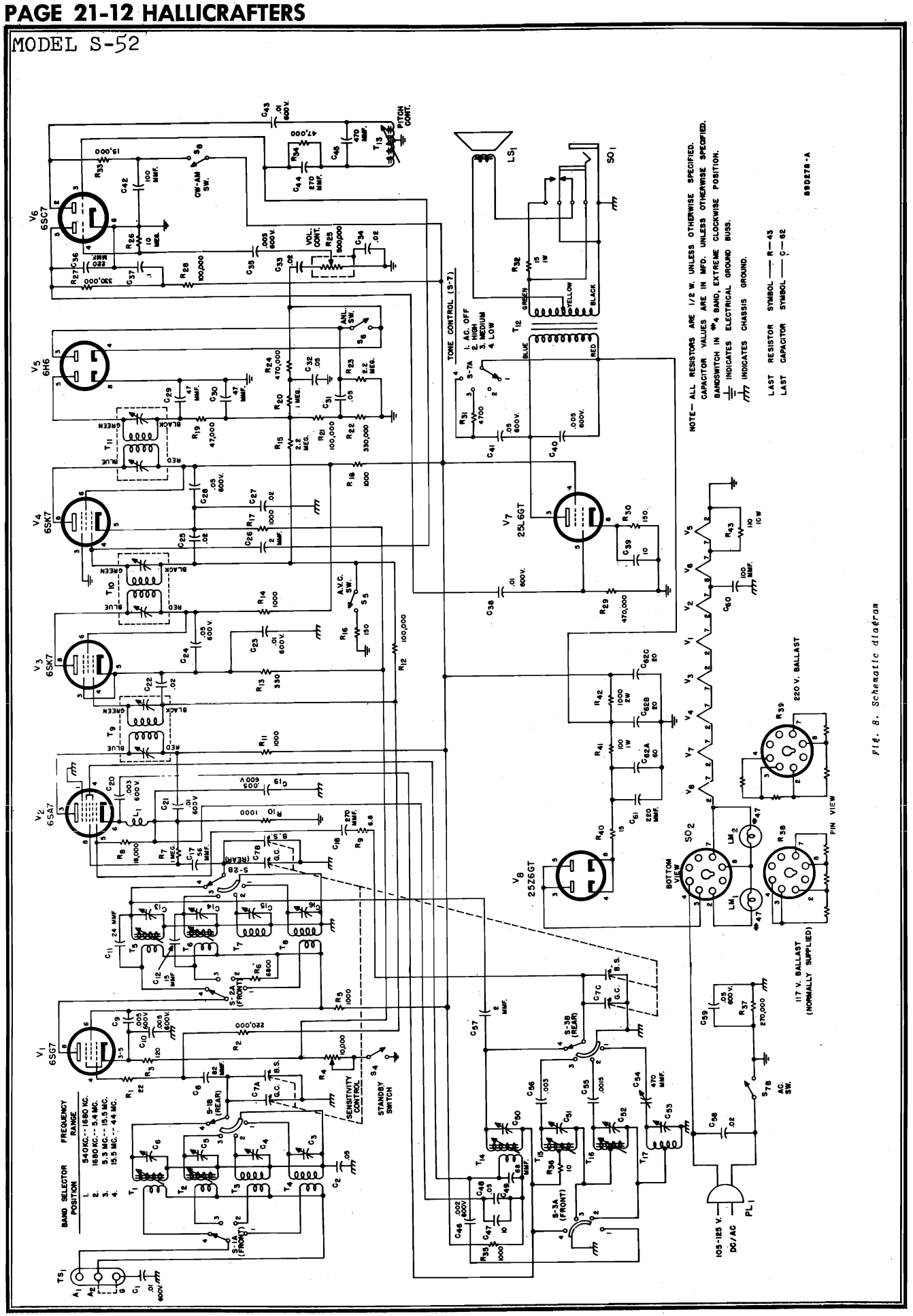

Fig. 8. Schematic diagram

©John F. Rider

Compliments of www.nucow.com

MODEL S-52

SERVICE PARTS LIST

Ref. No.	Description	Hallicrafters Part Number
	CONDENSERS	
C-1,21,23, 38,43	.01 mfd. 600 V., tubular paper	46AZ103J
C-2	.05 mfd. 200 V., tubular paper, braided leads	46A091
C-3,4	Trimmers, adjustable, part of transformers T-4,3 respectively	44A147
C-5,6	Trimmers, adjustable, part of transformers T-2,1 respectively	44A149
C-7	Tuning condenser, 3 section	48C138
C-8	82 mmf. 500 V., mica	CM20A820K
C-9,10,19,40	.005 mfd. 600 V., tubular paper	46AZ502J
C-11	24 mmf. 500 V., ceramic	CC21UK240M
C-12	15 mmf. 500 V., ceramic	CC21UK150M
C-13,14	Trimmers, adjustable, part of transformers T-5,6 respectively	44A149
C-15,16	Trimmers, adjustable, part of transformers T-7,8 respectively	44A147
C-17	56 mmf. 500 V., mica	CM20A560K
C-18,44	270 mmf. 500 V., mica	CM20A271K
C-20,35	.003 mfd. 600 V., tubular paper	46AZ302J
C-22,25,27, 33,34	.02 mfd. 200 V., tubular paper	46AU203J
C-24,28,41	.05 mfd. 600 V., tubular paper	46AY503J
C-26,57	2 mmf., twisted wire gimmick	
C-29,30	47 mmf. 500 V., mica	CM20A470M
C-31,32,48	.05 mfd. 200 V., tubular paper	46AU503J
C-36,61	220 mmf. 500 V., mica	CM20A221M
C-37	.1 mfd. 600 V., tubular paper	46AY104J
C-39	10 mfd. 25 V., electrolytic	45A121
C-42,60	100 mmf. 500 V., mica	CM20A101M
C-45	470 mmf. 500 V., mica	CM20A471J
C-46	.002 mfd. 600 V., tubular paper	46AZ202J
C-47	10 mfd. 150 V., electrolytic	45A097
C-49	68 mmf. 500 V., ceramic	CC25UK680K
C-50	Trimmer, adjustable, part of transformer T-14	44A149
C-51	Trimmer, adjustable, part of transformer T-15	44A148
C-52	Trimmer, adjustable, part of transformer T-16	44A147
C-53	Trimmer, adjustable	44A191
C-54	Trimmer, adjustable, part of transformer T-17	44A188
C-55	1500 mmf. 5% 500 V., mica	CM30C152J
C-56	3000 mmf. 500 V., mica	CM30C302K
C-58	.02 mfd. 600 V., moulded paper	46AC203J
C-59	.05 mfd. 600 V., tubular (Special)	46A150
C-62	60-20-20 mfd. 150 V., electrolytic	45B128
	RESISTORS	
R-1	22 ohms ½ watt, carbon	RC20AE220M
R-2	220,000 ohms ½ watt, carbon	RC20AE224M
R-3	120 ohms ½ watt, carbon	RC20AE121M
R-4	Resistor, variable, 10,000 ohms, SENSITIVITY control	25B587
R-5,11,14, 18,35	1,000 ohms ½ watt, carbon	RC20AE102M
R-6	6800 ohms ½ watt, carbon	RC20AE682K
R-7,20	1 megohm ½ watt, carbon	RC20AE105M
R-8	18,000 ohms ½ watt, carbon	RC20AE183K
R-9	6.8 ohms ½ watt, carbon	RC20AE068K
R-10,17	1,000 ohms ½ watt, carbon	RC20AE102K
R-12,21,28	100,000 ohms ½ watt, carbon	RC20AE104M
R-13	330 ohms ½ watt, carbon	RC20AE331K
R-15,23	2.2 megohms ½ watt, carbon	RC20AE225M
R-16,30	150 ohms ½ watt, carbon	RC20AE151M
R-19,34	47,000 ohms ½ watt, carbon	RC20AE473M
R-22,27	330,000 ohms ½ watt, carbon	RC20AE334M
R-24,29	470,000 ohms ½ watt, carbon	RC20AE474M
R-25	Resistor, variable, 500,000 ohms, VOLUME control	25B586
R-26	10 megohms ½ watt, carbon	RC20AE106M
R-31	4700 ohms ½ watt, carbon	RC20AE472M
R-32	15 ohms 1 watt, carbon	RC30AE150M
R-33	15,000 ohms ½ watt, carbon	RC20AE153M
R-36	10 ohms ½ watt, carbon	RC20AE100M
R-37	270,000 ohms ½ watt, carbon	RC20AE274M
R-38	Resistor, ballast, 110 V. operation	24B875
R-39	Resistor, ballast, 220 V. operation	24B874
R-40	15 ohms ½ watt, carbon	RC20AE150M
R-41	100 ohms 1 watt, carbon	RC30AE101K
R-42	1,000 ohms 2 watt, carbon	RC40AE102K
R-43	110 ohms 10 watt, carbon	24BG111E

SERVICE PARTS LIST (Cont.):

Ref. No.	Description	Hallicrafters Part Number
	TRANSFORMERS AND COILS	
T-1	Transformer, antenna stage, band 4	51B783
T-2	Transformer, antenna stage, band 3	51B782
T-3	Transformer, antenna stage, band 2	51B781
T-4	Transformer, antenna stage, band 1	51B780
T-5	Transformer, mixer stage, band 4	51B787
T-6	Transformer, mixer stage, band 3	51B786
T-7	Transformer, mixer stage, band 2	51B785
T-8	Transformer, mixer stage, band 1	51B784
T-9	Transformer, 1st I.F.	50C185
T-10	Transformer, 2nd I.F.	50C186
T-11	Transformer, detector stage	50C192
T-12	Transformer, audio output	55A110
T-13	Transformer, B.F.O.	54B033-2
T-14	Transformer, osc. stage, band 4	51B791
T-15	Transformer, osc. stage, band 3	51B913
T-16	Transformer, osc. stage, band 2	51B789
T-17	Transformer, osc. stage, band 1	51B912
L-1	Choke, R.F.	53B138
	SWITCHES	
S-1	Band switch section, antenna stage	62B039
S-2	Band switch section, mixer stage	62B039
S-3	Band switch section, oscillator stage	62B044
S-4,5,6,8	Switch, toggle, S.P.S.T., STANDBY-RECEIVE, A.V.C., A.N.L., and CW-AM	60A138
S-7	Switch, PWR-TONE control	60A225
	PLUGS AND SOCKETS	
PL-1	Line cord	87B1573
SO-1	Headset jack	36A004
SO-2	Socket, octal (tube and ballast)	6A035
	Socket, dial light, general coverage dial	86B071
	Socket, dial light, bandspread dial	86B068
	TUBES, RECTIFIERS AND LAMPS	
V-1	Type 6SG7, antenna	90X6SG7
V-2	Type 6SA7, mixer	90X6SA7
V-3,4	Type 6SK7, 1st and 2nd I.F. amplifiers	90X6SK7
V-5	Type 6H6, detector and noise limiter	90X6H6
V-6	Type 6SC7, 1st audio and B.F.O.	90X6SC7
V-7	Type 25L6GT, audio power amplifier	90X25L6GT
V-8	Type 25Z6GT, rectifier	90X25Z6GT
LM-1,2	Lamp, dial light, Mazda #47	39A004
	MISCELLANEOUS	
TS-1	Terminal strip, antenna	88A032
	Lock, line cord	76A397
	Shaft, bandswitch and index plate	74B172
	Collar, bandswitch	77A043
	Bracket, dial drive mtg.	67B503
	Dial shaft, bandspread	74A169
	Drive shaft, main tuning	74A171
	Drive shaft, bandspread	74A170
	Washer, spring (Bandswitch, bandspread dial, and main tuning drive shafts)	4A043
	Spring, retainer (Bandspread, and main tuning drive shaft)	75A062
	Flywheel, bandspread tuning	71A178
	Pulley, bandspread dial	28A012
	Dial cord	38A001
	Spring, dial cord	75A012
	Dial, bandspread	83B254
	Dial, general coverage	83D240
	Escutcheon, bandspread dial	7B017
	Escutcheon, general coverage dial	7C034
LS-1	Speaker, P.M.	85B050
	Baffle, speaker	63C223
	Grill, speaker	7C016
	Knob, PITCH CONTROL	15A058
	KNOB, SENSITIVITY, VOLUME and and TONE	15A049
	Knob, TUNING and BANDSPREAD	15A047
	Knob, BAND SELECTOR	15B053

©John F. Rider

Compliments of www.nucow.com

MODELS S-53-A,
S-53-AU

GENERAL

Tubes	Seven plus rectifier
Speaker	5-inch PM
Voice Coil Impedance	3.2 ohms
Headset Output	Low Impedance
Antenna	Provision for external antenna
Tuning	Manual

Tuning Range

Range	Frequency Coverage
A	550 KC - 1650 KC
B	2.6 MC - 6.4 MC
C	6.2 MC - 16.5 MC
D	14 MC - 31 MC
E	48 MC - 55 MC

Intermediate Frequency	2,075 mc
Power Supply S-53A	105-125 V. 50 to 60 cycles AC
S-53AU	105-250 V. 40 to 130 cycles AC
Power Consumption	50 watts

RESTRINGING DIAL CORD

To restring the general coverage dial cord, cut a 48-inch length of 30 lb. test dial cord and tie one end to the tension spring of the general coverage tuning capacitor drive pulley at position "1" on the diagram. Follow the sequence "1" through "12" and at position "12" stretch the tension spring and tie the cord securely.

Set the general coverage tuning condenser at maximum capacity and attach and set the pointer in line with the left hand index marker.

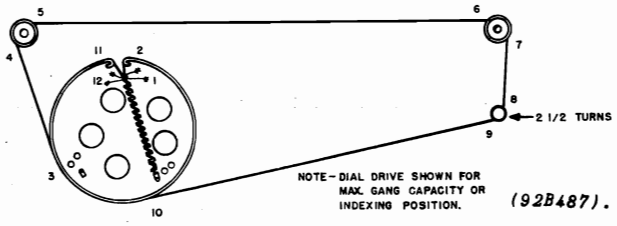

Fig. 1. Dial cable stringing procedure, general coverage dial.

To restring the band spread dial cord, cut a 36-inch length of 30 lb. test dial cord and follow the procedure as above, starting at position "A" ending at "L".

Set the bandspread condenser at minimum capacity and attach and set the pointer at "100" on the logging scale.

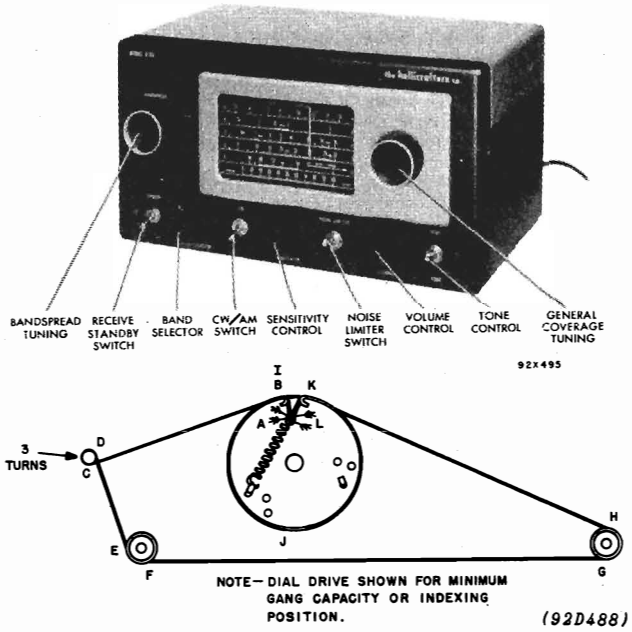

Fig. 2. Dial cable stringing procedure, band spread dial.

REPLACING LAMPS

Refer to Fig. 8. for the location of the two dial lamps used in the receiver. To gain access to defective lamps, reach in through cabinet cover and unclip the dial lamp sockets. The sockets may then be brought out into the open to change the defective lamp. Replace lamps with 6-8 V. Mazda #44, (Blue bead) lamps or equivalent.

ALIGNMENT PROCEDURE

Set the following controls before alignment.

STANBY/RECEIVE	Set at RECEIVE
CW/AM	Set at AM (see step 2)
SENSITIVITY	Set at maximum
NOISE LIMITER	Set at OFF
VOLUME	Set at maximum
TONE switch	Set at HIGH
BANDSPREAD	Set at 100
SPEAKER/PHONES switch	Set at SPEAKER

Remove the receiver chassis from the cabinet to make alignment adjustments. The chassis is held in the cabinet by three screws along both the bottom edge of the front panel and the rear of the cabinet, and two screws on either side of the front panel.

Before starting the alignment procedure, index the general coverage dial pointer on the low frequency end of the range and index the bandspread dial pointer at 100. The general coverage condenser should index at maximum capacity and the bandspread condenser should index at minimum capacity.

©John F. Rider

Compliments of www.nucow.com

MODELS S-53-A,
S-53-AU

ALIGNMENT CHART

Step	Dummy Antenna	Signal Generator Coupling	Signal Generator Frequency	Band Selector Setting	Receiver Dial Setting	Adjust	Remarks
1	0.1 mfd. capacitor	High side to front stator section of tuning cap. Low side to chassis.	455 kc	A	Tuning cap. fully open	S1,S2,S3,S4,S5, S6,	Adjust for maximum audio output at speaker voice coil. Use just enough signal generator output to obtain a 50 mw audio level.
2	See step 1.	See step 1.	455 kc	A	See step 1.	S9	With the CW/AM switch set at CW, adjust S-9 for zero beat.
3	300 ohm carbon resistor	High side to "A1" on antenna strip. Jumper connected between "A2" and "G"	1500 kc 600 kc	A	1500 kc 600 kc	*A,B *C	Adjust for maximum output as in step 1.
4	See step 3.	See step 3.	6 mc	B	6 mc	*D,E	Adjust for maximum output as in step 1.
5	See step 3.	See step 3.	15 mc	C	15 mc	*F,G	Adjust for maximum output as in step 1.
6	See step 3.	See step 3.	30 mc	D	30 mc	*I,H	Adjust for maximum output as in step 1.
7	See step 3.	See step 3.	52 mc	E	52 mc	*J,K	Adjust for maximum output as in step 1.

*Note - Calibration adjustments.

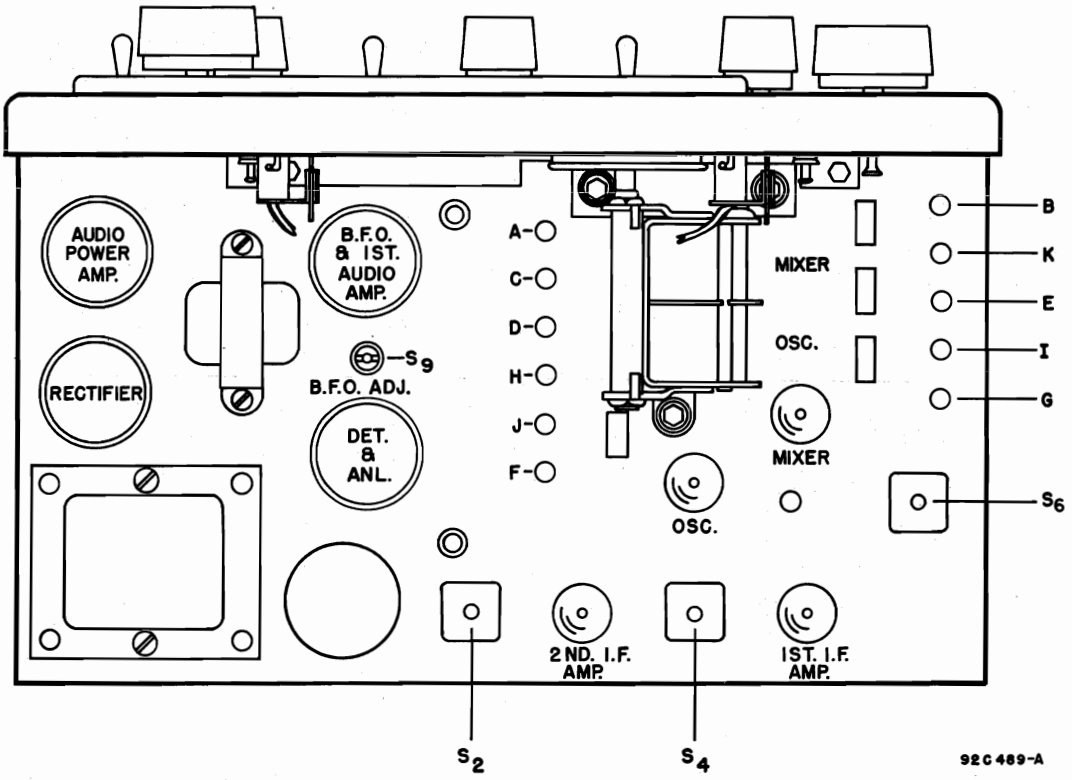

Fig. 3. Alignment points, top view.

©John F. Rider

Compliments of www.nucow.com

MODELS S-53-A,
S-53-AU

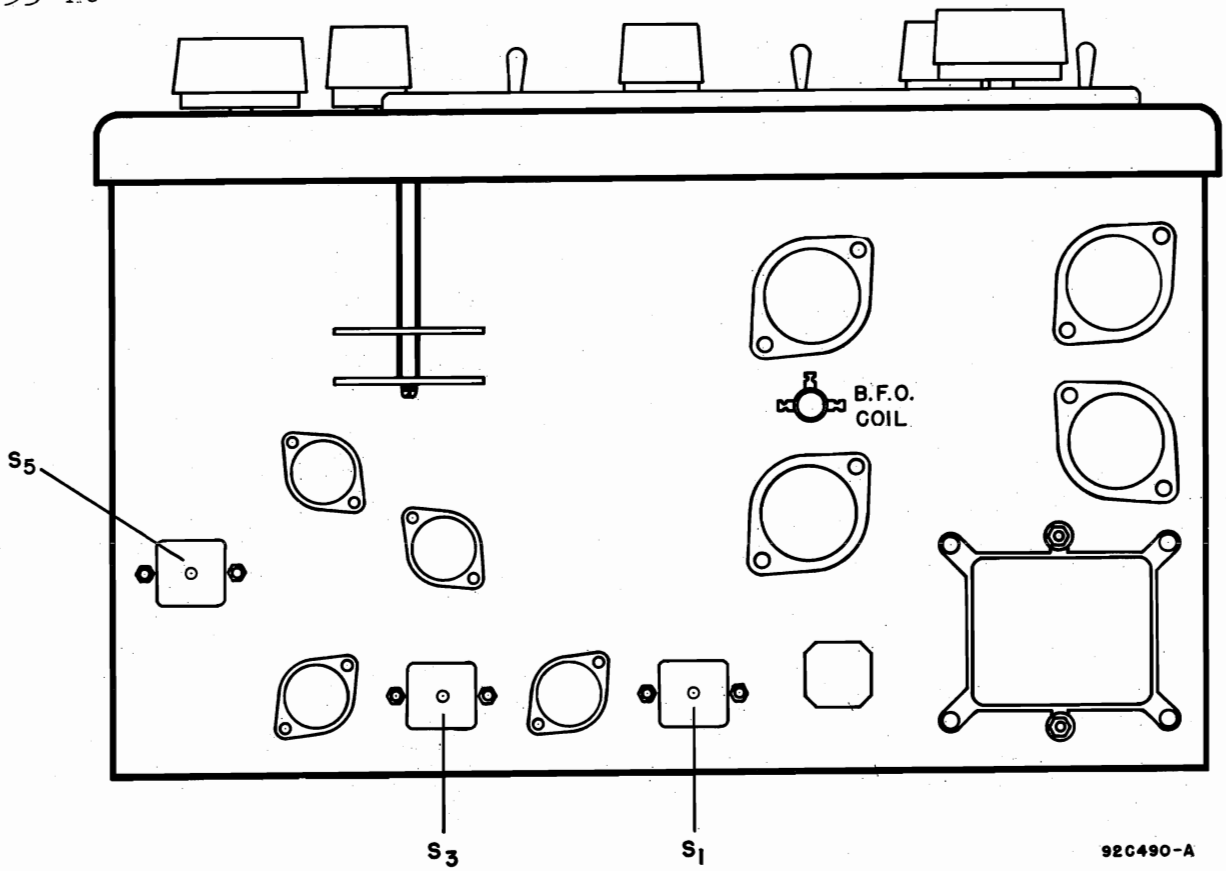

Fig. 4. Alignment points, bottom view.

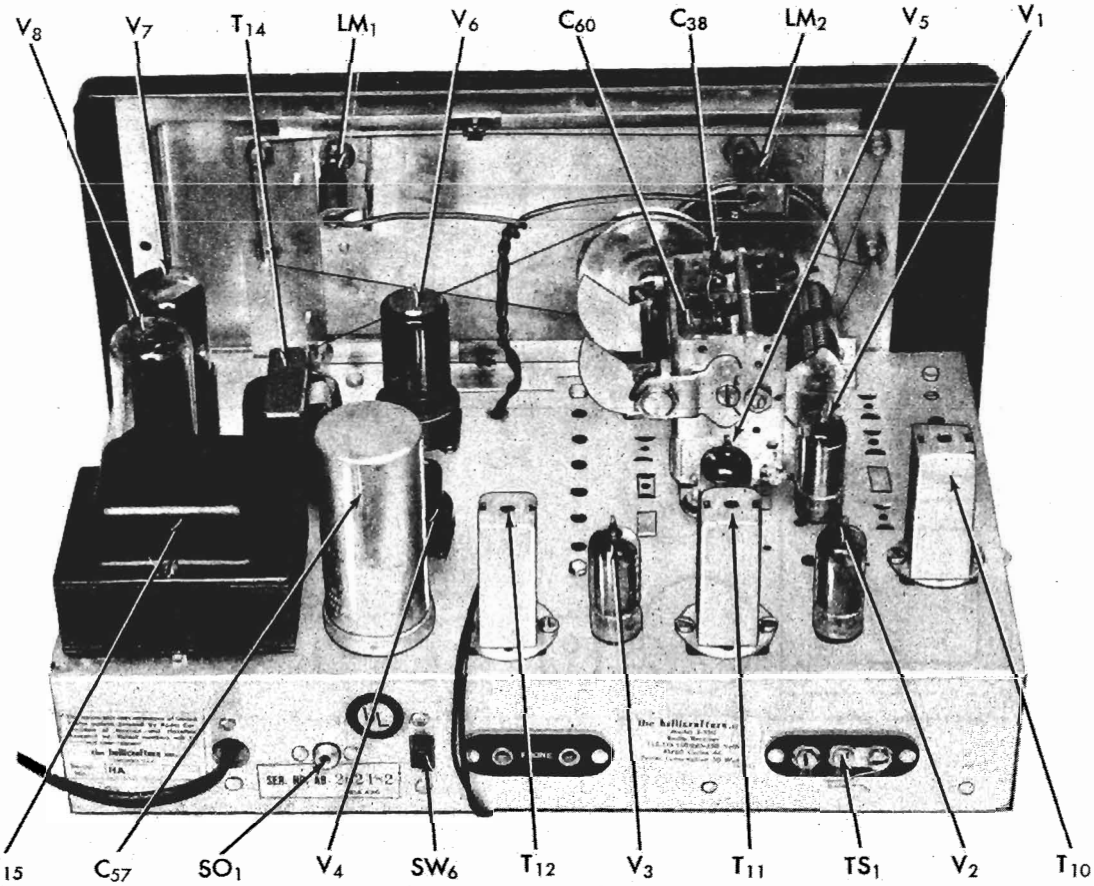

Fig. 5. Component location, top view.

©John F. Rider

Compliments of www.nucow.com

MODELS S-53-A,
S-53-AU

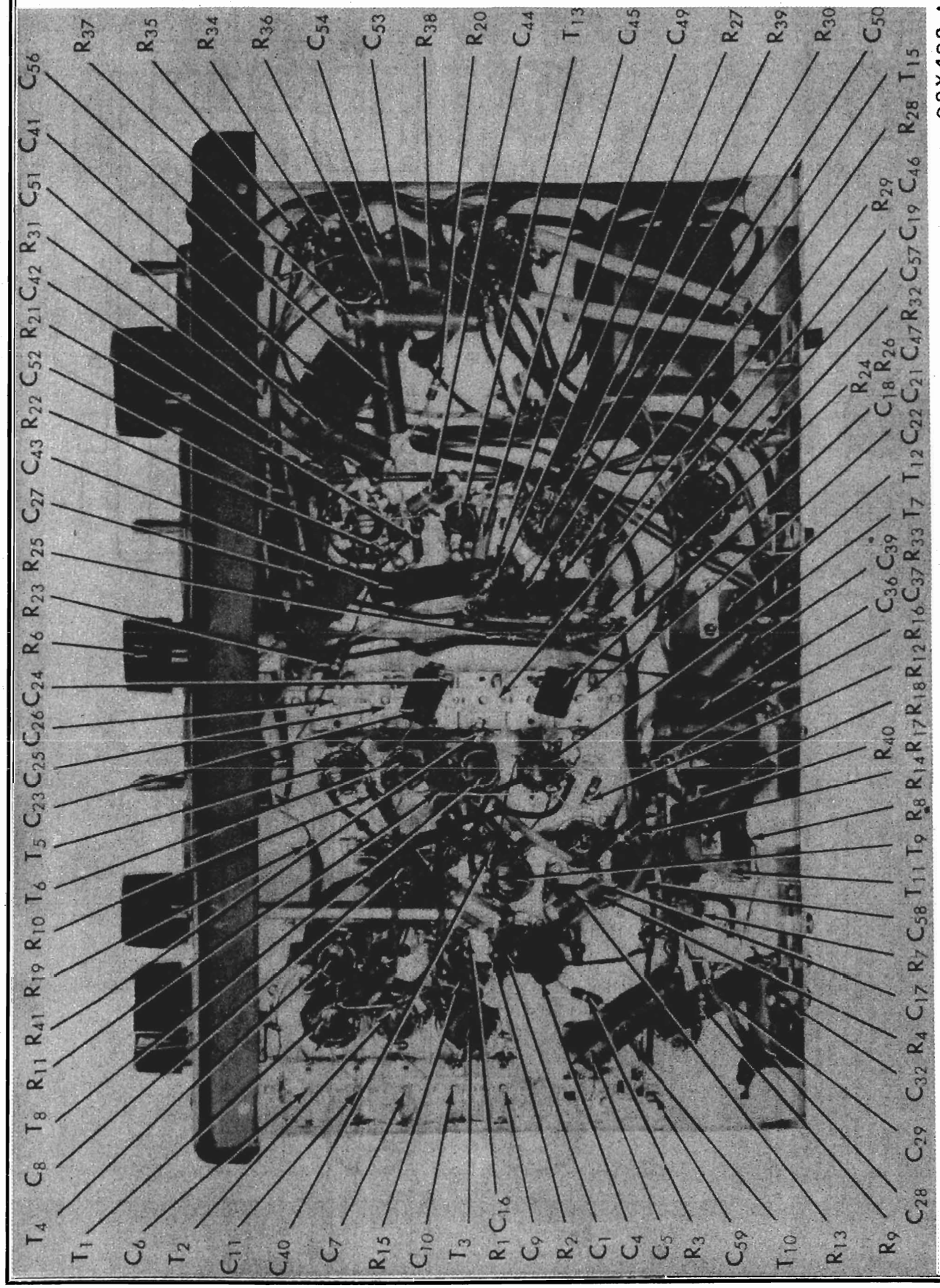

Fig. 6. Component location, bottom view.

©John F. Rider

Compliments of www.nucow.com

NOTES—

1. SOCKET VIEWS ARE BOTTOM VIEWS.
2. ALL VOLTAGES ARE MEASURED BETWEEN TUBE SOCKET TERMINALS AND CHASSIS WITH ZERO SIGNAL INPUT.
3. LINE VOLTAGE ——— 117 V. AC. (60 CYCLES).
4. ALL VOLTAGES SHOWN ARE DC. UNLESS OTHERWISE SPECIFIED.
5. DC VOLTAGES SHOWN WERE MEASURED WITH AN ELECTRONIC VOLTMETER.
6. READINGS TAKEN WITH STANDBY / RECEIVE SWITCH SET AT "RECEIVE"; CW/AM SWITCH SET AT "AM"; NOISE LIMITER SWITCH ON.
7. "NC"—NO CONNECTION. (VOLTAGE SHOWN FOR THIS TERMINAL ONLY WHEN TERMINAL IS USED AS A TIE LUG).
8. "NR"—NOT READABLE. (READING GENERALLY MEANINGLESS).
9. [ ] SPACE PROVIDED FOR SERVICE METER READINGS.

Fig. 7. Tube socket voltage chart

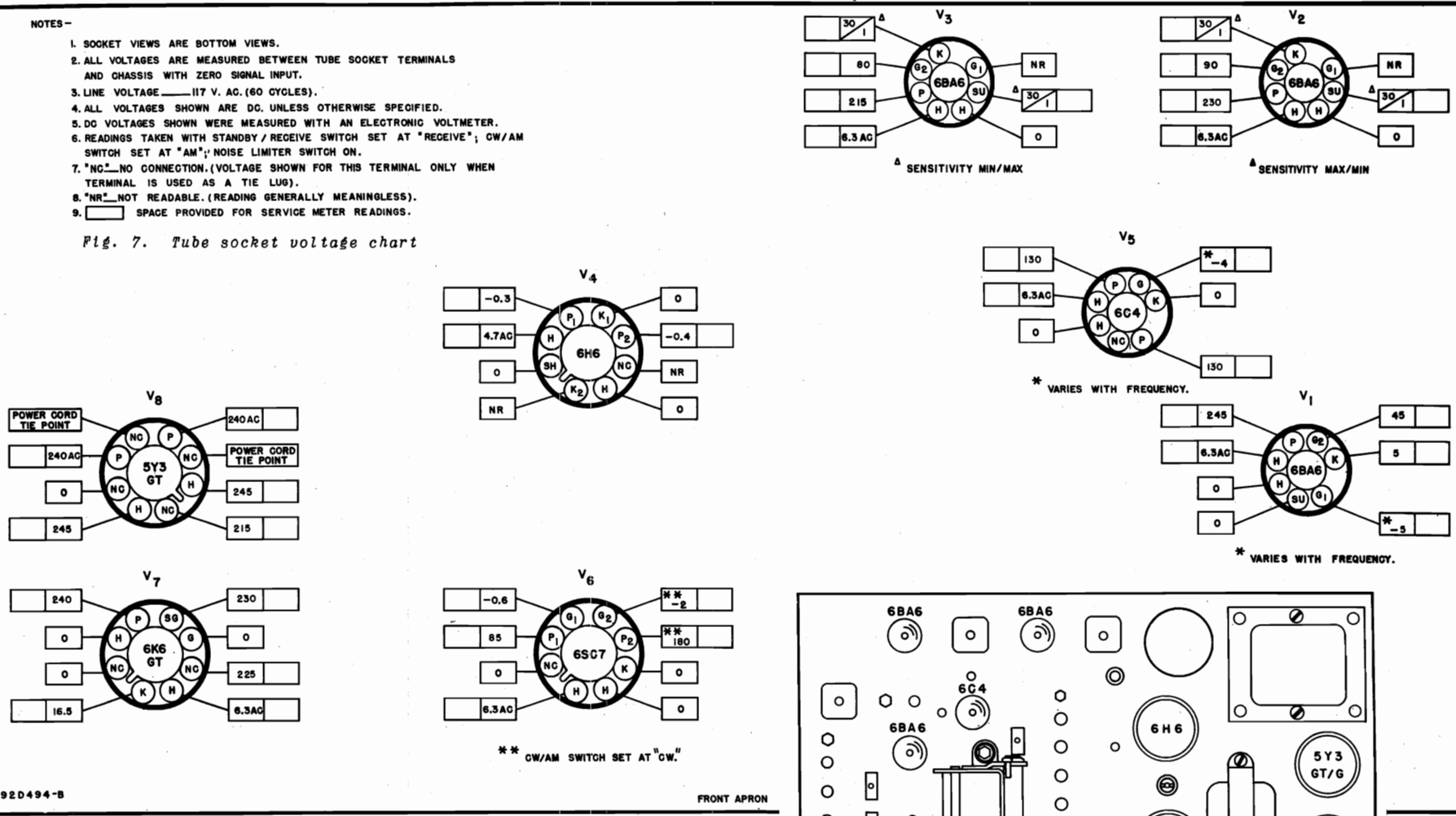

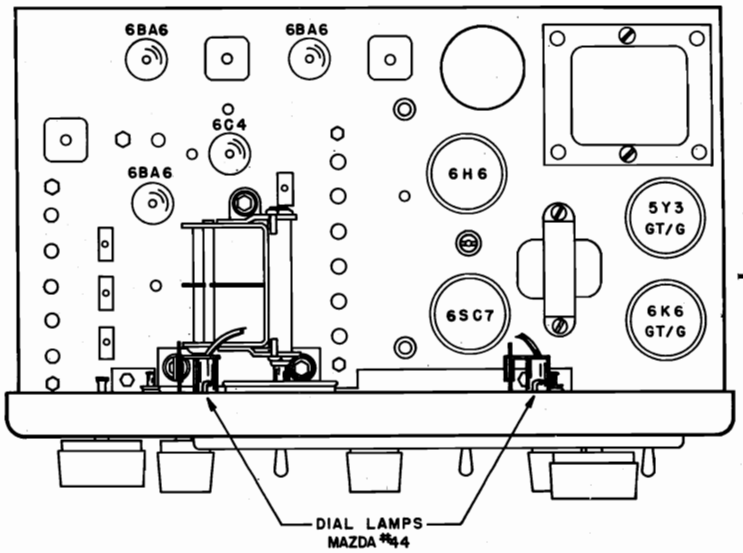

Fig. 8. Top view, location of tubes and dial lamps.

©John F. Rider

Compliments of www.nucow.com

MODELS S-53-A,
S-53-AU

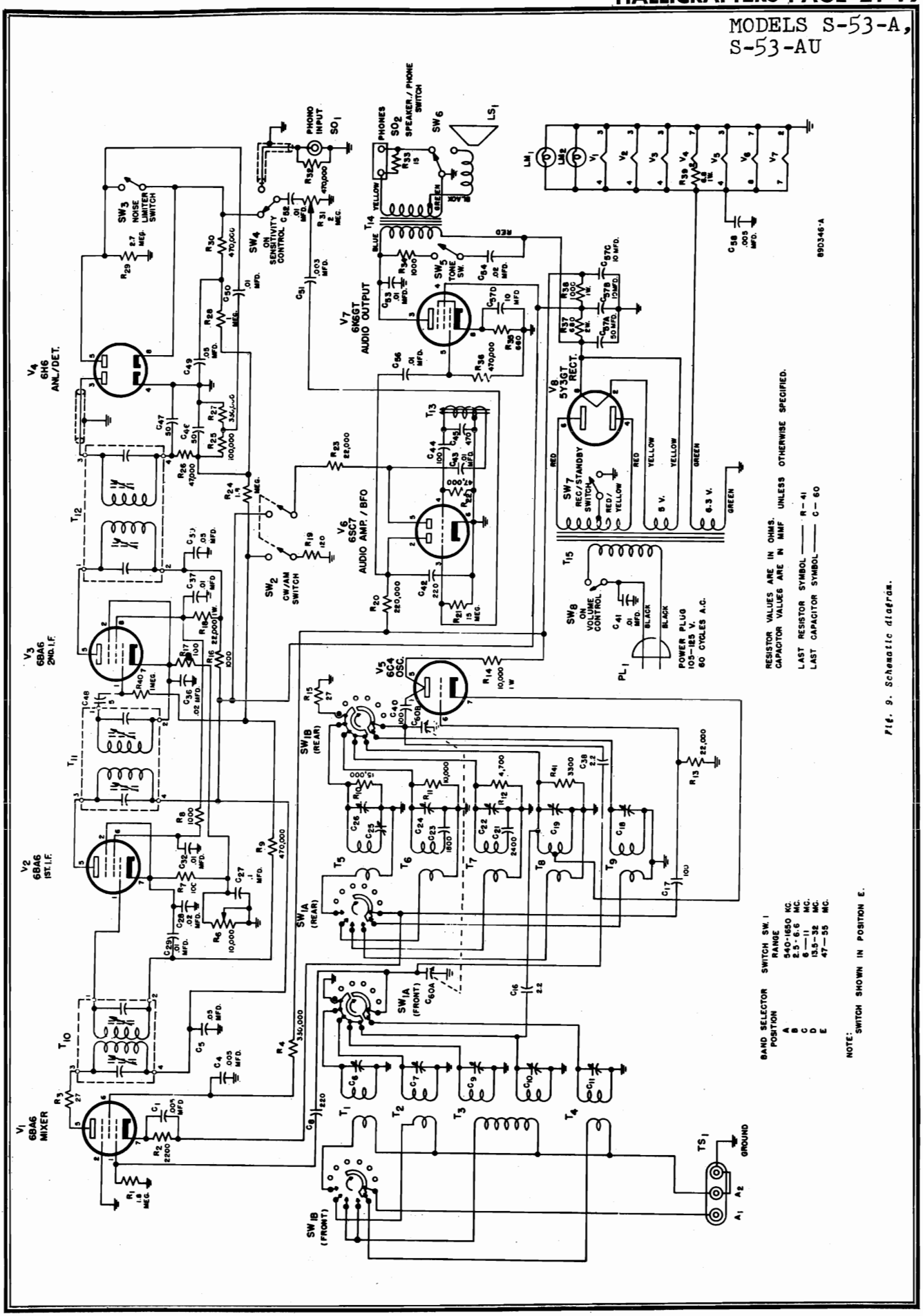

Fig. 9. Schematic diagram.

©John F. Rider

Compliments of www.nucow.com

MODELS S-53-A,
S-53-AU

SERVICE PARTS LIST

Ref. No.	Description	Manufacturers Part Number
	CONDENSERS	
C-1,4,58	.005 mfd. 450 V., ceramic	47A168
C-5,39,49	.05 mfd. 400 V., tubular	46AW503J
C-6,7,9,10 11	Trimmer assembly, 5 sections, antenna stage	44B355
C-8,42	220 mmf. 500 V., mica	47X20B221K
C-16,38,	2.2 mmf. 500 V., ceramic	47A160-4
C-17,40,44	100 mmf. 500 V., ceramic	47A086
C-18,19,22, 24,25,26	Trimmer assembly, 6 sections, oscillator stage	44B388
C-21	2400 mmf. 500 V., silver mica	47X20C242J
C-23	1800 mmf. 2% 500 V., silver mica	47X20C182G
C-27	.1 mfd. 200 V., tubular	46AU104J
C-28,36,54	.02 mfd. 600 V., tubular	46AY203J
C-29,32,37, 43,50,52, 53,56	.01 mfd. 600 V., tubular	46AZ103J
C-41	.01 mfd. 600 V., molded paper	46AC103J
C-45	470 mmf. 500 V., mica	47X20B471J
C-46,47	50 mmf. 500 V., ceramic	47A091
C-48	5 mmf. 500 V., ceramic	47X20UK050K
C-51	.003 mfd. 600 V., tubular	46AZ302J
C-57	50-10-10 mfd. 350-10-25 V., electrolytic	45B122
C-60	Tuning condenser, 2 section	48C198
	RESISTORS	
R-1,24	1.8 megohms 1/2 watt, carbon	23X20X185M
R-2	2200 ohms 1/2 watt, carbon	23X20X222M
R-3,15	27 ohms 1/2 watt, carbon	23X20X270M
R-4,27	330,000 ohms 1/2 watt, carbon	23X20X334K
R-6	10,000 ohms, variable SENSITIVITY control	25B603
R-7,17	100 ohms 1/2 watt, carbon	23X20X101K
R-8,16,34	1000 ohms 1/2 watt, carbon	23X20X102M
R-9,30,32, 36	470,000 ohms 1/2 watt, carbon	23X20X474M
R-10	15,000 ohms 1/2 watt, carbon	23X20X153K
R-11	10,000 ohms 1/2 watt, carbon	23X20X103K
R-12	4700 ohms 1/2 watt, carbon	23X20X472K
R-13,23	22,000 ohms 1/2 watt, carbon	23X20X223M
R-14	10,000 ohms 1 watt, carbon	23X30X103K
R-18	22,000 ohms 1 watt, carbon	23X30X223M
R-19	120 ohms 1/2 watt, carbon	23X20X121M
R-20	220,000 ohms 1/2 watt, carbon	23X20X224K
R-21	15 megohms 1/2 watt, carbon	23X20X156K
R-22,26	47,000 ohms 1/2 watt, carbon	23X20X473M
R-25	100,000 ohms 1/2 watt, carbon	23X20X104K
R-28,40	1 megohm 1/2 watt, carbon	23X20X105M
R-29	2.7 megohms 1/2 watt, carbon	23X20X275M
R-31	2 megohms, variable, VOLUME control	25B602
R-33	15 ohms 1/2 watt, carbon	23X20X150M
R-35	680 ohms 1/2 watt, carbon	23X20X681K
R-37	680 ohms 2 watts, carbon	23X40X681M
R-38	1000 ohms 1 watt, carbon	23X30X102M
R-39	6.8 ohms 1 watt, carbon	23X30X068K
R-41	3300 ohms 1/2 watt, carbon	23X20X332K
	TRANSFORMERS AND COILS	
T-1	Transformer, antenna stage, band A	51B1028
T-2	Transformer, antenna stage, band B	51B1244
T-3	Transformer, antenna stage, band C & D	51B1026
T-4	Transformer, antenna stage, band E	51B1030
T-5	Transformer, oscillator stage, band A	51B1235
T-6	Transformer, oscillator stage, band B	51B1236
	TRANSFORMERS AND COILS (Cont.)	
T-7	Transformer, oscillator stage, band C	51A1237
T-8	Transformer, oscillator stage, band D	51B1238
T-9	Transformer, oscillator stage, band E	51B1239
T-10,11	Transformer, 1st and 2nd IF	50C241
T-12	Transformer, 3rd IF	50C242
T-13	Transformer, BFO	54B043
T-14	Transformer, audio output	55B107
T-15	Transformer, power (Standard) (Used on S-53-A)	52C164
T-15	Transformer, power (Universal) (Used on S-53-AU)	52C165
	SWITCHES	
SW-1	Band switch assembly	60B323
SW-2	Switch, toggle DPST, CW/AM control	60A285
SW-3,5,7	Switch, toggle, SPST, STANDBY/ REC., NOISE LIMITER & TONE control	60A138
SW-4	Switch, part of SENSITIVITY control, R-6	
SW-6	Switch, slide, SPDT, SPEAKER/ PHONE control	60A243
SW-8	Switch, part of VOLUME control R-31	
	PLUGS AND SOCKETS	
PL-1	Line cord and plug	87A078
SO-1	Receptacle, phono	36A041
SO-2	Receptacle, headphone jack	88A071
	Socket, octal (tube)	6A269
	Socket, miniature (tube)	6A297
	Socket, dial light	86B063
	TUBES, RECTIFIERS AND LAMPS	
V-1,2,3	6BA6, mixer, 1st & 2nd IF amplifier	90X6BA6
V-4	6H6, detector & ANL	90X6H6
V-5	6C4, oscillator	90X6C4
V-6	6SC7, audio amplifier & BFO	90X6SC7
V-7	6K6-GT, power amplifier	90X6K6-GT
V-8	5Y3-GT, rectifier	90X5Y3-GT
LM-1,2	Lamp, 6-8 V., 250 ma., Mazda#44	39A003
	MISCELLANEOUS	
TS-1	Terminal strip, antenna	88A032
	Lock, line cord	76A299
	Clip, coil mtg.	76A325
	Shaft, tuning drive	74A248
	"C" washer (tuning drive shaft)	4A139
	Spring, dial cord	75A012
	Dial cord	38A019
	Plate, dial	63C333
	Pointer, general coverage dial	82A149
	Pointer, band spread dial	82A148
	Dial Glass (Calibrated)	22C204
	Gasket, dial glass	12A042
	Clip, dial glass mtg.	76A390
	Pad, dial clip	16A126
	Pad, felt (round disc)	14A166
	Pad, sponge rubber	16A047-1
	Mounting feet, rubber	16A007
LS-1	Speaker, P.M.	85C030
	Knob, BAND SELECTOR, SENSITIVITY and VOLUME controls	15A050
	Knob, BANDSPREAD & general coverage controls	15A047

©John F. Rider

Compliments of www.nucow.com

GENERAL

Tubes . . . . . eleven plus voltage regulator and rectifier
Speaker Output . . . . . 3.2/500 ohms
Headset Output . . . . . 500 ohms
Antenna Input . . . . . For 50 to 600 ohm line or single wire lead-in.
Phono Input . . . . . High impedance
External Power Connector . . . Std. octal socket
Tuning Range

Band	*Frequency Range	Type of Reception
1	560 KC - 1600 KC	AM/NBFM/CW
2	1650 KC - 4700 KC	AM/NBFM/CW
3	4.7 MC - 13.4 MC	AM/NBFM/CW
4	12.8 MC - 34 MC	AM/NBFM/CW
5	46 MC - 56 MC	AM/NBFM/CW

* First and last dial calibration

Intermediate Frequency . . . . . 455kc/2.075 MC
Power Supply . . . . . Standard Model 105-125 V. 60 Cycles AC
Universal Model 105-250 V. 25/130 Cycles AC
Power Consumption . . . . . 90 Watts.

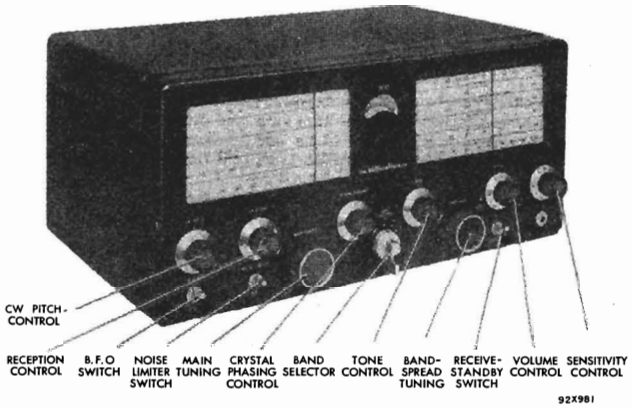

RESTRINGING DIAL CORD

The dial drive system of the SX-71 consists of four separate spring drives. The two drive shaft string systems are identical; the two pointer drive systems are similar but right and left handed.

(1) DRIVE SHAFT. - To restring either one, use a 26 inch length of 30 lb. test dial cord. Tie one end of the cord to position "1" on the drum and follow the stringing sequence "1" to "9" as shown. At position "9" stretch the tension spring and tie the cord securely to the spring. Note that the dial cord is wrapped around the drive shaft three and one half times for proper traction.

(2) POINTER DRIVE - To restring either one, use a 66 inch length of 30 lb. test dial cord. Tie one end of the dial cord to position "A" and follow the stringing sequence "A" to "U" as shown. At position "U", stretch the tension spring and tie the cord securely to the spring. Two small pieces of spaghetti tubing approximately one half inch long should be threaded on the cord, as shown, to provide a suitable purchase for the dial pointer. With the pointer drive, pulleys positioned as shown on the diagram (Fig. 1.), the tuning capacitor should be entirely closed. The pointer may now be fastened to the cord and aligned with the 0 position on the logging scale and the index marks on the dial scales. The ends of the pointer should be carefully crimped around the spaghetti tubing and cemented fast.

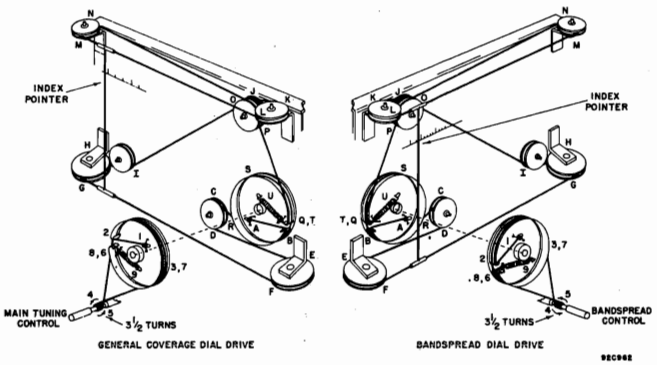

Figure 1. Dial cable stringing procedure

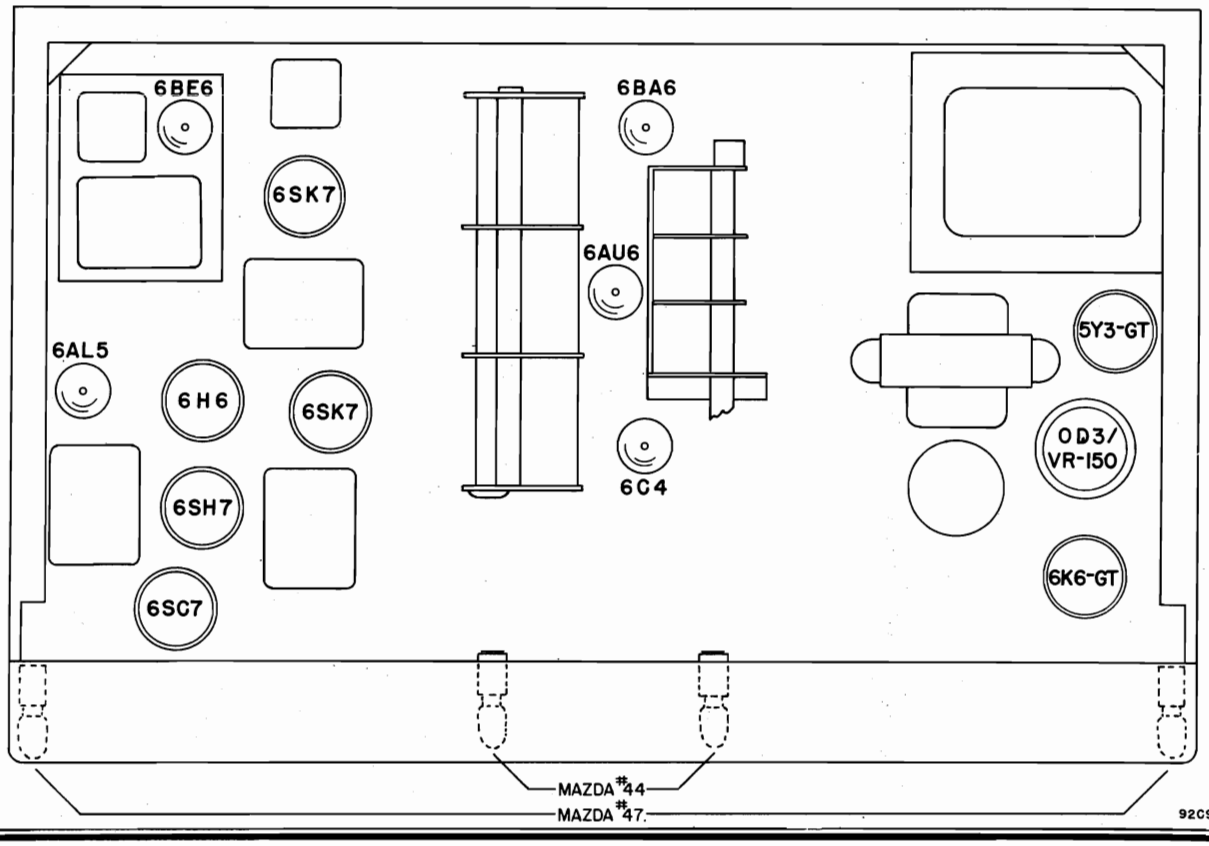

© John F. Rider

Compliments of www.nucow.com

MODEL SX-71

ALIGNMENT PROCEDURE

It will be necessary to remove the receiver chassis from the cabinet to make all alignment adjustments. The chassis is held in the cabinet by two screws on the bottom rear and by the flanges on the side and bottom.
The following control settings are to be set before alignment: TONE control at maximum. SENSITIVITY control at maximum. VOLUME control at maximum. NOISE LIMITER switch at OFF. RECEIVE/STANDBY switch at RECEIVE.

I-F ALIGNMENT

Step	Signal Gen. Coupling	Signal Gen. Frequency	Receiver Control Settings	Receiver Dial Set	Adjust	Remarks
1	Connect gen. to stator of gang, mixer sect.	455 KC Unmodulated	BAND SELECTOR at 2. RECEPTION switch at BROAD CRYSTAL. BFO switch at BFO.	Both dials set at 50 on the logging scale		Remove CW PITCH control knob and set shaft for zero beat. Replace knob with the zero at the index line.
2	Same as step 1.	Same as step 1.	Adjust CW-PITCH for a 1000 cycle note. Other controls same as step 1.	Same as step 1.	U	While turning the slug very slowly in one direction, "rock" the signal generator. As the adjustment passes thru the response of the crystal filter, the output goes thru a maximum, dips down, and starts going up again. The correct setting of this slug is in the center of the observed dip. A swishing note, in contrast to the sharp crystal tone will be apparent when the correct adjustment has been reached.
3	Same as step 1.	Same as step 1.	RECEPTION switch at SHARP CRYSTAL. Other controls same as step 1.	Same as step 1.		Set the generator frequency for maximum output on the crystal frequency.
4	Same as step 1.	Same as step 3. Modulated	RECEPTION switch at NORMAL I.F. BFO switch at OFF. Other controls same as step 1.	Same as step 1.	V W X Y Z (1) (2)	Maximum output Maximum output Maximum output Maximum output Maximum output Maximum output Maximum output Repeat above until maximum gain is obtained.

F-M ALIGNMENT

5	Same as step 1.	Same as step 3. Increase output to approx. 1000 microvolts.	RECEPTION switch at NBFM. Other controls same as step 1.	Same as step 1.	(3)	Set up circuit shown in Fig. 2. Until vacuum tube voltmeter shows zero voltage.

I-F ALIGNMENT

6	Same as step 1.	2.075 MC Modulated	RECEPTION switch at NORMAL I.F. BAND SELECTOR at 4.	Same as step 1.	(4) (5) (6)	Until a signal is heard. For maximum output. For maximum output. Repeat until the maximum output is obtained.

R-F ALIGNMENT

Leave BANDSPREAD dial at 100 for all steps. The following adjustments can be made without removing the chassis from the cabinet.

1	Connect the high side of the gen. thru a 300 ohm resistor to term. A1 of the ant. term. strip. Connect a jumper between A2 & G. Use just enough gain to obtain a 500 milliwatt audio output level.	1500 KC 600 KC 1500 KC	BAND SELECTOR at 1. RECEPTION switch at NORMAL I.F. BFO switch at BFO	1500 KC 600 KC 1500 KC	A(osc.trim) B C D(osc.pad) A B Repeat	Until a signal is heard. For maximum output. For maximum output. Until a signal is heard. For maximum output. For maximum output Until maximum output is obtained.
2	Same as step 1	4 MC	BAND SELECTOR at 2. Other controls as in step 1.	4 MC	E(osc.trim) F G E F G	Until a signal is heard. For maximum output For maximum output For maximum output For maximum output For maximum output Repeat until maximum output is obtained
3	Same as step 1.	12 MC 5.2 MC 12 MC	BAND SELECTOR at 3. Other controls as in step 1.	12 MC 5.2 MC 12 MC	H(osc.trim) I H J K	Until a signal is heard Until a signal is heard For maximum output. ("Rock" the gang) For maximum output. ("Rock" the gang) For maximum output. ("Rock" the gang) Repeat until maximum results are obtained.
4	Same as step 1	30 MC 14 MC	BAND SELECTOR at 4. Other controls as in step 1.	30 MC 14 MC	L(osc.trim) M (slug) N O L P Q	Until a signal is heard. Until a signal is heard. For maximum output. ("Rock" the gang) For maximum output. ("Rock" the gang) For maximum output. ("Rock" the gang) For maximum output. ("Rock" the gang) For maximum output. ("Rock" the gang) Repeat until maximum results are obtained.
5	Same as step 1.	54 MC	BAND SELECTOR at 5. Other controls as in step 1.	100 on logging scale.	R(osc.trim) S T	Until a signal is heard. For maximum output. ("Rock" the gang) For maximum output. ("Rock" the gang) Repeat until maximum results are obtained.

©John F. Rider

Compliments of www.nucow.com

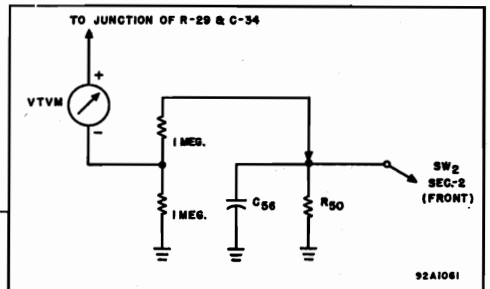

Fig. 2. FM Alignment

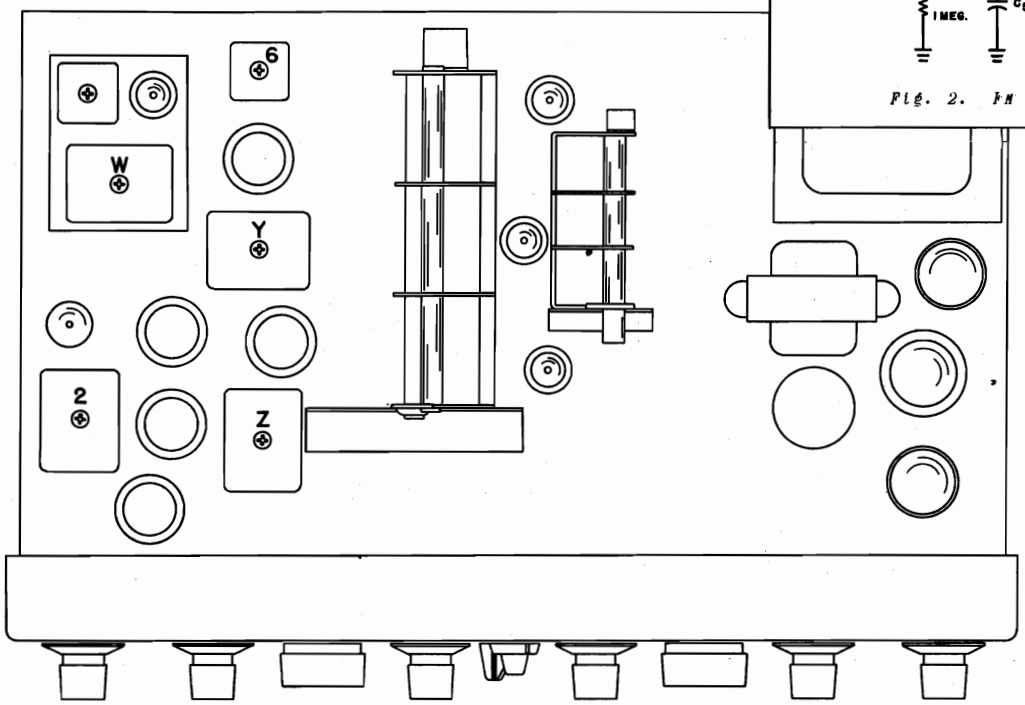

Fig. 3. Alignment adjustments, top view

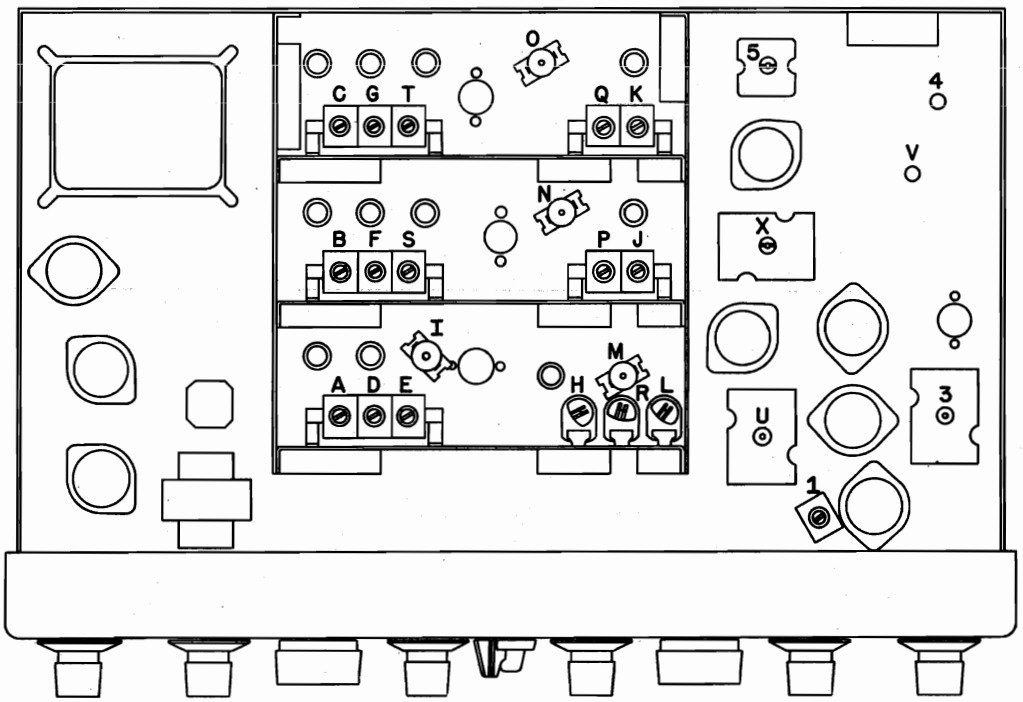

Fig. 4. Alignment adjustments, bottom view

©John F. Rider

Compliments of www.nucow.com

MODEL SX-71

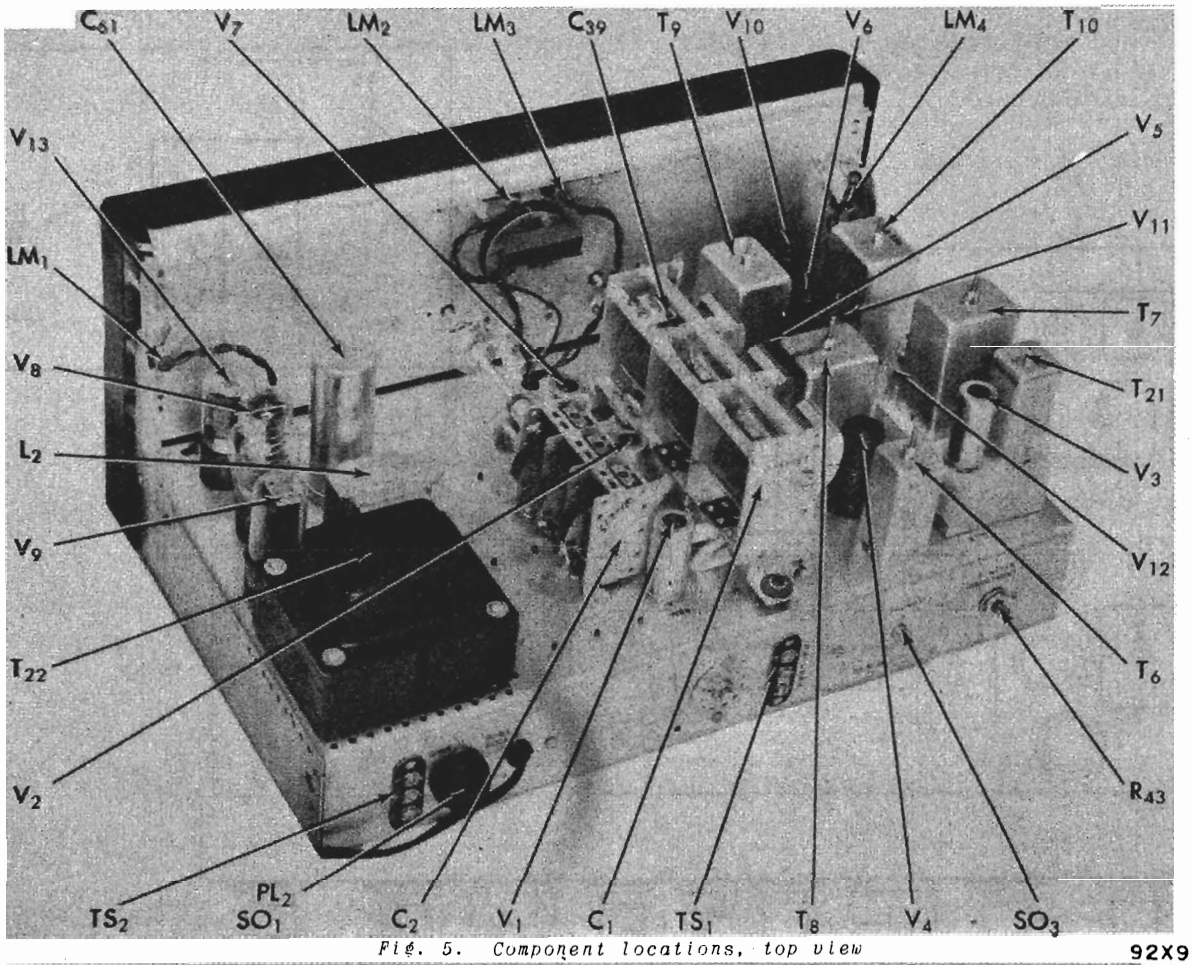

Fig. 5. Component locations, top view

92X966

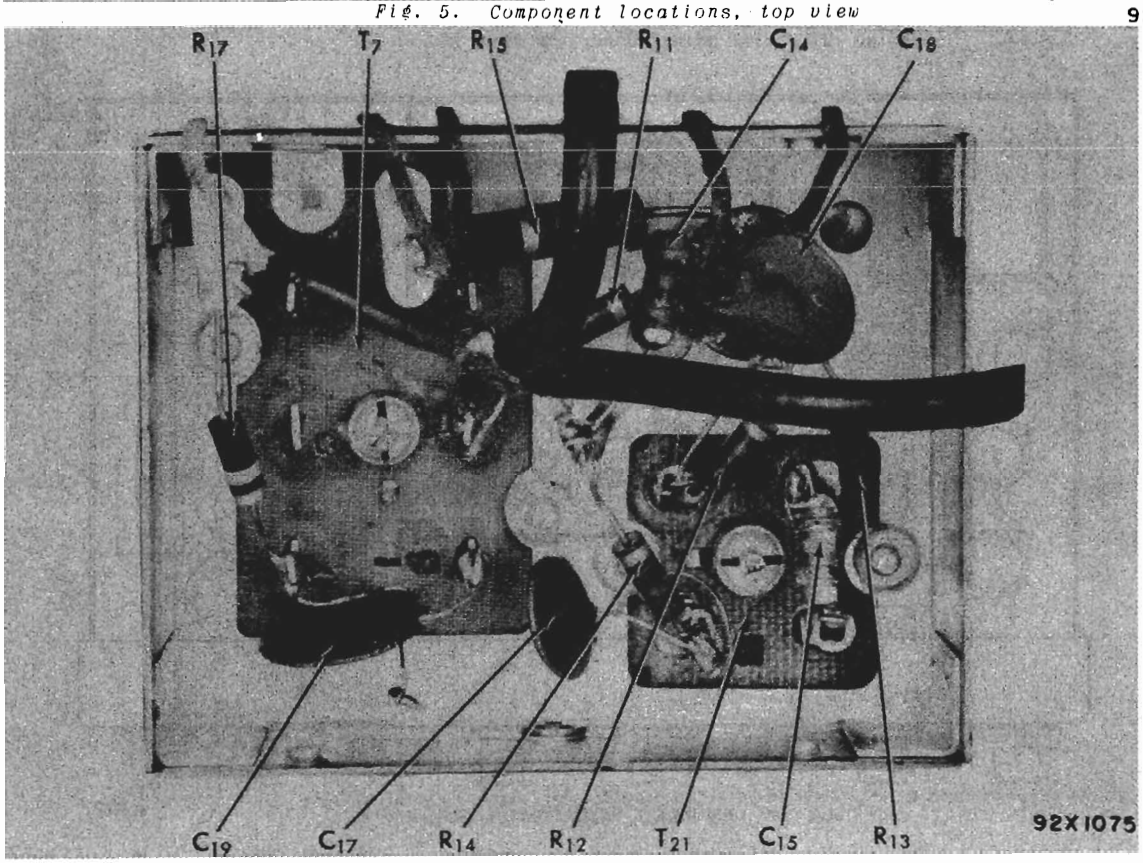

Fig. 6. Component locations, bottom view second converter unit

©John F. Rider

Compliments of www.nucow.com

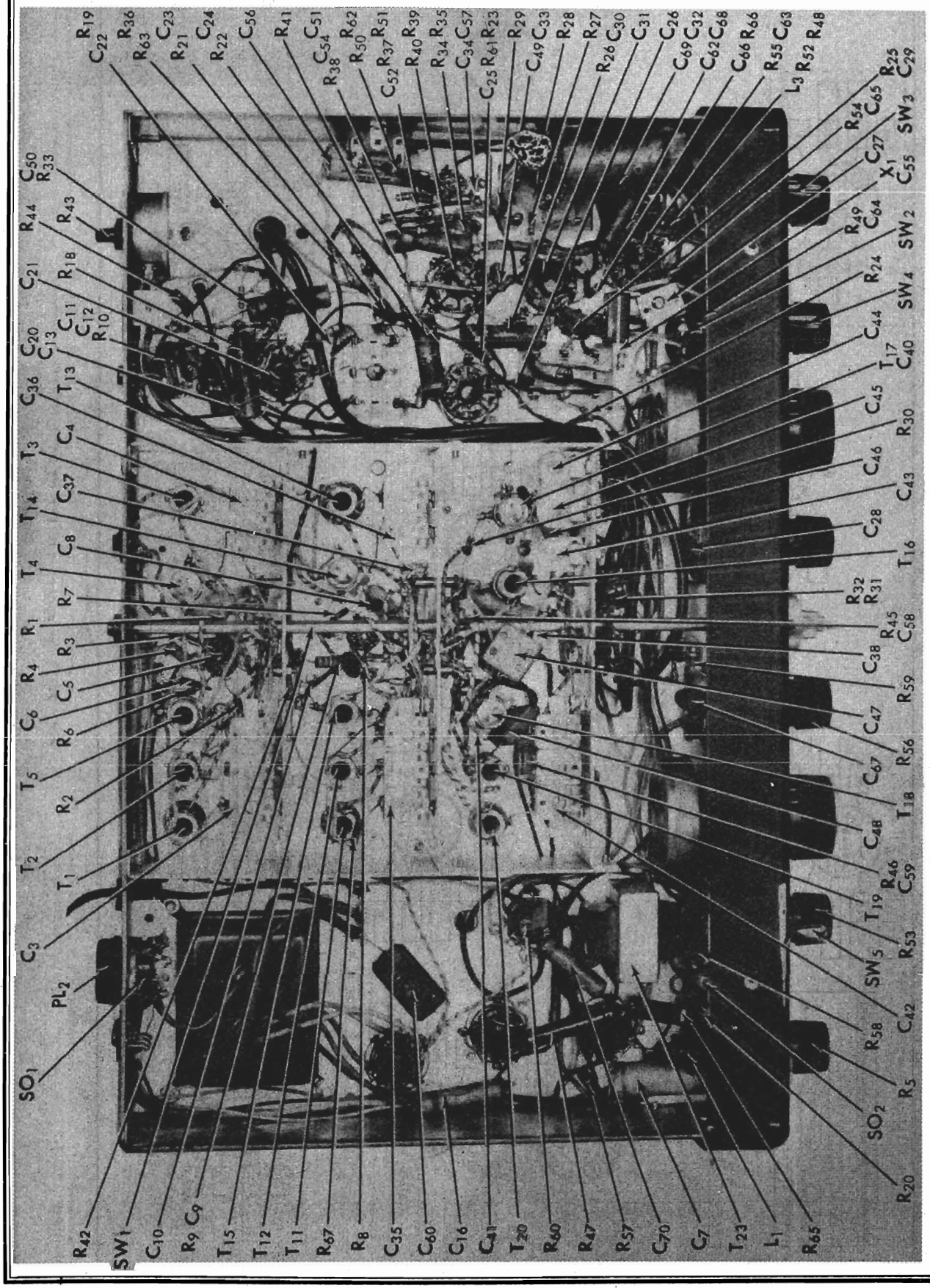

92X967

Fig. 7. Component locations, bottom view

©John F. Rider

Compliments of www.nucow.com

MODEL SX-71

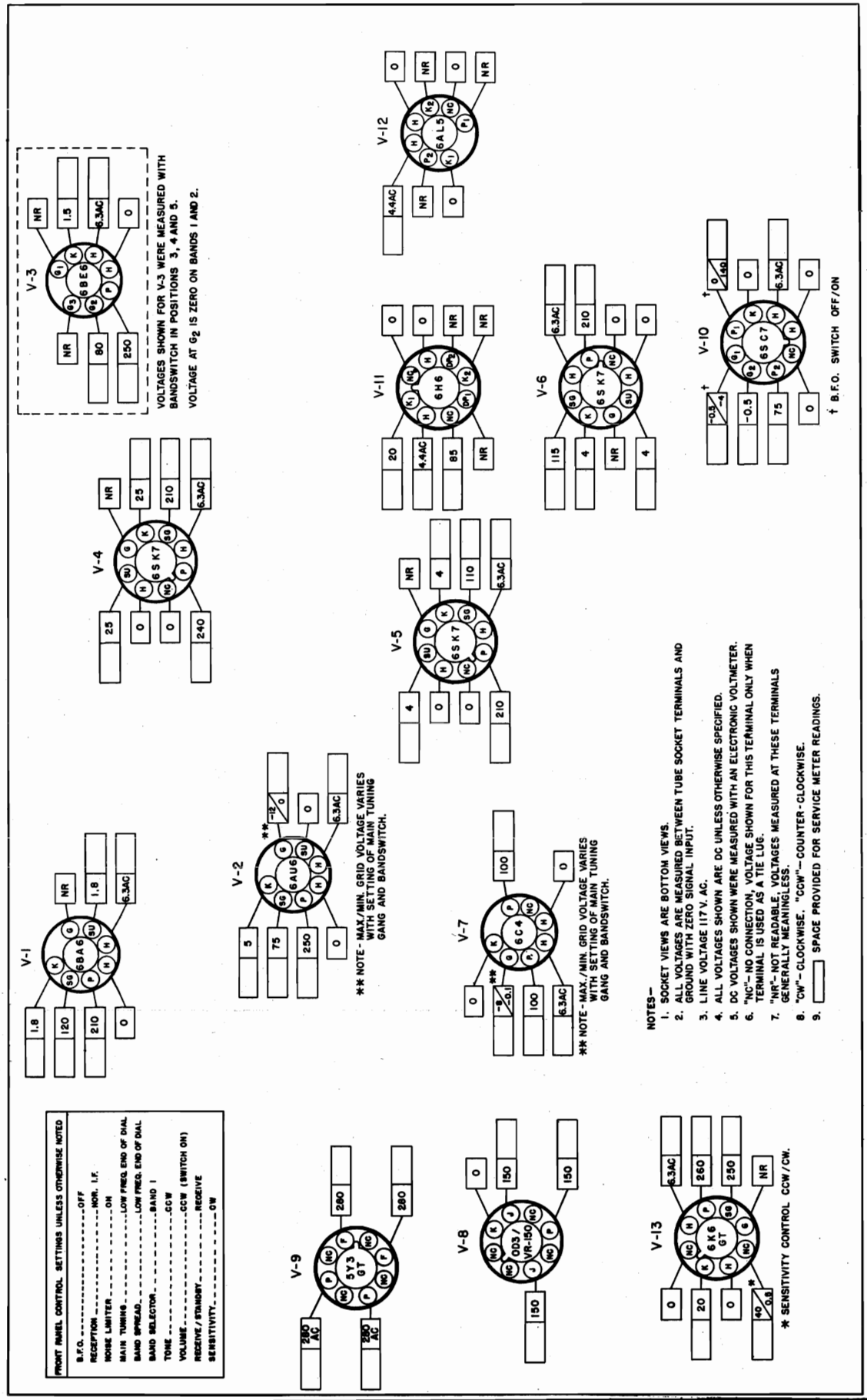

Fig. 9. Tube socket voltage chart

©John F. Rider

Compliments of www.nucow.com

SERVICE PARTS LIST

Ref. No.	Description	Manufacturer's Part Number
	CONDENSERS	
C-1	Capacitor, MAIN TUNING (3 section)	48D209
C-2	Capacitor, BANDSPREAD (3 section)	48C210
C-3	Trimmer Ass'y, antenna stage (Bands 1, 2 & 5)	44B381
C-4	Trimmer Ass'y, antenna stage (Bands 3 & 4)	44B379
C-5,33,34, 52,57, 63,68	220 mmf. 500 V., ceramic	47B20221K5
C-6,10,19, 67	2 x 4,000 mmf. 450 V., ceramic	47A218
C-7	.25 mfd. 200 V., tubular	46AT254J
C-8,14,38, 41,58	100 mmf. 500 V., ceramic	47X20UJ101K
C-9,12,17, 18,21,22, 23,25,26, 31,64,65,	5,000 mmf. 450 V., ceramic	47A168
**C-11,13	300 mmf. 500 V., mica	47X20B301J
C-15	47 mmf. 500 V., ceramic	47X20UK470K
C-16,20,24, 30,50	.05 mfd. 400 V., tubular	46AW503J
C-27	Trimmer, adjustable	44A047
C-28	Capacitor, variable CRYSTAL PHASING	48A182
C-29	33 mmf. 500 V., mica	47X20A330K
C-32	.25 mfd. 600 V., tubular	46AX254J
C-35	Trimmer Ass'y, mixer stage (Bands 1, 2 & 5)	44B382
C-36	Trimmer Ass'y, mixer stage (Bands 3 & 4)	44B380
C-37	15 mmf. 500 V., ceramic	47X20UJ150K
C-39	2.2 mmf. 450 V., ceramic	47A160-4
C-40,49	25 mmf. 500 V., ceramic	47X20UK250K
C-42	Trimmer Ass'y, oscillator stage (Bands 1 & 2)	44B383
C-43,44,45	Trimmer Ass'y, oscillator stage (Bands 3, 4, & 5)	44A378
**C-46	2200 mmf. 500 V., mica	47X30D222J
**C-47	910 mmf. 500 V., mica	47X30D911J
**C-48	1500 mmf. 500 V., mica	47X30D152G
C-51	.1 mfd. 200 V., tubular	46AU104J
C-54	.02 mfd. 200 V., tubular	46AU203J
C-55	10 mmf. 500 V., ceramic	47X20UK100K
C-56	1 mfd. 50 V., electrolytic	45A163
**C-59	Capacitor, temperature compensator	44A158
**C-60	.01 mfd. 600 V., moulded	46X35X103M
C-61	60-20 mfd. 450 V., & 20 mfd. 400 V., electrolytic	45B113
C-62,70	.01 mfd. 600 V., tubular	46AY103J
C-66	1 mmf. 450 V., ceramic	47A160-2
C-69	470 mmf. 500 V., mica	47X20B471J
	RESISTORS	
R-1,30	10 ohms 1/2 watt, carbon	23X20X100K
R-2,13	15 ohms 1/2 watt, carbon	23X20X150K
R-3,41	1 megohm 1/2 watt, carbon	23X20X105K
R-4,44	82 ohms 1/2 watt, carbon	23X20X820K
R-5	Resistor, variable, 10,000 ohms, SENSITIVITY control	25B582
R-6	8200 ohms 1/2 watt, carbon	23X20X822K
R-7,39,66	2.2 megohms 1/2 watt, carbon	23X20X225K
R-8	2200 ohms 1/2 watt, carbon	23X20X222K

Ref. No.	Description	Manufacturer's Part Number
	RESISTORS (Cont.)	
R-9	330,000 ohms 1/2 watt, carbon	23X20X334K
R-10, 24, 28,42	3300 ohms 1/2 watt, carbon	23X20X332K
R-11	220 ohms 1/2 watt, carbon	23X20X221K
R-12,45,52	22,000 ohms 1/2 watt, carbon	23X20X223K
R-14,48	150 ohms 1/2 watt, carbon	23X20X151K
R-15,46,60	10,000 ohms 1 watt, carbon	23X30X103K
R-17,21,25, 49,55	100,000 ohms 1/2 watt, carbon	23X20X104K
R-18,22,26	270 ohms 1/2 watt, carbon	23X20X271K
R-19,27	33,000 ohms 1/2 watt, carbon	23X20X333K
R-20	47,000 ohms 1 watt, carbon	23X30X473K
R-23	6800 ohms 1/2 watt, carbon	23X20X682K
R-29	56,000 ohms 1/2 watt, carbon	23X20X563K
R-31	680 ohms 1/2 watt, carbon	23X20X681K
R-32,33	2700 ohms 1/2 watt, carbon	23X20X272K
R-34,35,40	470,000 ohms 1/2 watt, carbon	23X20X474K
R-36	180,000 ohms 1/2 watt, carbon	23X20X184K
R-37	82,000 ohms 1/2 watt, carbon	23X20X823K
R-38,50,59	220,000 ohms 1/2 watt, carbon	23X20X224K
R-43	Resistor, variable, 500 ohms, S-METER ADJUSTMENT	25C022
R-47	Resistor, 2500 ohms 10 watts, wirewound	24BG252D
R-51	39,000 ohms 1/2 watt, carbon	23X20X393K
R-53	Resistor, variable, 500,000 ohms, VOLUME control	25B604
R-54	15 megohms 1/2 watt, carbon	23X20X156K
R-56	Resistor, variable, 500,000 ohms, TONE control	25B589
R-57,58	560 ohms 1 watt, carbon	23X30X561K
R-61,62	6.8 ohms 1 watt, carbon	23X30X068K
R-63	27,000 ohms 1/2 watt, carbon	23X20X273K
R-65	47,000 ohms 2 watts, carbon	23X40X473K
R-67	100 ohms 1/2 watt, carbon	23X20X101K
	TRANSFORMERS AND COILS	
T-1	Transformer, antenna stage, band 1	51B1088
T-2	Transformer, antenna stage, band 2	51B1089
T-3	Transformer, antenna stage, band 3	51B1090
T-4	Transformer, antenna stage, band 4	51B1091
T-5	Transformer, antenna stage, band 5	51B1092
T-6	Transformer, 1st IF (2.075 MC)	50C414
T-7,8	Transformer, 1st and 2nd IF (455 KC)	50C416
T-9	Transformer, 3rd IF (455 KC)	50C415
T-10	Transformer, FM detector	50C418
T-11	Transformer, mixer stage, band 1	51B1093
T-12	Transformer, mixer stage, band 2	51B1094
T-13	Transformer, mixer stage, band 3	51B1095
T-14	Transformer, mixer stage, band 4	51B1096
T-15	Transformer, mixer stage, band 5	51B1097
T-16	Transformer, osc. stage, band 5	51B1160
T-17	Transformer, osc. stage, band 4	51B1101

* Used on universal model SX-71U only.
** Use exact replacement part only.

©John F. Rider

Compliments of www.nucow.com

MODEL SX-71

Ref. No.	Description	Manufacturer's Part Number
	TRANSFORMERS AND COILS (Cont.)	
T-18	Transformer, osc. stage, band 3	51B1100
T-19	Transformer, osc. stage, band 2	51B1099
T-20	Transformer, osc. stage, band 1	51B1098
T-21	Transformer, 2.53 MC osc. stage, bands 3, 4 and 5	50C448
T-22	Transformer, power	52C174
*T-22	Transformer, power (Universal)	52C175
T-23	Transformer, output	55B120
L-1	Choke, RF	53A107
L-2	Choke, filter	56B107
L-3	Coil, BFO	54B039
	SWITCHES	
SW-1	Switch, BAND SELECTOR	
	Section 1 (Antenna stage) and Section 2 (Mixer stage)	62B051
	Section 3 (Osc. grid)	62B049
	Section 4 (Osc. plate)	62B050
	Section 5 (Converter plate and bias)	62B048
SW-2	Switch, RECEPTION	60B343
SW-3	Switch, BFO-OFF	60A285
SW-4	Switch, NOISE LIMITER-OFF	60A138
SW-5	Switch, RECEIVE-STANDBY	60A139
	PLUGS AND SOCKETS	
PL-1	Line Cord	87B1573
PL-2	Plug, AC shorting	35A003
SO-1	Socket, POWER (DC operation)	6B296
SO-2	Jack, PHONES	36A036
SO-3	Jack, PHONO	36A041
	Socket, octal (tube)	6B296
	Socket, octal (tube) with center shield	6A315
	Socket, miniature	6A347
	Socket, tuning dial scale lamps	86B092
	Socket, carrier lever meter dial lamps	86B091
	TUBES, RECTIFIERS AND LAMPS	
V-1	Type 6BA6, RF amplifier	90X6BA6
V-2	Type 6AU6, 1st converter	90X6AU6
V-3	Type 6BE6, 2nd converter	90X6BE6
V-4,5	Type 6SK7, 1st and 2nd IF amplifiers	90X6SK7
V-6	Type 6SH7, 3rd IF amplifier	90X6SH7
V-7	Type 6C4, oscillator	90X6C4
V-8	Type VR-150/OD3, voltage regulator	90XVR-150/OD3
V-9	Type 5Y3GT, rectifier	90X5Y3GT
	TUBES, RECTIFIERS AND LAMPS (Cont.)	
V-10	Type 6SC7, 1st audio amplifier and beat frequency oscillator	90X6SC7
V-11	Type 6H6, automatic volume control and automatic noise limiter	90X6H6
V-12	Type 6AL5, detector	90X6AL5
V-13	Type 6K6GT, audio output	90X6K6GT
LM-2,3	Lamp, carrier level meter light GE #44	39A003
LM-1,4	Lamp, main dial scale light GE #47	39A004
	MISCELLANEOUS	
TS-1	Terminal strip, antenna	88A032
TS-2	Terminal strip, speaker	88B578
	Escutcheon, meter	7B124
M-1	Meter, carrier level	82B166
	Plate, dial drive mounting	63B415
	Bracket, pulley mounting	67A1140
	Pulley, small idler	28A078
	Pulley, large idler	28A079
	Cord, dial	38A019
	Spring, dial cord	75A173
	Pointer, bandspread and main tuning	82A169
	Scale, dial	83D358
	Window, dial	22C284
	Flywheel, bandspread and main tuning	71A178
	Drum, bandspread and main tuning gang drives	28A080
	Shaft, bandspread and main tuning pulley drives	74A298
	Shaft, bandspread and main tuning gang drives	74A299
	Ring, retainer, tuning assembly drive shafts	76A552
	Ring, retainer, tuning assembly pulley shafts	76A551
	Washer, spring	4A043
	Coupling, bandspread gang shaft	29A126
	Coupling, main tuning gang shaft	29A123
	Shaft and index plate, band switch	74B267
	Collar, band switch	77A055
	Lock, line cord	76A397
	Knob, BANDSPREAD and MAIN TUNING	15A047
	Knob, CRYSTAL PHASING	15A087
	Knob, CW PITCH	15A089
	Knob, POWER-VOLUME, TONE and SENSITIVITY	15A097
	Knob, BAND SELECTOR	15B209
	Knob, RECEPTION	15A212
	Foot, rubber	16A007
X-1	Crystal, 455 KC	19A123

* Used on universal model SX-71U Only.

REPLACING LAMPS

Refer to Fig. 8 for the location of the dial lamps in the receiver. To gain access to the defective lamps, remove the chassis from the cabinet by removing the screws on the sides and bottom. The two end lamps are fastened by screws to an angle bracket. Remove the screws and change the lamp using a type Mazda #47 (brown bead) or equivalent. To change the two dial lamps in the center, remove the screws holding the sockets in place and replace the lamps using a type Mazda #44 (blue bead) or equivalent.

"S" METER ADJUSTMENT

MECHANICAL:

Turn off the receiver.

Immediately below the dial face of the "S" meter is a round metal disc. This disc is pivoted so that it may be moved to one side. Doing this discloses the pivot adjustment screw of the "S" meter. Use a screw driver and carefully rotate the screw in either direction until the needle indicates zero.

ELECTRICAL ADJUSTMENT:

Turn the receiver on.

Set the RECEIVE/STANDBY switch at RECEIVE.
Set BFO at OFF
Set the SENSITIVITY control at maximum.
Set the NOISE-LIMITER at OFF.
Short the antenna terminals to ground.

The "S" meter adjustment control is located on the left rear apron of the chassis. Turn this control slowly until the needle in the "S" meter indicates zero.

©John F. Rider

Compliments of www.nucow.com

MODEL S X-71

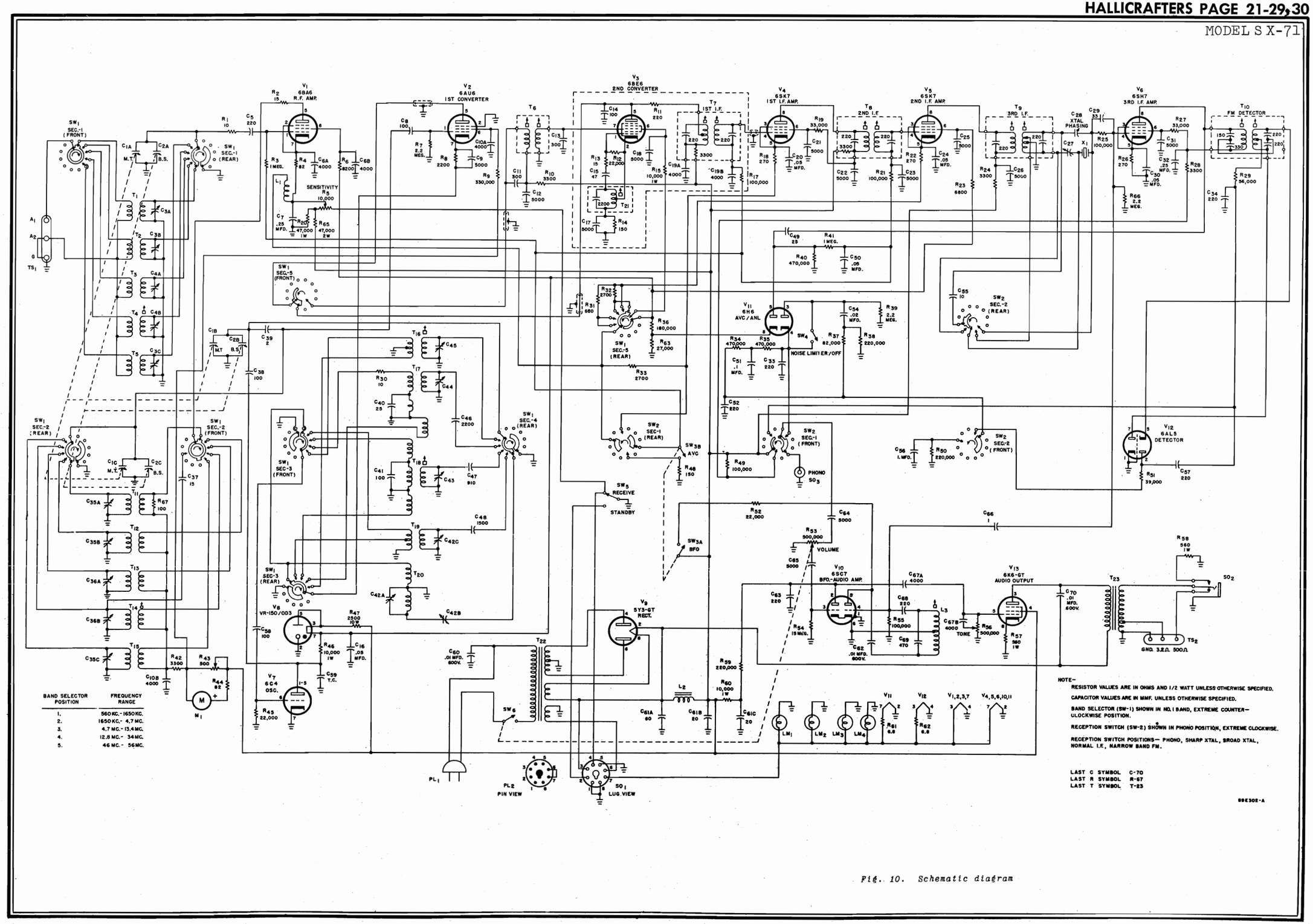

Fig. 10. Schematic diagram

©John F. Rider

Compliments of www.nucow.com

MODEL S-72L

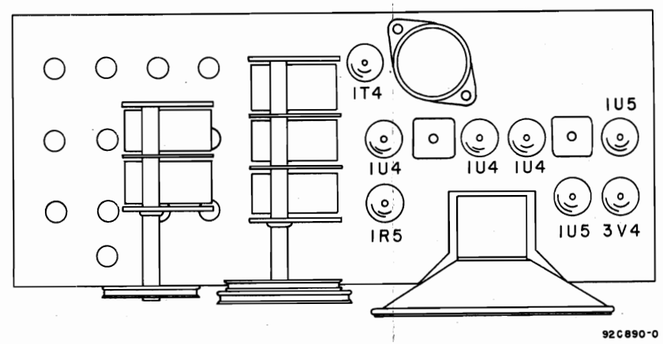

Fig. 8. Top view, location of tubes

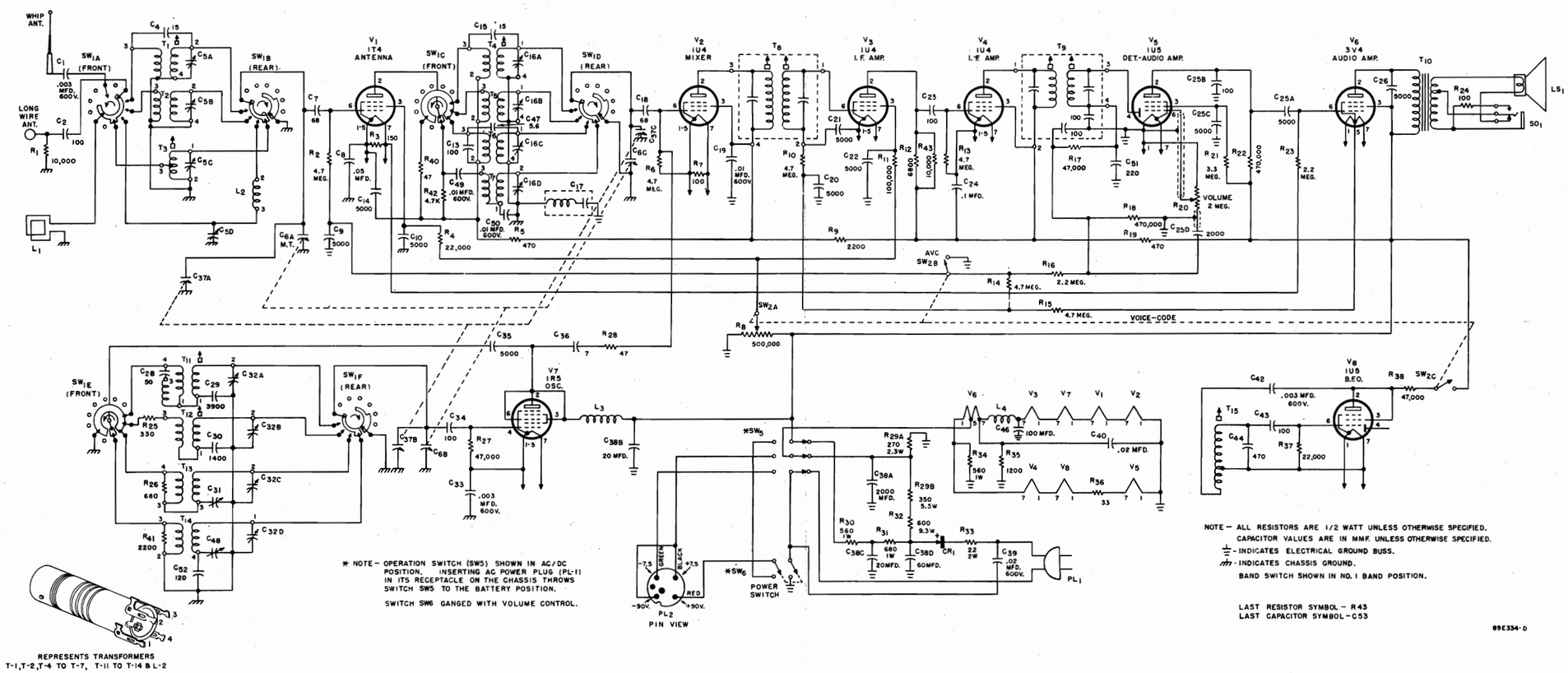

Fig. 9. Schematic diagram.

©John F. Rider

Compliments of www.nucow.com

GENERAL

Tubes	Eight plus selenium rectifier
Speaker	5-inch PM
Speaker V.C. Impedance	3.2 ohms (100 ohm headset tap)
Headset Output	For 500 to 5000-ohm phones
Antenna	Loop for bands 1 and 2. Whip for bands 3 and 4. Provisions for connection to an external antenna
Tuning	Manual
Tuning Range	

Band Selector Position	*Frequency Range
1.	180 kc - 400 kc
2.	550 kc - 1600 kc
3.	1.6 mc - 4.4 mc
4.	4.5 mc - 11.5 mc

*First and last dial calibration.

Intermediate Frequency	455 kc.
Power Supply	105-125 V. DC/60 cycles AC or Battery Pack
Power Consumption	25 Watts

RESTRINGING DIAL CORD

GENERAL COVERAGE DIAL

The general coverage dial drive is a two string system, one between the drive shaft and the rear gang drum and the other between the front gang drum and the general coverage dial pointer. The drive shaft system requires a 30-inch length of 30 lb test dial cord, and the pointer system requires a 24-inch length of the same type cord.

To restring the drive shaft system, tie the string at position "1" (Fig. 1) and follow the sequence "1" through "11". Stretch the tension spring at "11" and tie the cord securely.

To restring the general coverage pointer drive system, tie the string at position "A" (Fig. 1) and follow the Sequence "A" through "I". Stretch the tension spring at "I" and tie the cord securely. Set the general coverage gang at maximum capacity and attach and index the pointer with the left hand reference mark on the dial scale.

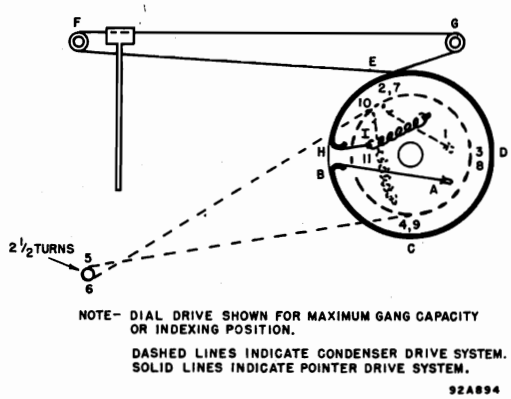

Fig. 1. Dial cable stringing procedure, general coverage

BAND SPREAD DIAL

To restring the bandspread tuning dial drive, cut an 18-inch length of 30 lb test dial cord and tie one end to the pulley anchor at position "1" shown in Fig. 2. String up the drive following the sequence "1" through "12" and at position "12" stretch the tension spring and tie the cord securely. Set the bandspread gang at minimum capacity and attach and index the pointer at "0" on the bandspread scale.

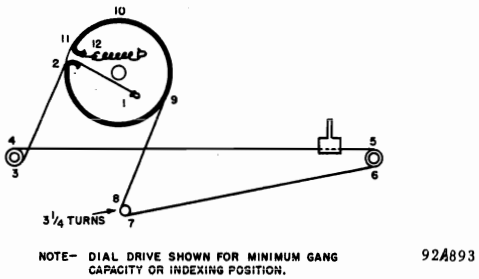

Fig. 2. Cable stringing procedure, band spread

BATTERY REPLACEMENT

A strip of canvas webbing and a hold down screw are used to keep the battery in the cabinet. To replace the battery, disconnect the battery plug and loosen the hold down screw. Refer to Fig. 3.

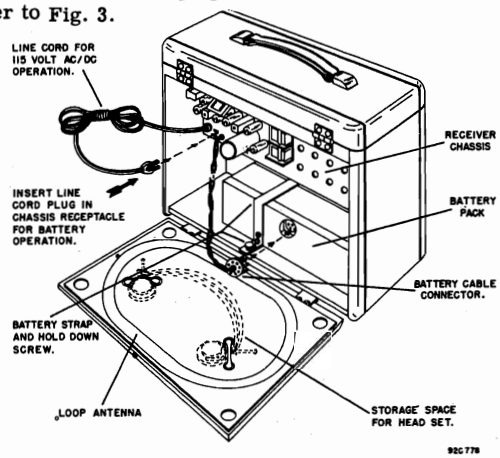

Figure 3. Battery compartment

©John F. Rider

Compliments of www.nucow.com

MODEL S-72L

Suitable replacement packs can be found from the list shown below.

REPLACEMENT BATTERY LIST

Manufacturer	Type No.	Manufacturer	Type No.
BRIGHT STAR	66-50	OLIN	0615 0614
BURGESS	G6M60 F6A60	RAY-O-VAC	AB878 AB994
DELCO	8760	RCA	VS018 VS019
EVERREADY	754 753	SEARS ROEBUCK	67E605
GENERAL	60BF65 60A6F65	USALITE	680
MONTGOMERY WARD	62A35M 62A33	WESTERN WIZARD	60B6F6/5 60A6F6/5
NATIONAL UNION	N808		

NOTE - Only one battery pack of the type listed above is required.

CAUTION - When the receiver is to operate on batteries it is necessary to insert the line cord plug in the chassis receptacle as shown in Fig. 3.

ALIGNMENT PROCEDURE

It will be necessary to remove the battery and receiver chassis from the cabinet to make the I.F. alignment adjustments. To do this remove the knobs and jack nut from the control panel; remove the panel escutcheon and unfasten the phone jack; unsolder the antenna connections, two for the loop antenna and one for the whip antenna; and remove the two wood screws anchoring the angle brackets of the chassis to the cabinet and lift out of the case.

The primaries of the I.F. transformers are adjusted from the bottom of the chassis and the secondaries are adjusted from the top of the chassis.

Before making any alignment adjustments, check the general coverage dial pointer and bandspread dial pointer for proper index. The general coverage dial pointer should index with its gang condenser set at maximum capacity and the bandspread dial pointer should index at zero with its gang condenser set at minimum capacity.

Set the following controls before alignment.

VOLUME . . . . . Set at maximum

VOICE/CODE . . . . . Set max. clockwise (VOICE)

BAND SPREAD . . . . Set at 0

ALIGNMENT CHART

Step	Dummy Antenna	Signal Generator Coupling	Signal Generator Frequency	Band Switch Setting	Receiver Dial Setting	Adjust	Remarks
1.	None	Stator plates in center section of tuning gang	455 kc	"1"	1000 kc	A,B,C,D	Maximum audio output at speaker voice coil. Use just enough signal generator output to obtain a 50 mw signal level.
2.	None	See step 1.	455 kc (No mod.)	"1"	1000 kc	E	With the VOICE/CODE control set for code reception, adjust E for a 1000 cycle note.
3.	10 mmf from ext. antenna lead to chassis.	Couple the generator to the ext. ant. lead thru a 15 mmf capacitor	11.5 mc	"4"	11.5 mc	*F,G,H	Maximum output as in step 1.
			5 mc		5 mc	*S1,S2, S3	
4.	See step 3	See step 3	4.4 mc	"3"	4.4 mc	*I,J,K	Maximum output as in step 1.
			1800 kc		1800 kc	*S4	
**5.	See step 3	See step 3.	1500 kc	"2"	1500 kc	*L,M,N	Maximum output as in step 1.
			600 kc		600 kc	*P	
**6.	See step 3.	See step 3.	400 kc	"1"	400 kc	*Q,R,S	Maximum output as in step 1.
			180 kc		180 kc	*T,U	

NOTES -

*Calibration adjustment.
**Loop must be connected for this step.

©John F. Rider

Compliments of www.nucow.com

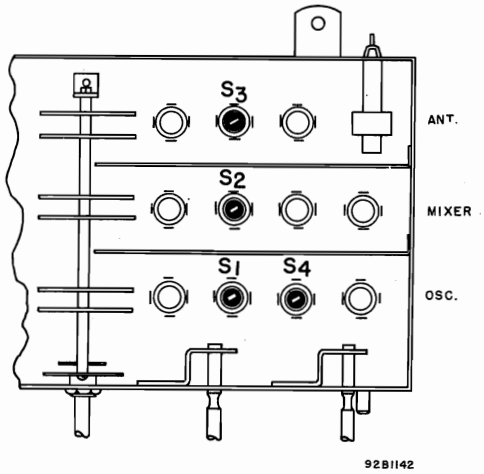

Bottom view alignment points.

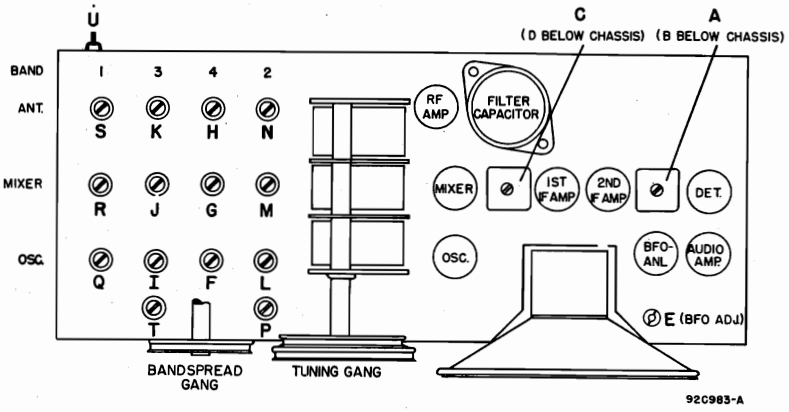

Figure 4. Alignment points

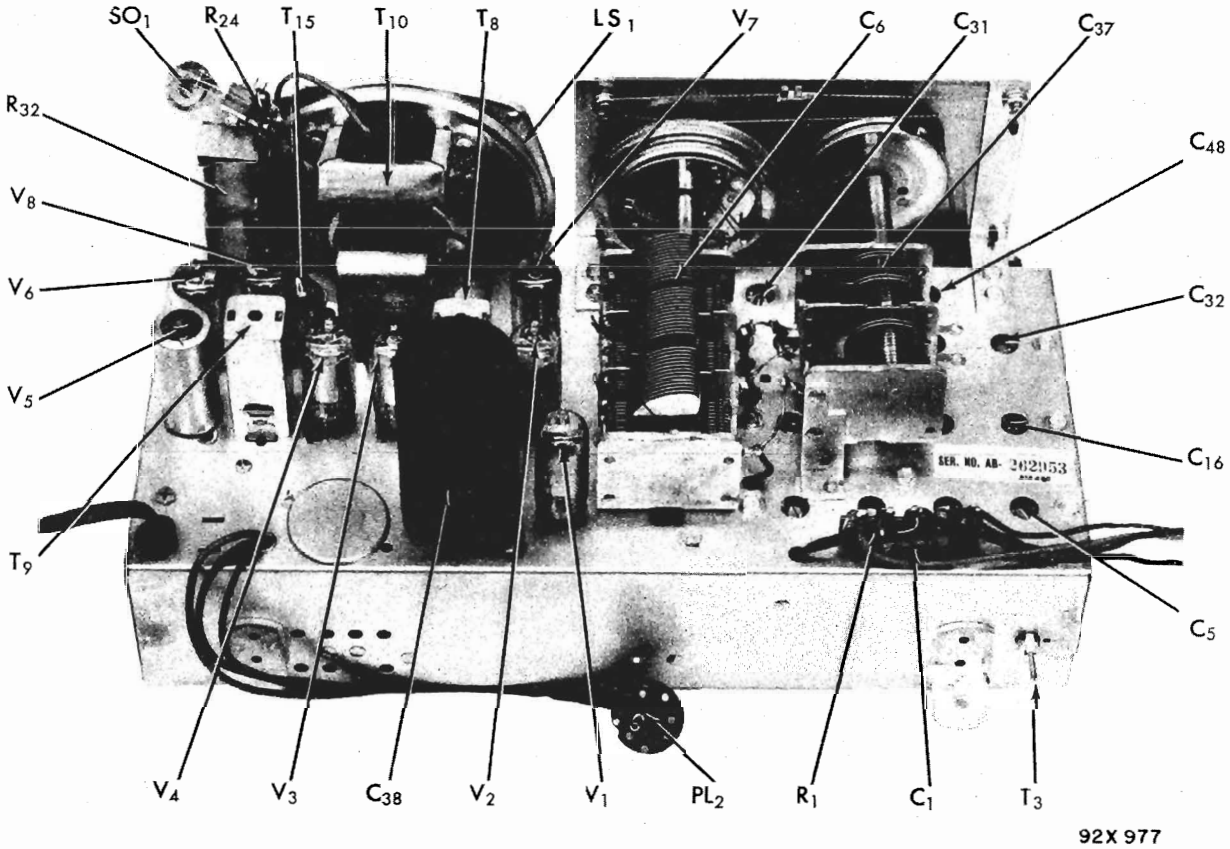

Figure 5. Top view, component location

©John F. Rider

Compliments of www.nucow.com

MODEL S-72L

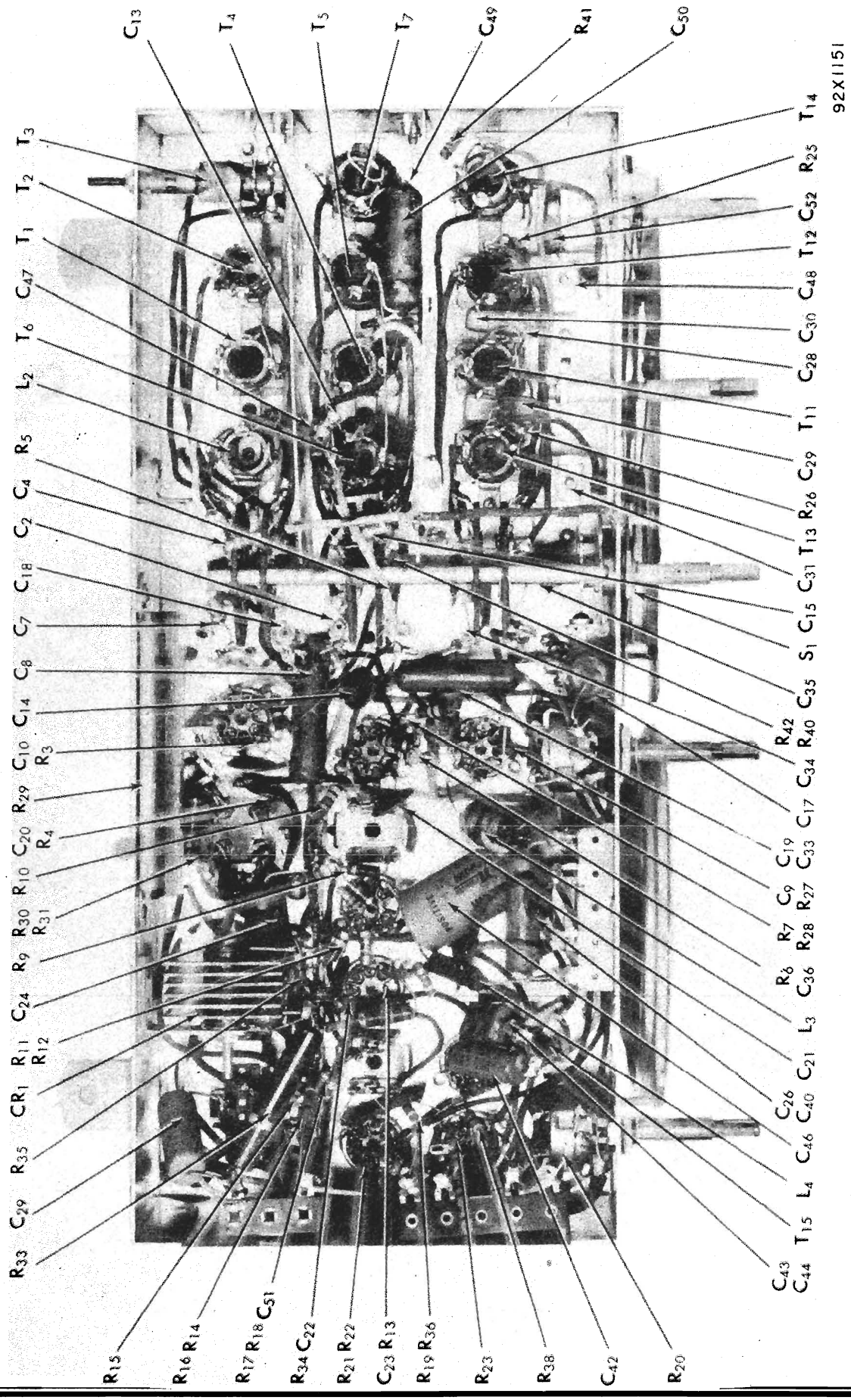

Figure 6. Bottom view, component location

©John F. Rider

Compliments of www.nucow.com

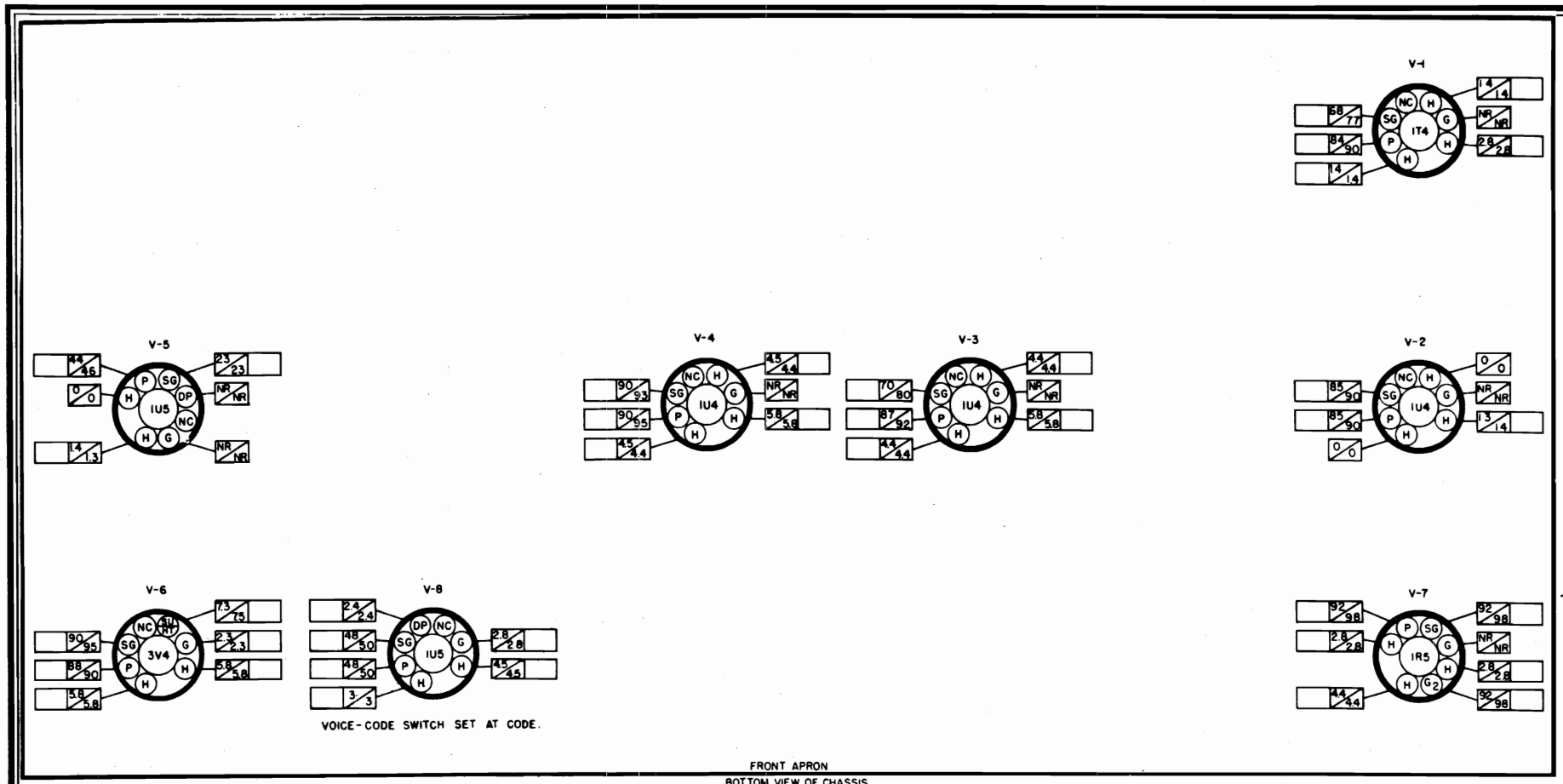

NOTES —
1. SOCKET VIEWS ARE BOTTOM VIEWS
2. ALL VOLTAGES ARE MEASURED BETWEEN TUBE SOCKET TERMINALS & THE ELECTRICAL GROUND BUSS (NOT CHASSIS) WITH ZERO SIGNAL INPUT
3. LINE VOLTAGE — 117V. AC BATTERY VOLTAGES TAKEN WITH FRESH BATTERY PACK.
4. ALL VOLTAGES SHOWN ARE DC UNLESS OTHERWISE SPECIFIED
5. DC VOLTAGES SHOWN WERE MEASURED WITH AN ELECTRONIC VOLTMETER
6. "NC" — NO CONNECTION
7. "NR" — NOT READABLE (READING GENERALLY MEANINGLESS)
8. ▭ SPACE PROVIDED FOR SERVICE METER READINGS.
9. ▭ UPPER VOLTAGE READINGS IN INDICATOR SPACE SHOW BATTERY OPERATION.
10. VOLTAGES FOR TUBE V-8, ARE SHOWN WITH VOICE-CODE SWITCH IN CODE POSITION.
11. ALL READINGS TAKEN WITH LINE PLUG POLARIZED SO THAT GROUND BUSS & CHASSIS ARE AT SAME POTENTIAL AS THE CHASSIS GROUND.

92D777

Figure 7. Tube socket voltage chart

©John F. Rider

Compliments of www.nucow.com

MODEL S-72L

SERVICE PARTS LIST

Ref. No.	Description	Manufacturer's Part Number
	CAPACITORS	
C-1,33,42	.003 mfd., 600 V., tubular	46AZ302J
C-2,13,23,34	100 mmf., 500 V., ceramic	47B20101K5
C-4,15	15 mmf., 500 V., ceramic	47B20150K5
C-5	Trimmer, ant. ass'y., 4 sections (Bands 1,2,3,4)	44B385
C-6	Tuning capacitor, 3 sections	48C221
C-7,18	68 mmf., 500 V., ceramic	47B20680K5
C-8	.05 mfd., 200 V., tubular	46AU503J
C-9,10,14,20 21,22,26 35	5000 mmf., 500 V., ceramic	47A168
C-16	Trimmer, mixer ass'y., 4 sections, (Bands 1,2,3,4)	44B386
C-17	Capacitor, resonant (455KC)	46A174
C-19,49,50	.01 mfd., 600 V., tubular	46AY103J
C-24	.1 mfd., 200 V., tubular	46AU104J
C-25	Capacitor, composite; .002, .005, .0001, .005 mfd., 500 V., ceramic	47A203
C-28	50 mmf., 500 V., ceramic	47B20500K5
C-29	3900 mmf., 500 V., mica	47X35A392J
C-30	1400 mmf., 500 V., mica	47X30A142J
C-31	Padder, adjustable (Band 2)	44A376
C-32	Trimmer, osc. ass'y., 4 section (Bands 1,2,3,4)	44B387
C-36	7 mmf., 500 V., ceramic	47X20UK070K
C-37	Capacitor, band spread	48C227
C-38	60-20-20 mfd., 150 V., 2000 mfd., 15 V., electrolytic	45B162
C-39	.02 mfd., 600 V., moulded paper	46BR203L6
C-40	.02 mfd., 200 V., tubular	46AU203J
C-43	100 mmf., 500 V., mica	47X20A101M
C-44	470 mmf., 500 V., mica	47X20A471K
C-46	100 mfd., 25 V., electrolytic	45A116
C-47	5.6 mmf., 500 V., composition	47A160-7
C-48	Padder, adjustable (Band 1)	44A384
C-51	220 mmf., 500 V., ceramic	47B20221K5
C-52	120 mmf., 500 V., mica	47X20B121K
	RESISTORS	
R-1,43	10,000 ohms, 1/2 watt, carbon	23X20X103K
R-2,6,10, 13,14,15	4.7 megohms, 1/2 watt, carbon	23X20X475M
R-3	150 ohms, 1/2 watt, carbon	23X20X151K
R-4,37	22,000 ohms, 1/2 watt, carbon	23X20X223K
R-5,19	470 ohms, 1/2 watt, carbon	23X20X471K
R-7,24	100 ohms, 1/2 watt, carbon	23X20X101K
R-8	Resistor, variable, 500,000 ohms, VOICE/CODE control	25B847
R-9,41	2200 ohms, 1/2 watt, carbon	23X20X222K
R-11	100,000 ohms, 1/2 watt, carbon	23X20X104K
R-12	6800 ohm, 1/2 watt, carbon	23X20X682K
R-16,23	2.2 megohms, 1/2 watt, carbon	23X20X225M
R-17,27,38	47,000 ohms, 1/2 watt, carbon	23X20X473K
R-18,22	470,000 ohms, 1/2 watt, carbon	23X20X474K
R-20	Resistor, variable, 2 megohms, VOLUME control	25B839
R-21	3.3 megohms, 1/2 watt, carbon	23X20X335M
R-25	330 ohms, 1/2 watt, carbon	23X20X331K
R-26	680 ohms, 1/2 watt, carbon	23X20X681K
R-28,40	47 ohms, 1/2 watt, carbon	23X20X470K
R-29	270 ohms, 2.3 watts; 350 ohms, 5.5 watts; WW	24A912
R-30,34	560 ohms, 1 watt, carbon	23X30X561K
R-31	680 ohms, 1 watt, carbon	23X30X681K
R-32	600 ohms, 9.3 watts, WW	24A913
R-33	22 ohms, 2 watts, WW	24BV220E
R-35	1200 ohms, 1/2 watt, carbon	23X20X122K
R-36	33 ohms, 1/2 watt, carbon	23X20X330K
R-42	4700 ohms, 1/2 watt, carbon	23X20X472K

Ref. No.	Description	Manufacturer's Part Number
	TRANSFORMERS AND COILS	
T-1	Transformer, antenna stage, band 4	51B1250
T-2	Transformer, antenna stage, band 3	51B1137
T-3	Transformer, antenna stage, band 1	51B1191
T-4	Transformer, mixer stage, band 4	51B1253
T-5	Transformer, mixer stage, band 3	51B1248
T-6	Transformer, mixer stage, band 2	51B1247
T-7	Transformer, mixer stage, band 1	51B1192
T-8	Transformer, 1st I.F.	50C233
T-9	Transformer, 2nd I.F.	50C234
T-10	Transformer, audio output (part of speaker ass'y. LS-1)	
T-11	Transformer, osc. stage, band 4	51B1254
T-12	Transformer, osc. stage, band 3	51B1255
T-13	Transformer, osc. stage, band 2	51B1144
T-14	Transformer, osc. stage, band 1	51B1193
T-15	Transformer, B.F.O. (With mtg. clip)	50B402
L-1	Loop antenna	57C125
L-2	Coil, antenna loading band 2	51B1136
L-3	Choke, R.F.	53A008
L-4	Choke, filament	53A121
	SWITCHES	
SW-1	Switch, band (6 section ass'y. complete)	60C380
SW-2	Switch, VOICE/CODE, (Part of r-f gain control, R-8)	
SW-5	Switch, AC/DC - battery change over	60A363
SW-6	Switch, ON-OFF (D.P.S.T. power switch, part of volume control R-20)	
	PLUGS AND SOCKETS	
PL-1	Line cord	87B1683
PL-2	Battery plug, 6 prong	10A344
SO-1	Jack, phone	36A036
	TUBES AND RECTIFIERS	
V-1	Type 1T4, r-f amplifier	90X1T4
V-2,3,4	Type 1U4, mixer, 1st and 2nd i-f amplifier	90X1U4
V-5,8	Type 1U5, detector and B.F.O.	90X1U5
V-6	Type 3V4, audio power amplifier	90X3V4
V-7	Type 1R5, oscillator	90X1R5
CR-1	Rectifier, selenium	27A151
	MISCELLANEOUS	
	Socket, 7 prong miniature (tube)	6B300
	Lock, line cord (Female)	76A397-2
	Lock, line cord (Male)	76A397-1
	Escutcheon	7D109
	Escutcheon, dial	22B250
	Plate, dial (calibrated)	83C359
	Knob	15B172
	Knob (with dot)	15B177
	Pointer, main tuning	82A161
	Pointer, band spread	82A161-1
	Cord, dial drive	38A001
	Cord, pointer drive	38A017
	Spring, dial drive	75A012
	Pulley, idler	28A052-7
	Shaft, tuning	74A274
	Antenna, whip	57B142
	Antenna, insulator	65A534
LS-1	Speaker	85C093
	Strap, battery	76B467
	Cabinet	78F491

©John F. Rider

Compliments of www.nucow.com

The RF section uses separate oscillator and mixer tubes to allow maximum conversion gain over the short wave bands. The mixer and I.F. stages use 12SH7 high frequency type tubes and the sensitivity thus obtained is higher than normally obtained with an additional stage. Full AVC action is provided with both I.F. and mixer tubes controlled. Diode detection is used for maximum fidelity. The 12A6 beam power output is driven by the pentode section of the 12C8, giving adequate output. Inverse feedback is used from the voice coil winding to the 12A6 cathode, improving the frequency response.

The power supply uses a 5Y3 full wave rectifier and a husky, high quality varnish impregnated power transformer, with a metal cased filter condenser for adequate filtering and long life, thus providing full operating voltages for all tubes.

NOTE: If replacement of the 1626 oscillator tube is required, either another 1626, or a 12J5 tube may be used.

The band switching coil unit is assembled on a separate small chassis to simplify its construction resulting in one of the simplest coil turrets ever designed. The IF transformers are of the dual iron core tuned type which give the greatest gain per stage and are far more stable than the cheaper trimmer type usually supplied. The six inch calibrated slide rule dial has a 9 to 1 vernier drive to allow tuning of weak short wave signals.

Upon completion of the wiring, the tuned circuits must be aligned to produce maximum sensitivity and selectivity, and to calibrate the dial scale. If a signal generator is available (your own, or borrowed from a friend), follow the procedure as outlined. If a signal generator cannot be obtained, we suggest that you have your local radio service man align the receiver in accordance with the instructions in this manual.

For local reception, a short indoor antenna is generally sufficient. For best reception, a high outdoor antenna is recommended. The antenna should be connected to the antenna terminal (screw terminal nearest edge of chassis).

A ground connection may improve reception also, and should be tried if maximum performance is desired. For a good ground, use a COLD water pipe or a ground rod. Use as short and direct a wire as possible between the pipe or rod and the ground terminal (screw terminal farthest from edge of chassis).

A loudspeaker of the PM dynamic type with 3-4 ohm voice coil impedance should be connected to the set by attaching the two prong speaker plug to the speaker leads and plugging into the speaker socket. If a 6-8 ohm speaker is available, it may be used without materially affecting the performance. For best results in small cabinets, we recommend the Heathkit 5" speaker (Stock #320). If a larger cabinet is available, the Heathkit 8" speaker (Stock #325) will provide better reproduction of the lower register.

A record player or changer using a crystal type pickup cartridge may be connected to this receiver to provide superior reproduction of recordings. Connect the pickup by plugging the lead into the phono socket. If your player does not have the standard plug, remove existing plug and attach the phono plug supplied with the kit. Plug the line cord for the turn table motor into the 110V. outlet on the chassis.

The phono-radio switch is combined with the tone control. Turning the control fully counter-clockwise connects the record player, while turning the control fully clockwise connects the radio circuits. Full use of the tone control is possible on either switch setting.

Four controls are provided on the front of the receiver. From left to right, they are the on-off switch and volume control, the phono-radio switch and tone control, the tuning control and the bandswitch.

NOTE: The pilot light is connected in the rectifier circuit to permit the use of a standard pilot light bulb. The socket is, therefor, about 300 Volts above chassis. DO NOT TOUCH SOCKET WITH SET TURNED ON.

©John F. Rider

Compliments of www.nucow.com

MODEL AR-1

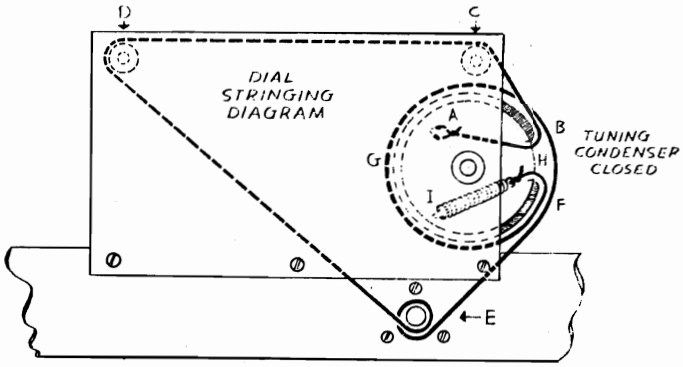

TOP VIEW OF CHASSIS SHOWING LOCATION OF TUBES - I.F. ADJUSTMENT SCREWS - B.C. PADDER (SEE COIL BRACKET PICTORIAL FOR S.W. - POLICE - B.C. ADJUSTMENT SCREWS) . . . . . .

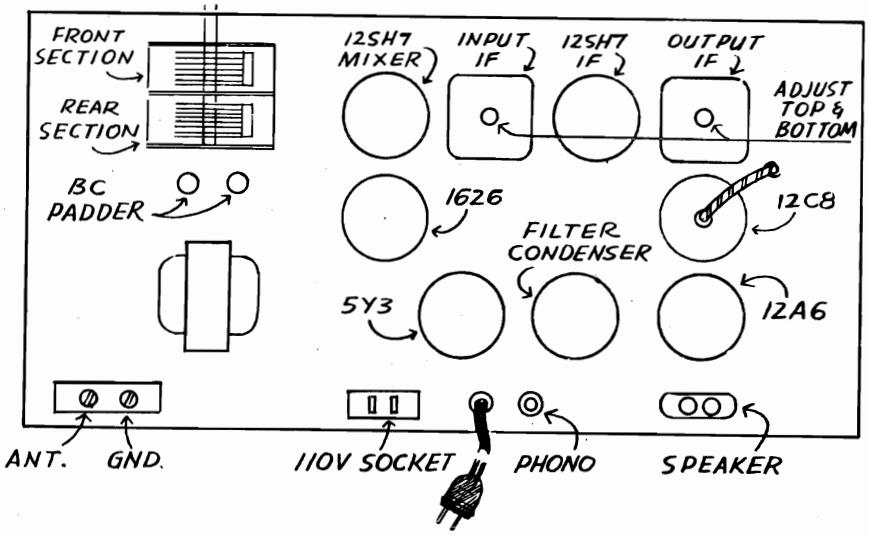

ALIGNMENT

Connect a signal generator ground lead to the chassis. Connect the signal generator output ("hot") lead through a .01 MFD condenser to pin #4 on the 12SH7 IF socket (IF grid). Turn signal generator on and set to 456 kc. The signal, if modulated, may be observed by noting the loudness at the speaker, or on the scale of an output meter connected across the speaker terminals. If the signal is unmodulated it may be observed on the scale of a vacuum tube voltmeter connected across the volume control. With the volume and tone controls turned fully clockwise, turn the brass screws in the top and bottom of the output IF transformer for maximum indication. Use as low an indication as possible by reducing the output from the signal generator as the receiver sensitivity increases.

Without disturbing the signal generator dial, remove the .01 MFD condenser from pin #4 on the 12SH7 IF socket and connect to pin #4 on the 12SH7 mixer socket (mixer grid). Set band switch to center (BC) position. Remove 1626 (oscillator) tube from its socket. Adjust the brass screws in top and bottom of input IF transformer for maximum indication as described in step 23. Note: Do not adjust the output IF screws with the signal generator connected to the converter grid. This completes the IF alignment.

Replace the oscillator tube. Remove the generator from the converter grid. Connect the generator to the ANT. post through a 400 ohm resistor (used as dummy antenna). Set band-switch clockwise to SW position. Turn tuning condenser till fully unmeshed or open. Set signal generator to 20.5 MC. Adjust the SW oscillator trimmer for reception of signal. Then check if setting is correct by tuning signal generator to 21.412 MC. (approximately), where the image should be observed. If the second signal is found at a signal generator setting of 19.588 MC. (approximately), the SW oscillator trimmer should be unscrewed slightly until proper response is obtained. Now set signal generator to 18 MC. Tune receiver to receive this signal at 18 MC., and adjust SW antenna trimmer for maximum indication. This completes the SW alignment.

©John F. Rider

Compliments of www.nucow.com

Set the bandswitch counter clockwise to the police band. Turn tuning condenser till fully unmeshed or open. Set signal generator to 5.6 MC. Adjust the police oscillator trimmer for reception of signal. Then check if setting is correct by tuning signal generator to 6.512 MC. (approximately), where the image should be observed. If the second signal is observed at a signal generator setting of 4.688 MC. (approximately), the police oscillator trimmer should be unscrewed until proper response is obtained. Now set signal generator to 5.0 MC. Tune receiver to receive this signal at 5.0 MC., and adjust police antenna trimmer for maximum indication. This completes the police band alignment.

Remove the 400 ohm resistor and use a 250 MMF condenser instead in series with the signal generator to the ANT. post. Set the bandswitch to center position (BC). Turn tuning condenser till fully unmeshed or open. Set signal generator to 1620 kc. Adjust the BC oscillator trimmer for reception of signal. Reset signal generator to 540 kc. Turn tuning condenser till fully meshed or closed. Adjust the BC Padder for maximum indication. Recheck the BC oscillator trimmer adjustment, as above. Set signal generator to 1500 kc. Tune receiver to receive this signal at 1.5 MC., and adjust BC antenna trimmer for maximum indication. This completes the alignment of the receiver.

Check the voltages at the tube sockets. A table of approximate voltages is given below. These readings were obtained with a Heathkit VTVM with 11 megohms input resistance. Variations of plus or minus 15% may be expected.

Pin No.	1626	12SH7 Mixer	12SH7 I.F.	12C8	12A6	5Y3
1	0	0	0	0	0	
2	10-14 VAC	10-14 VAC	10-14 VAC	10-14 VAC	10-14 VAC	290-330
3	70-120	1-2	½-1	50-90	280-320	
4	0	Slightly Neg.	Slightly Neg.	Slightly Neg.	220-260	300-340VAC
5	5-50 V Neg.	1-2	½-1	Slightly Neg.	0	
6		120-150	120-150	25-50		300-340VAC
7	0	0	0	0	0	Tie Point
8	0	220-260	220-260	0	9-15	290-330

HEATHKIT REPLACEABLE PARTS AVAILABLE

AR29 15-10 MFD--El. Cond. . .
AR10 Dual Tuning Cond. . . . .
AR18 1 Meg. Control w. Sw. . .
AR41 500 K. Control w. Sw. . . .
AR37 4 Pole 3 pos. Bandsw. . .
BR16 Input IF Transformer . . .
BR17 Output IF Transformer . .
BR24 Power Transformer. . . .
AR44 Output Transformer. . . .
BR13 Ant. Pri. (BC) Coil . . . .
BR14 Ant. Sec. (BC) Coil . . . .
BR15 Oscillator (BC) Coil. . . .
PR10 Ant. (Police) Coil.. .. . . .
PR11 Oscillator (Police) Coil . .
SR10 Ant. (SW) Coil . . . . . .
SR11 Oscillator (SW) Coil. . . .
AR48 Panel . . . . . .

©John F. Rider

Compliments of www.nucow.com

MODEL AR-1

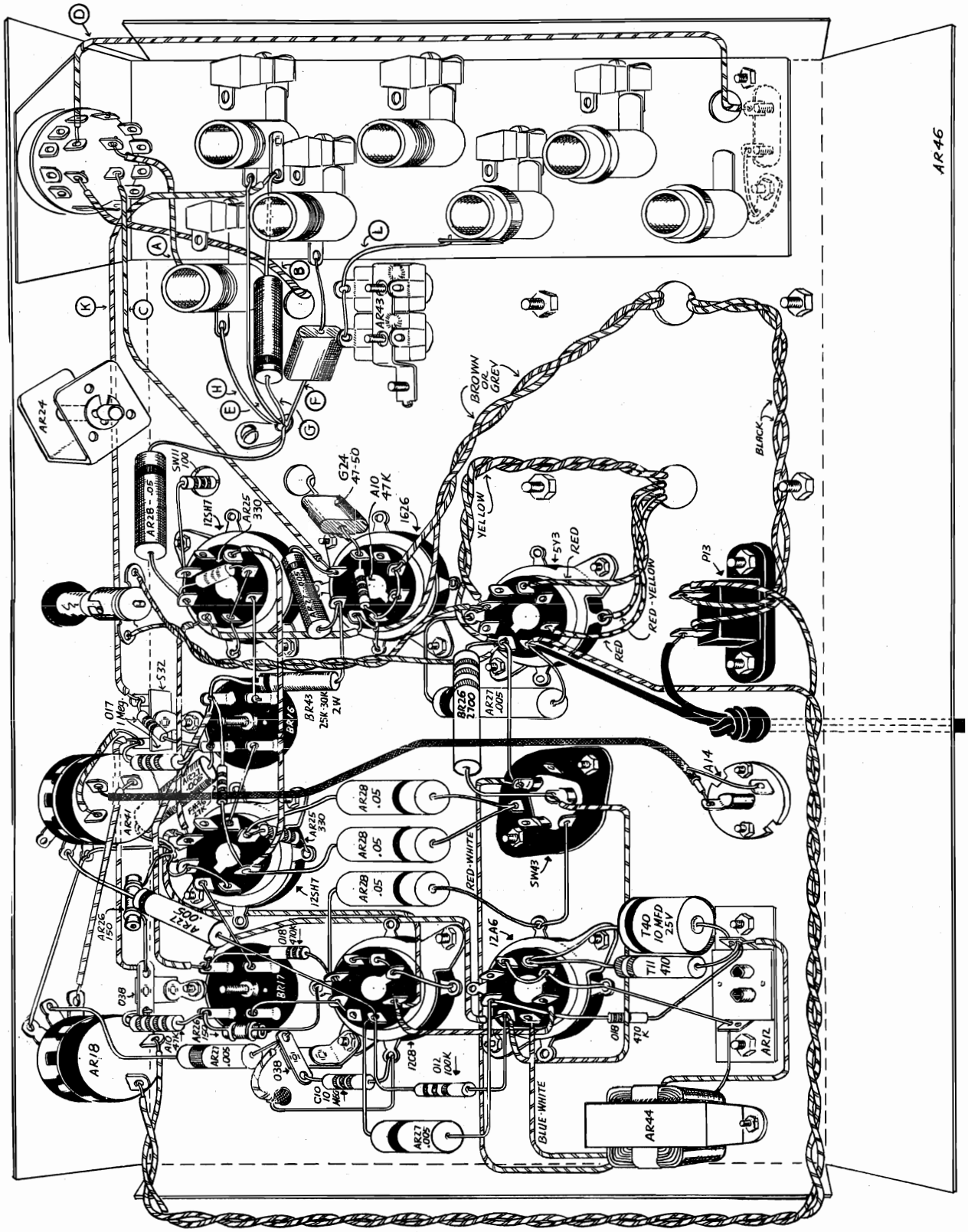

© John F. Rider

Compliments of www.nucow.com

MODEL AR-1

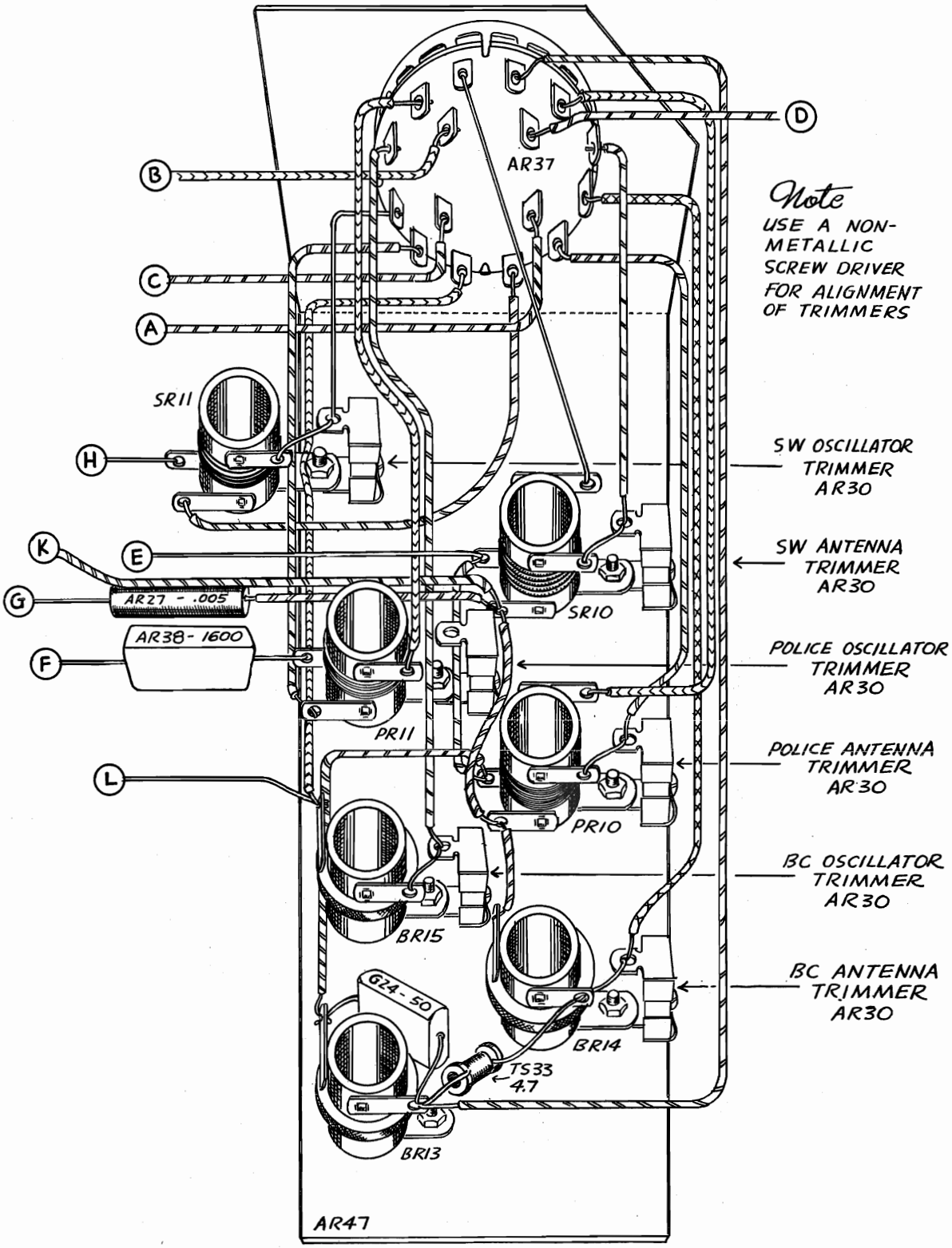

©John F. Rider

Compliments of www.nucow.com

MODEL AR-1

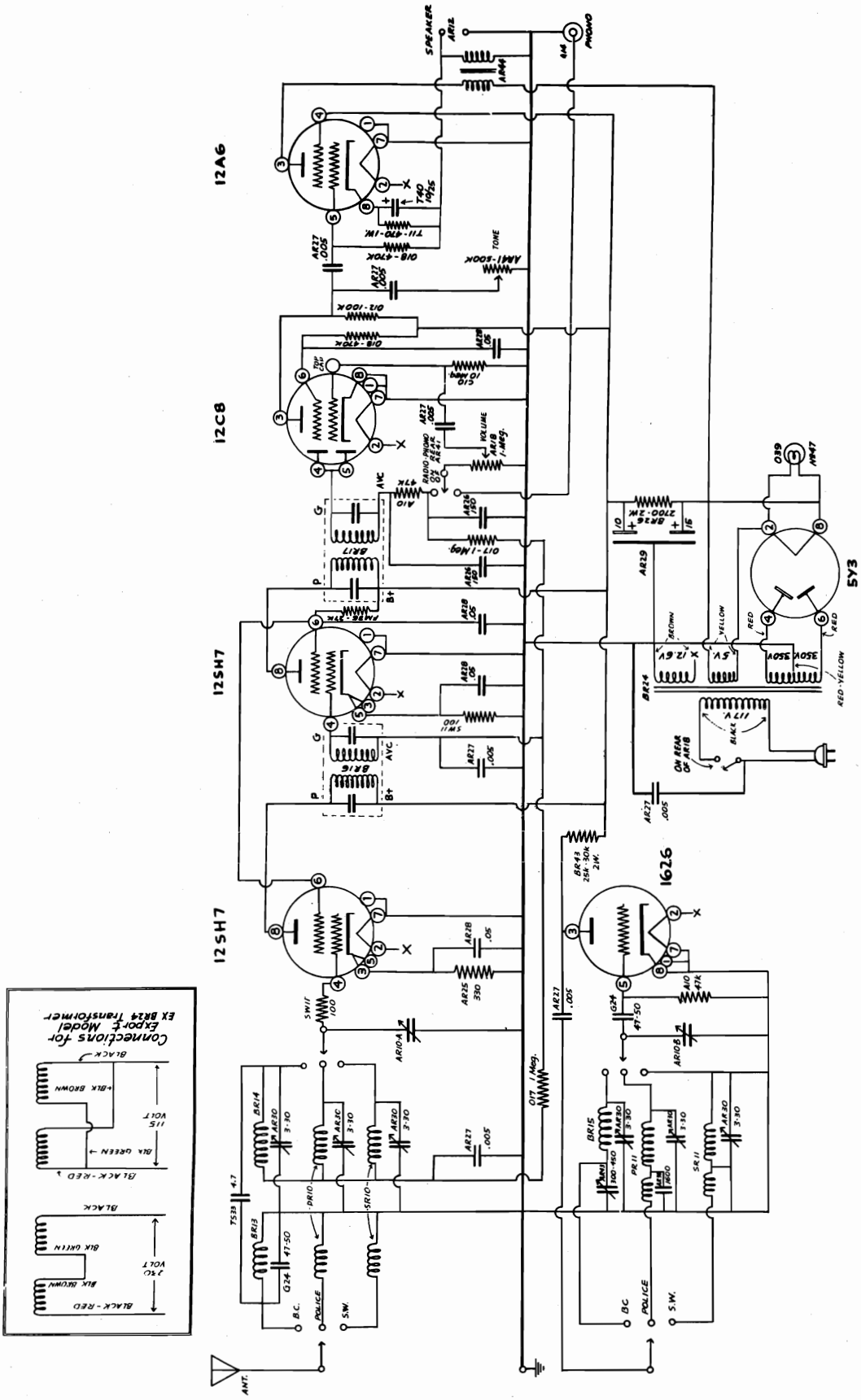

©John F. Rider

Compliments of www.nucow.com

AR - 1 PARTS LIST

Part No.	Parts Per Kit	Description
Resistors		
SW11	2	100 Ohm
AR25	1	330 Ohm
T11	1	470 Ohm 1 Watt
BR26	1	2,700 Ohm 2 Watt
FM36	1	27 K Ohm
BR43	1	25K-30K Ohm 2 Watt
A10	2	47 K Ohm
O12	1	100 K Ohm
O18	2	470 K Ohm
O17	2	1 Megohm
C10	1	10 Megohm
Condensers		
TS33	1	4.7 MMF Ceramic
G24	2	47-50 MMF Mica
AR26	2	150 MMF Ceramic
AR38	1	1,600 MMF Mica
AR27	7	.005 MFD Paper
AR28	4	.05 MFD Paper
T40	1	10 MFD-25V. Electrolytic
AR29	1	15 - 10 MFD-450V Electro-
AR30	6	3-30 MMF Trimmer
AR43	1	300-450 MMF Padder
AR10	1	Dual tuning Condenser
Coils		
BR13	1	Ant. Pri (BC)
BR14	1	Ant. Sec. (BC)
BR15	1	Oscillator (BC)
PR10	1	Antenna (Police)
PR11	1	Oscillator (Police)
SR10	1	Antenna (SW)
SR11	1	Oscillator (SW)
BR16	1	Input IF Transformer
BR17	1	Output IF Transformer
Controls-Switches		
AR18	1	1 Megohm with SPST Sw.
AR41	1	500K Ohm with SPDT Sw.
AR37	1	4 Pole 3 Pos. Bandswitch
Tubes-Lamps		
K42	1	1626 or 12J5 tube
AR31	2	12SH7 or 12SH7GT Tubes
K24	1	12C8 Tube.
K23	1	12A6 or 12A6GT Tube
O66	1	5Y3GT Tube
O39	1	#47 Pilot Lamp
Grommets-Wafer-Clip-Lugs		
O35	1	3/8 Grommet
C24	1	7/16 Grommet
SW43	1	Condenser Mounting Wafer
K18	1	Grid Clip
O37	2	Solder Lugs

Part No.	Parts Per Kit	Description
Sockets-Plugs-Terminal Strips		
AR32	6	Tube Sockets
AR12	1	Speaker Socket
AR13	1	Speaker Plug
A14	1	Phono Socket
A19	1	Phono Plug
P13	1	110V Socket
C25A	1	Pilot Lamp Socket
FM17	1	Dual Binding Post
O38	2	Single Terminal Strip
S32	1	Dual Terminal Strip
Dial Parts-Knobs		
AR42	1	Dial Drum Assembly
AR16	1	Dial Plate Assembly
FM20	1	Dial Cord
FM21	1	Dial Cord Spring
AR33	1	Dial Pointer
AR24	1	Drive Shaft Bracket
AR21	1	Drive Shaft
AR23	2	"E" Washers
V48	4	Acorn Knobs
Transformers		
BR24	1	Power
AR44	1	Output
Screws-Nuts-Washers-Spacers		
O31	41	6-32 x ⅜ Screws
IB48	1	6-32 x 1 Screw
TC46	7	#6 x ⅝ Sheet Metal Screws
G52	4	8-32 x ⅜ Screws
S22	43	6-32 Nuts
TP16	4	8-32 Nuts
O33	4	Control Nuts
TS72	46	#6 Lockwashers
BR36	4	#8 Lockwashers
O101	4	Control Lockwashers
FM18	1	8-32 x 3/16 Set Screw
AR35	3	⅛" Spacer
AR45	3	3/16" Spacer
AR36	5	⅜" Spacer
Wire-Spaghetti		
AR19	1	Line Cord
IB43	1	Length Bare Wire
A21	1	Length Shielded Wire
O77	1	Roll Hookup Wire
O81	1	Length Spaghetti
CHASSIS PARTS		
AR46	1	Chassis
AR47	1	Coil Mounting Bracket
BR35	1	Panel
BR19	4	Angle Brackets

©John F. Rider

Compliments of www.nucow.com

MODEL BR-1

A ground connection may improve reception also, and should be tried if maximum performance is desired. For a good ground, use a COLD water pipe or a ground rod. Use as short and direct a wire as possible between the pipe or rod and the ground terminal (screw terminal farthest from edge of chassis).

A loudspeaker of the PM dynamic type with 3-4 ohm voice coil impedance should be connected to the set by attaching the two prong speaker plug to the speaker leads and plugging into the speaker socket. If a 6-8 ohm speaker is available, it may be used without materially affecting the performance.

A record player or changer using a crystal type pickup cartridge may be connected to this receiver to provide superior reproduction of recordings. Connect the pickup by plugging the lead into the phono socket. If your player does not have the standard plug, remove existing plug and attach the phono plug supplied with the kit. Plug the line cord for the turn table motor into the 110V. outlet on the chassis. Turn the phono switch clockwise to switch from radio to record player.

NOTE: The pilot light is connected in the rectifier circuit to permit the use of a standard pilot light bulb. The socket is, therefor, about 300 Volts above chassis. DO NOT TOUCH SOCKET WITH SET TURNED ON.

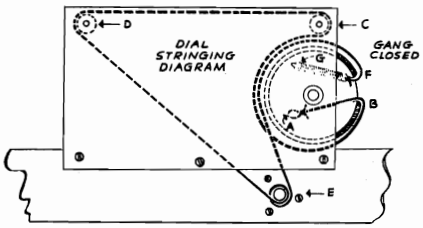

ALIGNMENT

Connect a signal generator ground lead to the chassis. Connect the signal generator output ("hot") lead through a .01 MFD condenser to pin #4 on the 12SH7 socket (IF grid). Turn signal generator on and set dial to 456 Kc. The signal, if modulated, may be observed by noting the loudness at the speaker, or on the scale of an output meter connected across the speaker terminals, or with the aid of a vacuum tube voltmeter across the volume control. With the volume and tone controls turned fully clockwise, turn the brass screws in the output IF transformer for maximum indication. Use as low an indication as possible by reducing the output from the signal generator as the receiver sensitivity increases.

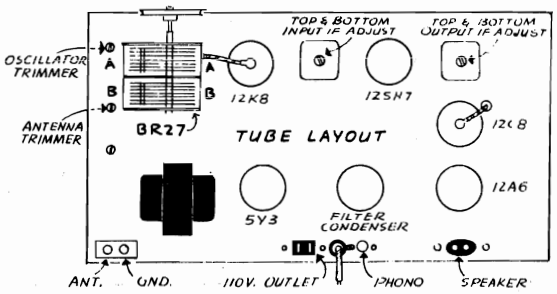

Without disturbing the signal generator dial, remove the .01 MFD condenser from pin #4 on the 12SH7 socket and connect to the grid cap of the 12K8 tube. Adjust the brass screws in the input IF transformer as above. NOTE: Do not adjust the output IF screws with the signal fed into the 12K8 tube. This completes the IF alignment.

Connect the signal generator output lead through a 200-300 MMF condenser to the ANT. terminal. Turn the tuning control until the condenser plates are fully unmeshed. Set the signal generator to 1720 Kc. Adjust the oscillator trimmer till the signal is noted. Reset the signal generator to 1400 Kc. Find the signal by turning the receiver tuning control. Now adjust the antenna trimmer for maximum indication. This completes the alignment. A short antenna should now bring in many stations.

©John F. Rider

Compliments of www.nucow.com

MODEL BR-1

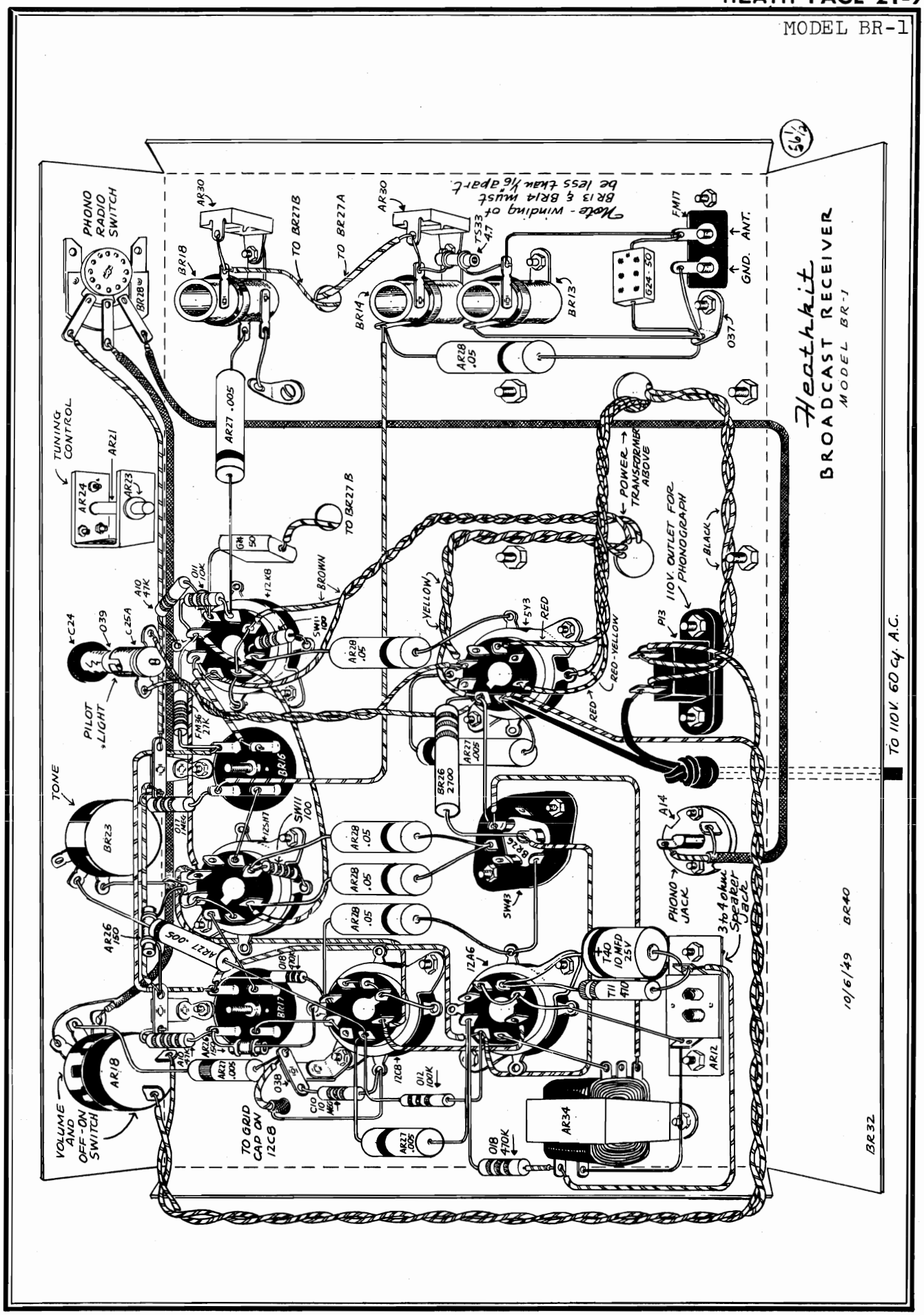

©John F. Rider

Compliments of www.nucow.com

MODEL BR-1

Pin No.	12K8	12SH7	12C8	12A6	5Y3
1					
2	11-14 VAC	11-14 VAC	11-14 VAC	11-14 VAC	300-340
3	250-290	$\frac{1}{2}$ - $1\frac{1}{2}$	40-60 (15-30)	300-340	
4	100-130	Very slight neg.	Very slight neg.	250-290	300-340 VAC
5	5-15 V neg.	$\frac{1}{2}$ - $1\frac{1}{2}$	Very slight neg.	0	
6	80-100	100-130	25-45 (10-20)		300-340 VAC
7	0	0	0	0	Tie Point
8	$\frac{1}{2}$-$1\frac{1}{2}$	250-290	0	14-19	300-340
	12K8	12SH7	12C8	12A6	

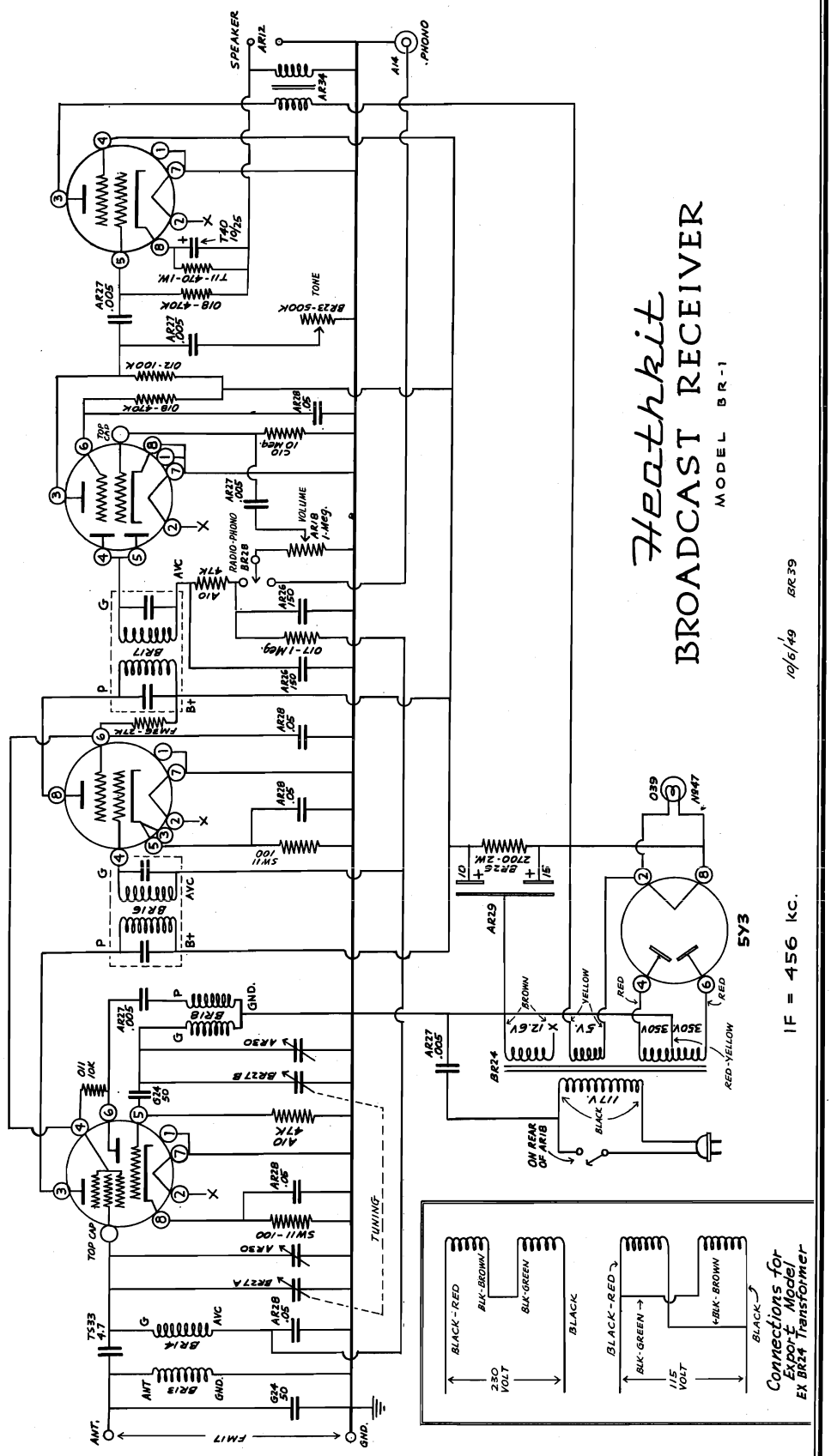

©John F. Rider

Compliments of www.nucow.com

MODEL BR-1

BR 1 RECEIVER PARTS LIST

Part No.	Parts Per Kit	Description
Resistors		
SW11	2	100 Ohm Resistor
O11	1	10000 Ohm Resistor
BR43	1	25000 Ohm Resistor 2 W
A10	2	47000 Ohm Resistor
O12	1	100000 Ohm Resistor
O18	2	470000 Ohm Resistors
O17	1	1 Megohm Resistor
C10	1	10 Megohm Resistor
T11	1	470 Ohm 1 Watt Resistor
BR26	1	2700 Ohm 2 Watt Resistor
Condensers		
TS33	1	4.7 MMF Fixed Condenser
G24	2	47-50 MMF Fixed Cond.
AR26	2	150 MMF Fixed Cond.
AR27	5	.005 MFD Fixed Cond.
AR28	5	.05 MFD Fixed Cond.
T40	1	10 MFD 25V Electrolytic Cond.
AR29	1	15 + 10 MFD 450V Electrolytic Cond.
AR30	2	3-30 MMF Trimmer Cond.
BR27	1	Dual Tuning Cond.
Coils		
BR13	1	Antenna Primary Coil
BR14	1	Antenna Secondary Coil
BR18	1	Oscillator Coil
BR16	1	IF Trans. (Input)
BR17	1	IF Trans. (Output)
Controls and Switches		
BR23	1	500000 Ohm-6 Control
AR18	1	1 Megohm-6 Control with Sw.
BR28	1	SPDT Rotary Switch
Knobs-Sockets-Terminal Strips		
V48	4	Knobs
AR32	5	Tube Sockets
AR12	1	Speaker Socket
AR13	1	Speaker Plug
A14	1	Phono Socket
A19	1	Phono Plug
C25A	1	Pilot Socket
P13	1	110V Socket
FM17	1	Dual Binding Post
O38	3	Single Terminal Strips

Part No.	Parts Per Kit	Description
Tubes and Lamps		
O66	1	5Y3 Tube
K23	1	12A6 Tube
K24	1	12C8 Tube
BR29	1	12K8 Tube
AR31	1	12SH7 Tube
O39	1	6V Pilot Lamp
Miscellaneous		
BR19	4	Angle brackets
BR22	1	Condenser Mounting Bracket
BR21	1	Dial Drum Assembly
BR30	1	Dial Plate Assembly
FM21	1	Dial Spring
BR31	1	Dial Cable (31")
AR33	1	Pointer
AR21	1	Dial Drive Shaft
AR23	2	Dial Drive E Washers
AR24	1	Drive Shaft Bracket
TS55	1	#8-32 X 1/8" Set Screw
SW43	1	Condenser Mounting Wafer
O31	32	#6-32 X 3/8 Screws
TS74	3	#8-32 X 1/4" Screws
G52	4	#8-32 X 3/8" Screws
O102	3	#6-3/8" Sheet Metal Screws
TC46	7	#6-5/8" Sheet Metal Screws
S22	36	#6-32 Nuts
TP16	4	#8-32 Nuts
O33	3	Control Nuts
TS72	35	#6 Lock Washers
BR36	7	#8 Lock Washers
O101	3	Control Lock Washers
AR35	3	1/8" Spacers
AR36	4	3/8" Spacers
K18	2	Grid Clips
O35	1	3/8" Grommet
C24	1	7/16" Grommet
O37	2	Solder Lugs
BR24	1	Power Transformer
AR34	1	Output Transformer
BR32	1	Chassis
BR35	1	Panel
AR19	1	Line Cord 8'
BR33	1	Shielded Wire (30")
IB43	1	Length Bare Wire (18")
T24	1	Roll Hookup Wire (10")
P24	1	Length of Spaghetti (6")
BR1	1	Instruction Manual

Check the voltages at the tube sockets. A table of approximate voltages is given below. These readings were obtained with a Heathkit VTVM with 11 megohms input resistance. The occasional lower readings in brackets were obtained with a Heathkit Handitester at 1,000 ohms per volt. Variations of plus or minus 15% may be expected.

©John F. Rider

Compliments of www.nucow.com

Compliments of www.nucow.com

MODELS 522, 524, Ch. 138

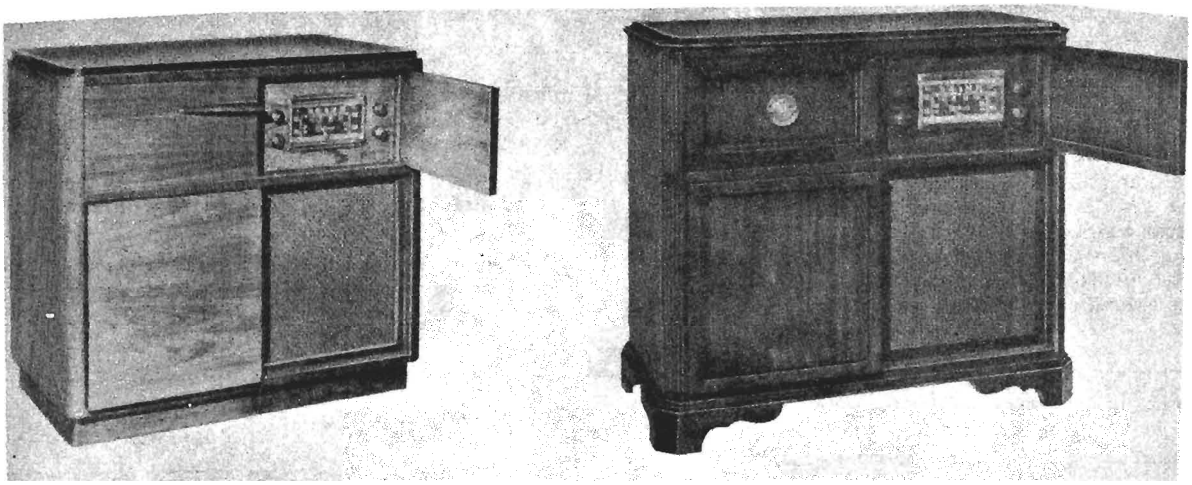

MODEL 522
Modern style cabinet
Blonde oak
Mahogany
Walnut

MODEL 524
Traditional style cabinet
Mahogany finish

SPECIFICATIONS

The Hoffman Models 522 and 524 are 15 tube phonograph combination receivers for reception on the standard broadcast AM and FM radio frequencies. The sound is reproduced by a 12" PM speaker, and has an audio power output of 15 watts.

The record changer will automatically change and play up to twelve 10" records or ten 12" records. An optional record changer is available which will play either the standard 78 rpm records or the Long Playing 33 1/3 rpm records.

Connections are available at the rear of the radio tuner chassis for installation of a separate wire recorder, disc recorder, or 45 rpm record changer.

BLOCK DIAGRAM

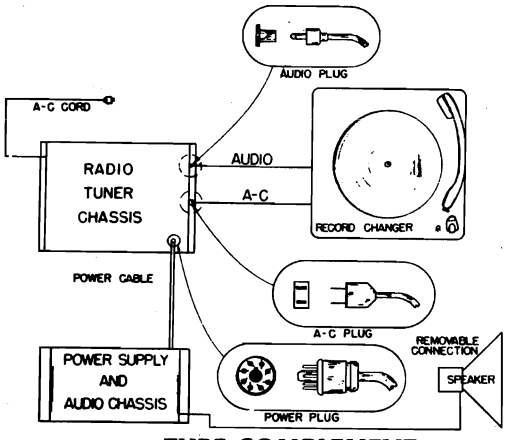

MAJOR COMPONENTS

Radio chassis	138
Cabinet	Model 522, Part No. 7523-1 Model 524, Part No. 7524-1
Speaker	12" PM, Part No. 9015 Voice coil impedance, 3.2 ohms
Record changer	One of the following: Webster Model 148, 78 rpm Webster Model 149, 78 rpm Webster Model 246, 78 and 33 1/3 rpm V-M Corp. Model 400D, 78 and 33 1/3 rpm
Dial Escutcheon	Part No. 8080

ELECTRICAL AND MECHANICAL DATA

Frequency Range .....(AM) 535 KC to 1650 KC
(FM) 88 MC to 108 MC

Intermediate Frequency .....(AM) 455 KC, (FM) 10.7 MC

Power Source.....117 volts AC, 60 cycles, 15 watts

Output Impedance, Audio.....3.2 ohms at 400 cycles

Power Output, Audio.....15 watts

TUBE COMPLEMENT

1	6BA6	AM RF Amplifier
1	6BE6	AM Oscillator—Converter
1	7F8	FM Oscillator—Converter
1	6BA6	AM-FM 1st IF Amplifier
1	6BA6	FM 2nd IF Amplifier
1	6AL5	FM Ratio Detector
1	6AT6	AM 2nd Det., AVC, 1st Audio (AM & FM)
1	6J5	2nd Audio Amplifier
1	6J5	Audio Phase Inverter
4	6K6GT	Audio Power Output
1	5U4G	Power Rectifier
1	6E5	Tuning Indicator

©John F. Rider

Compliments of www.nucow.com

MODELS 522,
524, Ch. 138

ALIGNMENT PROCEDURE

NOTES

1—Before beginning alignment, the pointer must be set at the highest mark on the dial with the tuning condenser fully open.

2—The AM section should be completely aligned before beginning the FM alignment.

3—The set should be allowed to warm up 15 minutes before aligning.

4—An output meter should be connected across the speaker voice coil for AM alignment. Keep the volume control at maximum on AM and use as low a signal input as possible for AM and FM.

5—For AM and FM tracking, bend plates of the variable (RF Section) as required.

6—In FM alignment, care must be taken to set the receiver oscillator frequency 10.7 MC *above* the incoming signal frequency.

7—The dummy antenna for FM alignment is two 150 ohm composition resistors; one in series with each generator lead.

ALIGNMENT CHART

STEP NO.	BAND SWITCH POSI-TION	SIGNAL GENERATOR FREQ.	CONNECTION TO RECEIVER	DUMMY ANTENNA	DIAL SETTING	ADJUST	REMARKS
1	AM	455 KC Mod.	6BE6 Conv. Grid Pin 7	0.1 mfd	1600 KC	T2 Pri., Sec., T4 Pri., Sec.	Tuning gang wide open. Adjust trans. for max. output
2	AM	1600 KC Mod.	Ext. Ant. Clip	0.1 mfd	1600 KC	C10 BC Osc. Trimmer	Adjust for max. output
3	AM	1400 KC Mod.	Ext. Ant. Clip	0.1 mfd	1400 KC	C9, C8 RF Trimmer	Adjust for max. output
4	AM	600 KC Mod.	Ext. Ant. Clip	0.1 mfd	600 KC	T6 Sec.	Adjust for max. output
5	AM	600 KC Mod.	Ext. Ant. Clip	0.1 mfd	600 KC	See Note 5	See Note 5
6	AM	1000 KC Mod.	Ext. Ant. Clip	0.1 mfd	1000 KC	See Note 5	See Note 5
7	FM	10.7 MC CW	FM Ant. Terminals	0.1 mfd	107 MC	T1 Pri., Sec., T3 Pri., Sec. T5 Pri. only	Disconnect C23 at point A. Tune for maximum reading. VTVM from point A to chassis. See Ratio Det. Alignment.
8	FM	10.7 MC CW	FM Ant. Terminals	0.1 mfd	107 MC	T5 Sec.	Reconnect C23 to point A. Tune for zero reading, VTVM from resistor junction to point C. See Ratio Det. Alignment.
9	FM	107 MC CW	FM Ant. Terminals	300 ohms See Note 7	107 MC	C7 FM Osc. Trimmer	Adjust for max. with VTVM from point A to chassis. See Note 6.
10	FM	107 MC CW	FM Ant. Terminals	300 ohms See Note 7	107 MC	C6 FM RF Trimmer	Adjust for max. with VTVM from point A to chassis.
11	FM	98 MC CW	FM Ant. Terminals	300 ohms	98 MC	See Note 5	Adjust for max. with VTVM from point A to chassis.
12	FM	88 MC CW	FM Ant. Terminals	300 ohms	88 MC	See Note 5	Adjust for max. with VTVM from point A to chassis.

RATIO DETECTOR ALIGNMENT

TUNING T5 PRIMARY

(T1 and T3 should be tuned before tuning T5.)

Locate the ratio detector test points A, B, and C on the schematic diagram. Solder two 100,000 ohm composition resistors in series from point "A" to chassis. Connect a VTVM from point "A" to chassis and feed 10.7 MC CW into the FM antenna terminals. Adjust T5 primary (bottom slug) for maximum reading, setting the generator output to give about one volt meter reading. (An insulated aligning tool should be used for this adjustment.) Condenser C23 should be disconnected at point "A" during IF and ratio detector primary adjustments. This prevents any stored charge on C23 from causing a time lag in the VTVM reading, and giving misleading peak indications.

TUNING T5 SECONDARY

Reconnect C23 to point "A." Connect the VTVM probe to point "C" and the VTVM common or ground lead to the junction of the two 100,000 ohm resistors. Tune T5 secondary until the meter reading reverses polarity. Set the slug at this zero point.

CHECKING BAND WIDTH

Connect the signal generator to the grid of the 2nd FM IF tube. Set the generator to 100,000 microvolts at 10.7 MC CW. Shift the generator frequency above and below 10.7 MC and record the frequencies at which the maximum positive and negative meter readings are obtained. The difference between these two readings is the bandwidth of the ratio detector and should be 250 to 300 KC.

Remove the two 100,000 ohm resistors before beginning the FM RF alignment.

©John F. Rider

Compliments of www.nucow.com

MODELS 522, 524, Ch. 138

SOCKET VOLTAGES

Tube	Circuit	1	2	3	4	5	6	7	8	Band Switch
6BA6	AM RF Amp.	−.73*	G	6.2ac	G	232	168	.4	—	AM
6BE6	AM Osc. Conv.	−1.0*	0	G	6.2ac	222	104	−.55*	—	AM
7F8	FM Osc. Conv.	0	G	216	0	3.6	225	6.2ac	0	FM
6BA6	FM-AM IF	−.55*	G	G	6.2ac	217	113	1.0	—	FM-AM
6BA6	FM 2nd IF	0	G	G	6.2ac	212	96	1.1	—	FM-AM
6AL5	Ratio Det.	0	−.2*	G	6.2ac	−.1*	NC	0	—	FM
6AT6	AM Det.-1st AF	0	G	G	6.2ac	−.7*	G	48	—	AM
6J5	2nd AF Amp.	G	6.2ac	70	NC	0	NC	G	2.8	AM
6J5	Phase Invert.	G	6.2ac	140	NC	55	67'	G	70	AM
6K6	Audio Output	NC	6.2ac	290	270	0	NC	G	22	AM
5U4	Rectifier	NC	4.9ac'	NC	320ac	NC	320ac	NC	300	AM
6E5	Tuning Ind.	6.1ac	205*	−9.4*	255	G	G	—	—	FM-AM

All voltages measured to chassis unless otherwise noted.
DC voltages measured with 20,000 ohm/volt meter.
AC voltages measured with 1000 ohm/volt meter.
All measurements made with signal input to receiver.

*—Measured with VTVM.
G—Terminal grounded to chassis.
'—Tie point for R2-R3.
'—Measured from pin 2 to 8.

TUBE AND TRIMMER CONDENSER LOCATIONS

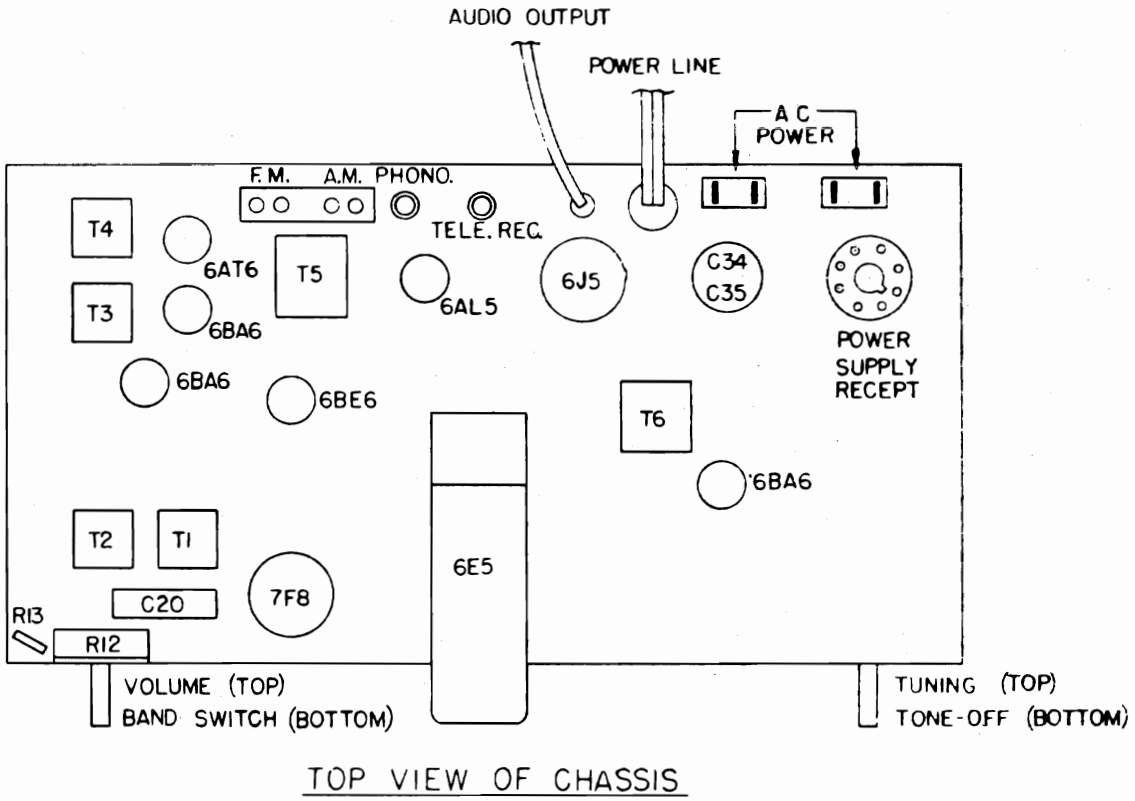

Tube Locations—Top View of Tuner Section

©John F. Rider

Compliments of www.nucow.com

MODELS 522,
524, Ch. 138

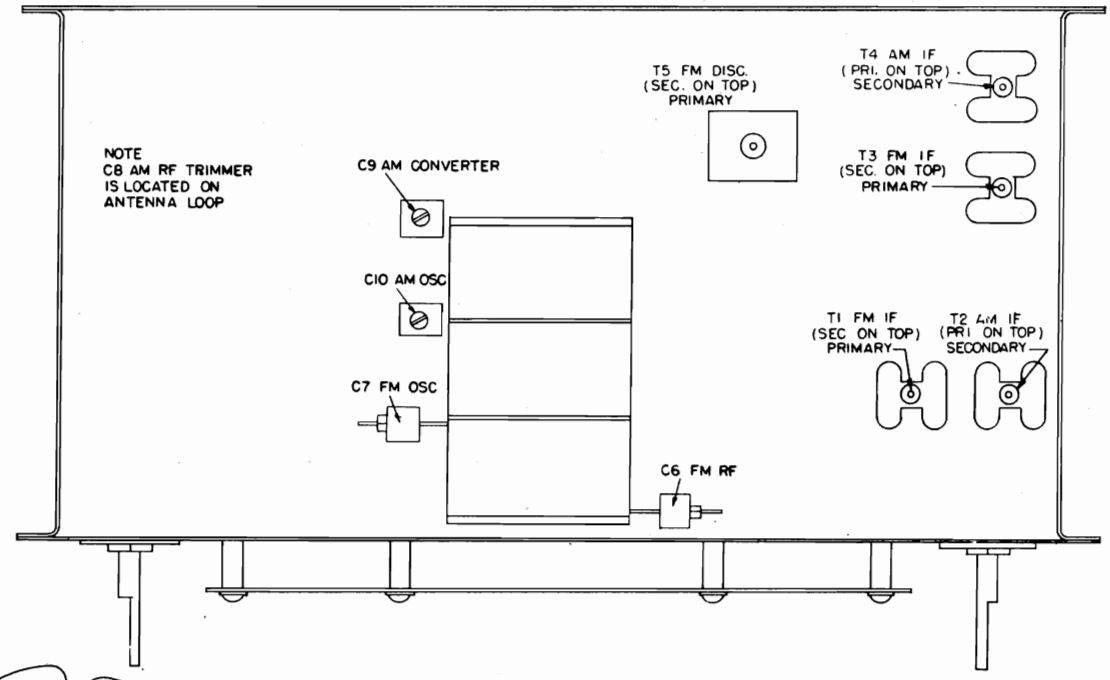

Trimmer Condenser Location—Bottom View of Tuner Section

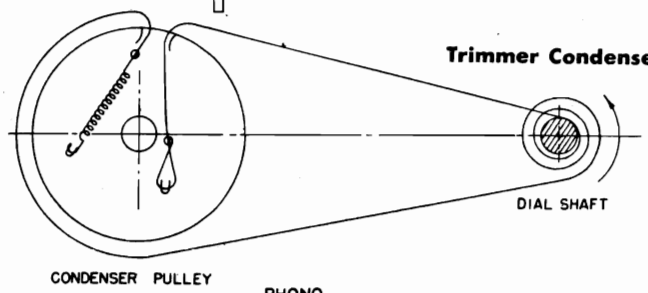

Dial Stringing

PARTS LAYOUT

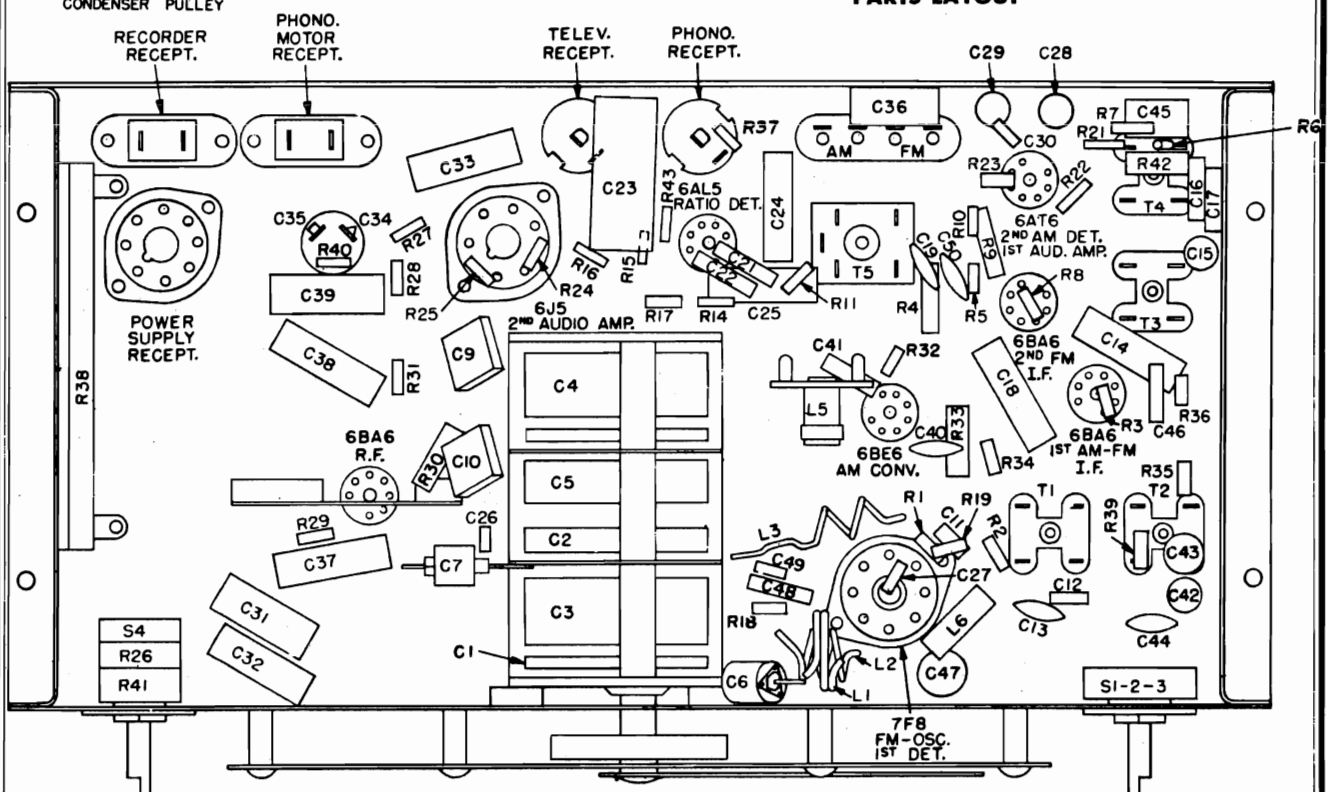

Bottom View of Tuner Section

©John F. Rider

Compliments of www.nucow.com

MODELS 522, 524, Ch. 138

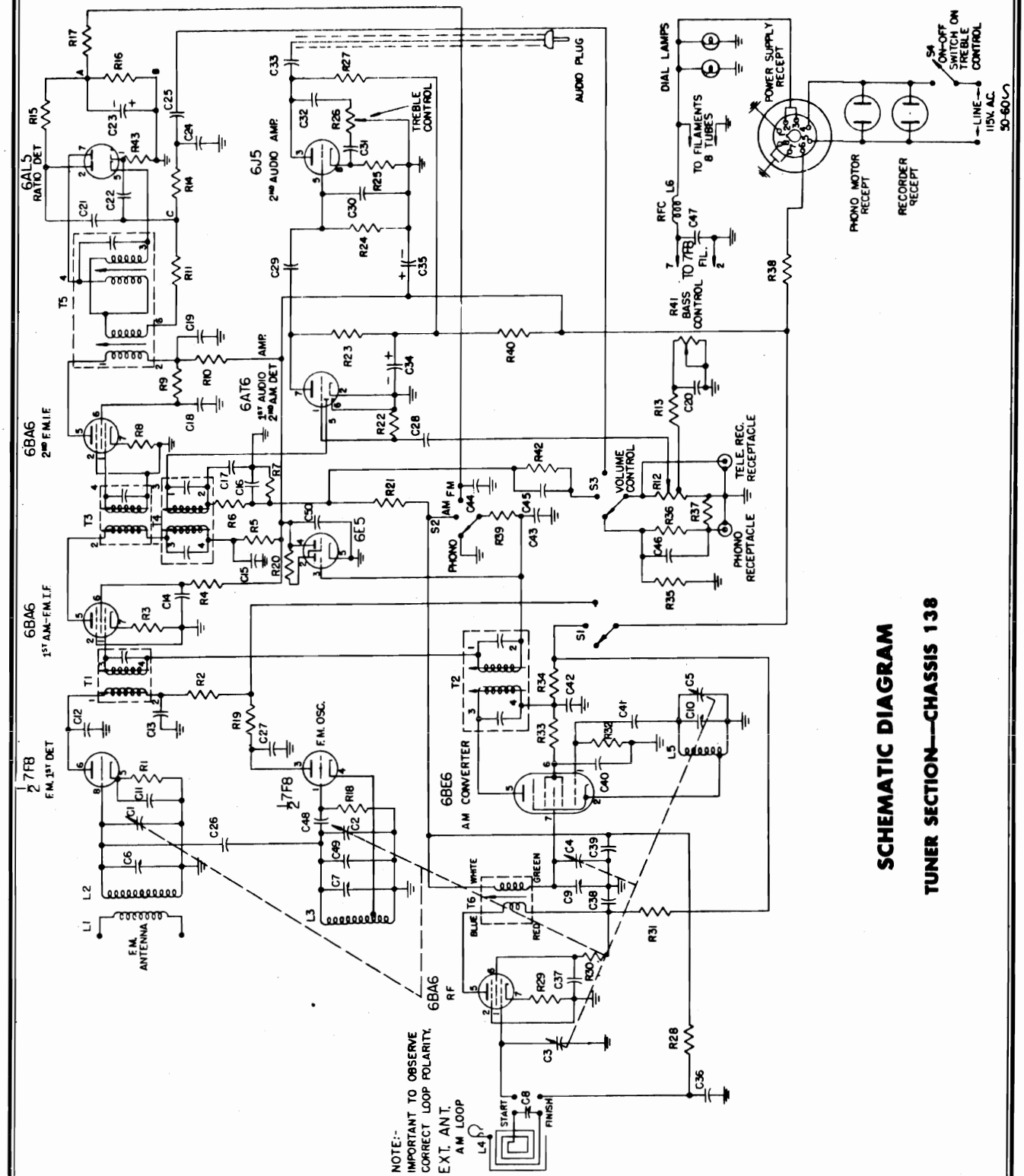

SCHEMATIC DIAGRAM

TUNER SECTION—CHASSIS 138

©John F. Rider

Compliments of www.nucow.com

MODELS 522,
524, Ch. 138

POWER SUPPLY AND AUDIO SECTION

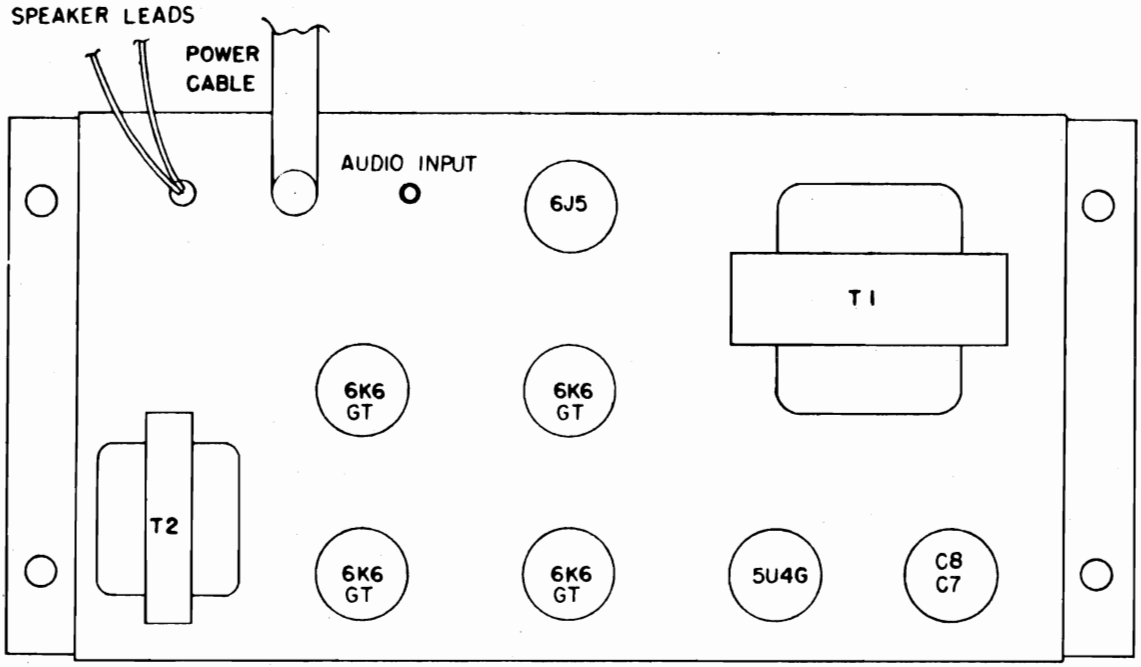

Tube Locations—Top View of Chassis

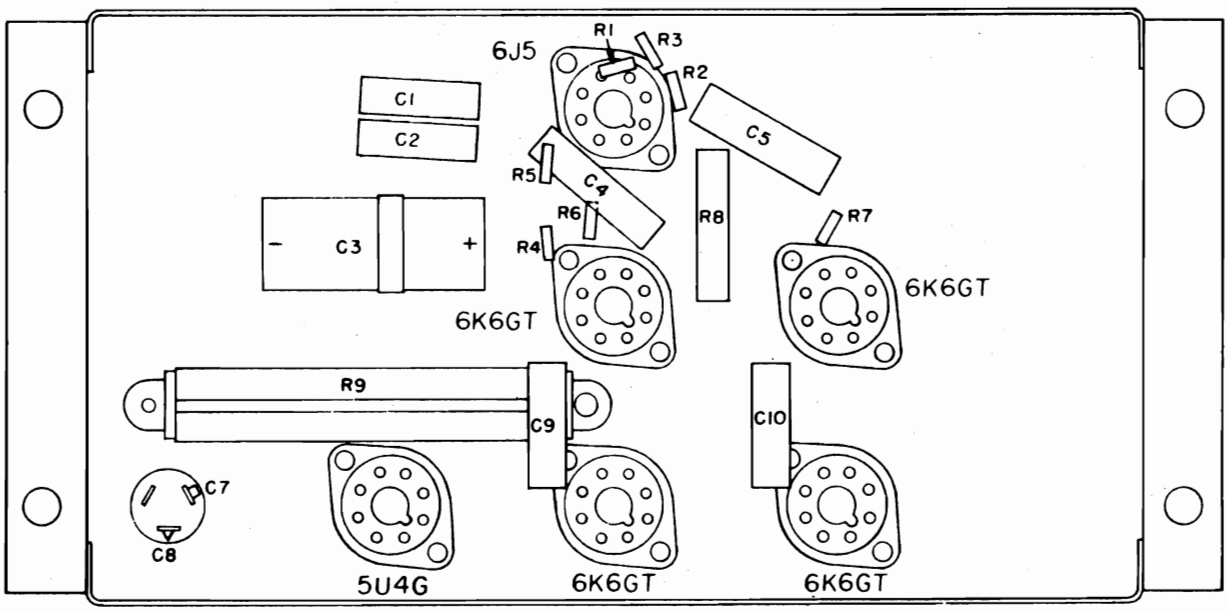

Parts Layout—Bottom View of Chassis

©John F. Rider

Compliments of www.nucow.com

MODELS 522, 524, Ch. 138

SCHEMATIC DIAGRAM

POWER SUPPLY AND AUDIO SECTION—CHASSIS 138

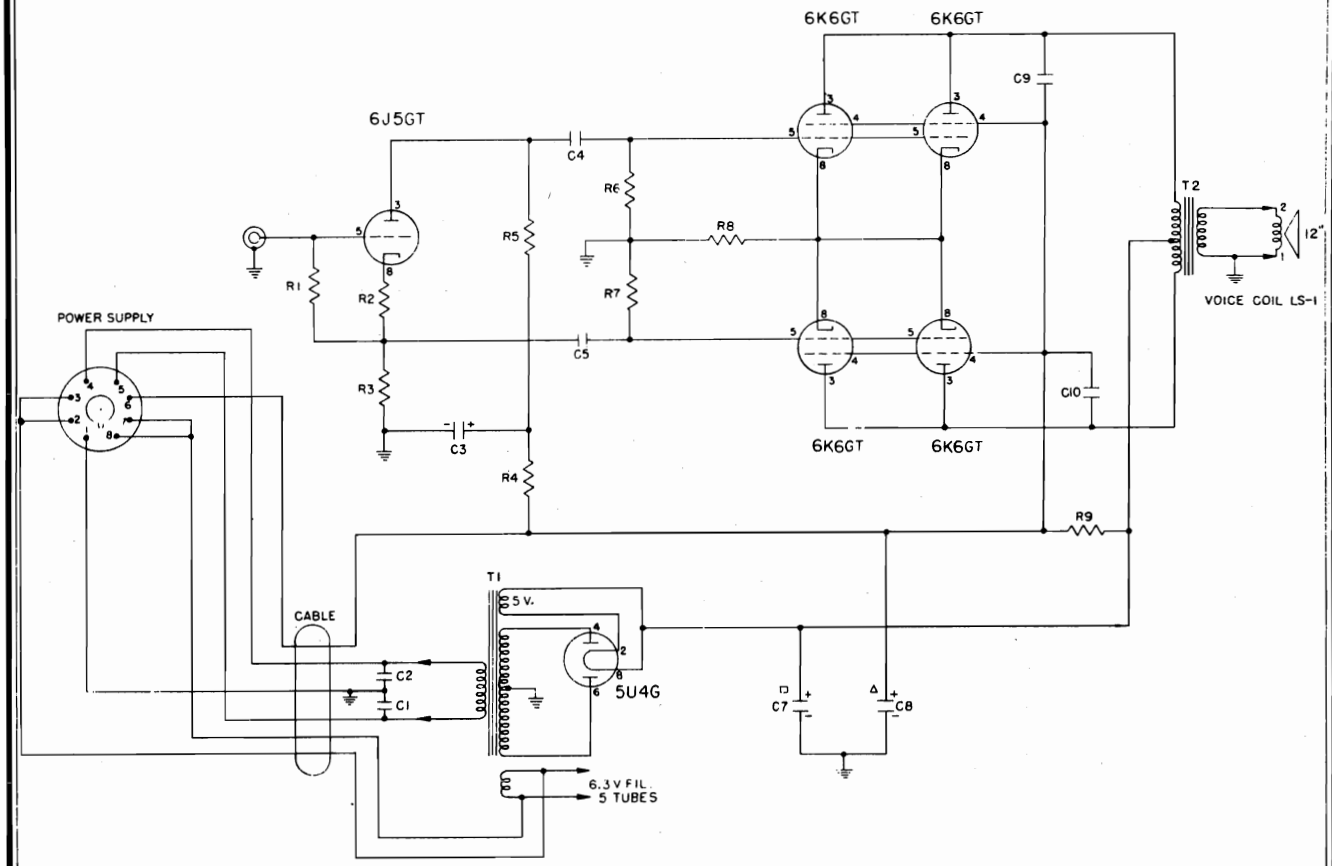

PARTS LIST—POWER SUPPLY AND AUDIO SECTION

Symbol	*Description*			*Hoffman Number*
C1, C2	.01 Mfd.	600V	Paper	4103
C3	10 Mfd.	450V Tub.	Electro	4203
C4, C5	.05	400V	Paper	4101
C6, C7, C8	20/45V, 20/450V, 20/450V		Electro	4200
C9, C10	.001	600 V	Paper	4104
R1	1 Meg.	20%	½ Watt	4513
R2	2200 Ohms	20%	½ Watt	4512
R3, R5	47000 Ohms	10%	½ Watt	4559
R4	10000 Ohms	20%	½ Watt	4515
R6, R7	.22 Meg.	20%	½ Watt	4500
R8	220 Ohms	20%	3 Watt	4706
R9	1500 Ohms	5%	6½ Watt	4701
LS1	Loudspeaker 12" P.M.			9044
T1	Power Transformer			5001
T2	Output Transformer			5108

©John F. Rider

Compliments of www.nucow.com

MODELS 522,
524, Ch. 138

RADIO TUNER SECTION PARTS LIST

Symbol	Description			Hoffman Part No.
C1, C2, C3, C4, C5	3 Gang AM, FM (1 Section unused)			4411
C6, C7	Trimmers (FM Section)			4318
C8, C9, C10	Trimmers (AM Section)			4313
C11, C27	1000 Mmf		Ceramic Hi-K	4025
C12	10 Mmf	±10%	Ceramic	4027
C13, C19, C40, C44, C47, C50	5000 Mmf		Ceramic Hi-K	4029
C14, C15, C18, C25, C28, C33, C37, C38, C42	.01 Mfd	400V	Paper	4112
C16, C17, C21, C22	270 Mmf	±20%	Mica	4001
C20	.02 Mfd	400V	Paper	4106
C23	5 Mfd	50V	Electrolytic	4209
C24	.002 Mfd	600V	Paper	4118
C29, C32	.005 Mfd	600V	Paper	4102
C30	470 Mmf	±20%	Mica	4003
C31, C36, C39, C43	.05 Mfd	200V	Paper	4100
C34, C35	20-20 Mfd	450V	Electrolytic	4200
C41, C45	100 Mmf	±20%	Mica	4000
C46, C48	22 Mmf	±10%	N150 Ceramic	4021
C49	5 Mmf	±10%	N750 Ceramic	4028
R1	1,200 Ohm	±20%	½W	4553
R2, R5, R10, R19, R31, R34	1,500 Ohm	±20%	½W	4534
R4, R9, R30	33,000 Ohm	±20%	1W	4556
R6, R14, R40	47,000 Ohm	±20%	½W	4504
R7	.68 Meg	±20%	½W	4555
R11	120 Ohm	±10%	½W	4546
R12	.5 Meg	Vol. Control, tapped		4814
R13	6800 Ohm	±10%	½W	4557
R15, R43	560 Ohm	±10%	½W	4507
R16	15,000 Ohm	±20%	½W	4521
R17, R28, R35, R39	.22 Meg	±20%	½W	4500
R18, R32	22,000 Ohm	±20%	½W	4501
R20, R42	1 Meg	±20%	½W	4513
R21, R22	2.2 Meg	±20%	½W	4502
R23, R24	.47 Meg	±20%	½W	4506
R25	2,700 Ohm	±10%	½W	4519
R26, R41	.5 Meg	Dual Bass & Treble Controls		4813
R27	100,000 Ohm	±20%	½W	4511
R33	15,000 Ohm	±20%	1W	4539
R36, R37	4.7 Meg	±20%	½W	4544
R38	500 Ohm	±10%	5W	4700
L1	FM Antenna Primary			5258
L2	FM Antenna Secondary			5248
L3	FM Oscillator Coil			5247
L4	AM Loop Antenna			5279
L5	AM Oscillator Coil			5282
L6	RFC Filament Choke			5266
T1	FM 1st IF Transformer			5284
T2	AM 1st IF Transformer			5286
T3	FM 2nd IF Transformer			5285
T4	AM 2nd IF Transformer			5287
T5	FM Discriminator (Ratio Detector)			5288
T6	AM RF Interstage Transformer			5289
S1, S2, S3	Band Change Switch (3 Pole - 3 Position Rotary)			6002
S4	Power Switch on Bass & Treble Control (Part of 4813)			
	Knob, Dual (Bass-Treble) (Specify Color)			3584
	Knob, Single (Specify Color)			3583
	Plug, Audio Output (Single prong)			6203
	Plug, Power Supply			6212
	Pointer, Dial			518
	Receptacle, Phono			6121
	Receptacle, Power Outlet			6108
	Socket, Loctal			6105
	Socket, Miniature			6118
	Socket, Octal			6103
	Socket, Pilot Lamp			6110
	Spring, Dial			9507
	Strip, Antenna Terminal			424
	Tuning Dial Backplate			2217

©John F. Rider

Compliments of www.nucow.com

MODEL 100

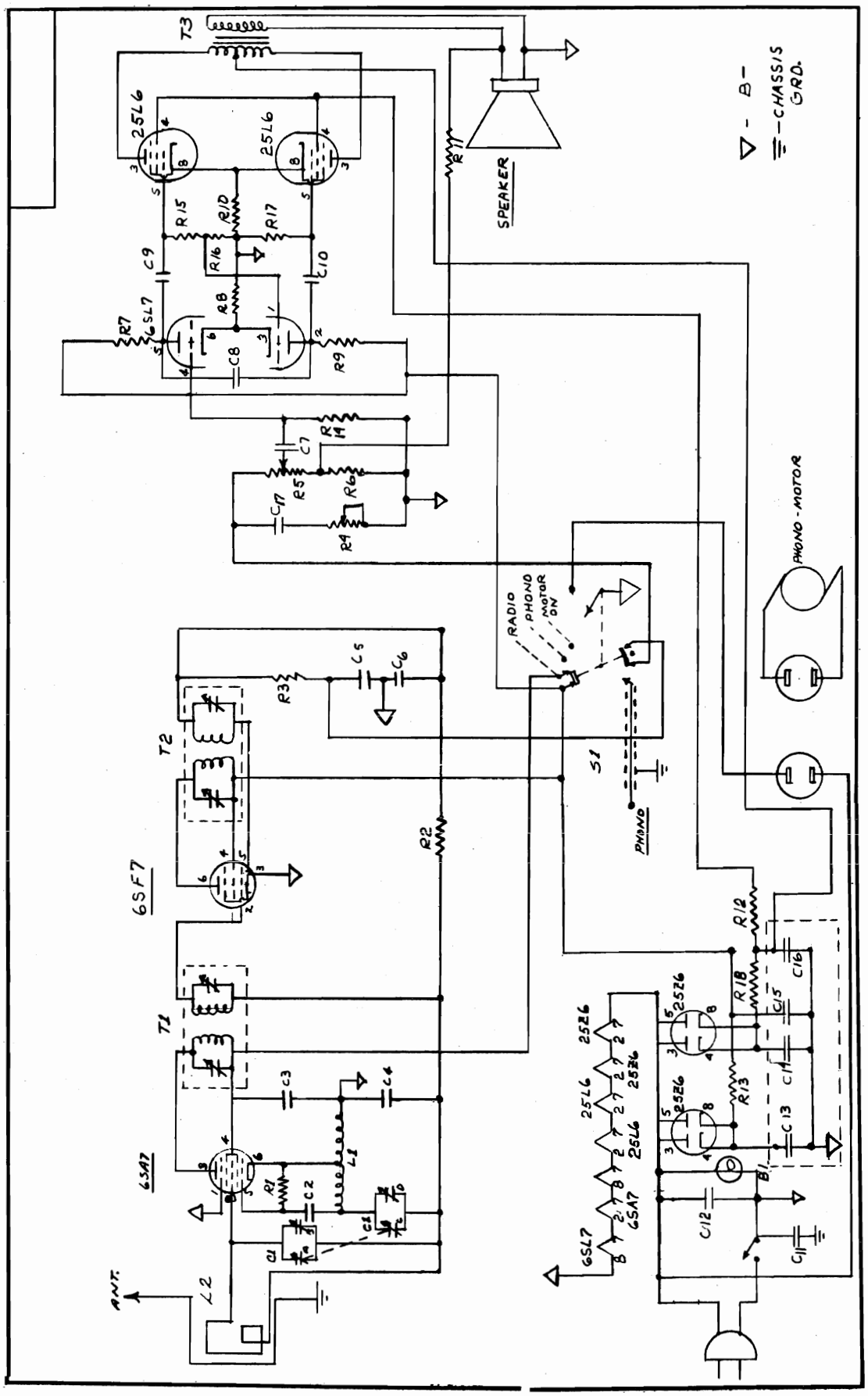

©John F. Rider

Compliments of www.nucow.com

MODEL 150

HOW TO OPERATE THE RADIO:

This radio is equipped with four controls, the left hand control is the combined off-on switch and volume control. The second knob from the left is the phono-radio switch, the third knob is the tone control, the fourth control is used for tuning the desired station. To place the set in operation, rotate on-off volume control knob to right and allow 30 seconds for set to warm up. Rotate tuning control to desired station. Adjust volume control to desired volume, set tone control to treble or base response. To use phonograph follow above steps, except turn phono-radio switch, to phono position. Place records on changer in sequence desired, push reject button, and allow changer to cycle.

ALIGNMENT PROCEDURE

Feed a 455 K.C. modulated signal from grid to ground (pin #7 12 BE6). Connect A output meter across the voice coil. Tune trimmers on first and second IF transformers for maximum indication on meter. Set signal generator to 1600 K.C. Modulated signal and couple loosely to loop antenna. Set dial to 1600 K.C. and tune oscillator trimmer for maximum indication on meter.

Set signal generator and dial to 1400 K.C. and tune R.F. trimmer, for maximum indication on meter. Check tracking at 600 K.C., knife gang if necessary. Repeat these adjustments until the receiver tracks correctly

PIN	#1	#2	#3	#4	#5	#6	#7
12BE6	-7.3	0	24*	24*	78	78	0
12BA6	-8.	0	24*	12*	89	89	0
12AT6	-1.8	0	0	8.*	-8.	-2.3	34
12AT6	-.45	0	0	12*	0	0	45
50C5	-7.2	0	60*	12*	0	89	120
50C5	-7.2	0	80*	36*	0	89	120
35W4	-0	0	86*	120*	115*	115*	120

Measured with V.T V M from

Pin to B- line.

Set in radio position.

* A.C. Volts

©John F. Rider

Compliments of www.nucow.com

MODEL 150

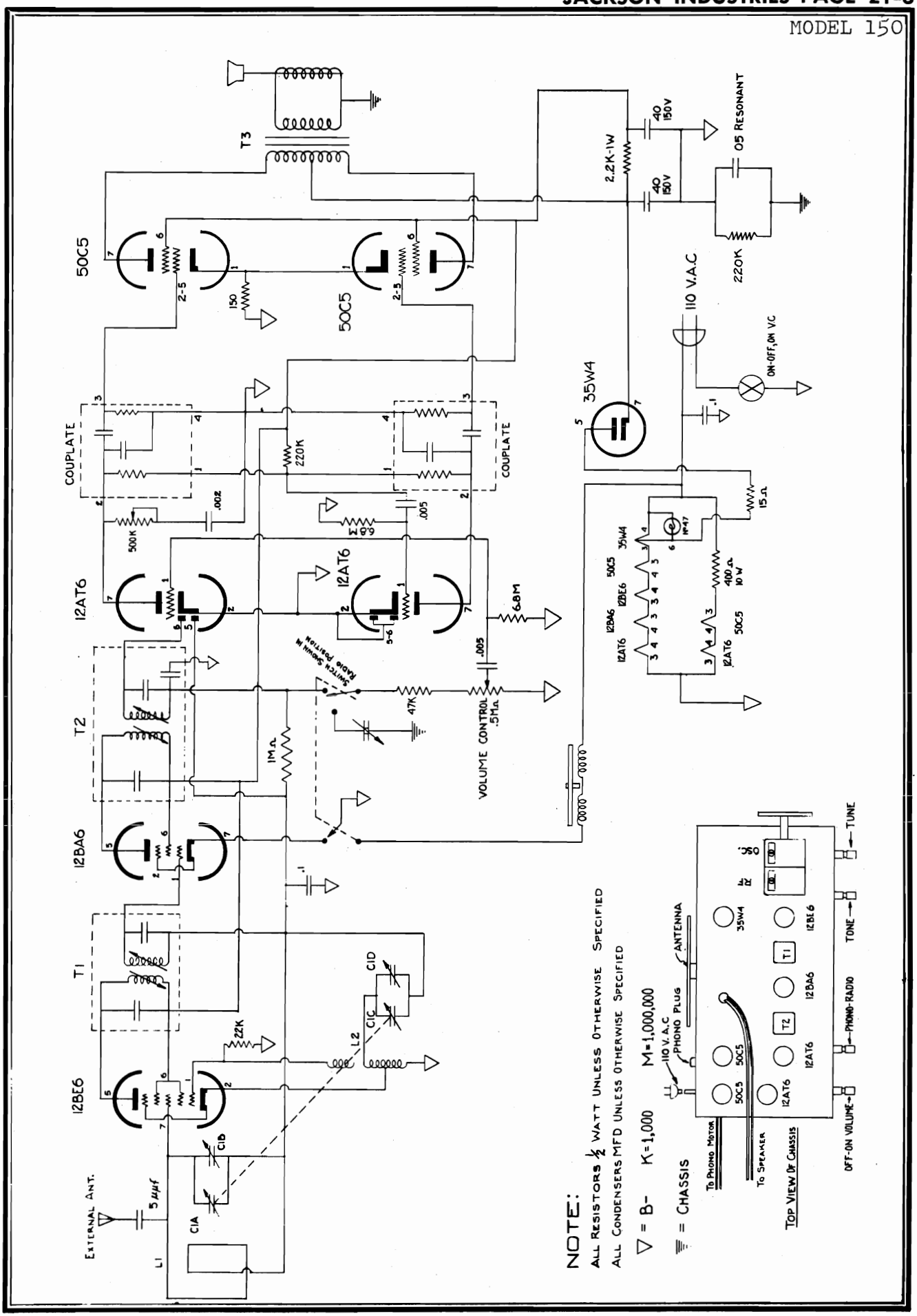

©John F. Rider

Compliments of www.nucow.com

MODELS 152,
153, 316

SPECIFICATIONS

Power Supply	105-125 volts 60 cycle AC only.
Power Consumption	65 Watts.
Frequency Range FM	88 to 108 MC.
Frequency Range AM	540 to 1600 KC.
I.F. Frequency FM	10.7 MC.
I.F. Frequency AM	455 KC.
Band width, FM, Ratio Detector	330 KC.
Band width, FM, 1st I.F.	280 KC.
Band width, FM, Converter	220 KC.

The tubes used are as follows:

12AT7	FM RF Amplifier, Converter
6BE6	FM Osc, Am Osc, Converter
6BA6	FM-AM, 1st I.F. Amplifier
6BA6	FM, 2nd I.F. Amplifier
6AL5	FM Detector
6AT6	AM Detector, AVC, Audio
6AQ5	Power Output
6X4	Power Rectifier
No. 44	Pilot Lights (2)

SERVICE NOTES

GENERAL

CAUTION: If realignment is necessary be sure the proper test equipment is available, as listed below, before proceeding with the alignment procedure as given on page 5.

Due to the high frequencies at which FM signals are received the service man must use great care when servicing these sets. Extreme caution must be used regarding the moving of component parts in the R.F. and oscillator circuits of the receiver as those circuits can be detuned in this manner.

If it becomes necessary to replace components such as resistors and condensers they must be replaced with parts of the same size, type, voltage rating and tolerance as called for in the parts list.

When installing new parts they should be placed in the same position as the original, and the leads should be cut to the same length.

ALIGNMENT NOTES

This receiver has been thoroughly inspected and tested at the factory, using the most modern test equipment available, such as FM sweep generators and oscilloscopes. All R.F. and I.F. circuits have been accurately adjusted at the factory and no attempt should be made to realign these circuits unless it is absolutely necessary.

EQUIPMENT USED FOR ALIGNMENT

Vacuum tube voltmeter.
AM Signal generator
FM Sweep generator.
Oscilloscope.
Insulated screw driver.
Dummy antenna:
- .1 MFD condenser
- .00025 MFD mica condenser
- 150 ohm resistor (2)

Output meter.

All voltage readings are taken from tube pin to chassis.

All measurements are made with no signal, using a 20,000 ohm per volt meter.

AC input voltage must be maintained at 117 volts for accurate readings.

AC voltages shown are at 1000 ohms per volt.

All voltages shown are approximate.

VOLTAGE CHART

	PIN 1	PIN 2	PIN 3	PIN 4	PIN 5	PIN 6	PIN 7	PIN 8	PIN 9
6BE6 FM & AM OSC AM CONV	0	0	0	6 AC	155	125	0		
12AT7 FM RF AMP & CONV	170	0	1.5	0	0	155	0	1	6 AC
6BA6 1st IF AM & FM	0	0	6 AC	0 AC	150	100	0		
6BA6 2nd IF FM	0	0	6 AC	0 AC	155	110	1		
6AL5 FM DETECTOR	0	0	6 AC	0 AC		0	0		
6AT6 AM DETECTOR, AVC, AUDIO	—.5	0	6 AC	0 AC	0	0	60		
6AQ5 POWER OUTPUT	0	7.5	6 AC	0 AC	215	170	0		
6x4 POWER RECTIFIER	230 AC		6 AC	0 AC	235	230 AC	235		

Band Switch on AM position. Dial 1600 KC. No Signal.

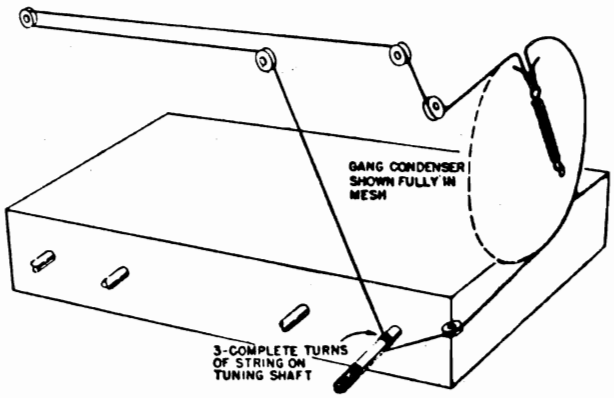

FIG. 4 DIAL CORD STRINGING

©John F. Rider

Compliments of www.nucow.com

MODELS 152, 153, 316

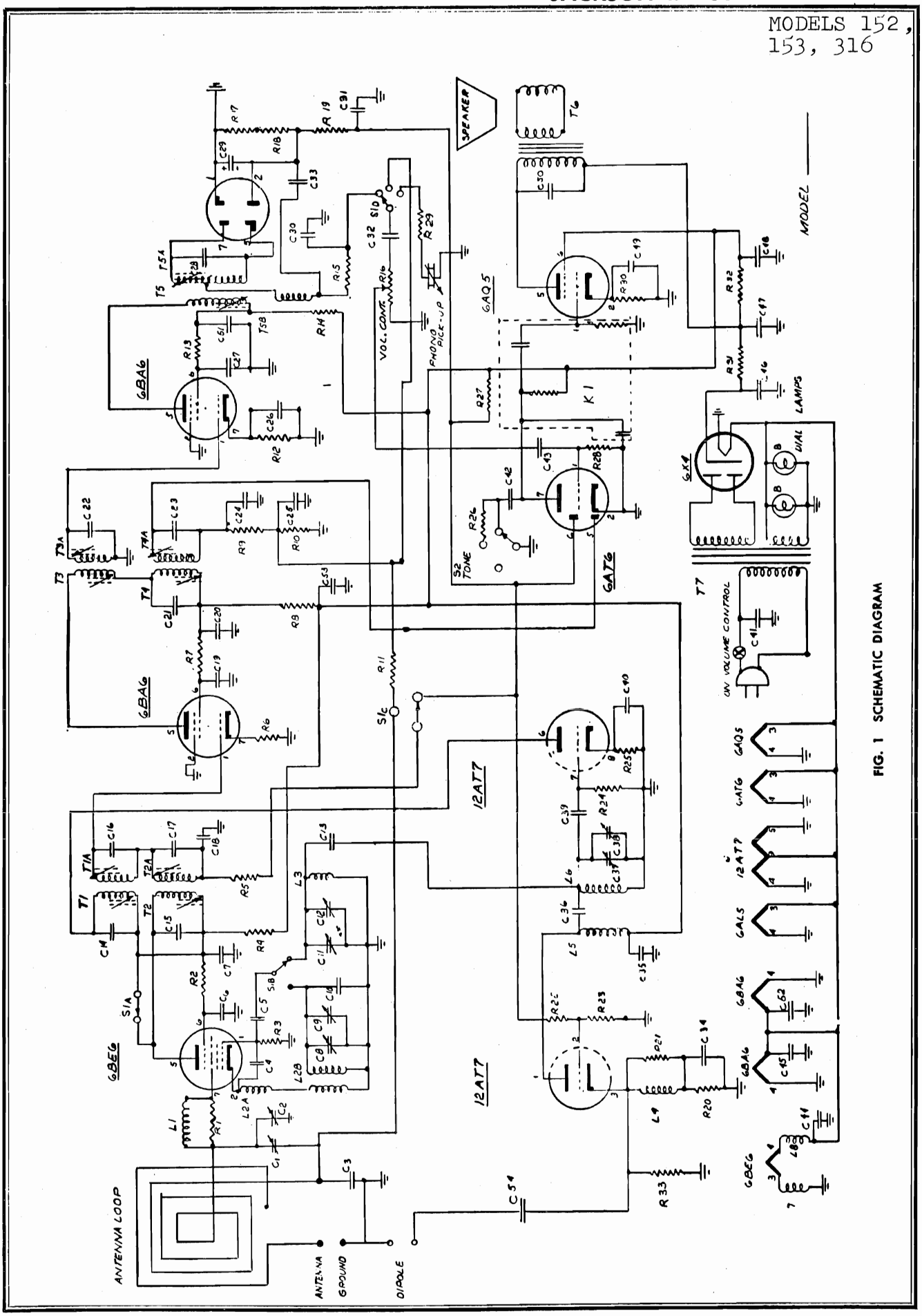

FIG. 1 SCHEMATIC DIAGRAM

©John F. Rider

Compliments of www.nucow.com

NOTE A: When aligning the FM I.F. circuits, keep the out put from the signal generator as low as possible.

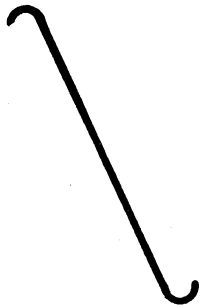

FIGURE 2

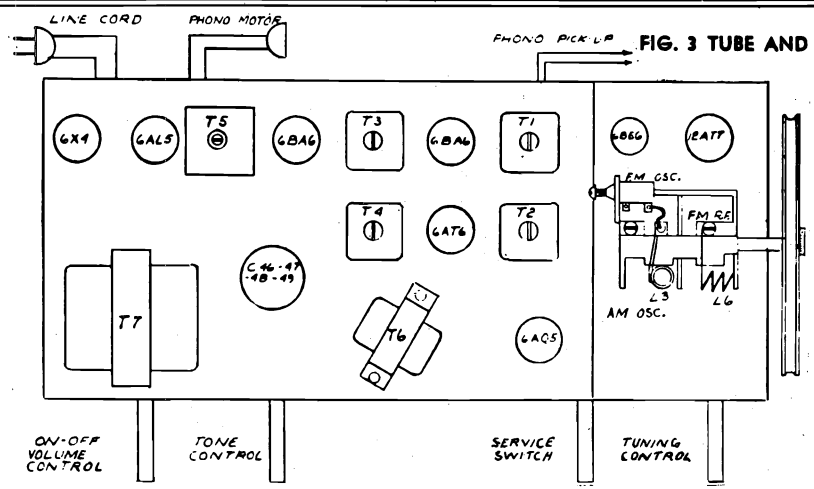

FIG. 3 TUBE AND TRIMMER LOCATIONS

ALIGNMENT PROCEDURE

STEPS	RECEIVER DIAL SETTING	BAND SWITCH POSITION	SIGNAL GENERATOR FREQUENCY	DUMMY ANTENNA	SIGNAL GENERATOR CONNECTIONS	OUTPUT INDICATOR	TRIMMER ADJUSTMENT	TRIMMER FUNCTION	REMARKS
1	Minimum capacity	AM	455 KC 400 cycle AM	.1 MFD	High side—grid of AM converter tube (6BE6) Low side—chassis	Output Meter across voice coil	T2 & T4	AM I.F.	Adjust for maximum output
2	"	"	1600 KC 400 cycle AM	"	"	"	AM OSC	AM Oscillator	"
3	1400 KC	"	1400 KC 400 cycle AM	.00025 MFD	High side—One ant. terminal Low side—Other ant. terminal	"	Ant Loop	AM Antenna	"
4	Any position where there is no station interference.	FM	10.7 MC unmodulated .1 volt output.	.1 MFD	High side—grid of 2nd I.F. amplifier tube (6BA6) Low side—chassis	Connect V.T.V.M. to plate of Ratio Detector tube, pin 2 (6AL5)	Top T5	Ratio detector primary	Adjust for maximum negative voltage.
5	"	"	10.7 MC 400 cycle 250 KC Deviation	"	"	Connect scope to audio take-off point (across vol. cont.)	Bottom T5	Ratio detector secondary	Adjust for a balanced pattern on scope. See Fig. 2
6	"	"	10.7 MC 400 cycle 80 KC Deviation	"	High side—grid of 1st I.F. amplifier tube (6BA6) Low side—chassis	"	T3	FM 2nd I.F.	Adjust for maximum gain and best pattern on scope. See Fig. 2
7	"	"	"	"	High side—grid (pin 7) of FM converter tube (12AT7) Low side—chassis	"	T1	FM 1st I.F.	"
8	108.5 MC	"	108.5 MC 400 cycle 30% modulation (22.5 KC deviation)	300 ohms in high side	High side—ant. terminal Low side—chassis	Connect output meter across voice coil	FM OSC.	FM oscillator	Adjust for maximum output
9	105 MC	"	105 MC 400 cycle 30% modulation (22.5 KC deviation)	"	"	"	FM RF	FM R.F.	"

©John F. Rider

Compliments of www.nucow.com

MODELS 152, 153, 316

PARTS LIST

Schematic Diagram Reference	Description
C1	Loop Trimmer
C2	Variable Cond.
C8, C9 C11, C37 C38	.05-200V Condenser
C3	
C4	2.2 MMF Gimmick Cond.
C5	33 MMF (Erie Style A N14004)
C6, 18 C19, 27 C26 C42, C45, 51 C50, C52	5000 MMFD GMV
C10	15 MMFD + or − 10% O° T.C. (Erie)
C12	FM Osc Trimmer
C13	1.5 MMFD (Erie Style "A")
C14, 15, 16, 17 21, 22, 23, 24, 28	Integral part of respective IF—XFMRS
C31, 32, 53, 7, 20	10,000 MMFD GMV
C25 36, 39, 54	100 MMF ceramic cond.
C29	4 - 50V Lytic condenser
C30	2000 MMFD Condenser
C33	470 MMFD Condenser
C34, 35 40, 44, 53	1000 MMFD GMV condenser
C41	.1 - 400V condenser
C43	.01 - 200V condenser
C46, 47 48, 49	40-350V, 30-300V FP Lytic Condenser 30-300V, 10-25V
R2	4.7K ohm Resistor
R3, R15	22K ohm Resistor
R4, R8, R14	1K ohm Resistor
R5, R19	100K ohm Resistor
R6, R12	68 ohm Resistor
R7, R13	10K ohm Resistor
R9, R26	47K ohm Resistor
R10, R23, R24	470K ohm Resistor
R11, R22	2.2M ohm Resistor
R16	.5M Vol. Cont. — SPST
R17, R18	12K Resistor
R20	220 ohm Resistor
R25	2.2K ohm
R27	3.3M ohm
R28	6.8M ohm
R30	270 ohm — 1 Watt
R31	100 ohm — 1 Watt
R32	1000 ohm — 5 Watt
R33	560 ohm
K1	CRL Triode couplate
L1	AM Grid Choke on R1
L2A, B	AM Osc. Coil
L3	FM Osc. Coil
L4	FM Cathode choke on R21
L5	FM plate choke
L6	FM RF Coil
D-1	Dial Scale
L7, 8	Filament choke
T1	1st FM IF
T2	1st AM IF
T3	2nd FM IF
T4	2nd AM IF
T5	Ratio Detector
T6	Out Put XFMR
T7	Power XFMR
	Loop Ant.
B	No. 44 Pilot Light
	Line cord
	300 ohm Line Di-Pole Ant.

K=1000
M=1,000,000
All Resistors ½ Watt unless otherwise noted.

Values of Capacitors in MFD. unless otherwise stated.
Tolerance on Capacitors and Resistors + or − 20% unless otherwise stated.

©John F. Rider

Compliments of www.nucow.com

MODELS 200,
300, 1250

SPECIFICATIONS

Power Supply.....105-125 volts 60 cycle AC only.
Power Consumption.....65 Watts.
Frequency Range FM.....88 to 108 MC.
Frequency Range AM.....540 to 1600 KC.
I.F. Frequency FM.....10.7 MC.
I.F. Frequency AM.....455 KC.
Band width, FM, Ratio Detector.....330 KC.
Band width, FM, 1st I.F.....280 KC.
Band width, FM, Converter.....220 KC.

The tubes used are as follows:

12AT7	FM RF Amplifier, Converter
6BE6	FM Osc, Am Osc, Converter
6BA6	FM-AM, 1st I.F. Amplifier
6BA6	FM, 2nd I.F. Amplifier
6AL5	FM Detector
6AT6	AM Detector, AVC, Audio
6AQ5	Power Output
6X4	Power Rectifier
No. 44	Pilot Lights (2)

SERVICE NOTES

GENERAL

CAUTION: If realignment is necessary be sure the proper test equipment is available, as listed below, before proceeding with the alignment procedure as given on page 5.

Due to the high frequencies at which FM signals are received the service man must use great care when servicing these sets. Extreme caution must be used regarding the moving of component parts in the R.F. and oscillator circuits of the receiver as those circuits can be detuned in this manner.

If it becomes necessary to replace components such as resistors and condensers they must be replaced with parts of the same size, type, voltage rating and tolerance as called for in the parts list.

When installing new parts they should be placed in the same position as the original, and the leads should be cut to the same length.

ALIGNMENT NOTES

This receiver has been thoroughly inspected and tested at the factory, using the most modern test equipment available, such as FM sweep generators and oscilloscopes. All R.F. and I.F. circuits have been accurately adjusted at the factory and no attempt should be made to realign these circuits unless it is absolutely necessary.

EQUIPMENT USED FOR ALIGNMENT

Vacuum tube voltmeter.
AM Signal generator
FM Sweep generator.
Oscilloscope.
Insulated screw driver.
Dummy antenna:
- .1 MFD condenser
- .00025 MFD mica condenser
- 150 ohm resistor (2)

Output meter.

VOLTAGE CHART

	PIN 1	PIN 2	PIN 3	PIN 4	PIN 5	PIN 6	PIN 7	PIN 8	PIN 9
6BE6 FM & AM OSC AM CONV	0	0	0	6 AC	155	125	0		
12AT7 FM RF AMP & CONV	170	0	1.5	0	0	155	0	1	6 AC
6BA6 1st IF AM & FM	0	0	6 AC	0 AC	150	100	0		
6BA6 2nd IF FM	0	0	6 AC	0 AC	155	110	1		
6AL5 FM DETECTOR	0	0	6 AC	0 AC		0	0		
6AT6 AM DETECTOR, AVC, AUDIO	—.5	0	6 AC	0 AC	0	0	60		
6AQ5 POWER OUTPUT	0	7.5	6 AC	0 AC	215	170	0		
6x4 POWER RECTIFIER	220 AC		6 AC	0 AC	235	230 AC	235		

Band Switch on AM position. Dial 1600 KC. No Signal.

All voltage readings are taken from tube pin to chassis.

All measurements are made with no signal, using a 20,000 ohm per volt meter.

AC input voltage must be maintained at 117 volts for accurate readings.

AC voltages shown are at 1000 ohms per volt.

All voltages shown are approximate.

©John F. Rider

Compliments of www.nucow.com

MODELS 200, 300, 1250

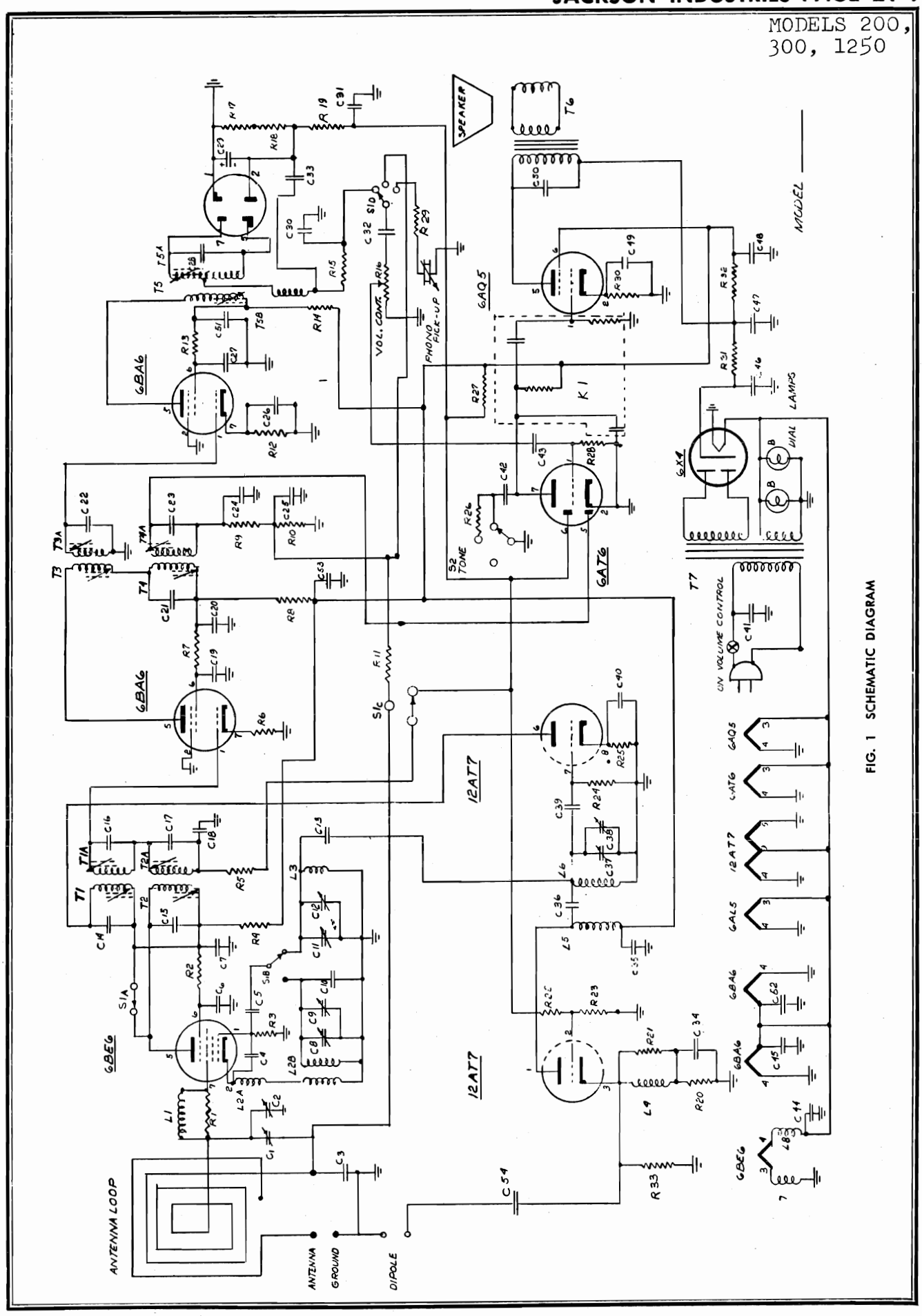

FIG. 1 SCHEMATIC DIAGRAM

©John F. Rider

Compliments of www.nucow.com

ALIGNMENT PROCEDURE

STEPS	RECEIVER DIAL SETTING	BAND SWITCH POSITION	SIGNAL GENERATOR FREQUENCY	DUMMY ANTENNA	SIGNAL GENERATOR CONNECTIONS	OUTPUT INDICATOR	TRIMMER ADJUSTMENT	TRIMMER FUNCTION	REMARKS
1	Minimum capacity	AM	455 KC 400 cycle AM	.1 MFD	High side—grid of AM converter tube (6BE6) Low side—chassis	Output Meter across voice coil	T2 & T4	AM I.F.	Adjust for maximum output
2	"	"	1600 KC 400 cycle AM	"	"	"	AM OSC	AM Oscillator	"
3	1400 KC	"	1400 KC 400 cycle AM	.00025 MFD	High side—One ant. terminal Low side—Other ant. terminal	"	Ant Loop	AM Antenna	"
4	Any position where there is no station interference.	FM	10.7 MC unmodulated .1 volt output.	.1 MFD	High side—grid of 2nd I.F. amplifier tube (6BA6) Low side—chassis	Connect V.T.V.M. to plate of Ratio Detector tube, pin 2 (6AL5)	Top T5	Ratio detector primary	Adjust for maximum negative voltage,
5	"	"	10.7 MC 400 cycle 250 KC Deviation	"	"	Connect scope to audio take-off point (across vol. cont.)	Bottom T5	Ratio detector secondary	Adjust for a balanced pattern on scope. See Fig. 2
6	"	"	10.7 MC 400 cycle 80 KC Deviation	"	High side—grid of 1st I.F. amplifier tube (6BA6) Low side—chassis	"	T3	FM 2nd I.F.	Adjust for maximum gain and best pattern on scope. See Fig. 2
7	"	"	"	"	High side—grid (pin 7) of FM converter tube (12AT7) Low side—chassis	"	T1	FM 1st I.F.	"
8	108.5 MC	"	108.5 MC 400 cycle 30% modulation (22.5 KC deviation)	300 ohms in high side	High side—ant. terminal Low side—chassis	Connect output meter across voice coil	FM OSC.	FM oscillator	Adjust for maximum output
9	105 MC	"	105 MC 400 cycle 30% modulation (22.5 KC deviation)	"	"	"	FM RF	FM R.F.	"

NOTE A: When aligning the FM I.F. circuits, keep the out put from the signal generator as low as possible.

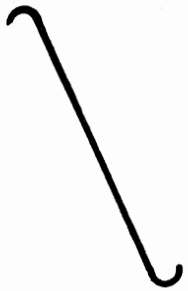

FIGURE 2

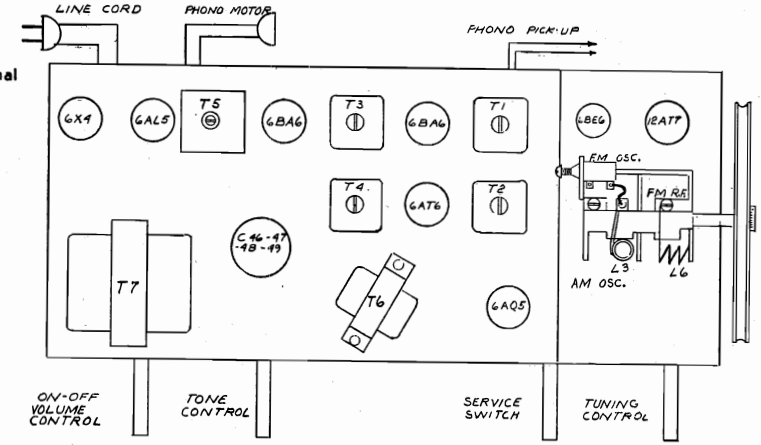

FIG. 3 TUBE AND TRIMMER LOCATIONS

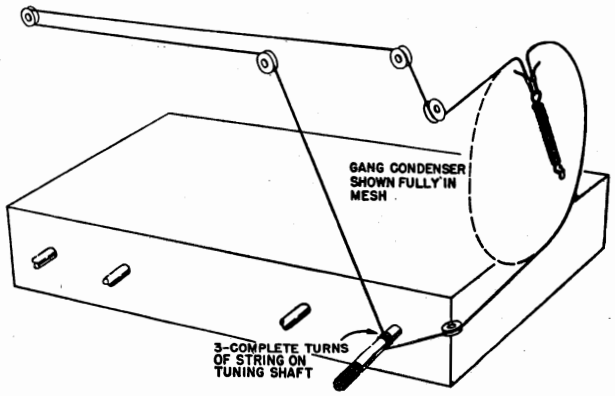

FIG. 4 DIAL CORD STRINGING

©John F. Rider

Compliments of www.nucow.com

PARTS LIST

Schematic Diagram Reference	Description
C1	Loop Trimmer
C2	Variable Cond.
C8, C9	
C11, C37	
C38	.05-200V Condenser
C3	
C4	2.2 MMF Gimmick Cond.
C5	33 MMF (Erie Style A N14004)
C6, 18	
C19, 27	
C26	5000 MMFD GMV
C42, C45, 51	
C50, C52	
C10	15 MMFD + or − 10% O° T.C. (Erie)
C12	FM Osc Trimmer
C13	1.5 MMFD (Erie Style "A")
C14, 15, 16, 17 21, 22, 23, 24, 28	Integral part of respective IF—XFMRS
C31, 32, 53, 7, 20	10,000 MMFD GMV
C25 36, 39, 54	100 MMF ceramic cond.
C29	4 - 50V Lytic condenser
C30	2000 MMFD Condenser
C33	470 MMFD Condenser
C34, 35 40, 44, 53	1000 MMFD GMV condenser
C41	.1 - 400V condenser
C43	.01 - 200V condenser
C46, 47 48, 49	40-350V, 30-300V FP Lytic Condenser 30-300V, 10-25V
R2	4.7K ohm Resistor
R3, R15	22K ohm Resistor
R4, R8, R14	1K ohm Resistor
R5, R19	100K ohm Resistor
R6, R12	68 ohm Resistor
R7, R13	10K ohm Resistor
R9, R26	47K ohm Resistor
R10, R23, R24	470K ohm Resistor
R11, R22	2.2M ohm Resistor
R16	.5M Vol. Cont. — SPST
R17, R18	12K Resistor
R20	220 ohm Resistor
R25	2.2K ohm
R27	3.3M ohm
R28	6.8M ohm
R30	270 ohm — 1 Watt
R31	100 ohm — 1 Watt
R32	1000 ohm — 5 Watt
R33	560 ohm
K1	CRL Triode couplate
L1	AM Grid Choke on R1
L2A, B	AM Osc. Coil
L3	FM Osc. Coil
L4	FM Cathode choke on R21
L5	FM plate choke
L6	FM RF Coil
L7, 8	Filament choke
T1	1st FM IF
T2	1st AM IF
T3	2nd FM IF
T4	2nd AM IF
T5	Ratio Detector
T6	Out Put XFMR
T7	Power XFMR
	Loop Ant.
B	No. 44 Pilot Light
	Line cord
	300 ohm Line Di-Pole Ant.

K=1000
M=1,000,000

All Resistors ½ Watt unless otherwise noted.
Values of Capacitors in MFD. unless otherwise stated.
Tolerance on Capacitors and Resistors + or − 20% unless otherwise stated.

©John F. Rider
Compliments of www.nucow.com

Compliments of www.nucow.com

SPECIFICATIONS

Intermediate frequency	455 kc./10.7 mc.
Tuning frequency range:	
Broadcast Band	540 1620 kc.
Short Wave Band	5.9 17.3 mc.
FM Band	88 108 mc.
Tubes:	
R-F Amplifier	6BA6
Converter	6SB7Y
1st I-F Amplifier (AM-FM)	6SG7
2nd I-F Amplifier (AM-FM)	6SG7
Limiter	6SH7
Discriminator	6H6
Detector and AVC (AM) and Tuning Indicator Amplifier	6SQ7
First Audio	6J5
Second Audio	6J5
Noise Suppressor Input	6J7
Noise Suppressor AVC Amplifier and Detector	6SQ7
Noise Suppressor Reactance Tube	6SG7
Tuning Indicator	6U5
Dial Lamps	Mazda No. 44

GENERAL

Model CR-211 radio chassis is an AM-FM tuner that must be used in conjunction with a power amplifier such as the AMP-111 for speaker operation. Heater and plate voltages for the CR-211 radio chassis are supplied from the amplifier chassis; it is therefore essential that the radio and amplifier chassis be interconnected during alignment or for other electrical service operations.

METHOD OF REMOVING CHASSIS FROM CABINET

Model CR-211 radio chassis is designed for easy removal from the cabinet in which it is installed. As the radio panel is permanently fastened to the chassis, the control knobs need not be removed when the chassis is taken out of the cabinet for service.

To remove the chassis, first remove the antenna leads from their terminals and all plugs from the receptacles on the rear of the chassis. Then remove the two Phillips-head screws from the angular slots in the flange at the rear of the chassis. Lift the rear of the chassis about one inch and pull it straight back. Never remove the chassis tray from the cabinet—it has been properly positioned to bring the radio panel in place when the chassis is replaced. In replacing the chassis, slide it so that the small hooks near the front ride inside the flanges on the sides of the chassis tray. Push the chassis forward as far as it will go and the hook should then engage the slots in the chassis tray. Replace the two Phillips-head screws and nuts and tighten securely. Replace all plugs in their receptacles and the antenna leads on their correct terminals. The antenna terminal board for the loop antenna connections is designated L-H. The two terminals on the loop are designated L and H; the leads connected to these terminals should be wired to the corresponding terminals (L and H) on the chassis.

ALIGNMENT PROCEDURE

Alignment of this receiver requires the use of an accurately calibrated RF signal generator, range 455 kc. to 107mc., an output meter, and a vacuum tube voltmeter of approximately 10 megohm input impedance. All trimmer condensers can be identified by stampings on the chassis and gang condenser cover and are shown on the chassis layout diagram. The pointer on the radio dial should line up with the first horizontal mark on the low frequency end of the dial glass. If the pointer does not line up, loosen the screws on the pointer drive pulley at the end of the tuning gang and adjust the pointer setting; tighten the screws after this adjustment. Be sure the gang is fully meshed for this pointer alignment.

©John F. Rider

Compliments of www.nucow.com

MODEL CR-211

AM ALIGNMENT

I-F ALIGNMENT

1. Set range control to position No. 1. Set volume, treble and bass controls to maximum, the Band Switch to Broadcast position, and dial pointer to 1000 kc.

2. Tune the signal generator to EXACTLY 455 kc.

3. Connect output of modulated signal generator to the signal grid of the 6SB7Y (pin 8) through a .01 mfd. capacitor and signal generator ground to radio chassis.

4. All i-f transformers on this chassis are slug-tuned. Both slug adjustments for 455 kc. are located on top of the transformers; the 10.7 mc. adjustments are accessible on the bottom.

5. Connect output meter across voice coil of 15-inch speaker and peak in order the third, second and first i-f transformers.

6. Use only enough signal input to give a readable indication on voltmeter so that the AVC will not operate and give false readings.

ALTERNATE VISUAL ALIGNMENT OF I-F STAGES

1. Connect 455 kc. sweep generator having approximately 40 kc. sweep to signal grid of 6SB7Y (pin 8) through a .01 mfd. capacitor. Connect an oscilloscope through a 1 megohm isolating resistor across the 220,000 ohm diode load resistor. Align for best possible peak with range switch in position No. 1, and symmetry in position No. 4.

BROADCAST BAND R-F ALIGNMENT

1. Connect signal generator through .00025 mfd. capacitor to antenna and ground terminals on antenna terminal strip on rear of chassis. Be sure "Ant-loop" switch on top of the chassis is in the ANT. position. Connect output meter as for AM i-f alignment.

2. Tune signal generator to 1400 kc.

3. Set dial to 1400 kc. and adjust oscillator, r-f and antenna trimmers for maximum indication on meter.

4. Set signal generator to 600 kc. and tune radio to signal. Adjust the 600 kc. padder to maximum output while simultaneously rocking the gang.

5. 1400 kc. calibration should then be checked and re-adjusted if necessary with the 1400 kc. oscillator trimmer.

SHORT WAVE BAND R-F ALIGNMENT

1. Set the Band Switch to Short Wave and replace the .00025 mfd. capacitor in series with the signal generator lead to the antenna terminal, with a 400-ohm resistor.

2. Set the signal generator and the receiver to 15 mc. and adjust the oscillator, r-f and antenna trimmers for maximum indication on the meter. While adjusting the 15 mc. oscillator trimmer, two peaks may be observed; only one is the correct peak for 15 mc. alignment. To obtain the correct peak, screw trimmer in to maximum capacitance, then decrease until the first peak is observed. This is the correct one.

Another method for checking for the correct peak is to tune the receiver to 15.91 mc. with signal generator at 15 mc. and with the output increased. If the 15 mc. oscillator trimmer is properly adjusted, the signal will be received at 15.91 mc.—if incorrectly aligned, the signal will be received at 14.09 mc.

FM ALIGNMENT

DISCRIMINATOR ALIGNMENT

1. Tune signal generator to EXACTLY 10.775 mc. and connect to pin 4 of the 6SH7 limiter tube socket through a .01 mfd. capacitor.

2. Connect a DC vacuum tube voltmeter from Pin 4 on 6H6 tube socket to ground through a 1 megohm isolating resistor..

3. Peak both discriminator slugs at 10.775 mc.

4. Retune signal generator to exactly 10.7 mc. and adjust bottom slug for zero volts.

5. The DC voltage at 10.625 mc. should be within 10% of the voltage at 10.775 mc. and of opposite polarity.

Note: If the signal generator is not capable of sufficient output to produce a readable DC voltage, the amplification of the last i-f stage can be used to increase the signal input to the limiter for discriminator alignment. To accomplish this, align the last i-f stage as indicated in "IF Alignment". Then align discriminator as above leaving the signal generator connected to the grid of the 6SG7 2nd i-f tube.

I-F ALIGNMENT

1. Connect high side of signal generator, through a .01 mfd. capacitor and a 1000 ohm resistor in series, to pin 4 of the 6SG7 2nd i-f tube. Connect low side of generator to chassis.

©John F. Rider

Compliments of www.nucow.com

2. Close gang condenser and connect vacuum tube voltmeter across 220,000 ohm limiter grid resistor; (Points "A" to "X" on schematic). Adjust signal generator output until a reading of at least 3 volts is obtained. In order to reduce regeneration caused by the vacuum tube voltmeter leads, a 1-megohm isolating resistor, connected with as short leads as possible to point "A" should be used in series with the vacuum tube voltmeter. Align the 3rd i-f transformer for best peak as indicated on voltmeter.

3. Repeat above for the 2nd and 1st transformer by connecting signal generator to signal grid of first i-f tube 6SG7 then to the signal grid of 6SB7Y converter. The i-f stages should be aligned in this order.

WARNING—After each i-f stage has been individually aligned, do not repeak with the signal into the grid of the 6SB7Y.

ALTERNATE VISUAL ALIGNMENT OF I-F STAGES

1. Replace signal generator with sweep generator having approximately 300 kc. sweep and tune generator to 10.7 mc. Connect oscilloscope across 220,000 ohm limiter grid resistor through a 1-megohm isolating resistor. The order of alignment is the same as when using a vacuum tube voltmeter. Each i-f transformer should be individually aligned for best peak and symmetry.

R-F ALIGNMENT

1. Connect vacuum tube voltmeter across limiter grid resistor as in FM I-F alignment. Adjust signal generator output until a reading of at least 3 volts is obtained.

2. Ground one side of the FM Antenna by placing a wire jumper from one FM connection on the antenna terminal strip to the ground connection.

3. Connect unmodulated signal generator through a 300 ohm resistor to ungrounded antenna post and chassis, and tune signal generator to 107 mc.

4. Set radio dial to 107 mc. and tune oscillator trimmer to peak output on vacuum tube voltmeter.

5. Tune 107 mc. r-f and antenna trimmers for maximum indication on voltmeter—it may be necessary to rock the gang while adjusting the r-f trimmer.

THE NOISE SUPPRESSOR

This chassis incorporates an automatic noise suppressor to reduce scratch and noise from phonograph reproduction.

The noise suppressor functions only when the band control switch is in "Phono" position and is automatically switched out of the circuit when the band control switch is in any position except "Phono"

To turn the noise suppressor on press the noise suppressor button and release so that the white dot on the top side of the knob is visible. To disconnect the noise suppressor from the circuit press the button in and release so that the white dot is no longer visible.

Tube replacements in the noise suppressor circuit will usually necessitate an adjustment of the bias gain control.

ADJUSTMENT

It is recommended that the following equipment be used in making noise suppressor adjustments:

DC vacuum tube voltmeter, 10 megohm or greater input impedance.

Columbia No. 10004 test record.

1. Connect record changer to noise suppressor and noise suppressor to radio chassis. Obtain test signal by playing Columbia No. 10004 test record at 1500 cycles with radio band switch in "Phono" position. Set bias gain control to give −4.0 volts bias measured from pins 4 and 5 on 6SQ7 to ground with DC vacuum tube voltmeter.
2. If the recommended test equipment is not available the noise suppressor can be adjusted to a reasonably accurate degree by a listening test using a 12-inch record having a moderate amount of surface noise. Turn noise suppressor on, range and treble controls to maximum (clockwise) and bias gain control to extreme counter-clockwise position. Then place stylus in outside groove of record with the turn-table running and adjust bias gain control to a point where the surface noise is barely audible. In making this adjustment the stylus should not be permitted to run into the recorded section of the record.

SPECIAL SERVICE INFORMATION

The following information is provided for the service man who has a vacuum tube voltmeter or a similar measuring instrument available.

STAGE GAINS*

Antenna Post to R-F Grid at:	
600 kc.	5.8
6.5 mc.	2.9
98 mc.	1.0
R-F Grid to Converter Grid at:	
600 kc.	11.6
6.5 mc.	9.5
98 mc.	6.8
R-F on Converter Grid to 455 kc. on I-F Grid at:	
600 kc.	1.7
6.5 mc.	2.4
98 mc.	6.8

©John F. Rider

Compliments of www.nucow.com

MODEL CR-211

I-F on Converter Grid to 1st I-F Grid at:
455 kc. (dial pointer at 600 kc.) 2.6

1st I-F Grid to 2nd I-F Grid at:
455 kc. 20.5
10.7 mc. 37

2nd I-F Grid to Limiter Grid at:
10.7 mc. 34.5

AUDIO GAIN

Voltage required across the Volume Control to produce 0.1 watt speaker output** at 400 cycles is:
.013 volt with Amplifier AMP-111A
.008 volt with Amplifier AMP-111B or C
with Band Switch in BDCST setting.

OSCILLATOR OUTPUT VOLTAGE

The DC voltage developed across the Oscillator Grid Resistor (105) at:
600 kc. ..... 4.5V.
6.5 mc. ..... 4.6V.
98 mc. ..... 5.4V.

or 0.3 ma. through 15,000 ohm Oscillator Grid Resistor at 600 kc., 0.31 ma. at 6.5 mc. and 0.36 ma. at 98 mc.

*Variations of ±20% are permissible. All AM readings made with sufficient input signal to provide 0.5 watt speaker output. 0.5 watt speaker output at 400 cycles is equivalent to a reading of 2.75V. as measured by a high resistance AC voltmeter across the voice coil of the 15-inch speaker.

**0.1 watt speaker output at 400 cycles is equivalent to a reading of 1.22 volts as measured by a high resistance AC voltmeter across the voice coil of 15-inch speaker.

10 KC. FILTER ADJUSTMENT

This chassis incorporates a 10 kc. filter circuit to eliminate the beat note heard as a whistle between stations on the broadcast band. If the trimmer is out of adjustment the following procedure should be observed:

1. Adjust the treble control switch to the No. 3 setting.

2. Remove the noise suppressor plug from the radio chassis and connect the output of an audio oscillator to the phonograph pickup socket. Adjust the oscillator to exactly 10,000 cycles.

3. Set the band selector to PHONO and adjust the 10 kc. trimmer for minimum output.

4. If an audio oscillator is not available for making this adjustment set the band selector to BDCST, set the range control to position 3, connect the antenna to the receiver and set the gang condenser to a point between two stations on adjacent channels having approximately the same power. If the 10 kc. trimmer is out of adjustment, a whistle will be heard. Adjust the trimmer until the whistle is eliminated.

DIAL CORD REPLACEMENT

Rotate the brass pulley designated "A" in Figure 1 until the dial pointer strikes the stop at the high frequency end of the dial calibration. In this condition the slot in pulley "A" should be approximately ten degrees to the left of being vertical—see Figure 1. If the slot in the pulley is in some other position under the above mentioned conditions, the pointer set screw is probably loose and has allowed the pointer to slip.

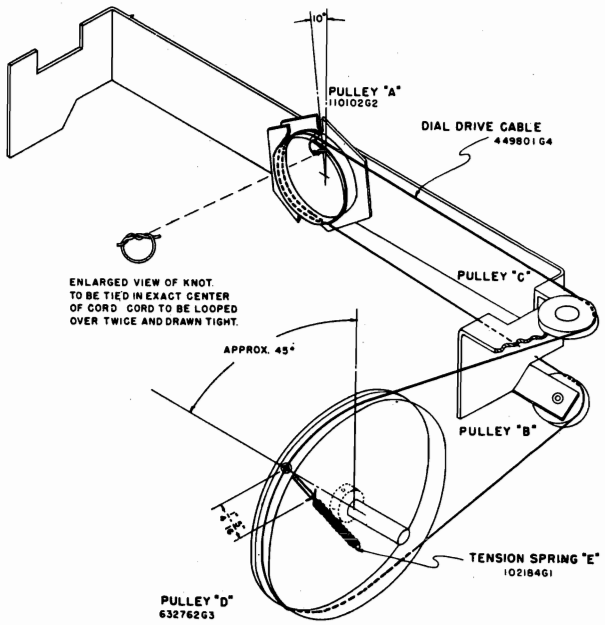

FIGURE 1

To correct this condition, first remove the glass dial and loosen the pointer screw. Then while holding pulley "A" so that its slot is approximately ten degrees to the left of vertical (when viewed from the rear) adjust the pointer until it is resting against the stop at the high frequency end of its travel. Then tighten the pointer set screw securely and replace the glass dial.

Completely unmesh the condenser gang and check the location of the hole or slot in pulley "D". If this hole is not approximately 45 degrees back from vertical as shown on Figure 1, loosen the two No. 6 Allen set screws in the hub of pulley "D" and slip the pulley on its shaft (while holding the condenser gang unmeshed) until the specified adjustment is obtained; then tighten one of the set screws securely. It will be shown later that this is a temporary setting. Next, tie a double knot in the exact center of a 25-inch length of dial cable and fold the cable back on itself so that the knot is at one end. The correct method for tying this knot is shown as an inset on Figure 1. Grasp the cable near the knotted end and slide it into the pulley slot so that the knot is against

©John F. Rider

Compliments of www.nucow.com

the inside rim of the pulley as shown in the sketch. The piece of cable nearest the dial frame should be wound in the direction shown for one-half turn; then over the lower pulley "B", around the bottom of the large pulley "D" and into the hole. Pull the cable taut and wrap the end around the small hook on pulley "D" temporarily.

The remaining piece of cable should be wound around pulley "A" in the direction shown, for one complete turn, over the upper pulley "C", and over the top of pulley "D". Thread the end through the small hole in pulley "D" and pull both ends of the cable taut. With one end of tension spring "E" fastened to the hook on pulley "D" lace the two free ends of the cable through the opposite end of the spring and tie a knot at a point that will allow 1/4" to 5/16" of cable between the spring and the inside rim of pulley "D". Be sure to tie the knot around one coil of the spring in the manner shown.

Now with the condenser gang completely meshed, check the position of the dial pointer. If it is not in line with the last calibration mark at the low frequency end of the dial, loosen the set screw in pulley "D" and turn it until the pointer is in the specified position. Be sure that the condenser gang does not move during this adjustment. Then tighten the two screws in pulley "D" securely completing the operation.

CONDENSER GANG DRIVE ADJUSTMENTS

Whenever any of the mechanical parts in the condenser gang drive assembly require replacement due to rough handling or for any other reason, it is extremely important that clearances and adjustments shown on Figures 2 and 3 are correct; otherwise, the tuning mechanism will be sluggish or it may slip during operation.

In reassembling the mechanism after any part was replaced, follow the procedure outlined below:

1. Assemble the Tuning Shaft, Drive Collar, Compression Spring and Flywheel in the order shown on Figure 3. The distance between the front of the Drive Collar and the front of the Tuning Shaft must be 1 1/8 inches as specified on Figure 2. Install the Flywheel on the rear of the Tuning Shaft and slide it forward until it nearly touches the edge of the Drive Wheel; then tighten one of the set screws in the Flywheel hub. Insert a .010" gauge between the Flywheel and the Pin, and while holding the gauge in this position, loosen the set screw in the Flywheel hub that was previously tightened. The Compression Spring should force the Flywheel back against the gauge—when this occurs, tighten both set screws in the Flywheel hub.

2. Adjust the Muting Switch contact clearance by loosening the two screws in the Contact Bracket and

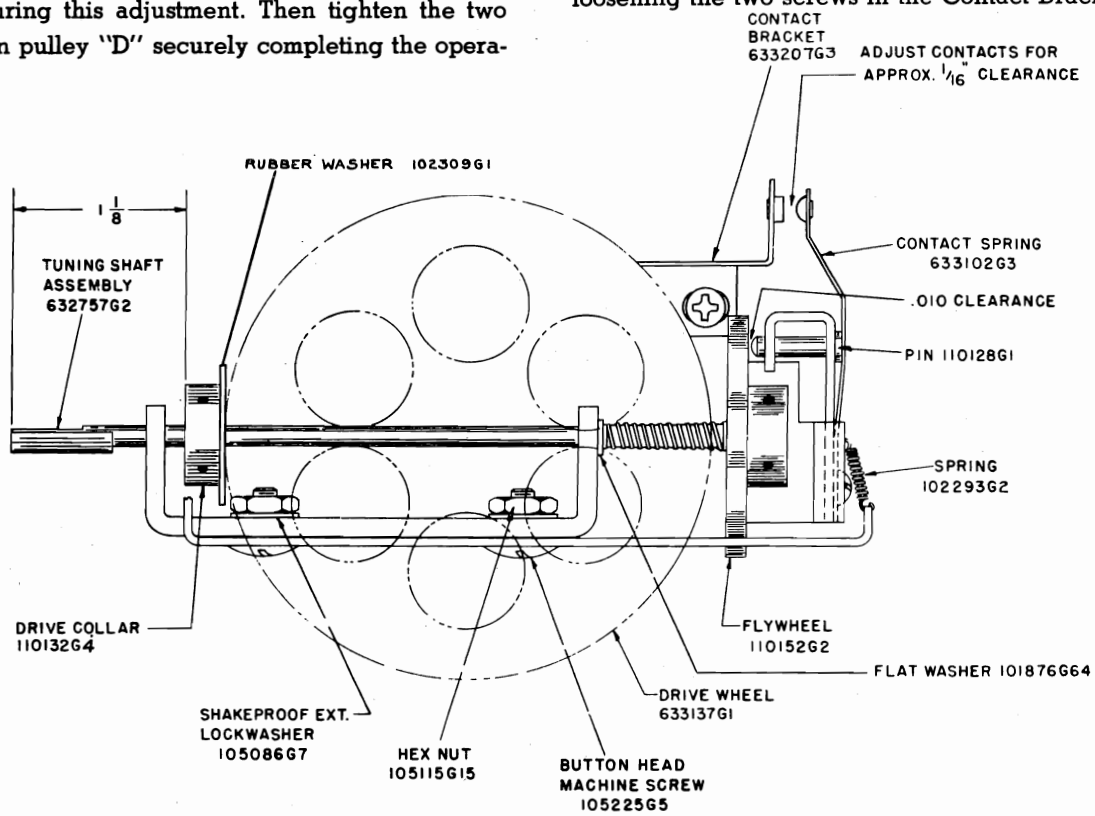

FIGURE 2

©John F. Rider

Compliments of www.nucow.com

MODEL CR-211

sliding the bracket in the required direction until a 1/16" clearance is obtained. If this adjustment cannot be obtained in the manner prescribed, bend the Contact Bracket until proper clearance is realized.

3. The Drive Wheel is properly located on its shaft when its edge nearest the hub is in line with the outside edge of the Drive Collar as shown on Figure 3. Two Allen set screws in the Drive Wheel hub provide a means of adjusting the position of this wheel.

4. When the adjustment outlined in paragraph 2 is correct, the proper contact clearance will automatically be obtained when the Muting Switch is to be "unmuted" while the push buttons are being set. While pressure is applied to any one of the push buttons while they are being set up, a pressure applied simultaneously to the Tuning Control knob will cause the Muting Switch contacts to open. Detailed instructions on setting up these push buttons are shown elsewhere in this bulletin.

5. If the push button shafts at both ends do not engage the Treadle Bar as shown on Figure 3, the three screws in the Treadle Bar must be loosened and the Treadle Bar should be moved until the required condition is obtained.

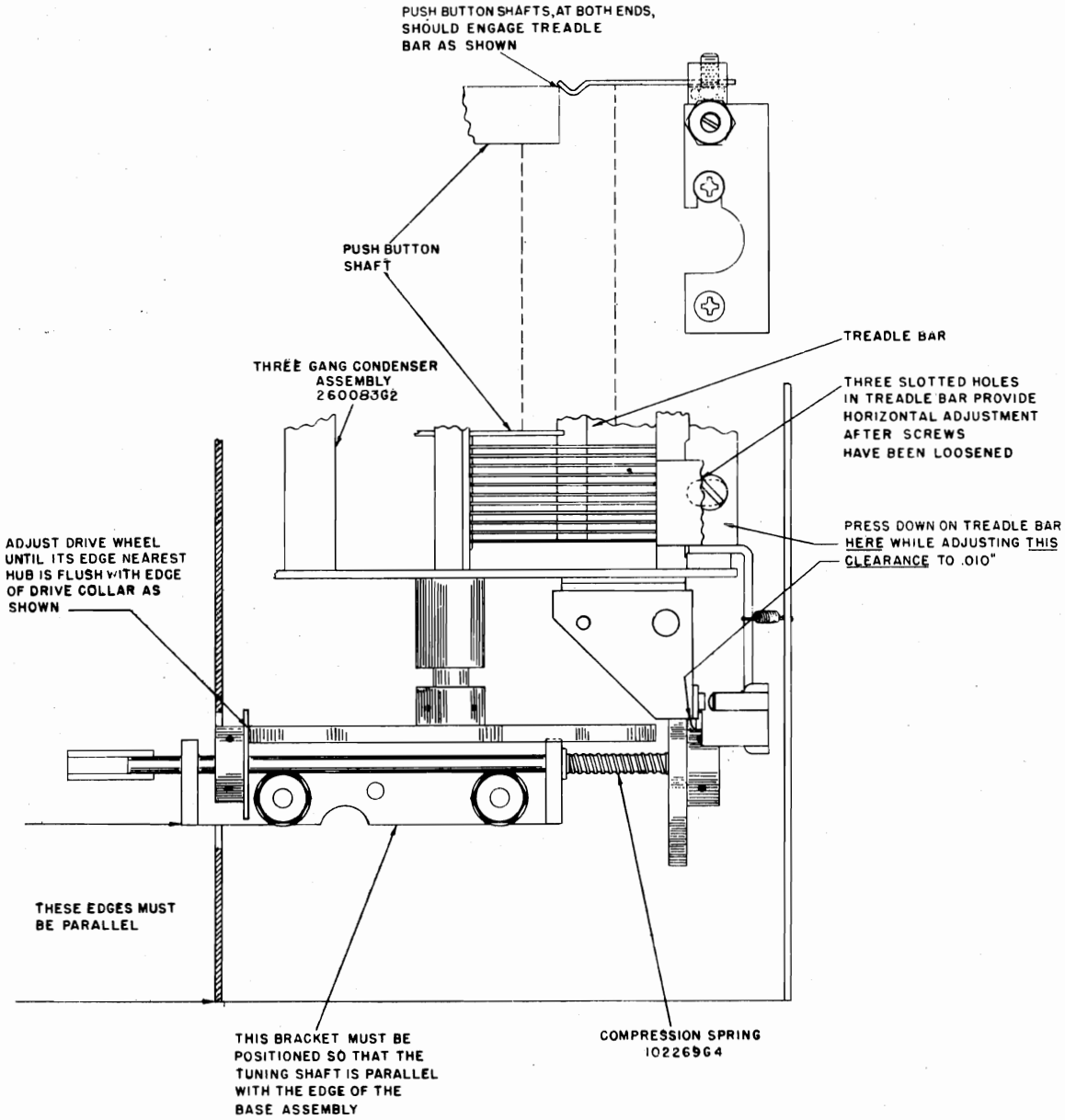

FIGURE 3

©John F. Rider

Compliments of www.nucow.com

MODEL CR-211

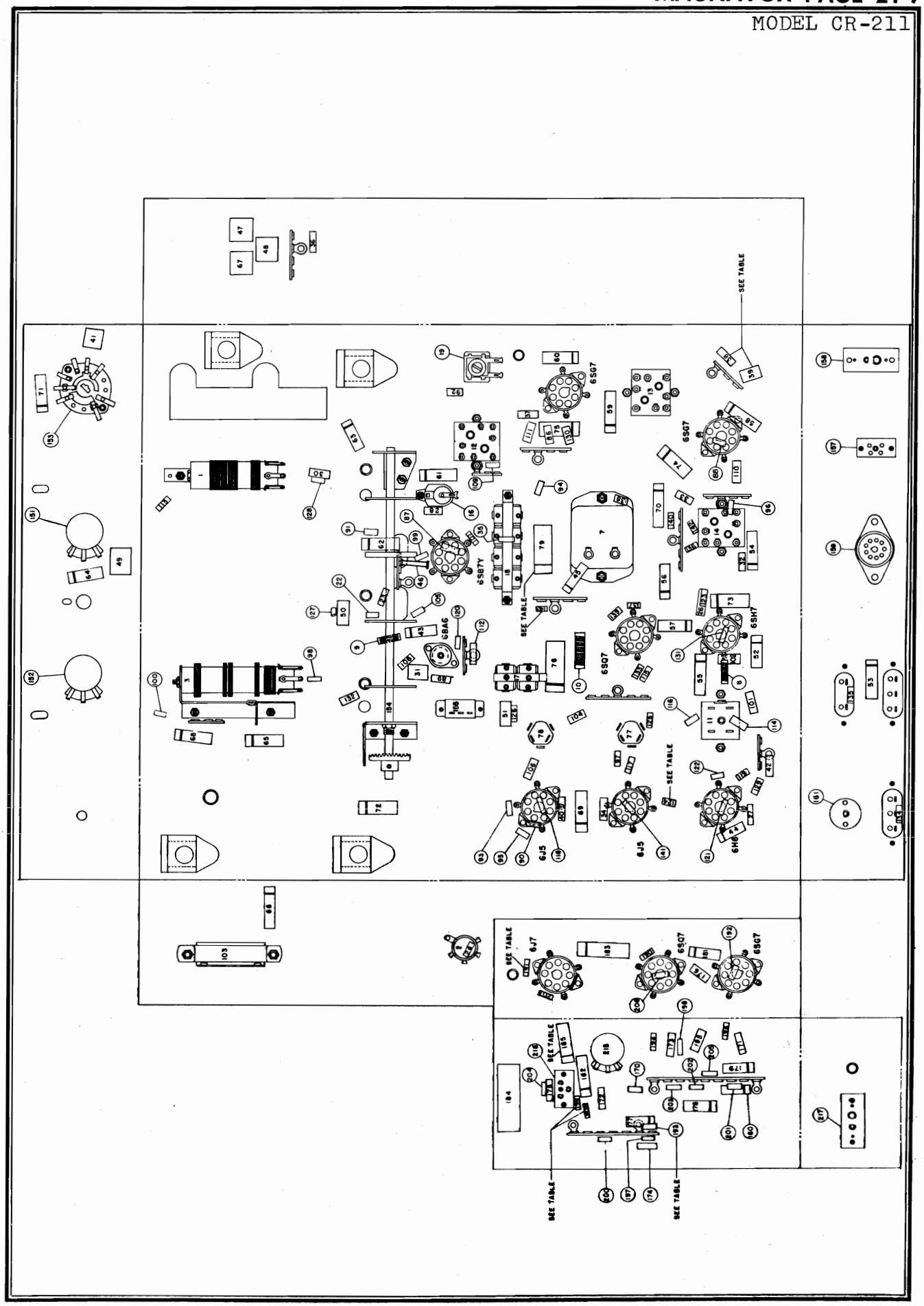

©John F. Rider

Compliments of www.nucow.com

MODEL CR-211

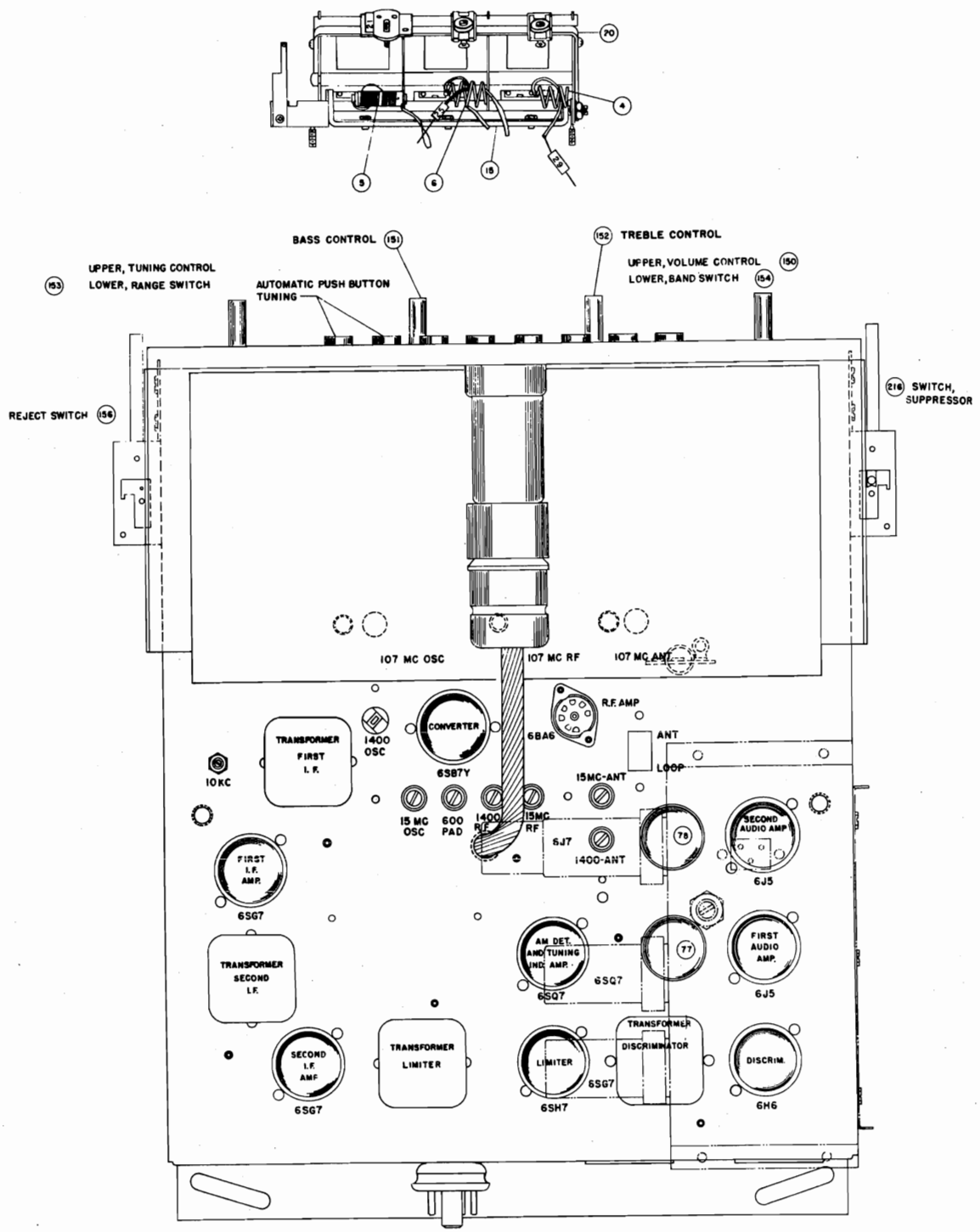

ITEM NO.	ELECTRICAL VALUES CR211A	CR211B	
38	510	OMIT	
39	510	OMIT	
79	OMIT	.005	
124	220K	470K	
143	OMIT	33K	
185	OMIT	.1 MFD	
191	5600	1000	
193	68K	22K	
199	330K	47K	
208	OMIT	120K	

FIGURE 4

©John F. Rider

Compliments of www.nucow.com

MODEL CR-211

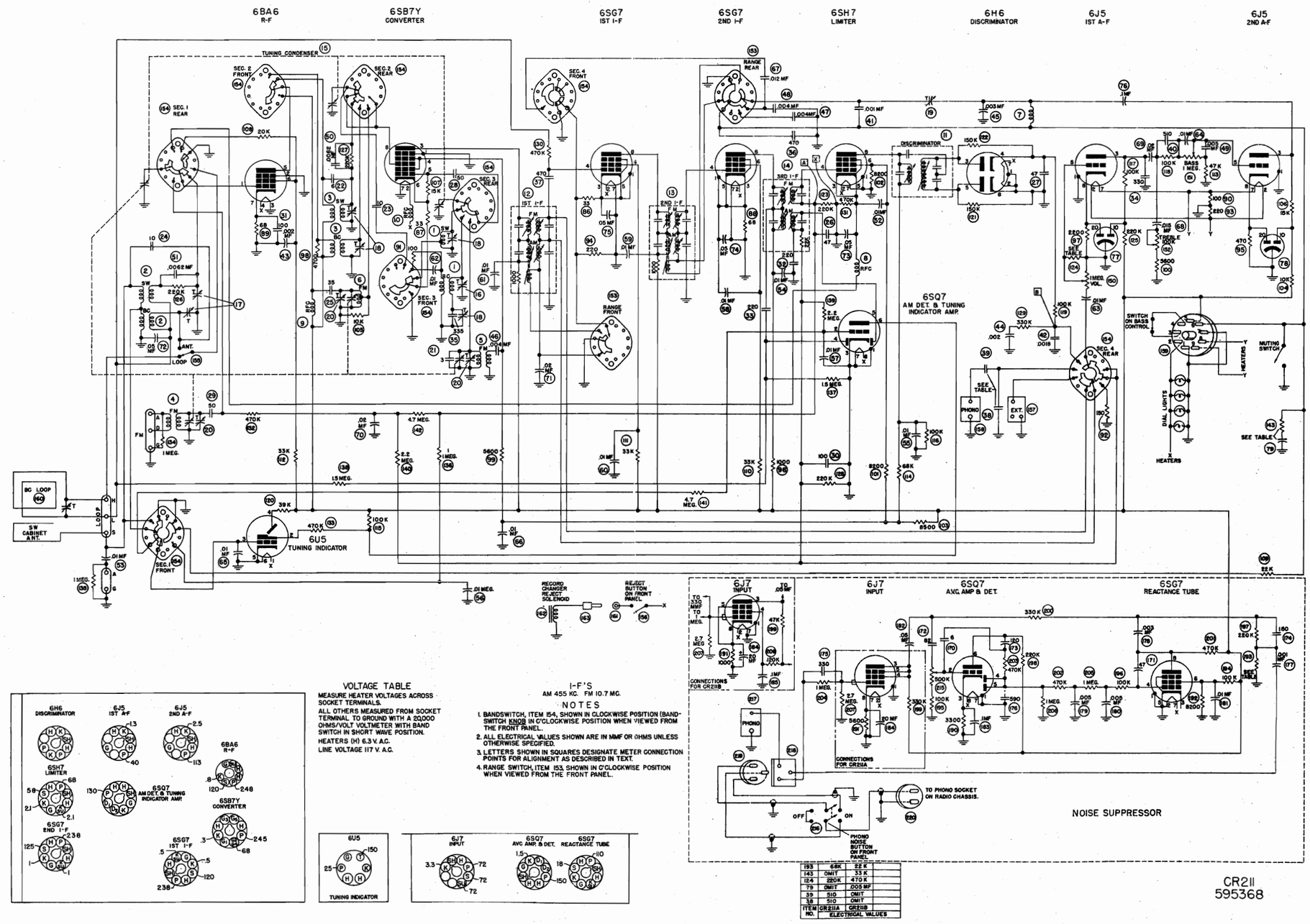

VOLTAGE TABLE

MEASURE HEATER VOLTAGES ACROSS SOCKET TERMINALS.

ALL OTHERS MEASURED FROM SOCKET TERMINAL TO GROUND WITH A 20,000 OHMS/VOLT VOLTMETER WITH BAND SWITCH IN SHORT WAVE POSITION.

HEATERS (H) 6.3 V. A.C.

LINE VOLTAGE 117 V. A.C.

I-F'S

AM 455 KC. FM 10.7 MC.

NOTES

1. BANDSWITCH, ITEM 154, SHOWN IN CLOCKWISE POSITION (BANDSWITCH KNOB IN C'CLOCKWISE POSITION WHEN VIEWED FROM THE FRONT PANEL.
2. ALL ELECTRICAL VALUES SHOWN ARE IN MMF OR OHMS UNLESS OTHERWISE SPECIFIED.
3. LETTERS SHOWN IN SQUARES DESIGNATE METER CONNECTION POINTS FOR ALIGNMENT AS DESCRIBED IN TEXT.
4. RANGE SWITCH, ITEM 153, SHOWN IN C'CLOCKWISE POSITION WHEN VIEWED FROM THE FRONT PANEL.

ITEM NO.	ELECTRICAL VALUES CR211A	CR211B	
193	68K	22K	
143	OMIT	33K	
124	220K	470K	
79	OMIT	.005 MF	
39	510	OMIT	
38	510	OMIT	

FIGURE 5

©John F. Rider

Compliments of www.nucow.com

MODEL CR-211

REFERENCE NO.	DESCRIPTION	MAGNAVOX PART NO.
139	Resistor, Composition, 2.2 Megohm, ½ W.	23009463
140	Resistor, Composition, 2.2 Megohm, ½ W.	23009463
141	Resistor, Composition, 4.7 Megohm, ½ W.	23009635
142	Resistor, Composition, 4.7 Megohm, ½ W.	23009635
143	Resistor, Composition, 33,000 Ohms, ½ W., ± 10%. (Used on CR 211B Only)	23009680
150	Control, Volume, 1 Megohm	22004624
151	Control, Bass, 1 Megohm with Switch	23007356
152	Control, Treble	16017861
153	Control, Balance	22004626
154	Switch, Rotary, Band Switch	16017951
155	Switch, Slide SPDT	16017561
156	Switch, Reject	16018861
157	Socket, External Input	18000061
158	Socket, Phono.	18974161
159	Socket, Amplifier	18047162
160	Antenna Loop Assembly	46063761
161	Socket, Solenoid	18277661
162	Solenoid	36031361
163	Plug, Solenoid	18914761
	Dial Glass Assembly	15030561
	Push Button Assembly for Gang	26009561
	NOISE SUPPRESSOR	
170	Capacitor, Ceramic & Composition, 6 mmf. ±1 mmf., 500 V.	25016462
171	Capacitor, Mica, 47 mmf., 500 V.	25019696
172	Capacitor, Mica, 82 mmf., ± 10%, 500 V.	25019681
173	Capacitor, Mica, 120 mmf., ± 10%, 500 V.	25019683
174	Capacitor, Mica, 150 mmf., ± 10%, 500 V.	25019684
175	Capacitor, Mica, 330 mmf., 500 V.	25019610
176	Capacitor, Ceramic, 590 mmf.	25008641
177	Capacitor, Paper, .001 mfd., ± 10%, 600 V.	25019611
178	Capacitor, Paper, .003 mfd., ± 10%, 600 V.	25019656
179	Capacitor, Paper, .005 mfd., 400 V.	25015230
180	Capacitor, Paper, .005 mfd., 400 V.	25015230
181	Capacitor, Paper, .01 mfd., 200 V.	25015218
182	Capacitor, Paper, .05 mfd., 200 V.	25015215
183	Capacitor, Paper, .1 mfd., 200 V.	25015213
184	Capacitor, Electrolytic, 20 mfd., 25 V.	27002762
185	Capacitor, Paper, .1 mfd., 400 V., (Used on Amp. 119B Only)	25015222
190	Resistor, Composition, 3300 Ohms, ½ W.	23009616
191	Resistor, Composition, 5600 Ohms, ½ W., ± 10%, (Used on 119A Only)	23009671
	Resistor, Composition, 1000 Ohms, ½ W. (Used on 119B Only).	23009613
192	Resistor, Composition, 8200 Ohms, ½ W., ± 10%	23009673
193	Resistor, Composition, 68,000 Ohms, ½ W., ± 10%, (Used on 119A Only)	23009684
	Resistor, Composition, 22,000 Ohms, ½ W., ± 10%, (Used on 119B Only)	23009678
194	Resistor, Composition, 100,000 Ohms, 1 W., ± 10%	23005686
195	Resistor, Composition, 100,000 Ohms, ½ W.	23009625
196	Resistor, Composition, 100,000 Ohms, ½ W., ± 10%	23009686
197	Resistor, Composition, 220,000 Ohms, ½ W., ± 10%	23009690
198	Resistor, Composition, 220,000 Ohms, ½ W.	23009627
199	Resistor, Composition, 330,000 Ohms, ½ W., (Used on 119A Only)	23009628
	Resistor, Composition, 47,000 Ohms, ½ W., ± 10%, (Used on 119B Only)	23009682
200	Resistor, Composition, 330,000 Ohms, ½ W.	23009628
201	Resistor, Composition, 470,000 Ohms, ½ W.	23009629
202	Resistor, Composition, 470,000 Ohms, ½ W.	23009629
203	Resistor, Composition, 470,000 Ohms, ½ W.	23009629
204	Resistor, Composition, 1 Megohm, ½ W.	23009631
205	Resistor, Composition, 1 Megohm, ½ W.	23009631
206	Resistor, Composition, 1 Megohm, ½ W.	23009631
207	Resistor, Composition, 2.7 Megohm, ½ W., ± 10%	23009693
	Resistor, Composition, 120,000 Ohms, ½ W., ± 10%, (Used on 119B Only)	23009687
215	Potentiometer, Control Channel Gain	22007561
216	Switch	16018761
217	Socket, Phono. Input	18974161
218	Socket, Switch	18013964
219	Plug, Switch	18031169
220	Plug, Phono.	18031161

REFERENCE NO.	DESCRIPTION	MAGNAVOX PART NO.
1	Coil Assembly, Oscillator (AM)	36029661
2	Coil Assembly, Antenna (AM)	36029661
3	Coil Assembly, R.F. (AM)	36030661
4	Coil Assembly, Antenna (FM)	36029663
5	Coil Assembly, Oscillator (FM)	36029561
6	Coil Assembly, R.F. (FM)	36029764
7	Coil Assembly, 10 K.C.	36024461
8	Coil, Choke	36029461
9	Coil, Choke	36029461
10	Coil, Choke Filament	36026461
11	Transformer, Discriminator	36030561
12	Transformer, I.F.	36028561
13	Transformer, I.F.	36028561
14	Transformer, Limiter	36028661
15	Capacitor, Variable, Three Gang Tuning	26007561
16	Capacitor, Variable, Oscillator Trimmer (Broadcast)	26006764
17	Capacitor, Variable, 2 Gang Trimmer	26008661
18	Capacitor, Variable, 4 Gang Trimmers and Oscillator Padder	26008261
19	Capacitor, Variable, 10 K.C. Trimmer	25961062
20	Capacitor, Trimmer Assembly	26009461
21	Capacitor, Ceramic, 3 mmf.	25008638
22	Capacitor, Ceramic & Composition, 6 mmf.	25016462
23	Capacitor, Ceramic & Composition, 10 mmf.	25016463
24	Capacitor, Ceramic & Composition, 10 mmf.	25016463
25	Capacitor, Ceramic, 35 mmf.	25008640
26	Capacitor, Mica, 47 mmf.	25019696
27	Capacitor, Mica, 47 mmf.	25019696
28	Capacitor, Ceramic, 50 mmf.	25008639
29	Capacitor, Ceramic, 50 mmf.	25008639
30	Capacitor, Mica, 100 mmf.	25019698
31	Capacitor, Mica, 100 mmf.	25019698
32	Capacitor, Mica, 220 mmf.	25019699
33	Capacitor, Mica, 220 mmf.	25019699
34	Capacitor, Mica, 330 mmf.	25019610
35	Capacitor, Silver Mica, 335 mmf., ± 1%	25008638
36	Capacitor, Mica, 470 mmf.	25019610
37	Capacitor, Mica, 470 mmf.	25019610
38	Capacitor, Mica, 510 mmf., ± 5%, (Used on CR 211A Only)	25019665
39	Capacitor, Mica, 510 mmf., ± 5%, (Used on CR 211B Only)	25019662
40	Capacitor, Mica, 510 mmf., ± 5%	25019664
41	Capacitor, Mica, 1000 mmf.	25016682
42	Capacitor, Mica, 1800 mmf., ± 10%	25016667
43	Capacitor, Paper, .002 mfd., 600 V.	25012644
44	Capacitor, Paper, .002 mfd., 600 V., ± 10%	25016962
45	Capacitor, Paper, .003 mfd., 600 V., ± 10%	25016965
46	Capacitor, Ceramic, .004 mfd.	25008634
47	Capacitor, Molded Paper, .004 mfd., 600 V.	25012967
48	Capacitor, Molded Paper, .004 mfd., 600 V.	25012967
49	Capacitor, Molded Paper, .005 mfd., 400 V.	25012610
50	Capacitor, Mica, .0062 mfd., ± 5%	25016627
51	Capacitor, Mica, .0062 mfd., ± 5%	25016627
52	Capacitor, Paper, .01 mfd., 400 V.	25015627
53	Capacitor, Paper, .01 mfd., 400 V.	25015627
54	Capacitor, Paper, .01 mfd., 400 V.	25015627
55	Capacitor, Paper, .01 mfd., 400 V.	25015627
56	Capacitor, Paper, .01 mfd., 400 V.	25015627
57	Capacitor, Paper, .01 mfd., 400 V.	25015627
58	Capacitor, Paper, .01 mfd., 400 V.	25015627
59	Capacitor, Paper, .01 mfd., 400 V.	25015627
60	Capacitor, Paper, .01 mfd., 400 V.	25015627
61	Capacitor, Paper, .01 mfd., 400 V.	25015627
62	Capacitor, Paper, .01 mfd., 400 V.	25015627
63	Capacitor, Paper, .01 mfd., 400 V.	25015627
64	Capacitor, Paper, .01 mfd., 400 V.	25015627
65	Capacitor, Paper, .01 mfd., 400 V.	25015627
66	Capacitor, Paper, .01 mfd., 400 V.	25015627
67	Capacitor, Molded Paper, .012 mfd., 200 V.	25012963

REFERENCE NO.	DESCRIPTION	MAGNAVOX PART NO.
68	Capacitor, Paper, .015 mfd., ± 10%, 200 V.	25012965
69	Capacitor, Paper, .02 mfd., 400 V.	25012966
70	Capacitor, Paper, .02 mfd., 400 V.	25012966
71	Capacitor, Paper, .02 mfd., 400 V.	25012966
72	Capacitor, Paper, .05 mfd., 200 V.	25012968
73	Capacitor, Paper, .05 mfd., 200 V.	25012968
74	Capacitor, Paper, .05 mfd., 200 V.	25012968
75	Capacitor, Paper, .05 mfd., 200 V.	25012968
76	Capacitor, Paper, .1 mfd., 400 V.	25012970
77	Capacitor, Electrolytic, 10 mfd., 450 V., 20 mfd., 25 V.	27002761
78	Capacitor, Electrolytic, 10 mfd., 450 V., 20 mfd., 25 V.	27002761
79	Capacitor, Molded Paper, .005 mfd., 400 V., (Used on CR 211B Only)	25012965
85	Resistor, Composition, 33 Ohms, ½ W.	23009601
86	Resistor, Composition, 33 Ohms, ½ W.	23009601
87	Resistor, Composition, 33 Ohms, ½ W.	23009601
88	Resistor, Composition, 68 Ohms, ½ W.	23009603
89	Resistor, Composition, 68 Ohms, ½ W.	23009603
90	Resistor, Composition, 100 Ohms, ½ W., ± 10%	23009605
91	Resistor, Composition, 100 Ohms, ½ W.	23009605
92	Resistor, Composition, 150 Ohms, ½ W.	23009607
93	Resistor, Composition, 220 Ohms, ½ W., ± 10%	23009609
94	Resistor, Composition, 220 Ohms, ½ W.	23009609
95	Resistor, Composition, 470 Ohms, ½ W.	23009611
96	Resistor, Composition, 1000 Ohms, ½ W.	23009613
97	Resistor, Composition, 2200 Ohms, ½ W.	23009615
98	Resistor, Composition, 4700 Ohms, ½ W.	23009617
99	Resistor, Composition, 5600 Ohms, ½ W., ± 10%	23009671
100	Resistor, Composition, 5600 Ohms, ½ W., ± 10%	23009671
101	Resistor, Composition, 8200 Ohms, 1 W., ± 10%	23009673
102	Resistor, Composition, 8200 Ohms, 1 W., ± 10%	23009673
103	Resistor, Strip, 8500 Ohms	23005675
104	Resistor, Composition, 10,000 Ohms, 1 W.	23009675
105	Resistor, Composition, 10,000 Ohms, ½ W.	23009675
106	Resistor, Composition, 15,000 Ohms, 1 W.	23009677
107	Resistor, Composition, 15,000 Ohms, ½ W.	23009677
108	Resistor, Composition, 20,000 Ohms, 1 W., ± 5%	23009678
109	Resistor, Composition, 22,000 Ohms, ½ W.	23009678
110	Resistor, Composition, 33,000 Ohms, 1 W.	23005680
111	Resistor, Composition, 33,000 Ohms, 1 W.	23005680
112	Resistor, Composition, 33,000 Ohms, 2 W., ± 10%	23005680
113	Resistor, Composition, 47,000 Ohms, ½ W.	23009682
114	Resistor, Composition, 68,000 Ohms, ½ W., ± 10%	23009684
115	Resistor, Composition, 100,000 Ohms, ½ W.	23009686
116	Resistor, Composition, 100,000 Ohms, ½ W.	23009686
117	Resistor, Composition, 100,000 Ohms, ½ W.	23009686
118	Resistor, Composition, 100,000 Ohms, ½ W.	23009686
119	Resistor, Composition, 100,000 Ohms, ½ W., ± 10%	23009686
120	Resistor, Composition, 39,000 Ohms, ½ W., ± 10%	23009679
121	Resistor, Composition, 150,000 Ohms, ½ W., ± 10%	23009691
122	Resistor, Composition, 150,000 Ohms, ½ W., ± 10%	23009691
123	Resistor, Composition, 220,000 Ohms, ½ W.	23009693
124	Resistor, Composition, 220,000 Ohms, ½ W., (Used on CR 211A Only)	23009693
	Resistor, Composition, 470,000 Ohms, ½ W., ± 10%, (Used on CR 211B Only)	23009695
125	Resistor, Composition, 220,000 Ohms, ½ W.	23009693
126	Resistor, Composition, 220,000 Ohms, ½ W.	23009693
127	Resistor, Composition, 220,000 Ohms, ½ W.	23009693
128	Resistor, Composition, 220,000 Ohms, ½ W.	23009693
129	Resistor, Composition, 330,000 Ohms, ½ W., ± 10%	23009695
130	Resistor, Composition, 470,000 Ohms, ½ W.	23009695
131	Resistor, Composition, 470,000 Ohms, ½ W.	23009695
132	Resistor, Composition, 470,000 Ohms, ½ W.	23009695
133	Resistor, Composition, 470,000 Ohms, ½ W.	23009695
134	Resistor, Composition, 1 Megohm, ½ W.	23009697
135	Resistor, Composition, 1 Megohm, ½ W.	23009697
136	Resistor, Composition, 1 Megohm, ½ W.	23009697
137	Resistor, Composition, 1.5 Megohm, ½ W.	23009699
138	Resistor, Composition, 1.5 Megohm, ½ W.	23009699

©John F. Rider

MODEL CR-213

SPECIFICATIONS

Intermediate frequency ..... 455 kc./10.7 mc.

Tuning frequency range:
- Broadcast Band ..... 540—1620 kc.
- Short Wave Band ..... 5.9—17.3 mc.
- FM Band ..... 88—108 mc.

Tubes:
- R-F Amplifier 6BA6
- Converter 6SB7Y
- 1st I-F Amplifier (AM-FM) 6SG7
- 2nd I-F Amplifier (AM-FM) 6SG7
- Limiter 6SH7
- Discriminator 6H6
- Detector and AVC (AM) and Tuning Indicator Amplifier 6SQ7
- First Audio 6J5
- Second Audio 6J5
- Noise Suppressor Input 6J7
- Noise Suppressor AVC Amplifier and Detector 6SQ7
- Noise Suppressor Reactance Tube 6SG7
- Tuning Indicator 6U5
- Dial Lamps ..... Mazda No. 44

GENERAL

Model CR-213 radio chassis is an AM-FM tuner that must be used in conjunction with a power amplifier such as the AMP-116 for speaker operation. Heater and plate voltages for the CR-213 radio chassis are supplied from the amplifier chassis; it is therefore essential that the radio and amplifier chassis be interconnected during alignment or for other electrical service operations.

METHOD OF REMOVING CHASSIS FROM CABINET

Model CR-213 radio chassis is designed for easy removal from the cabinet in which it is installed. As the radio panel is permanently fastened to the chassis, the control knobs need not be removed when the chassis is taken out of the cabinet for service.

To remove the chassis, first remove the antenna leads from their terminals and all plugs from the receptacles on the rear of the chassis. Then remove the two Phillips-head screws from the angular slots in the flange at the rear of the chassis. Lift the rear of the chassis about one inch and pull it straight back. Never remove the chassis tray from the cabinet—it has been properly positioned to bring the radio panel in place when the chassis is replaced. In replacing the chassis, slide it so that the small hooks near the front ride inside the flanges on the sides of the chassis tray. Push the chassis forward as far as it will go and the hook should then engage the slots in the chassis tray. Replace the two Phillips-head screws and nuts and tighten securely. Replace all plugs in their receptacles and the antenna leads on their correct terminals. The antenna terminal board for the loop antenna connections is designated L-H. The two terminals on the loop are designated L and H; the leads connected to these terminals should be wired to the corresponding terminals (L and H) on the chassis.

ALIGNMENT PROCEDURE

Alignment of this receiver requires the use of an accurately calibrated RF signal generator, range 455 kc. to 107mc., an output meter, and a vacuum tube voltmeter of approximately 10 megohm input impedance. All trimmer condensers can be identified by stampings on the chassis and gang condenser cover and are shown on the chassis layout diagram.

The pointer on the radio dial should line up with the first horizontal mark on the low frequency end of the dial glass. If the pointer does not line up, loosen the screws on the pointer drive pulley at the end of the tuning gang and adjust the pointer setting; tighten the screws after this adjustment. Be sure the gang is fully meshed for this pointer alignment.

©John F. Rider

Compliments of www.nucow.com

AM ALIGNMENT

I-F ALIGNMENT

1. Set range control to position No. 1. Set volume, treble and bass controls to maximum, the Band Switch to Broadcast position, and dial pointer to 1000 kc.

2. Tune the signal generator to EXACTLY 455 kc.

3. Connect output of modulated signal generator to the signal grid of the 6SB7Y (pin 8) through a .01 mfd. capacitor and signal generator ground to radio chassis.

4. All i-f transformers on this chassis are slug-tuned. Both slug adjustments for 455 kc. are located on top of the transformers; the 10.7 mc. adjustments are accessible on the bottom.

5. Connect output meter across voice coil of 15-inch speaker and peak in order the third, second and first i-f transformers.

6. Use only enough signal input to give a readable indication on voltmeter so that the AVC will not operate and give false readings.

ALTERNATE VISUAL ALIGNMENT OF I-F STAGES

1. Connect 455 kc. sweep generator having approximately 40 kc. sweep to signal grid of 6SB7Y (pin 8) through a .01 mfd. capacitor. Connect an oscilloscope through a 1 megohm isolating resistor across the 220,000 ohm diode load resistor. Align for best possible peak with range switch in position No. 1, and symmetry in position No. 4.

BROADCAST BAND R-F ALIGNMENT

1. Connect signal generator through .00025 mfd. capacitor to antenna and ground terminals on antenna terminal strip on rear of chassis. Be sure "Ant-loop" switch on top of the chassis is in the ANT. position. Connect output meter as for AM i-f alignment.

2. Tune signal generator to 1400 kc.

3. Set dial to 1400 kc. and adjust oscillator, r-f and antenna trimmers for maximum indication on meter.

4. Set signal generator to 600 kc. and tune radio to signal. Adjust the 600 kc. padder to maximum output while simultaneously rocking the gang.

5. 1400 kc. calibration should then be checked and re-adjusted if necessary with the 1400 kc. oscillator trimmer.

SHORT WAVE BAND R-F ALIGNMENT

1. Set the Band Switch to Short Wave and replace the .00025 mfd. capacitor in series with the signal generator lead to the antenna terminal, with a 400-ohm resistor.

2. Set the signal generator and the receiver to 15 mc. and adjust the oscillator, r-f and antenna trimmers for maximum indication on the meter. While adjusting the 15 mc. oscillator trimmer, two peaks may be observed; only one is the correct peak for 15 mc. alignment. To obtain the correct peak, screw trimmer in to maximum capacitance, then decrease until the first peak is observed. This is the correct one.

Another method for checking for the correct peak is to tune the receiver to 15.91 mc. with signal generator at 15 mc. and with the output increased. If the 15 mc. oscillator trimmer is properly adjusted, the signal will be received at 15.91 mc. if incorrectly aligned, the signal will be received at 14.09 mc.

FM ALIGNMENT

DISCRIMINATOR ALIGNMENT

1. Tune signal generator to EXACTLY 10.775 mc. and connect to pin 4 of the 6SH7 limiter tube socket through a .01 mfd. capacitor.

2. Connect a DC vacuum tube voltmeter from Pin 4 on 6H6 tube socket to ground through a 1 megohm isolating resistor.

3. Peak both discriminator slugs at 10.775 mc.

4. Retune signal generator to exactly 10.7 mc. and adjust bottom slug for zero volts.

5. The DC voltage at 10.625 mc. should be within 10% of the voltage at 10.775 mc. and of opposite polarity.

Note: If the signal generator is not capable of sufficient output to produce a readable DC voltage, the amplification of the last i-f stage can be used to increase the signal input to the limiter for discriminator alignment. To accomplish this, align the last i-f stage as indicated in "IF Alignment". Then align discriminator as above leaving the signal generator connected to the grid of the 6SG7 2nd i-f tube.

I-F ALIGNMENT

1. Connect high side of signal generator, through a .01 mfd. capacitor and a 1000 ohm resistor in series, to pin 4 of the 6SG7 2nd i-f tube. Connect low side of generator to chassis.

©John F. Rider

Compliments of www.nucow.com

2. Close gang condenser and connect vacuum tube voltmeter across 220,000 ohm limiter grid resistor; (Points "A" to "X" on schematic). Adjust signal generator output until a reading of at least 3 volts is obtained. In order to reduce regeneration caused by the vacuum tube voltmeter leads, a 1-megohm isolating resistor, connected with as short leads as possible to point "A" should be used in series with the vacuum tube voltmeter. Align the 3rd i-f transformer for best peak as indicated on voltmeter.

3. Repeat above for the 2nd and 1st transformer by connecting signal generator to signal grid of first i-f tube 6SG7 then to the signal grid of 6SB7Y converter. The i-f stages should be aligned in this order.

WARNING—After each i-f stage has been individually aligned, do not repeak with the signal into the grid of the 6SB7Y.

ALTERNATE VISUAL ALIGNMENT OF I-F STAGES

1. Replace signal generator with sweep generator having approximately 300 kc. sweep and tune generator to 10.7 mc. Connect oscilloscope across 220,000 ohm limiter grid resistor through a 1-megohm isolating resistor. The order of alignment is the same as when using a vacuum tube voltmeter. Each i-f transformer should be individually aligned for best peak and symmetry.

R-F ALIGNMENT

1. Connect vacuum tube voltmeter across limiter grid resistor as in FM I-F alignment. Adjust signal generator output until a reading of at least 3 volts is obtained.

2. Ground one side of the FM Antenna by placing a wire jumper from one FM connection on the antenna terminal strip to the ground connection.

3. Connect unmodulated signal generator through a 300 ohm resistor to ungrounded antenna post and chassis, and tune signal generator to 107 mc.

4. Set radio dial to 107 mc. and tune oscillator trimmer to peak output on vacuum tube voltmeter.

5. Tune 107 mc. r-f and antenna trimmers for maximum indication on voltmeter—it may be necessary to rock the gang while adjusting the r-f trimmer.

THE NOISE SUPPRESSOR

This chassis incorporates an automatic noise suppressor to reduce scratch and noise from phonograph reproduction.

The noise suppressor functions only when the band control switch is in "Phono" position and is automatically switched out of the circuit when the band control switch is in any position except "Phono"

To turn the noise suppressor on press the noise suppressor button and release so that the white dot on the top side of the knob is visible. To disconnect the noise suppressor from the circuit press the button in and release so that the white dot is no longer visible.

Tube replacements in the noise suppressor circuit will usually necessitate an adjustment of the bias gain control.

ADJUSTMENT

It is recommended that the following equipment be used in making noise suppressor adjustments:

DC vacuum tube voltmeter, 10 megohm or greater input impedance.

Columbia No. 10004 test record.

1. Connect record changer to noise suppressor and noise suppressor to radio chassis. Obtain test signal by playing Columbia No. 10004 test record at 1500 cycles with radio band switch in "Phono" position. Set bias gain control to give −4.0 volts bias measured from pins 4 and 5 on 6SQ7 to ground with DC vacuum tube voltmeter.

2. If the recommended test equipment is not available the noise suppressor can be adjusted to a reasonably accurate degree by a listening test using a 12-inch record having a moderate amount of surface noise. Turn noise suppressor on, range and treble controls to maximum (clockwise) and bias gain control to extreme counter-clockwise position. Then place stylus in outside groove of record with the turn-table running and adjust bias gain control to a point where the surface noise is barely audible. In making this adjustment the stylus should not be permitted to run into the recorded section of the record.

SPECIAL SERVICE INFORMATION

The following information is provided for the service man who has a vacuum tube voltmeter or a similar measuring instrument available.

STAGE GAINS*

Antenna Post to R-F Grid at:

600 kc.	5.8
6.5 mc.	2.9
98 mc.	1.0

R-F Grid to Converter Grid at:

600 kc.	11.6
6.5 mc.	9.5
98 mc.	6.8

R-F on Converter Grid to 455 kc. on I-F Grid at:

600 kc.	1.7
6.5 mc.	2.4
98 mc.	6.8

©John F. Rider

Compliments of www.nucow.com

I-F on Converter Grid to 1st I-F Grid at:
455 kc. (dial pointer at 600 kc.) 2.6

1st I-F Grid to 2nd I-F Grid at:
455 kc. 20.5
10.7 mc. 37

2nd I-F Grid to Limiter Grid at:
10.7 mc. 34.5

AUDIO GAIN

Voltage required across the Volume Control to produce 0.1 watt speaker output** at 400 cycles is:
.013 volt with Amplifier AMP-116A
with Band Switch in BDCST setting.

OSCILLATOR OUTPUT VOLTAGE

The DC voltage developed across the Oscillator Grid Resistor (105) at:
600 kc. ..... 4.5V.
6.5 mc. ..... 4.6V.
98 mc. ..... 5.4V.

or 0.3 ma. through 15,000 ohm Oscillator Grid Resistor at 600 kc., 0.31 ma. at 6.5 mc. and 0.36 ma. at 98 mc.

*Variations of ±20% are permissible. All AM readings made with sufficient input signal to provide 0.5 watt speaker output. 0.5 watt speaker output at 400 cycles is equivalent to a reading of 2.75V. as measured by a high resistance AC voltmeter across the voice coil of the 15-inch speaker.

**0.1 watt speaker output at 400 cycles is equivalent to a reading of 1.22 volts as measured by a high resistance AC voltmeter across the voice coil of 15-inch speaker.

10 KC. FILTER ADJUSTMENT

This chassis incorporates a 10 kc. filter circuit to eliminate the beat note heard as a whistle between stations on the broadcast band. If the trimmer is out of adjustment the following procedure should be observed:

1. Adjust the range control switch to the No. 3 setting.

2. Remove the noise suppressor plug from the radio chassis and connect the output of an audio oscillator to the phonograph pickup socket. Adjust the oscillator to exactly 10,000 cycles.

3. Set the band selector to PHONO and adjust the 10 kc. trimmer for minimum output.

4. If an audio oscillator is not available for making this adjustment set the band selector to BDCST, set the range control to position 4, connect the antenna to the receiver and set the gang condenser to a point between two stations on adjacent channels having approximately the same power. If the 10 kc. trimmer is out of adjustment, a whistle will be heard. Adjust the trimmer until the whistle is eliminated.

DIAL CORD REPLACEMENT

Rotate the brass pulley designated "A" in Figure 1 until the dial pointer strikes the stop at the high frequency end of the dial calibration. In this condition the slot in pulley "A" should be approximately ten degrees to the left of being vertical—see Figure 1. If the slot in the pulley is in some other position under the above mentioned conditions, the pointer set screw is probably loose and has allowed the pointer to slip.

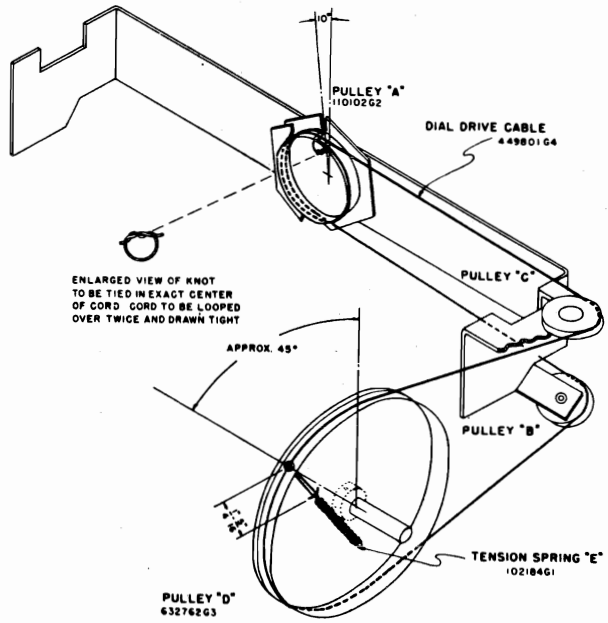

FIGURE 1

To correct this condition, first remove the glass dial and loosen the pointer screw. Then while holding pulley "A" so that its slot is approximately ten degrees to the left of vertical (when viewed from the rear) adjust the pointer until it is resting against the stop at the high frequency end of its travel. Then tighten the pointer set screw securely and replace the glass dial.

Completely unmesh the condenser gang and check the location of the hole or slot in pulley "D". If this hole is not approximately 45 degrees back from vertical as shown on Figure 1, loosen the two No. 6 Allen set screws in the hub of pulley "D" and slip the pulley on its shaft (while holding the condenser gang unmeshed) until the specified adjustment is obtained; then tighten one of the set screws securely. It will be shown later that this is a temporary setting. Next, tie a double knot in the exact center of a 25-inch length of dial cable and fold the cable back on itself so that the knot is at one end. The correct method for tying this knot is shown as an inset on Figure 1. Grasp the cable near the knotted end and slide it into the pulley slot so that the knot is against

©John F. Rider

Compliments of www.nucow.com

MODEL CR-213

the inside rim of the pulley as shown in the sketch. The piece of cable nearest the dial frame should be wound in the direction shown for one-half turn; then over the lower pulley "B", around the bottom of the large pulley "D" and into the hole. Pull the cable taut and wrap the end around the small hook on pulley "D" temporarily.

The remaining piece of cable should be wound around pulley "A" in the direction shown, for one complete turn, over the upper pulley "C", and over the top of pulley "D". Thread the end through the small hole in pulley "D" and pull both ends of the cable taut. With one end of tension spring "E" fastened to the hook on pulley "D" lace the two free ends of the cable through the opposite end of the spring and tie a knot at a point that will allow 1/4" to 5/16" of cable between the spring and the inside rim of pulley "D". Be sure to tie the knot around one coil of the spring in the manner shown.

Now with the condenser gang completely meshed, check the position of the dial pointer. If it is not in line with the last calibration mark at the low frequency end of the dial, loosen the set screw in pulley "D" and turn it until the pointer is in the specified position. Be sure that the condenser gang does not move during this adjustment. Then tighten the two screws in pulley "D" securely completing the operation.

CONDENSER GANG DRIVE ADJUSTMENTS

Whenever any of the mechanical parts in the condenser gang drive assembly require replacement due to rough handling or for any other reason, it is extremely important that clearances and adjustments shown on Figures 2 and 3 are correct; otherwise, the tuning mechanism will be sluggish or it may slip during operation.

In reassembling the mechanism after any part was replaced, follow the procedure outlined below:

1. Assemble the Tuning Shaft, Drive Collar, Compression Spring and Flywheel in the order shown on Figure 3. The distance between the front of the Drive Collar and the front of the Tuning Shaft must be 1 1/8 inches as specified on Figure 2. Install the Flywheel on the rear of the Tuning Shaft and slide it forward until it nearly touches the edge of the Drive Wheel; then tighten one of the set screws in the Flywheel hub. Insert a .010" gauge between the Flywheel and the Pin, and while holding the gauge in this position, loosen the set screw in the Flywheel hub that was previously tightened. The Compression Spring should force the Flywheel back against the gauge—when this occurs, tighten both set screws in the Flywheel hub.

2. Adjust the Muting Switch contact clearance by loosening the two screws in the Contact Bracket and

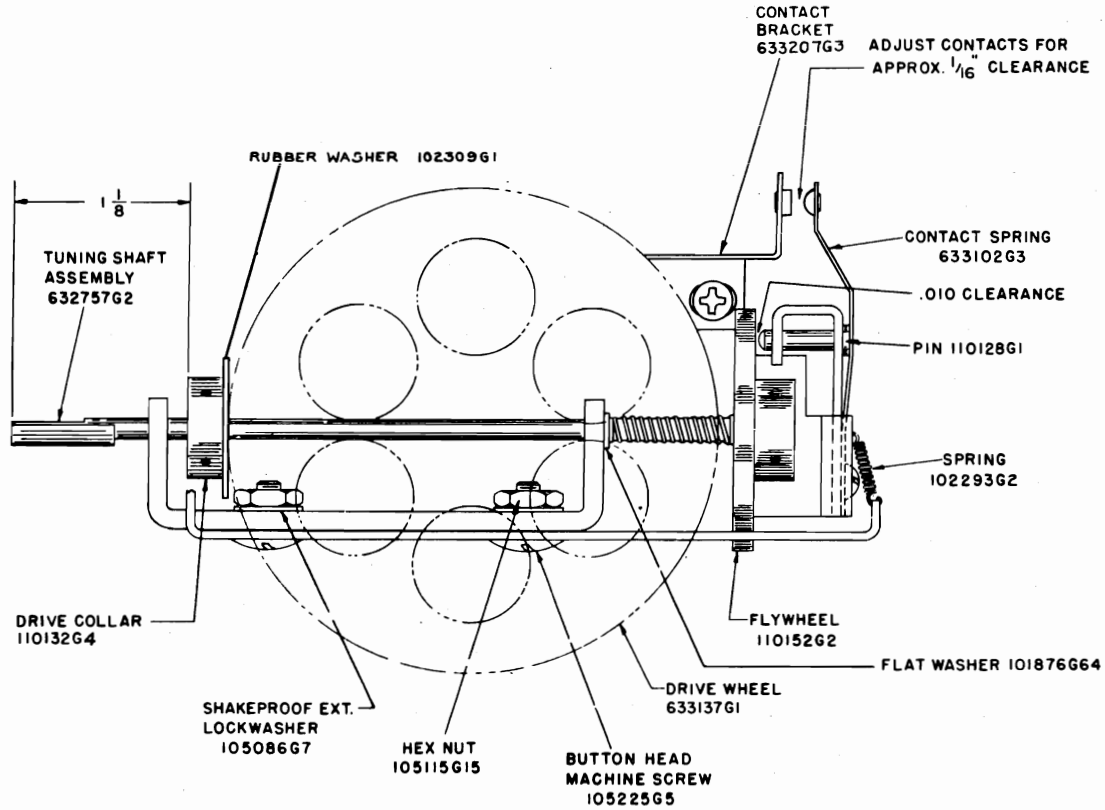

FIGURE 2

©John F. Rider

Compliments of www.nucow.com

sliding the bracket in the required direction until a 1/16" clearance is obtained. If this adjustment cannot be obtained in the manner prescribed, bend the Contact Bracket until proper clearance is realized.

3. The Drive Wheel is properly located on its shaft when its edge nearest the hub is in line with the outside edge of the Drive Collar as shown on Figure 3. Two Allen set screws in the Drive Wheel hub provide a means of adjusting the position of this wheel.

4. When the adjustment outlined in paragraph 2 is correct, the proper contact clearance will automatically be obtained when the Muting Switch is to be "unmuted" while the push buttons are being set. While pressure is applied to any one of the push buttons while they are being set up, a pressure applied simultaneously to the Tuning Control knob will cause the Muting Switch contacts to open. Detailed instructions on setting up these push buttons are shown elsewhere in this bulletin.

5. If the push button shafts at both ends do not engage the Treadle Bar as shown on Figure 3, the three screws in the Treadle Bar must be loosened and the Treadle Bar should be moved until the required condition is obtained.

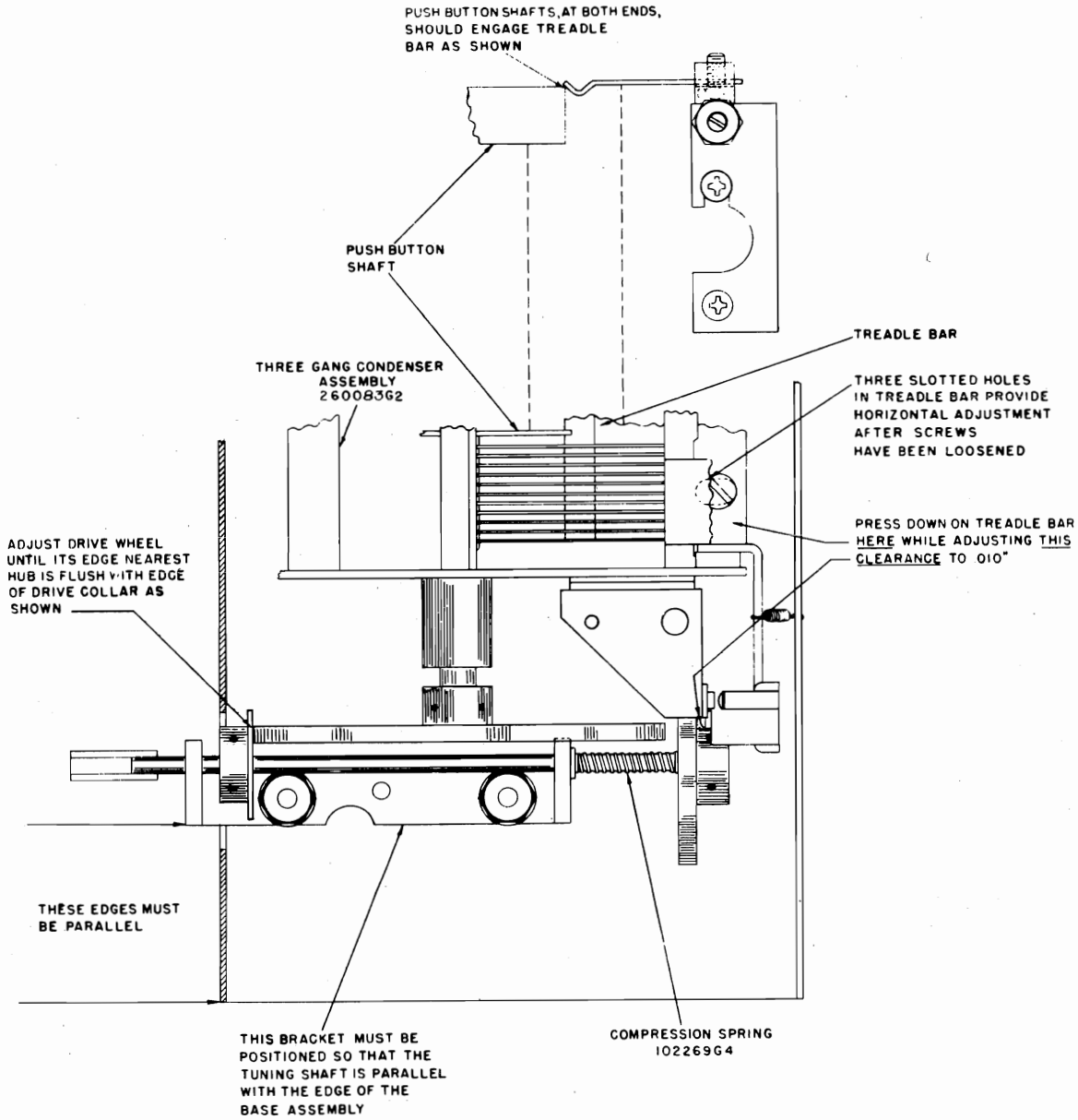

FIGURE 3

©John F. Rider

Compliments of www.nucow.com

MODEL CR-213

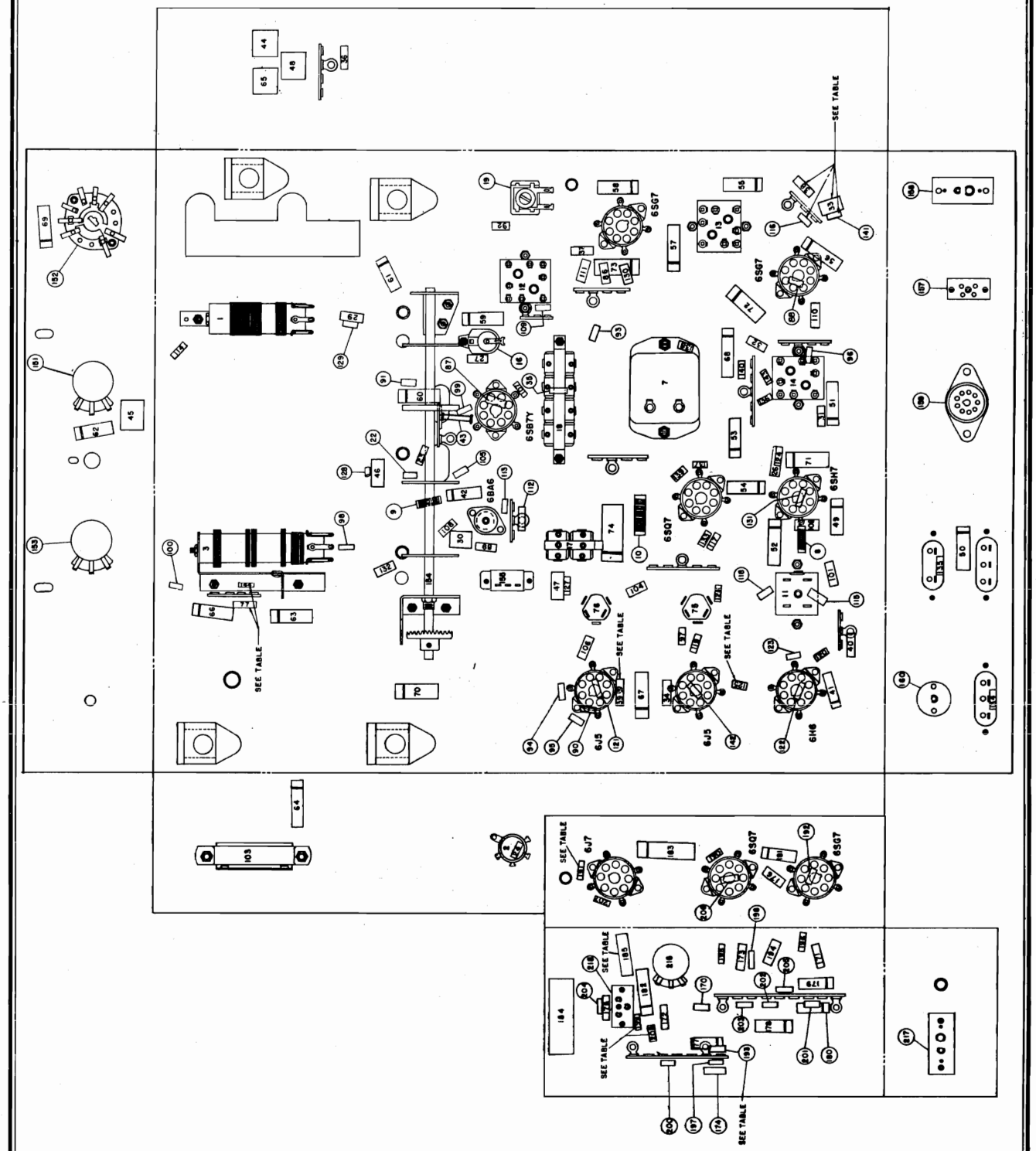

©John F. Rider

Compliments of www.nucow.com

MODEL CR-213

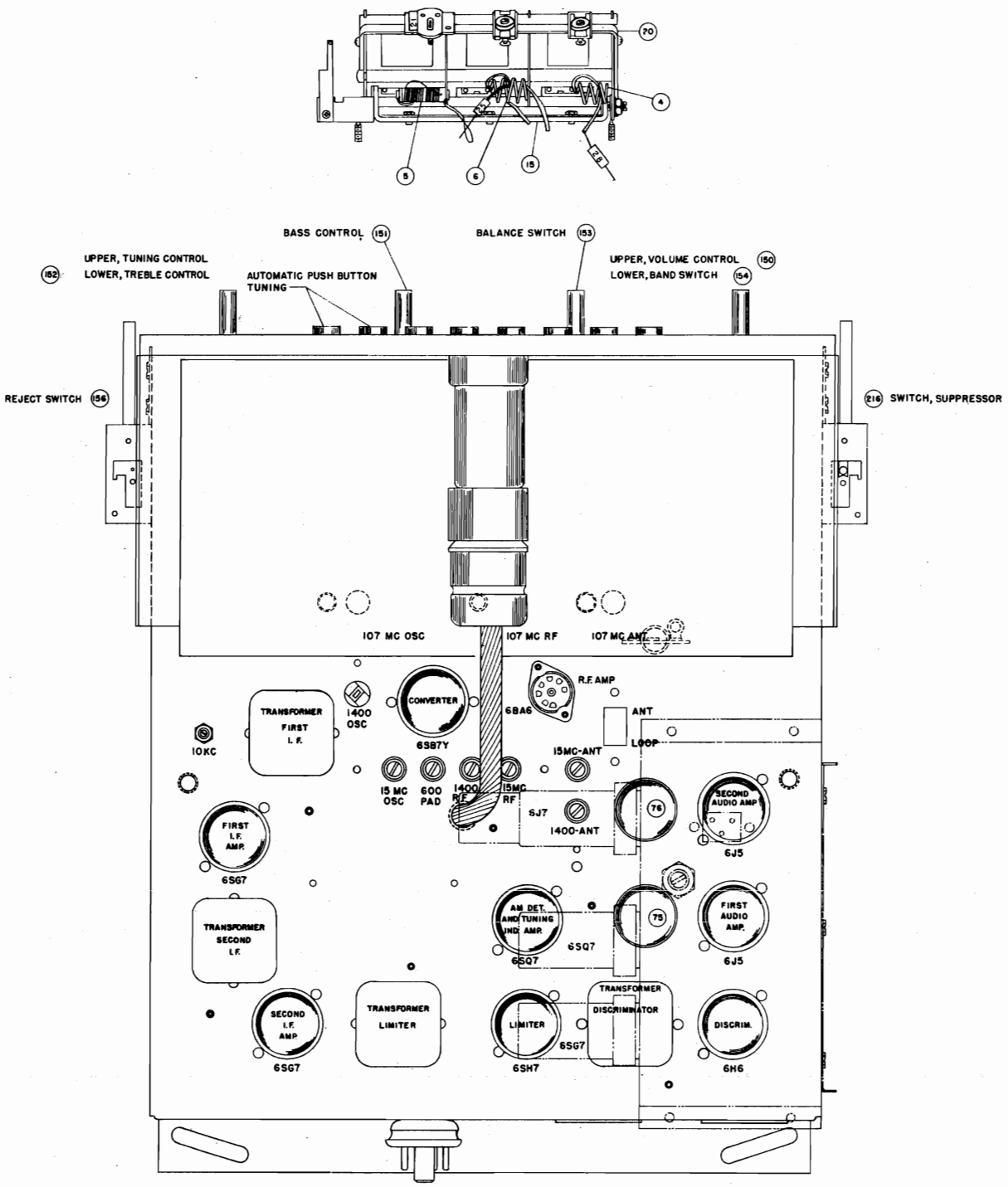

ITEM NO.	ELECTRICAL VALUES CR213A	CR213B	
33	330 MMF	OMIT	
38	510 MMF	OMIT	
39	510 MMF	OMIT	
77	OMIT	1500 MMF	
116	82K	OMIT	
125	220K	470K	
141	3.3 MEG.	OMIT	
144	OMIT	33K	

ITEM NO.	ELECTRICAL VALUES CR213A	CR213B	
185	OMIT	.1 MFD	
191	5600	1000	
193	68K	22K	
199	330K	47K	
208	OMIT	120K	

FIGURE 4

©John F. Rider

Compliments of www.nucow.com

REFERENCE NO.	DESCRIPTION	MAGNAVOX PART NO.
1	Coil Assembly, Oscillator (AM)	360298G1
2	Coil Assembly, Antenna (AM)	360299G1
3	Coil Assembly, R.F. (AM)	360300G1
4	Coil Assembly, Antenna (FM)	360296G3
5	Coil Assembly, Oscillator (FM)	360295G1
6	Coil Assembly, R.F. (FM)	360297G4
7	Coil Assembly, 10 K.C.	360244G1
8	Choke Coil	360284G1
9	Choke Coil	360284G1
10	Choke Coil, Filament	360264G1
11	Transformer (Discriminator)	360305G1
12	Transformer, I.F.	360285G1
13	Transformer, I.F.	360285G1
14	Transformer, Limiter	360286G1
15	Capacitor, Variable, Three Gang Tuning	260075G1
16	Capacitor, Variable, Oscillator Trimmer (Broadcast)	260067G4
17	Capacitor, Variable, 2 Trimmer	260080G1
18	Capacitor, Variable, 4 Trimmer and Oscillator Padder	260082G1
19	Capacitor, Variable, 10 K.C. Trimmer	259610G2
20	Capacitor, Trimmer Assembly	260084G1
21	Capacitor, Ceramic, 3 mmf.	250088G38
22	Capacitor, Ceramic & Composition, 6 mmf.	250164G2
23	Capacitor, Ceramic & Composition, 10 mmf.	250164G3
24	Capacitor, Ceramic & Composition, 10 mmf.	250164G3
25	Capacitor, Ceramic, 35 mmf.	250088G40
26	Capacitor, Mica, 47 mmf.	250159G96
27	Capacitor, Ceramic, 50 mmf.	250088G39
28	Capacitor, Ceramic, 50 mmf.	250088G39
29	Capacitor, Mica, 100 mmf.	250159G98
30	Capacitor, Mica, 100 mmf.	250159G98
31	Capacitor, Mica, 220 mmf.	250159G100
32	Capacitor, Mica, 220 mmf.	250159G100
33	Capacitor, Mica, 330 mmf., ± 10%, (Used on 213A Only)	250159G88
34	Capacitor, Mica, 330 mmf.	250159G101
35	Capacitor, Silver Mica, 335 mmf., ± 1%	250085G38
36	Capacitor, Mica, 470 mmf.	250159G102
37	Capacitor, Mica, 470 mmf.	250159G102
38	Capacitor, Mica, 510 mmf., ± 5%, (Used on 213A Only)	250159G64
39	Capacitor, Mica, 510 mmf., ± 5%, (Used on 213A Only)	250159G64
40	Capacitor, Mica, 820 mmf., ± 10%	250159G132
41	Capacitor, Paper, .0012 mfd., ± 10%, 600 V.	250169G12
42	Capacitor, Paper, .002 mfd., 600 V.	250152G44
43	Capacitor, Ceramic, .004 mfd.	250088G34
44	Capacitor, Molded Paper, .004 mfd., 600 V.	250129G7
45	Capacitor, Molded Paper, .005 mfd., 400 V.	250129G10
46	Capacitor, Mica, .0062 mfd., ± 5%	250161G27
47	Capacitor, Mica, .0062 mfd., ± 5%	250161G27
48	Capacitor, Molded Paper, .008 mfd., 400 V.	250129G11
49	Capacitor, Paper, .01 mfd., 400 V.	250152G27
50	Capacitor, Paper, .01 mfd., 400 V.	250152G27
51	Capacitor, Paper, .01 mfd., 400 V.	250152G27
52	Capacitor, Paper, .01 mfd., 400 V.	250152G27
53	Capacitor, Paper, .01 mfd., 400 V.	250152G27
54	Capacitor, Paper, .01 mfd., 400 V.	250152G27
55	Capacitor, Paper, .01 mfd., 400 V.	250152G27
56	Capacitor, Paper, .01 mfd., 400 V.	250152G27
57	Capacitor, Paper, .01 mfd., 400 V.	250152G27
58	Capacitor, Paper, .01 mfd., 400 V.	250152G27
59	Capacitor, Paper, .01 mfd., 400 V.	250152G27
60	Capacitor, Paper, .01 mfd., 400 V.	250152G27
61	Capacitor, Paper, .01 mfd., 400 V.	250152G27
62	Capacitor, Paper, .01 mfd., 400 V.	250152G27
63	Capacitor, Paper, .01 mfd., 400 V.	250152G27
64	Capacitor, Paper, .01 mfd., 400 V.	250152G27
65	Capacitor, Molded Paper, .012 mfd., 200 V.	250129G13
66	Capacitor, Paper, .015 mfd., ± 10%, 200 V.	250169G5
67	Capacitor, Paper, .02 mfd., 400 V.	250152G26
68	Capacitor, Paper, .02 mfd., 400 V.	250152G26
69	Capacitor, Paper, .02 mfd., 400 V.	250152G26
70	Capacitor, Paper, .05 mfd., 200 V.	250152G15
71	Capacitor, Paper, .05 mfd., 200 V.	250152G15
72	Capacitor, Paper, .05 mfd., 200 V.	250152G15
73	Capacitor, Paper, .05 mfd., 200 V.	250152G15
74	Capacitor, Paper, .1 mfd., 400 V.	250152G22
75	Capacitor, Electrolytic, 10 mfd., 450 V. 20 mfd., 25 V.	270023G6
76	Capacitor, Electrolytic, 10 mfd., 450 V. 20 mfd., 25 V.	270023G6
77	Capacitor, Mica, mmf., ± 10%, 500 V., (Used on 213B Only)	250160G66
86	Resistor, Composition, 33 Ohms, ½ W.	230084G4
87	Resistor, Composition, 33 Ohms, ½ W.	230084G4
88	Resistor, Composition, 68 Ohms, ½ W.	230084G6
89	Resistor, Composition, 68 Ohms, ½ W.	230084G6
90	Resistor, Composition, 100 Ohms, ½ W., ± 10%	230084G50
91	Resistor, Composition, 100 Ohms, ½ W.	230084G7
92	Resistor, Composition, 150 Ohms, ½ W.	230084G8
93	Resistor, Composition, 220 Ohms, ½ W.	230084G9
94	Resistor, Composition, 220 Ohms, ½ W., ± 10%	230084G54
95	Resistor, Composition, 470 Ohms, ½ W.	230084G11
96	Resistor, Composition, 1000 Ohms, ½ W.	230084G13
97	Resistor, Composition, 2200 Ohms, ½ W.	230084G15
98	Resistor, Composition, 4700 Ohms, ½ W.	230084G17
99	Resistor, Composition, 5600 Ohms, ½ W., ± 10%	230084G71
100	Resistor, Composition, 5600 Ohms, ½ W., ± 10%	230084G71
101	Resistor, Composition, 8200 Ohms, 1 W., ± 10%	230085G73
102	Resistor, Composition, 8200 Ohms, 1 W., ± 10%	230085G73
103	Resistor, Strip, 8500 Ohms	240035G5
104	Resistor, Composition, 10,000 Ohms, 1 W.	230085G19
105	Resistor, Composition, 10,000 Ohms, ½ W.	230084G19
106	Resistor, Composition, 15,000 Ohms, 1 W.	230085G20
107	Resistor, Composition, 15,000 Ohms, ½ W.	230084G20
108	Resistor, Composition, 20,000 Ohms, 1 W., ± 5%	230085G190
109	Resistor, Composition, 22,000 Ohms, ½ W.	230084G21
110	Resistor, Composition, 33,000 Ohms, 1 W.	230085G22
111	Resistor, Composition, 33,000 Ohms, 1 W.	230085G22
112	Resistor, Composition, 33,000 Ohms, 2 W., ± 10%	230086G80
113	Resistor, Composition, 39,000 Ohms, ½ W., ± 10%	230084G81
114	Resistor, Composition, 47,000 Ohms, ½ W.	230084G23
115	Resistor, Composition, 68,000 Ohms, ½ W., ± 10%	230084G84
116	Resistor, Composition, 82,000 Ohms, ½ W., ± 10%, (Used on 213A Only)	230084G85
117	Resistor, Composition, 100,000 Ohms, ½ W.	230084G25
118	Resistor, Composition, 100,000 Ohms, ½ W.	230084G25
119	Resistor, Composition, 100,000 Ohms, ½ W.	230084G25
120	Resistor, Composition, 100,000 Ohms, ½ W., ± 10%	230084G86
121	Resistor, Composition, 150,000 Ohms, ½ W.	230084G26
122	Resistor, Composition, 150,000 Ohms, ½ W., ± 10%	230084G88
123	Resistor, Composition, 150,000 Ohms, ½ W., ± 10%	230084G88
124	Resistor, Composition, 220,000 Ohms, ½ W.	230084G27
125	Resistor, Composition, 220,000 Ohms, ½ W., (Used on 213A Only)	230084G27
	Resistor, Composition, 470,000 Ohms, ½ W., ± 10%, (Used on 213B Only)	230084G94
126	Resistor, Composition, 220,000 Ohms, ½ W.	230084G27
127	Resistor, Composition, 220,000 Ohms, ½ W.	230084G27
128	Resistor, Composition, 220,000 Ohms, ½ W.	230084G27
129	Resistor, Composition, 220,000 Ohms, ½ W.	230084G27
130	Resistor, Composition, 470,000 Ohms, ½ W.	230084G29
131	Resistor, Composition, 470,000 Ohms, ½ W.	230084G29
132	Resistor, Composition, 470,000 Ohms, ½ W.	230084G29
133	Resistor, Composition, 470,000 Ohms, ½ W.	230084G29
134	Resistor, Composition, 1 Megohm, ½ W.	230084G31
135	Resistor, Composition, 1 Megohm, ½ W.	230084G31
136	Resistor, Composition, 1 Megohm, ½ W.	230084G31
137	Resistor, Composition, 1.5 Megohm, ½ W.	230084G32
138	Resistor, Composition, 1.5 Megohm, ½ W.	230084G32
139	Resistor, Composition, 2.2 Megohm, ½ W.	230084G33
140	Resistor, Composition, 2.2 Megohm, ½ W.	230084G33
141	Resistor, Composition, 3.3 Megohm, ½ W., ± 10%, (Used on 213A Only)	230084G104
142	Resistor, Composition, 4.7 Megohm, ½ W.	230084G35
143	Resistor, Composition, 4.7 Megohm, ½ W.	230084G35
144	Resistor, Composition, 33,000 Ohms, ½ W., ± 10%, (Used on 213B Only)	230084G80
150	Control, Volume, 1 Megohm	220044G24
151	Control, Bass, 1 Megohm, with Switch	220073G6
152	Control, Treble	160178G1
153	Switch, Balance	220044G26
154	Switch, Rotary Band Switch	160179G1
155	Switch, Slide SPDT	160176G1
156	Switch, Reject	160188G1
157	Socket, External Input	180060G1
158	Socket, Phono.	189741G1
159	Socket, Amplifier	180427G2
160	Socket, Solenoid	182776G1
161	Antenna Loop Assembly *The part number of the loop antenna assembly changes with different Cabinets. It is therefore important that you specify the STYLE NUMBER of the instrument when ordering a replacement loop antenna assembly.	
162	Solenoid	360313G1
163	Plug, Solenoid	189147G1
	Dial Glass Assembly	150303G1
	Push Button Assembly for Gang	260093G1

NOISE SUPPRESSOR—AMP 119A & B

170	Capacitor, Ceramic & Composition, 6 mmf., ± 1 mmf., 500 V.	250164G2
171	Capacitor, Mica, 47 mmf., 500 V.	250159G96
172	Capacitor, Mica, 82 mmf., ± 10%, 500 V.	250159G81
173	Capacitor, Mica, 120 mmf., ± 10%, 500 V.	250159G83
174	Capacitor, Mica, 150 mmf., ± 10%, 500 V.	250159G84
175	Capacitor, Mica, 330 mmf., 500 V.	250159G101
176	Capacitor, Ceramic, 590 mmf.	250088G41
177	Capacitor, Paper, .001 mfd., ± 10%, 600 V.	250169G11
178	Capacitor, Paper, .003 mfd., ± 10%, 600 V.	250169G6
179	Capacitor, Paper, .005 mfd., 400 V.	250152G30
180	Capacitor, Paper, .005 mfd., 400 V.	250152G30
181	Capacitor, Paper, .01 mfd., 200 V.	250152G18
182	Capacitor, Paper, .05 mfd., 200 V.	250152G15
183	Capacitor, Paper, .1 mfd., 200 V.	250152G13
184	Capacitor, Electrolytic, 20 mfd., 25 V.	270027G2
185	Capacitor, Paper, .1 mfd., 400 V., (Used on Amp. 119B Only)	250152G22
190	Resistor, Composition, 3300 Ohms, ½ W.	230084G16
191	Resistor, Composition, 5600 Ohms, ½ W., ± 10%, (Used on 119A Only)	230084G71
	Resistor, Composition, 1000 Ohms, ½ W., (Used on 119B Only)	230084G13
192	Resistor, Composition, 8200 Ohms, ½ W., ± 10%	230084G73
193	Resistor, Composition, 68,000 Ohms, ½ W., ± 10%, (Used on 119A Only)	230084G84
	Resistor, Composition, 22,000 Ohms, ½ W., ± 10%, (Used on 119B Only)	230084G78
194	Resistor, Composition, 100,000 Ohms, 1 W., ± 10%	230085G86
195	Resistor, Composition, 100,000 Ohms, ½ W.	230084G25
196	Resistor, Composition, 100,000 Ohms, ½ W., ± 10%	230084G86
197	Resistor, Composition, 220,000 Ohms, ½ W., ± 10%	230084G90
198	Resistor, Composition, 220,000 Ohms, ½ W.	230084G27
199	Resistor, Composition, 330,000 Ohms, ½ W., (Used on 119A Only)	230084G28
	Resistor, Composition, 47,000 Ohms, ½ W., ± 10%, (Used on 119B Only)	230084G82
200	Resistor, Composition, 330,000 Ohms, ½ W.	230084G28
201	Resistor, Composition, 470,000 Ohms, ½ W.	230084G29
202	Resistor, Composition, 470,000 Ohms, ½ W.	230084G29
203	Resistor, Composition, 470,000 Ohms, ½ W.	230084G29
204	Resistor, Composition, 1 Megohm, ½ W.	230084G31
205	Resistor, Composition 1 Megohm, ½ W.	230084G31
206	Resistor, Composition, 1 Megohm, ½ W.	230084G31
207	Resistor, Composition, 2.7 Megohm, ½ W., ± 10%	230084G103
208	Resistor, Composition, 120,000 Ohms, ½ W., ± 10%, (Used on 119B Only)	230084G87
215	Potentiometer, Control Channel Gain	220072G11
216	Switch	160187G1
217	Socket, Phono. Input	189741G1
218	Socket, Switch	180139G4
219	Plug, Switch	180311G9
220	Plug, Phono.	180311G1

©John F. Rider

Compliments of www.nucow.com

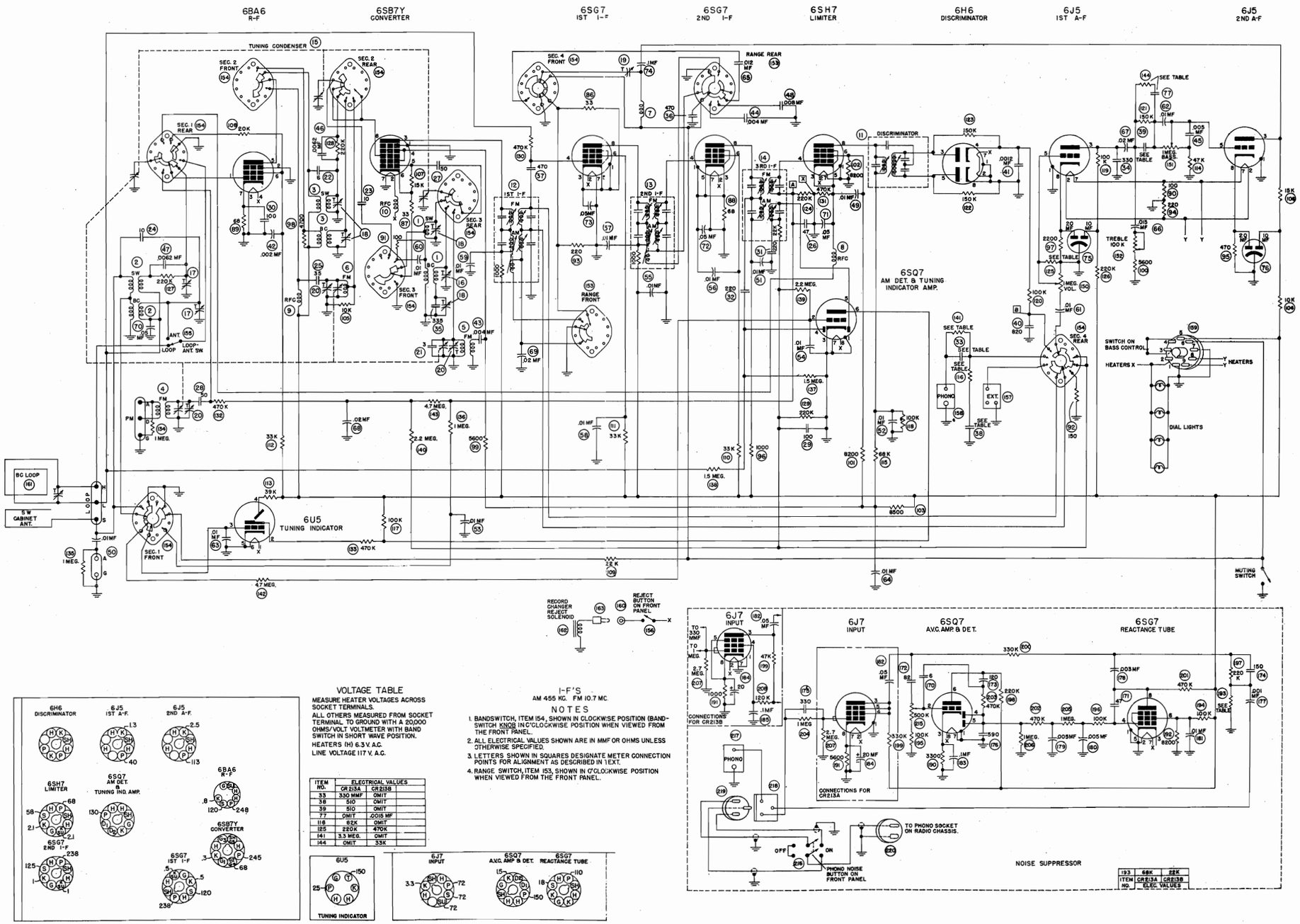

VOLTAGE TABLE

MEASURE HEATER VOLTAGES ACROSS SOCKET TERMINALS.
ALL OTHERS MEASURED FROM SOCKET TERMINAL TO GROUND WITH A 20,000 OHMS/VOLT VOLTMETER WITH BAND SWITCH IN SHORT WAVE POSITION.
HEATERS (H) 6.3 V. A.C.
LINE VOLTAGE 117 V. A.C.

ITEM NO.	ELECTRICAL VALUES CR 213A	CR 213B
33	330 MMF	OMIT
38	510	OMIT
39	510	OMIT
77	OMIT	.0015 MF
116	82K	OMIT
125	220K	470K
141	3.3 MEG.	OMIT
144	OMIT	33K

I-F'S

AM 455 KC. FM 10.7 MC.

NOTES

1. BANDSWITCH, ITEM 154, SHOWN IN CLOCKWISE POSITION (BANDSWITCH KNOB IN C'LOCKWISE POSITION WHEN VIEWED FROM THE FRONT PANEL.
2. ALL ELECTRICAL VALUES SHOWN ARE IN MMF OR OHMS UNLESS OTHERWISE SPECIFIED.
3. LETTERS SHOWN IN SQUARES DESIGNATE METER CONNECTION POINTS FOR ALIGNMENT AS DESCRIBED IN TEXT.
4. RANGE SWITCH, ITEM 153, SHOWN IN C'LOCKWISE POSITION WHEN VIEWED FROM THE FRONT PANEL.

FIGURE 5

©John F. Rider

Compliments of www.nucow.com

MODEL CR-226

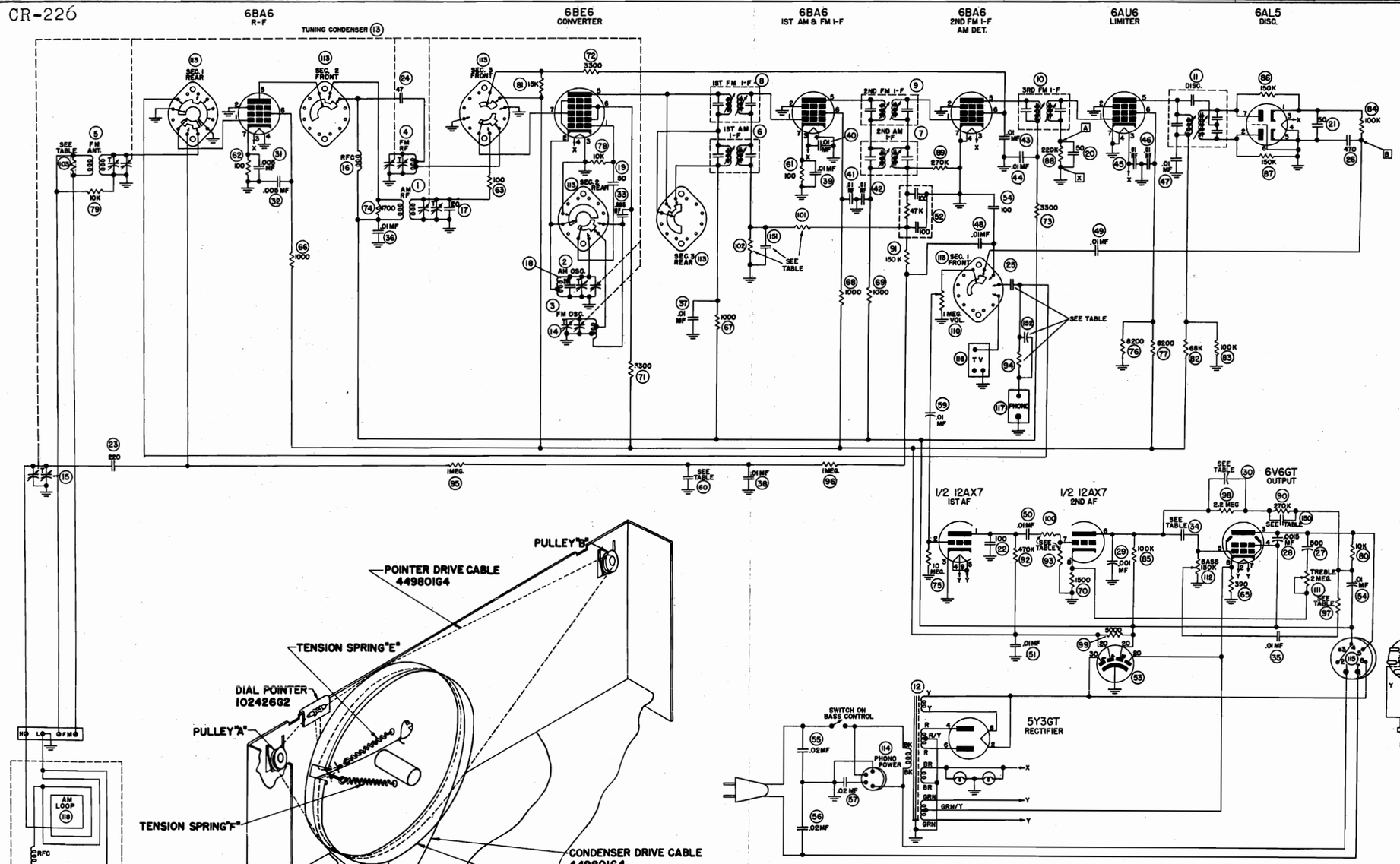

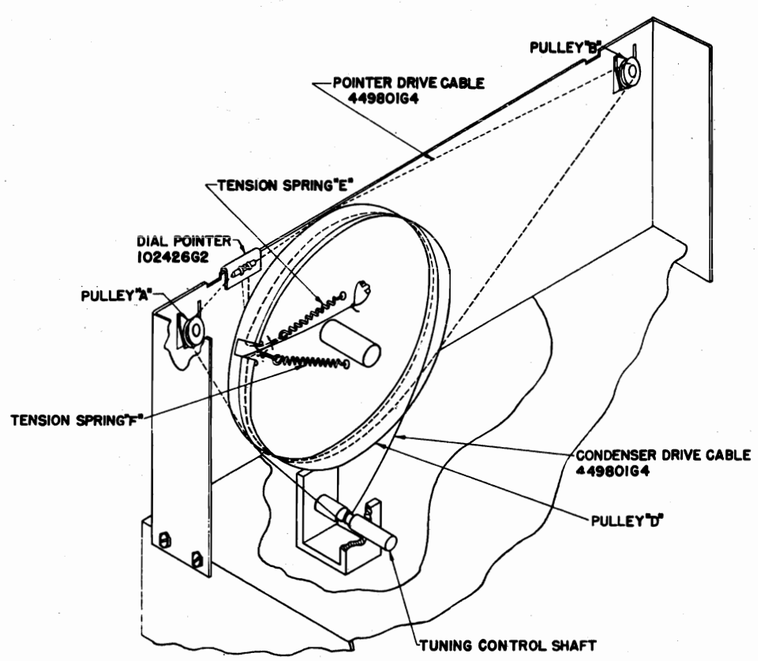

FIGURE 1

FIGURE 2

I-F'S

FM 10.7 MC AM 455KC

NOTES

BAND SWITCH SHOWN IN C'CLOCKWISE (FM) POSITION WHEN VIEWED FROM THE FRONT PANEL.

ALL ELECTRICAL VALUES SHOWN ARE IN MMF OR OHMS UNLESS OTHERWISE SPECIFIED.

LETTERS SHOWN IN SQUARES DESIGNATE METER CONNECTION POINTS FOR ALIGNMENT DESCRIBED IN TEXT.

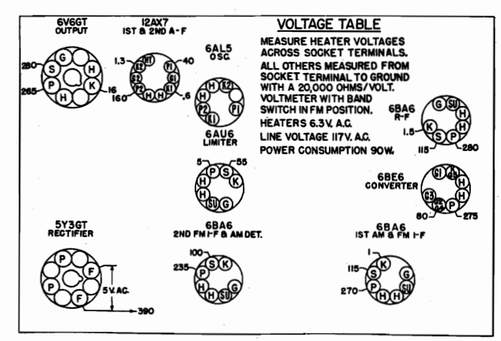

© John F. Rider

Compliments of www.nucow.com

SPECIFICATIONS

MODEL CR-226

2nd I-F (FM), Detector and AVC (AM)	6BA6
Limiter	6AU6
Discriminator	6AL5
First and Second Audio	12AX7
Power output	6V6GT
Rectifier	5Y3GT
Dial Lamps	Mazda No. 44
Speaker:	
Field coil resistance	1000 ohms
Voice coil impedance (400 cycles)	3.0 ohms
Output transformer	6500/3 ohms

Power supply	117 volts 50/60 cycles AC
Power consumption	85 watts
Power output	6 watts
Intermediate frequency	455 kc./10.7 mc.
Tuning frequency range:	
Broadcast Band	540-1620 kc.
FM Band	88 - 108 mc.
Tubes:	
R-F Amplifier	6BA6
Converter	6BE6
1st I-F Amplifier (AM-FM)	6BA6

METHOD FOR REMOVING CHASSIS FROM CABINET

Model CR-226 radio chassis is designed for easy removal from the cabinet in which it is installed. As the radio panel is not fastened to the chassis, the control knobs must be removed when the chassis is taken out of the cabinet for service.

To remove the chassis, first remove the loop leads from their terminals and all plugs from the receptacles on the rear of the chassis. Then remove the four screws securing the chassis and lift it from the cabinet. To replace chassis in cabinet, line up mounting holes and replace mounting screws. Replace all plugs in their receptacles and the loop leads on their correct terminals. The antenna terminal board for the loop antenna connections is designated L-H. The two terminals on the loop are designated L and H; the leads connected to these terminals should be wired to the corresponding terminals (L and H) on the chassis.

ALIGNMENT PROCEDURE

Alignment of this receiver requires the use of an accurately calibrated RF signal generator, range 455 kc. to 107 mc., an output meter, and a vacuum tube voltmeter of greater than 10 megohm input impedance. All trimmer condensers can be identified by stampings on the chassis and gang condenser cover and are shown on the chassis layout diagram. The pointer on the radio dial should line up with the first vertical mark on the low frequency end of the dial glass. If the pointer does not line up, loosen the pointer on the dial string and move it to correct position. Re-tighten and re-cement the pointer to the string. Be sure the gang is fully meshed for this pointer alignment. Align AM first. The oscillator frequency is higher than the carrier on the broadcast band, and lower than the carrier on FM.

AM ALIGNMENT

I-F ALIGNMENT

1. Set volume, treble, and bass controls to maximum. Set Band Switch to Broadcast position, and dial pointer to 1000 kc.
2. Tune the signal generator to EXACTLY 455 kc.
3. Connect output of modulated signal generator to the signal grid of the 6BE6 (pin 7) through a .01 mfd. capacitor and signal generator ground to radio chassis.
4. AM and FM i-f transformers on this model are separate and can be identified on the chassis layout diagram Figure 3.
5. Connect output meter across voice coil of speaker and adjust the i-f transformers for peak output as indicated on the output meter.

ALTERNATE VISUAL ALIGNMENT OF I-F STAGES

1. Connect 455 kc. sweep generator having approximately 20 kc. sweep to signal grid of 6BE6 (pin 7) through a .01 mfd. capacitor. Connect an oscilloscope through a 1 megohm isolating resistor across the 150,000 ohm diode load resistor. Align for best possible peak and symmetry.

R-F ALIGNMENT

1. Remove the signal generator lead from the 6BE6 grid and connect it across H and L on terminal strip on the rear of the chassis. The high side of the signal generator should be connected to H and the signal generator ground to L.

©John F. Rider

Compliments of www.nucow.com

MODEL CR-226

2. Check the tuning dial pointer adjustment. When the plates of the tuning condenser are completely meshed, the dial pointer must be in line with the last calibration mark at the low frequency end of the dial. If it is not, slide the pointer on its string to the correct position. Be sure to crimp the lugs (on the rear of the pointer) tightly around the string to hold the pointer in adjustment.

3. Set the signal generator and the radio receiver to 1400 kc., adjust the 1400 kc. oscillator trimmer and the 1400 kc. r-f trimmer for maximum output.

4. Set the signal generator and radio receiver to 600 kc. Adjust the oscillator and r-f coil slugs for maximum output. If considerable adjustment was necessary re-check the 1400 kc. trimmer settings.

5. Replace chassis in cabinet and connect loop antenna leads to proper terminals on the rear of the chassis.

6. Form three turns of wire into a loop, connect this loop to the signal generator and loosely couple it to the receiver loop antenna.

7. With the signal generator and dial at 1400 kc., adjust the loop antenna trimmer for maximum output.

FM ALIGNMENT

DISCRIMINATOR ALIGNMENT

1. Tune signal generator to EXACTLY 10.775 mc. and connect to pin 1 of the 6AU6 Limiter tube socket through a .01 mfd. capacitor.

2. Connect a DC vacuum tube voltmeter between point "B" on schematic diagram, and ground (across .00047 mfd. capacitor—Pin 1 on 6AL5 to ground).

3. Peak both discriminator slugs at 10.775 mc.

4. Retune signal generator to exactly 10.7 mc. and adjust bottom slug for zero volts.

5. The DC voltage at 10.625 mc. should be within 10% of the voltage at 10.775 mc. and of opposite polarity.

Note: If the signal generator is not capable of sufficient output to produce a readable DC voltage, the amplification of the last i-f stage can be used to increase the signal input to the limiter for discriminator alignment. To accomplish this, align the last i-f stage as indicated in "IF Alignment". Then align discriminator as above leaving the signal generator connected to the grid of the 6BA6 2nd i-f tube.

I-F ALIGNMENT

1. Connect high side of signal generator, through a .01 mfd. capacitor and a 1000 ohm resistor in series, to pin 1 of the 6BA6 2nd i-f tube. Connect low side of generator to chassis.

2. Close gang condenser and connect vacuum tube voltmeter across 220,000 ohm limiter grid resistor; (Point "A" on schematic to ground). Adjust signal generator output until a reading of approximately 3 volts is obtained. In order to reduce regeneration caused by the vacuum tube voltmeter leads, a 1-megohm isolating resistor, connected with as short leads as possible to point "A" should be used in series with the vacuum tube voltmeter. Align the 3rd i-f transformer for best peak as indicated on voltmeter.

3. Repeat above for each succeeding transformer by connecting signal generator to signal grid (pin 1) of first i-f tube 6BA6 then to the signal grid (pin 7) of 6BE6 converter. The i-f stages should be aligned in this order.

WARNING—After each i-f stage has been aligned, do not repeak with the signal into the grid of the 6BE6.

ALTERNATE VISUAL ALIGNMENT OF I-F STAGES

1. Replace signal generator with sweep generator having approximately 300 kc. sweep and tune generator to 10.7 mc. Connect oscilloscope across 220,000 ohm limiter grid resistor through a 1-megohm isolating resistor. The order of alignment is the same as when using a vacuum tube voltmeter. Each i-f transformer should be individually aligned for best peak and symmetry.

R-F ALIGNMENT

1. Connect vacuum tube voltmeter across limiter grid resistor as in FM I-F alignment.

2. Ground one side of the FM Antenna by placing a wire jumper from one FM connection on the antenna terminal strip to the ground connection.

3. Connect unmodulated signal generator through a 300 ohm resistor to ungrounded antenna post and chassis, and tune signal generator to 107 mc.

4. Set radio dial to 107 mc. and tune oscillator trimmer to peak output on vacuum tube voltmeter. Adjust signal generator output until a reading of approximately 3 volts is obtained.

5. Tune 107 mc. r-f and antenna trimmers for maximum indication on voltmeter—it may be necessary to rock the dial while adjusting the r-f trimmer.

©John F. Rider

Compliments of www.nucow.com

MODEL CR-226

SPECIAL SERVICE INFORMATION

The following information is provided for the service man who has a vacuum tube voltmeter or a similar measuring instrument available.

STAGE GAINS*

Antenna Post to R-F Grid at:
600 kc. 5.00
98 mc. 1.15

R-F Grid to Converter Grid at:
600 kc. 18.5
98 mc. 9.0

R-F on Converter Grid to I-F on I-F Grid at:
600 kc. 8.3
98 mc. 6.0

I-F on Converter Grid to 1st I-F Grid at:
455 kc. (gang closed) 11.5

1st I-F Grid to 2nd I-F Grid** at:
455 kc. 64
10.7 mc. 30

2nd I-F Grid to Limiter Grid at:
10.7 mc. 30

OSCILLATOR OUTPUT VOLTAGE

The DC voltage developed across the Oscillator Grid Resistor at:
600 kc. ..... 4.5V.
98 mc. ..... 3.5V.

or 0.45 ma. through 10,000 ohm Oscillator Grid Resistor at 600 kc. and 0.35 ma. at 98 mc.

AUDIO GAIN

Voltage required across the Volume Control to produce 0.1 watt speaker output*** at 400 cycles is .01 volt with Input Selector Switch in Broadcast Setting.

*Variations of ± 20% are permissible. Broadcast readings made with sufficient input signal to provide 0.5 watt speaker output. 0.5 watt speaker output at 400 cycles is equivalent to a reading of 1.25V. as measured by a high resistance AC voltmeter across the voice coil of the speaker.

**Detector Plate on AM.

***0.1 watt speaker output at 400 cycles is equivalent to a reading of 0.55 volts as measured by a high resistance AC voltmeter across the voice coil of speaker.

DIAL CORD REPLACEMENT

CONDENSER DRIVE CABLE REPLACEMELT

Remove dial assembly after taking out two screws on each side of chassis. In a length of dial cable, form a small loop and tie a knot in the manner shown on Figure 1. Tie spring to opposite end of cable making length excluding spring 19½ inches. Hook loop over the metal hook in pulley "D" and lace the cable through the pulley slot and around the pulley in a counterclockwise direction when viewed from the rear of the dial assembly keeping the cable to the rear of the pulley groove. Lace the cable around the smaller diameter portion of the tuning control shaft wrapping 2½ turns *from front to back;* then around the opposite side of pulley "D" into the pulley through the slot. Hook the end of tension spring "F" in the hole provided in pulley "D", completing this operation.

Two separate drive cables are used in the CR-226 dial assembly. One cable is used to transmit the motion from the tuning knob to the large pulley that is coupled to the condenser gang; the other cable actuates the dial pointer whenever the large pulley on the condenser gang is rotated. Separate instructions for replacing either of these cables is given in the following paragraphs.

DIAL POINTER DRIVE CABLE REPLACEMENT

Remove dial assembly after taking out two screws on each side of chassis. Slip a one-half inch length of sleeving over a 42-inch length of dial cable. Tie the two ends to the loop end of the cable spring "E" securely so that the cable doubled measures 19⅝ inches end to end excluding spring.

Place spring hook in top hole and draw cable through slot of pulley "D". Loop one end of cable around pulley "D" in a clockwise direction in front of condenser drive cable (viewing dial assembly from front) then loop the remaining end around pulley in a counterclockwise direction. Secure both ends of cable to chassis at edge of pulley slot with scotch tape, keeping piece of sleeving on remaining loop of cable.

Replace dial assembly and loop cable over pulley "A". While holding cable taut remove scotch tape and loop cable over pulley "B" as shown in Figure 1.

Turn the tuning control shaft until the condenser gang is completely meshed and slide the dial pointer on its track until it is in line with the last calibration mark at the low frequency end of the dial. The short piece of sleeving installed prior to the stringing operation should be slid to the rear of the dial pointer and the crimping lug on the pointer pressed over the sleeving. After checking to make certain that the condenser gang is completely meshed and the dial pointer is in the position specified previously, apply a few drops of cement to each end of the sleeving to which the dial pointer is fastened. This completes the operation.

©John F. Rider

Compliments of www.nucow.com

MODEL CR-226

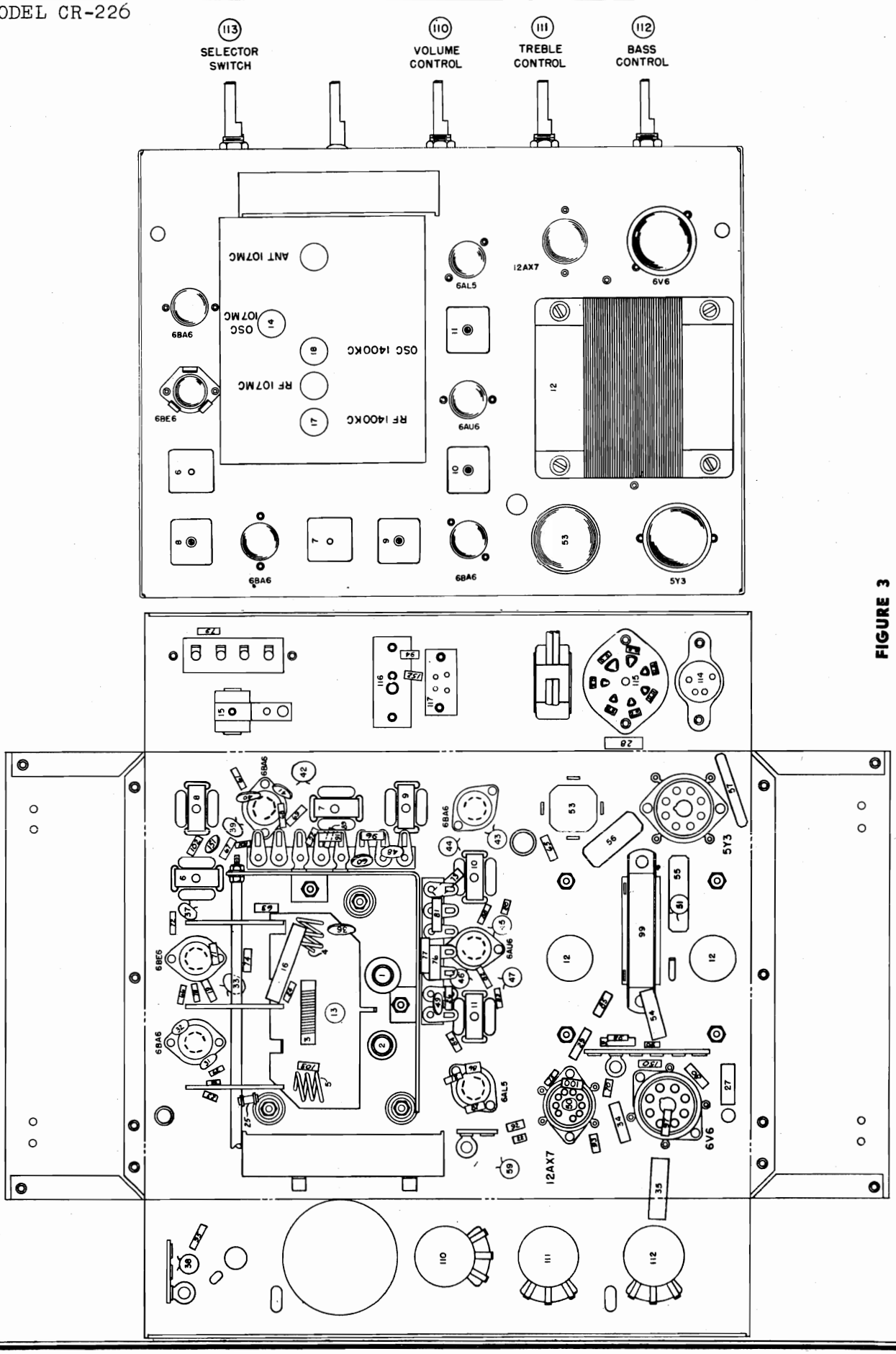

FIGURE 3

©John F. Rider

Compliments of www.nucow.com

PARTS LIST

REFERENCE NO.		MAGNAVOX PART NO.
1	Coil assembly, r-f (AM)	360405G1
2	Coil assembly, oscillator (AM)	360407G1
3	Coil assembly, oscillator (FM)	360323G1
4	Coil assembly, r-f (FM)	360322G2
5	Coil assembly, antenna (FM)	360321G2
6	Transformer, first i-f (AM)	360406G1
7	Transformer, second i-f (AM)	360406G1
8	Transformer, first i-f (FM)	360374G1
9	Transformer, second i-f (FM)	360374G1
10	Transformer, third i-f (FM)	360374G1
11	Transformer, discriminator	360375G1
12	Transformer, power	300056G1
13	Capacitor, gang tuning	260107G1
14	Capacitor, trimmer	260067G6
15	Capacitor, trimmer	250046G2
16	Choke, insulated r-f	360372G2
17	Capacitor, ceramic, 10 mmf.	250088G8
18	Capacitor, ceramic, 10 mmf.	250088G8
19	Capacitor, ceramic, 50 mmf. ±10%	250176G9
20	Capacitor, ceramic, 50 mmf. ±10%	250176G9
21	Capacitor, ceramic, 50 mmf. ±10%	250176G9
22	Capacitor, ceramic, 100 mmf.	250176G6
23	Capacitor, ceramic, 220 mmf.	250176G10
24	Capacitor, ceramic, 47 mmf.	250159G96
25	Capacitor, ceramic, 470 mmf.	250176G11
26	Capacitor, ceramic, 470 mmf.	250176G11
27	Capacitor, paper, .0005 mfd. 1000 V.	250185G8
28	Capacitor, paper, .0015 mfd. 600 V.	250201G2
29	Capacitor, paper, .001 mfd. 600 V.	250201G1
30	Capacitor, paper, .0022 mfd. 600 V. (CR 226A only)	250201G3
	Capacitor, paper, .0033 mfd. 600 V. (CR 226B only)	250201G4
31	Capacitor, ceramic, .005 mfd.	250175G1
32	Capacitor, ceramic, .005 mfd.	250175G1
33	Capacitor, ceramic, .005 mfd.	250175G1
34	Capacitor, paper, .0047 mfd. 600 V. (CR 226A only)	250201G5
	Capacitor, paper, .01 mfd. 600 V. (CR 226B only)	250201G7
35	Capacitor, paper, .01 mfd. 600 V.	250201G7
36	Capacitor, ceramic, .01 mfd.	250175G2
37	Capacitor, ceramic, .01 mfd.	250175G2
38	Capacitor, ceramic, .01 mfd.	250175G2
39	Capacitor, ceramic, .01 mfd.	250175G2
40	Capacitor, ceramic, .01 mfd.	250175G2
41	Capacitor, ceramic, .01 mfd.	250175G2
42	Capacitor, ceramic, .01 mfd.	250175G2
43	Capacitor, ceramic, .01 mfd.	250175G2
44	Capacitor, ceramic, .01 mfd.	250175G2
45	Capacitor, ceramic, .01 mfd.	250175G2

REFERENCE NO.		MAGNAVOX PART NO.
46	Capacitor, ceramic, .01 mfd.	250175G2
47	Capacitor, ceramic, .01 mfd.	250175G2
48	Capacitor, ceramic, .01 mfd.	250175G2
49	Capacitor, ceramic, .01 mfd.	250175G2
50	Capacitor, ceramic, .01 mfd.	250175G2
51	Capacitor, ceramic, .01 mfd.	250175G2
52	Capacitor, resistor, filter	250170G1
53	Capacitor, electrolytic, 30 mfd. 475V.	270021G7
	– 20 mfd. 475V. 20 mfd. 350V. 20 mfd. 25 V.	
54	Capacitor, paper, .01 mfd. 600 V.	250201G7
55	Capacitor, molded paper, .02 mfd. 600 V.	250129G3
56	Capacitor, molded paper, .02 mfd. 600 V.	250129G3
57	Capacitor, molded paper, .02 mfd. 600 V.	250201G3
58	Capacitor, ceramic, 100 mmf.	250176G6
59	Capacitor, ceramic, .01 mfd.	250175G2
60	Capacitor, ceramic, .01 mfd. (CR 226B only)	250175G2
150	Capacitor, ceramic, 100 mmf. (CR 226B only)	250159G82
151	Capacitor, ceramic, .01 mfd. (CR 226B only)	250175G2
152	Capacitor, ceramic, 10 mmf. (CR 226B only)	250088G8
61	Resistor, carbon, 100 ohms, ½W.	230104G50
62	Resistor, carbon, 100 ohms, ½ W.	230104G50
63	Resistor, carbon, 100 ohms, ½ W.	230104G50
65	Resistor, carbon, 390 ohms, ±10%, 1 W.	230105G57
66	Resistor, carbon, 1000 ohms, ½ W.	230104G62
67	Resistor, carbon, 1000 ohms, ½ W.	230104G62
68	Resistor, carbon, 1000 ohms, ½ W.	230104G62
69	Resistor, carbon, 1000 ohms, ½ W.	230104G62
70	Resistor, carbon, 1500 ohms, ½ W.	230104G64
71	Resistor, carbon, 3300 ohms, ½ W.	230104G68
72	Resistor, carbon, 3300 ohms, ½ W.	230104G68
73	Resistor, carbon, 3300 ohms, 1 W.	230105G68
74	Resistor, carbon, 4700 ohms, ±10%, ½ W.	230104G70
75	Resistor, carbon, 10 megohms, ½ W.	230104G110*
76	Resistor, carbon, 8200 ohms, ±10%, 1 W.	230105G73
77	Resistor, carbon, 8200 ohms, ±10%, 1 W.	230105G73
78	Resistor, carbon, 10,000 ohms, ±10%, ½ W.	230104G74
79	Resistor, carbon, 10,000 ohms, ±10%, ½ W.	230104G74
80	Resistor, carbon, 10,000 ohms, 1 W.	230105G74
81	Resistor, carbon, 15,000 ohms, 1 W.	230105G76
82	Resistor, carbon, 68,000 ohms, ±10%, ½ W.	230104G84
83	Resistor, carbon, 100,000 ohms, ½ W.	230104G86
84	Resistor, carbon, 100,000 ohms, ½ W.	230104G86
85	Resistor, carbon, 100,000 ohms, 1 W.	230105G86
86	Resistor, carbon, 150,000 ohms, ±10%, ½ W.	230104G88
87	Resistor, carbon, 150,000 ohms, ±10%, ½ W.	230104G88
88	Resistor, carbon, 220,000 ohms, ½ W.	230104G90
89	Resistor, carbon, 270,000 ohms, ±10%, ½ W.	230104G91
90	Resistor, carbon, 270,000 ohms, ±10%, ½ W.	230104G91
91	Resistor, carbon, 150,000 ohms, ±10%, ½ W.	230104G88
92	Resistor, carbon, 470,000 ohms, 1 W.	230105G94

REFERENCE NO.		MAGNAVOX PART NO.
93	Resistor, carbon, 270,000 ohms, ½ W. (CR 226A only)	230104G91
	Resistor, carbon, 330,000 ohms, ½ W. (CR 226B only)	230104G92
94	Resistor, carbon, 820,000 ohms, ±10%, ½ W.	230104G97
95	Resistor, carbon, 1 megohm, ½ W.	230104G98
96	Resistor, carbon, 1 megohm, ½ W.	230104G98
97	Resistor, carbon, 1 megohm, ½ W. (CR 226A only)	230104G98
	Resistor, carbon, 470,000 ohms, ½ W. (CR 226B only)	230104G94
98	Resistor, carbon, 2.2 megohm, ½ W.	230104G102
99	Resistor, wire wound, 5000 ohms, 11 W.	240035G4
100	Resistor, carbon, 220,000 ohms, ½ W. (CR 226A only)	230104G90
	Resistor, carbon, 180,000 ohms, ½ W. (CR 226B only)	230104G89
101	Resistor, carbon, 4.7 megohm, ½ W. (CR 226B only)	230104G106
102	Resistor, carbon, 220,000 ohms, ½ W. (CR 226B only)	230104G90
103	Resistor, carbon, 330,000 ohms, ½ W. (CR 226B only)	230104G56
110	Control, volume	220072G15
111	Control, treble	220072G19
112	Control, bass, with switch	220073G16
113	Switch, selector	160207G1
114	Socket, phono motor	180501G5
	Plug, phono motor	180053G1
115	Socket, speaker	180504G16
	Plug, speaker	180503G4
116	Socket, television	180060G1
	Plug, television	180311G2
117	Socket, phono	189741G1
	Plug, phono	180311G1
118	Loop antenna	360336G2
	Dial pointer	102426G2
	Dial glass	150330G1
	Panel escutcheon	
	Maroon	150318G7
	Beige	150318G8
	Decal for above	150375G1
	Knob, band switch, bass on off	
	Maroon	143727G3
	Beige	143727G2
	Knob, tuning	
	Maroon	140025G4
	Beige	140025G2
	Knob, treble, volume	
	Maroon	140025G5
	Beige	140025G3

*The part number of the loop antenna assembly changes with different cabinets. It is therefore important that you specify the Style Number of the instrument when ordering a replacement loop antenna assembly.

©John F. Rider
Compliments of www.nucow.com

MODEL CR-227

SPECIFICATIONS

Intermediate frequency	455 kc./10.7 mc.
Tuning frequency range:	
Broadcast Band	540—1620 kc.
Short Wave Band	5.9—17.3 mc.
FM Band	88—108 mc.
Tubes:	
R-F Amplifier	6BA6
Converter	6SB7Y
1st I-F Amplifier (AM-FM)	6SG7
2nd I-F Amplifier (AM-FM)	6SG7
Limiter	6SH7
Discriminator	6H6
Detector and AVC (AM) and Tuning Indicator Amplifier	6SQ7
First Audio	6J5
Second Audio	6J5
Tuning Indicator	6U5
Dial Lamps	Mazda No. 44

GENERAL

Model CR-227 radio chassis is an AM-FM tuner that must be used in conjunction with a power amplifier such as the AMP-116 for speaker operation. Heater and plate voltages for the CR-227 radio chassis are supplied from the amplifier chassis; it is therefore essential that the radio and amplifier chassis be interconnected during alignment or for other electrical service operations.

METHOD FOR REMOVING CHASSIS FROM CABINET

Model CR-227 radio chassis is designed for easy removal from the cabinet in which it is installed. As the radio panel is permanently fastened to the chassis, the control knobs need not be removed when the chassis is taken out of the cabinet for service.

To remove the chassis, first remove the antenna leads from their terminals and all plugs from the receptacles on the rear of the chassis. Then remove the two Phillips-head screws from the angular slots in the flange at the rear of the chassis. Lift the rear of the chassis about one inch and pull it straight back. Never remove the chassis tray from the cabinet it has been properly positioned to bring the radio panel in place when the chassis is replaced. In replacing the chassis, slide it so that the small hooks near the front ride inside the flanges on the sides of the chassis tray. Push the chassis forward as far as it will go and the hook should then engage the slots in the chassis tray. Replace the two Phillips-head screws and nuts and tighten securely. Replace all plugs in their receptacles and the antenna leads on their correct terminals. The antenna terminal board for the loop antenna connections is designated L-H. The two terminals on the loop are designated L and H; the leads connected to these terminals should be wired to the corresponding terminals (L and H) on the chassis.

ALIGNMENT PROCEDURE

Alignment of this receiver requires the use of an accurately calibrated RF signal generator, range 455 kc. to 107 mc., an output meter, and a vacuum tube voltmeter of approximately 10 megohm input impedance. All trimmer condensers can be identified by stampings on the chassis and gang condenser cover and are shown on the chassis layout diagram. The pointer on the radio dial should line up with the first horizontal mark on the low frequency end of the dial glass. If the pointer does not line up, loosen the screws on the pointer drive pulley at the end of the tuning gang and adjust the pointer setting; tighten the screws after this adjustment. Be sure the gang is fully meshed for this pointer alignment.

©John F. Rider

Compliments of www.nucow.com

AM ALIGNMENT

I-F ALIGNMENT

1. Set range control to position No. 1. Set volume, treble and bass controls to maximum, the Band Switch to Broadcast position, and dial pointer to 1000 kc.

2. Tune the signal generator to EXACTLY 455 kc.

3. Connect output of modulated signal generator to the signal grid of the 6SB7Y (pin 8) through a .01 mfd. capacitor and signal generator ground to radio chassis.

4. All i-f transformers on this chassis are slug-tuned. Both slug adjustments for 455 kc. are located on top of the transformers; the 10.7 mc. adjustments are accessible on the bottom.

5. Connect output meter across voice coil of 15-inch speaker and peak in order the third, second and first i-f transformers.

6. Use only enough signal input to give a readable indication on voltmeter so that the AVC will not operate and give false readings.

ALTERNATE VISUAL ALIGNMENT OF I-F STAGES

1. Connect 455 kc. sweep generator having approximately 40 kc. sweep to signal grid of 6SB7Y (pin 8) through a .01 mfd. capacitor. Connect an oscilloscope through a 1 megohm isolating resistor across the 220,000 ohm diode load resistor. Align for best possible peak with range switch in position No. 1, and symmetry in position No. 4.

BROADCAST BAND R-F ALIGNMENT

1. Connect signal generator through .00025 mfd. capacitor to antenna and ground terminals on antenna terminal strip on rear of chassis. Be sure "Ant-loop" switch on top of the chassis is in the ANT. position. Connect output meter as for AM i-f alignment.

2. Tune signal generator to 1400 kc.

3. Set dial to 1400 kc. and adjust oscillator, r-f and antenna trimmers for maximum indication on meter.

4. Set signal generator to 600 kc. and tune radio to signal. Adjust the 600 kc. padder to maximum output while simultaneously rocking the gang.

5. 1400 kc. calibration should then be checked and re-adjusted if necessary with the 1400 kc. oscillator trimmer.

SHORT WAVE BAND R-F ALIGNMENT

1. Set the Band Switch to Short Wave and replace the .00025 mfd. capacitor in series with the signal generator lead to the antenna terminal, with a 400-ohm resistor.

2. Set the signal generator and the receiver to 15 mc. and adjust the oscillator, r-f and antenna trimmers for maximum indication on the meter. While adjusting the 15 mc. oscillator trimmer, two peaks may be observed; only one is the correct peak for 15 mc. alignment. To obtain the correct peak, screw trimmer in to maximum capacitance, then decrease until the first peak is observed. This is the correct one.

Another method for checking for the correct peak is to tune the receiver to 15.91 mc. with signal generator at 15 mc. and with the output increased. If the 15 mc. oscillator trimmer is properly adjusted, the signal will be received at 15.91 mc.—if incorrectly aligned, the signal will be received at 14.09 mc.

FM ALIGNMENT

DISCRIMINATOR ALIGNMENT

1. Tune signal generator to EXACTLY 10.775 mc. and connect to pin 4 of the 6SH7 limiter tube socket through a .01 mfd. capacitor.

2. Connect a DC vacuum tube voltmeter from Pin 4 on 6H6 tube socket to ground through a 1 megohm isolating resistor.

3. Peak both discriminator slugs at 10.775 mc.

4. Retune signal generator to exactly 10.7 mc. and adjust bottom slug for zero volts.

5. The DC voltage at 10.625 mc. should be within 10% of the voltage at 10.775 mc. and of opposite polarity.

Note: If the signal generator is not capable of sufficient output to produce a readable DC voltage, the amplification of the last i-f stage can be used to increase the signal input to the limiter for discriminator alignment. To accomplish this, align the last i-f stage as indicated in "IF Alignment". Then align discriminator as above leaving the signal generator connected to the grid of the 6SG7 2nd i-f tube.

I-F ALIGNMENT

1. Connect high side of signal generator, through a .01 mfd. capacitor and a 1000 ohm resistor in series, to pin 4 of the 6SG7 2nd i-f tube. Connect low side of generator to chassis.

©John F. Rider

Compliments of www.nucow.com

MODEL CR-227

2. Close gang condenser and connect vacuum tube voltmeter across 220,000 ohm limiter grid resistor; (Points "A" to "X" on schematic). Adjust signal generator output until a reading of at least 3 volts is obtained. In order to reduce regeneration caused by the vacuum tube voltmeter leads, a 1-megohm isolating resistor, connected with as short leads as possible to point "A" should be used in series with the vacuum tube voltmeter. Align the 3rd i-f transformer for best peak as indicated on voltmeter.

3. Repeat above for the 2nd and 1st transformer by connecting signal generator to signal grid of first i-f tube 6SG7 then to the signal grid of 6SB7Y converter. The i-f stages should be aligned in this order.

WARNING—After each i-f stage has been individually aligned, do not repeak with the signal into the grid of the 6SB7Y.

ALTERNATE VISUAL ALIGNMENT OF I-F STAGES

1. Replace signal generator with sweep generator having approximately 300 kc. sweep and tune generator to 10.7 mc. Connect oscilloscope across 220,000 ohm limiter grid resistor through a 1-megohm isolating resistor. The order of alignment is the same as when using a vacuum tube voltmeter. Each i-f transformer should be individually aligned for best peak and symmetry.

R-F ALIGNMENT

1. Connect vacuum tube voltmeter across limiter grid resistor as in FM I-F alignment. Adjust signal generator output until a reading of at least 3 volts is obtained.

2. Ground one side of the FM Antenna by placing a wire jumper from one FM connection on the antenna terminal strip to the ground connection.

3. Connect unmodulated signal generator through a 300 ohm resistor to ungrounded antenna post and chassis, and tune signal generator to 107 mc.

4. Set radio dial to 107 mc. and tune oscillator trimmer to peak output on vacuum tube voltmeter.

5. Tune 107 mc. r-f and antenna trimmers for maximum indication on voltmeter—it may be necessary to rock the gang while adjusting the r-f trimmer.

SPECIAL SERVICE INFORMATION

The following information is provided for the service man who has a vacuum tube voltmeter or a similar measuring instrument available.

STAGE GAINS*

Antenna Post to R-F Grid at:	
600 kc.	5.8
6.5 mc.	2.9
98 mc.	1.0
R-F Grid to Converter Grid at:	
600 kc.	11.6
6.5 mc.	9.5
98 mc.	6.8
R-F on Converter Grid to 455 kc. or I-F Grid at:	
600 kc.	1.7
6.5 mc.	2.4
98 mc.	6.8
I-F on Converter Grid to 1st I-F Grid at:	
455 kc. (dial pointer at 600 kc.)	2.6
1st I-F Grid to 2nd I-F Grid at:	
455 kc.	20.5
10.7 mc.	37
2nd I-F Grid to Limiter Grid at:	
10.7 mc.	34.5

AUDIO GAIN

Voltage required across the Volume Control to produce 0.1 watt speaker output** at 400 cycles is:

.013 volt with Amplifier AMP-116A

with Band Switch in BDCST setting.

OSCILLATOR OUTPUT VOLTAGE

The DC voltage developed across the Oscillator Grid Resistor (105) at:

600 kc.	4.5V.
6.5 mc.	4.6V.
98 mc.	5.4V.

or 0.3 ma. through 15,000 ohm Oscillator Grid Resistor at 600 kc., 0.31 ma. at 6.5 mc. and 0.36 ma. at 98 mc.

*Variations of ±20% are permissible. All AM readings made with sufficient input signal to provide 0.5 watt speaker output. 0.5 watt speaker output at 400 cycles is equivalent to a reading of 2.75V. as measured by a high resistance AC voltmeter across the voice coil of the 15-inch speaker.

**0.1 watt speaker output at 400 cycles is equivalent to a reading of 1.22 volts as measured by a high resistance AC voltmeter across the voice coil of 15-inch speaker.

10 KC. FILTER ADJUSTMENT

This chassis incorporates a 10 kc. filter circuit to eliminate the beat note heard as a whistle between stations on the broadcast band. If the trimmer is out of adjustment the following procedure should be observed:

©John F. Rider

Compliments of www.nucow.com

1. Adjust the range control switch to the No. 3 setting.

2. Connect the output of an audio oscillator to the phonograph pickup socket. Adjust the oscillator to exactly 10,000 cycles.

3. Set the band selector to PHONO and adjust the 10 kc. trimmer for minimum output.

4. If an audio oscillator is not available for making this adjustment set the band selector to BDCST, set the range control to position 4, connect the antenna to the receiver and set the gang condenser to a point between two stations on adjacent channels having approximately the same power. If the 10 kc. trimmer is out of adjustment, a whistle will be heard. Adjust the trimmer until the whistle is eliminated.

DIAL CORD REPLACEMENT

Rotate the brass pulley designated "A" in Figure 1 until the dial pointer strikes the stop at the high frequency end of the dial calibration. In this condition the slot in pulley "A" should be approximately ten degrees to the left of being vertical see Figure 1. If the slot in the pulley is in some other position under the above mentioned conditions, the pointer set screw is probably loose and has allowed the pointer to slip.

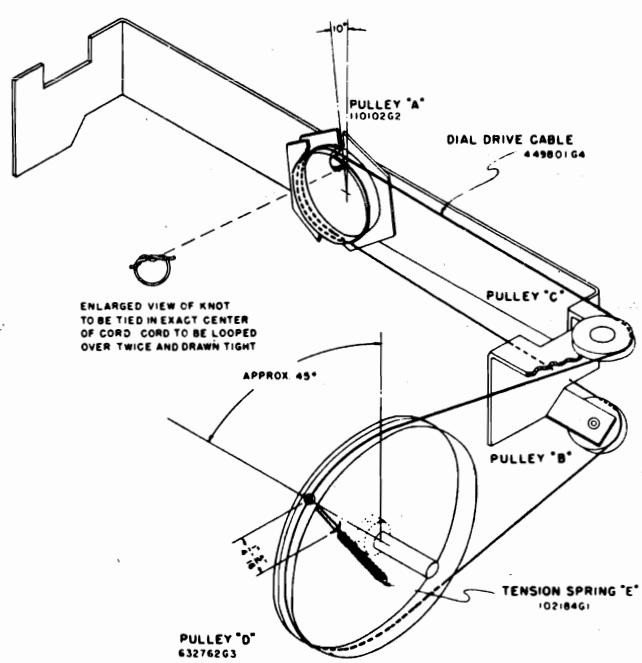

FIGURE 1

To correct this condition, first remove the glass dial and loosen the pointer screw. Then while holding pulley "A" so that its slot is approximately ten degrees to the left of vertical (when viewed from the rear) adjust the pointer until it is resting against the stop at the high frequency end of its travel. Then tighten the pointer set screw securely and replace the glass dial.

Completely unmesh the condenser gang and check the location of the hole or slot in pulley "D." If this hole is not approximately 45 degrees back from vertical as shown on Figure 1, loosen the two No. 6 Allen set screws in the hub of pulley "D" and slip the pulley on its shaft (while holding the condenser gang unmeshed) until the specified adjustment is obtained; then tighten one of the set screws securely. It will be shown later that this is a temporary setting. Next, tie a double knot in the exact center of a 25-inch length of dial cable and fold the cable back on itself so that the knot is at one end. The correct method for tying this knot is shown as an inset on Figure 1. Grasp the cable near the knotted end and slide it into the pulley slot so that the knot is against the inside rim of the pulley as shown in the sketch. The piece of cable nearest the dial frame should be wound in the direction shown for one-half turn; then over the lower pulley "B," around the bottom of the large pulley "D" and into the hole. Pull the cable taut and wrap the end around the small hook on pulley "D" temporarily.

The remaining piece of cable should be wound around pulley "A" in the direction shown, for one complete turn, over the upper pulley "C," and over the top of pulley "D." Thread the end through the small hole in pulley "D" and pull both ends of the cable taut. With one end of tension spring "E" fastened to the hook on pulley "D" lace the two free ends of the cable through the opposite end of the spring and tie a knot at a point that will allow 1/4" to 5/16" of cable between the spring and the inside rim of pulley "D." Be sure to tie the knot around one coil of the spring in the manner shown.

Now with the condenser gang completely meshed, check the position of the dial pointer. If it is not in line with the last calibration mark at the low frequency end of the dial, loosen the set screw in pulley "D" and turn it until the pointer is in the specified position. Be sure that the condenser gang does not move during this adjustment. Then tighten the two screws in pulley "D" securely completing the operation.

©John F. Rider

Compliments of www.nucow.com

MODEL CR-227

CONDENSER GANG DRIVE ADJUSTMENTS

Whenever any of the mechanical parts in the condenser gang drive assembly require replacement due to rough handling or for any other reason, it is extremely important that clearances and adjustments shown on Figures 2 and 3 are correct; otherwise, the tuning mechanism will be sluggish or it may slip during operation.

In reassembling the mechanism after any part was replaced, follow the procedure outlined below:

1. Assemble the Tuning Shaft, Drive Collar, Bracket, Tension Spring, Washer, and Flywheel in the order shown on Figure 3. The distance between the front of the Drive Collar and the front of the Tuning Shaft must be 1 1/8 inches as specified on Figure 2. Install

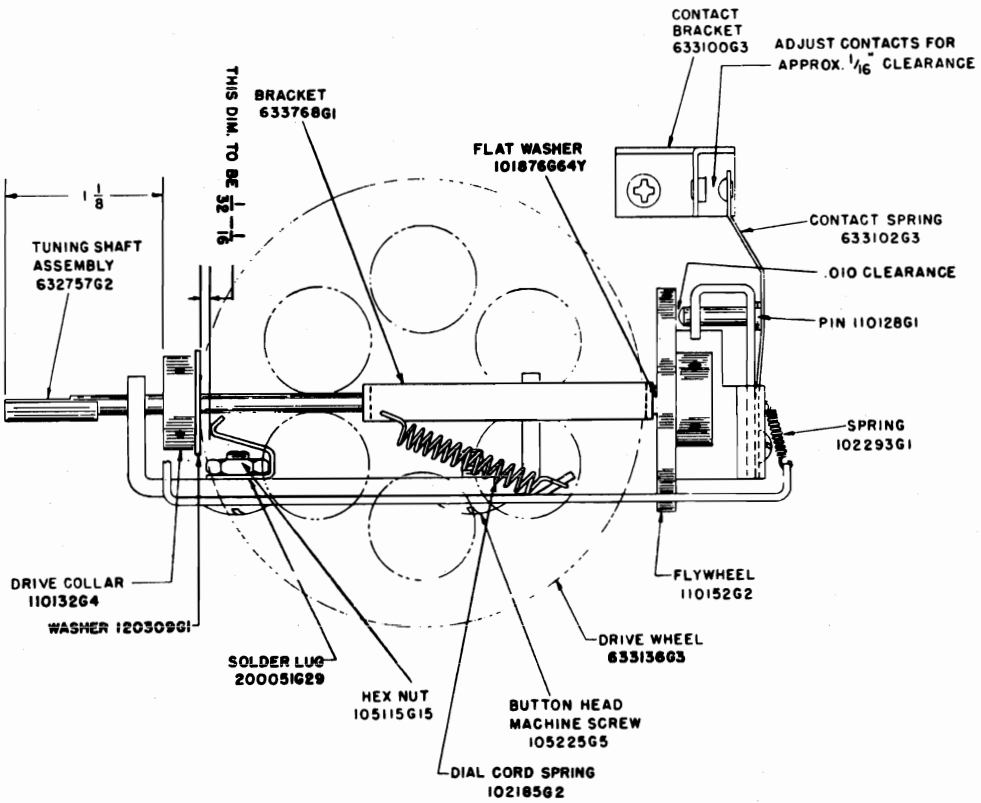

FIGURE 2

the Flywheel on the rear of the Tuning Shaft and slide it forward until it nearly touches the edge of the Drive Wheel; then tighten one of the set screws in the Flywheel hub. Insert a .010" gauge between the Flywheel and the Pin, and while holding the gauge in this position, loosen the set screw in the Flywheel hub that was previously tightened. The Tension Spring should force the Flywheel back against the gauge—when this occurs, tighten both set screws in the Flywheel hub.

2. Adjust the Muting Switch contact clearance by loosening the two screws in the Contact Bracket and sliding the bracket in the required direction until a 1/16" clearance is obtained. If this adjustment cannot be obtained in the manner prescribed, bend the Contact Bracket until proper clearance is realized.

3. The Drive Wheel is properly located on its shaft when its edge nearest the hub is in line with the outside edge of the Drive Collar as shown on Fig-

©John F. Rider

Compliments of www.nucow.com

ure 3. Two Allen set screws in the Drive Wheel hub provide a means of adjusting the position of this wheel.

4. When the adjustment outlined in paragraph 2 is correct, the proper contact clearance will automatically be obtained when the Muting Switch is to be "unmuted" while the push buttons are being set. While pressure is applied to any one of the push buttons while they are being set up, a pressure applied simultaneously to the Tuning Control knob will cause the Muting Switch contacts to open. Detailed instructions on setting up these push buttons are shown elsewhere in this bulletin.

5. If the push button shafts at both ends do not engage the Treadle Bar as shown on Figure 3, the three screws in the Treadle Bar must be loosened and the Treadle Bar should be moved until the required condition is obtained.

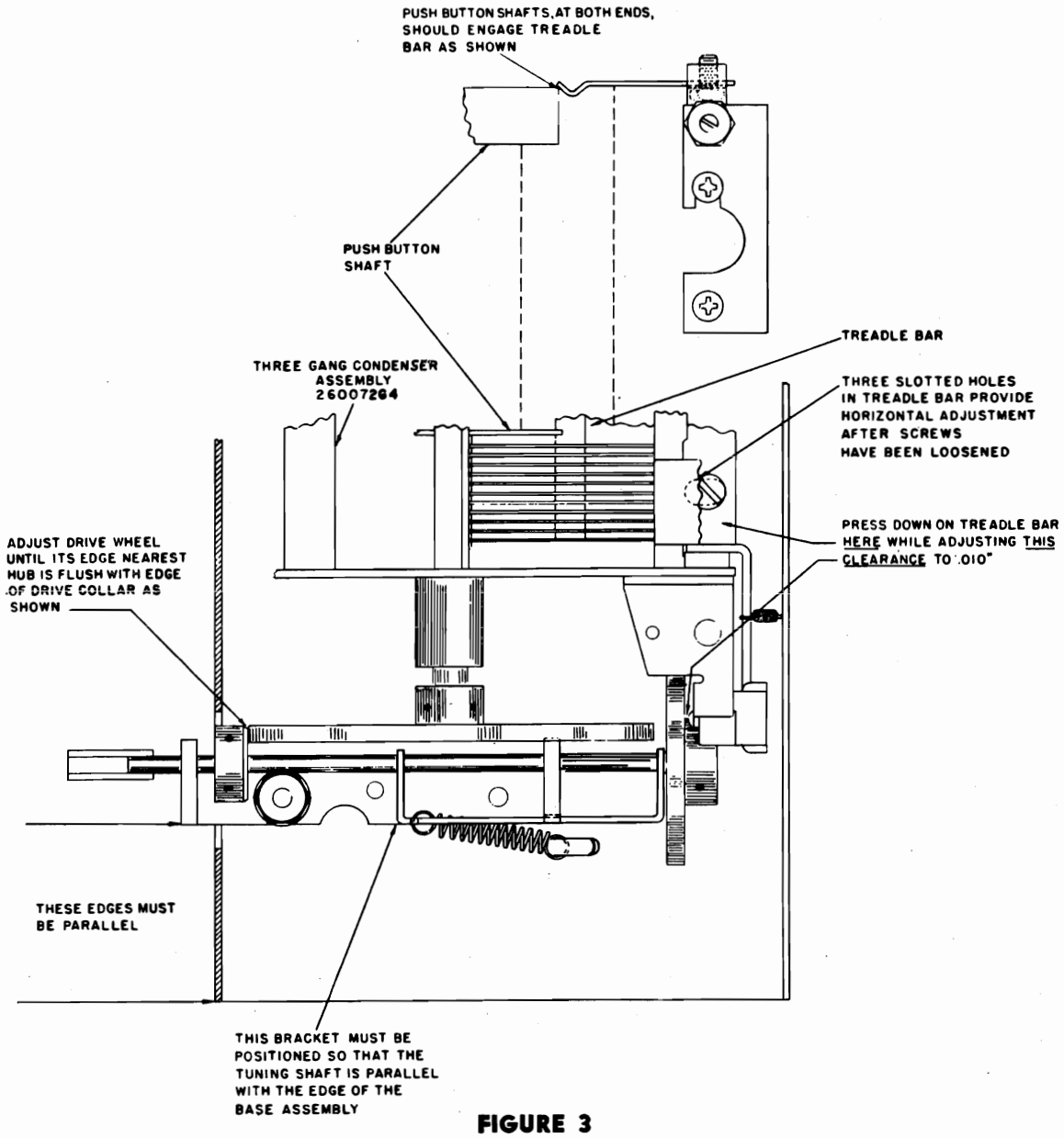

FIGURE 3

©John F. Rider

Compliments of www.nucow.com

MODEL CR-227

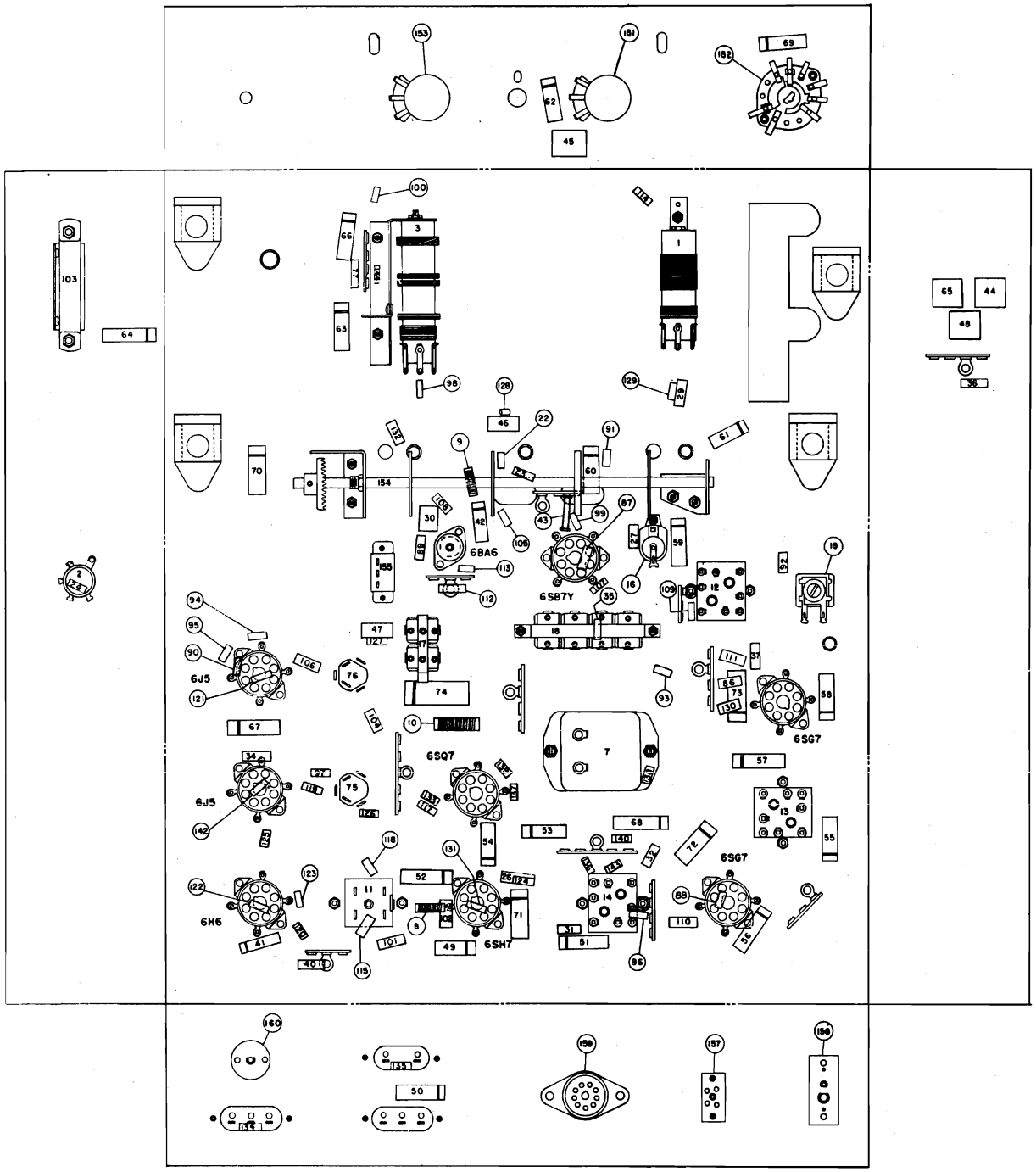

FIGURE 5

©John F. Rider

Compliments of www.nucow.com

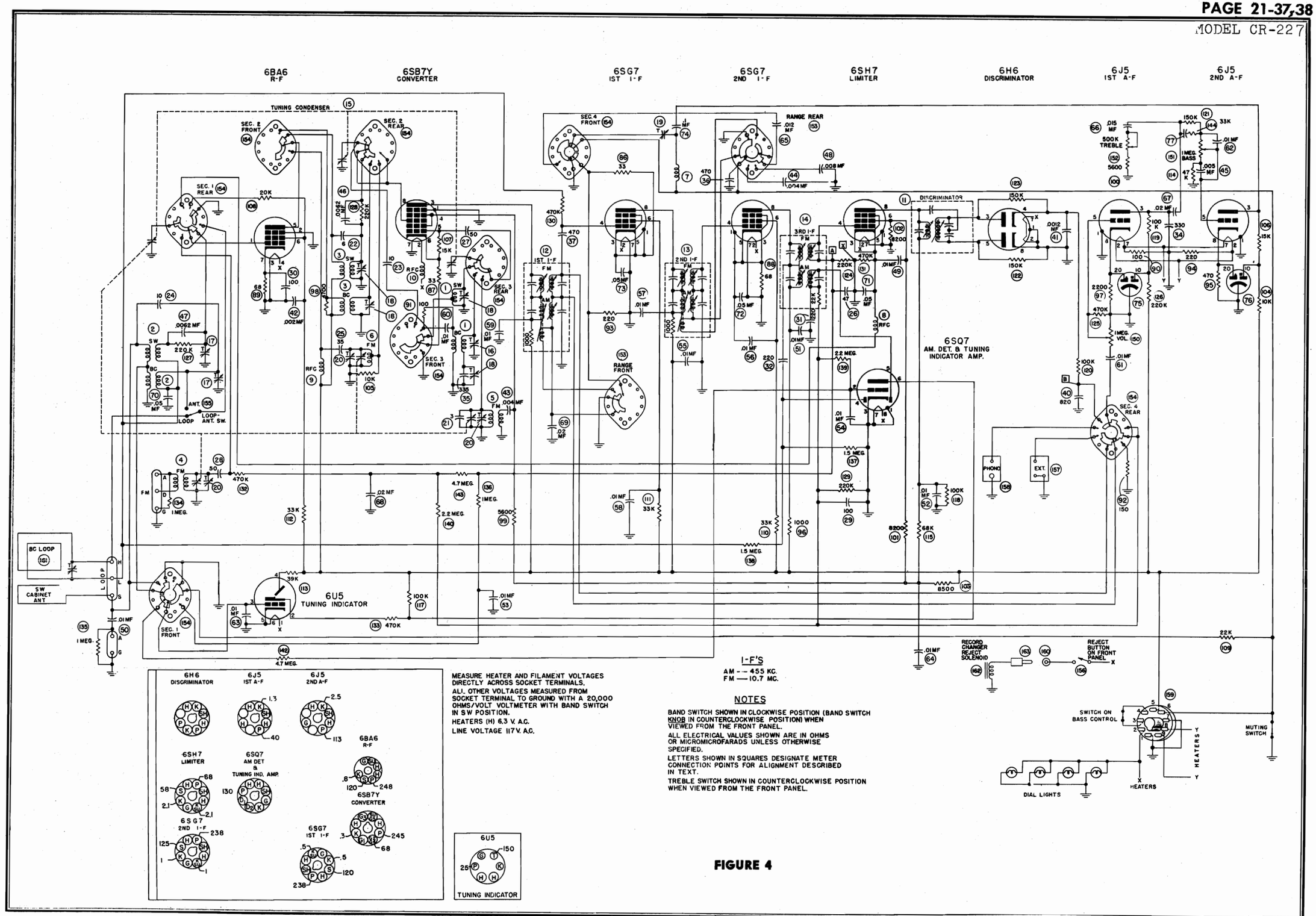

MEASURE HEATER AND FILAMENT VOLTAGES DIRECTLY ACROSS SOCKET TERMINALS.

ALL OTHER VOLTAGES MEASURED FROM SOCKET TERMINAL TO GROUND WITH A 20,000 OHMS/VOLT VOLTMETER WITH BAND SWITCH IN SW POSITION.

HEATERS (H) 6.3 V. A.C.

LINE VOLTAGE 117 V. A.C.

I-F'S

AM — 455 KC.
FM — 10.7 MC.

NOTES

BAND SWITCH SHOWN IN CLOCKWISE POSITION (BAND SWITCH KNOB IN COUNTERCLOCKWISE POSITION) WHEN VIEWED FROM THE FRONT PANEL.

ALL ELECTRICAL VALUES SHOWN ARE IN OHMS OR MICROMICROFARADS UNLESS OTHERWISE SPECIFIED.

LETTERS SHOWN IN SQUARES DESIGNATE METER CONNECTION POINTS FOR ALIGNMENT DESCRIBED IN TEXT.

TREBLE SWITCH SHOWN IN COUNTERCLOCKWISE POSITION WHEN VIEWED FROM THE FRONT PANEL.

FIGURE 4

© John F. Rider

Compliments of www.nucow.com

MODEL CR-227

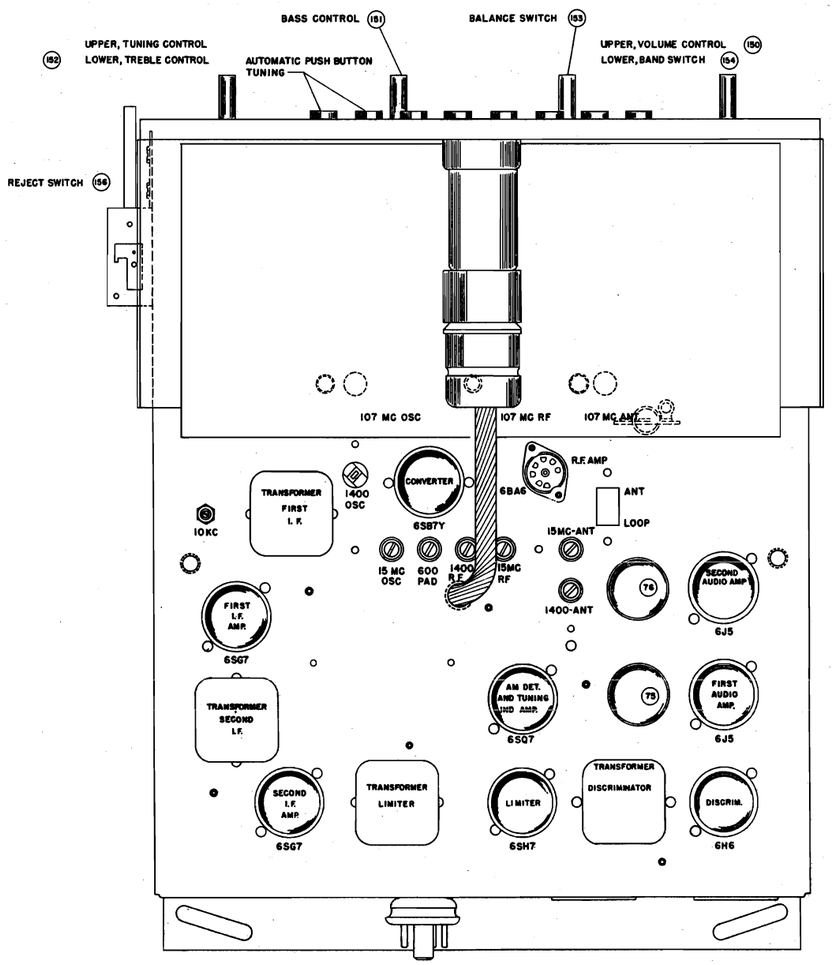

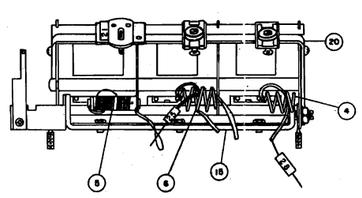

©John F. Rider

MODEL CR-227

REFERENCE NO.	DESCRIPTION	MAGNAVOX PART NO.
1	Coil Assembly, oscillator, AM	360298-1
2	Coil Assembly, antenna, AM	360299-1
3	Coil Assembly, r-f, AM	360300-1
4	Coil Assembly, antenna, FM	360296-3
5	Coil Assembly, oscillator, FM	360295-1
6	Coil Assembly, r-f, FM	360297-3
7	Coil Assembly, 10 kc.	360244-1
8	Choke Coil	360284-1
9	Choke Coil	360284-1
10	Choke Coil, filament	360264-1
11	Transformer, discriminator	360305-1
12	Transformer, i-f	360285-1
13	Transformer, i-f	360285-1
14	Transformer, limiter	360286-1
15	Capacitor, variable, three gang tuning	260075-1
16	Capacitor, variable, oscillator trimmer (broadcast)	260067-4
17	Capacitor, variable, 2 trimmer	260080-1
18	Capacitor, variable, 4 trimmer and oscillator padder	260082-1
19	Capacitor, variable, 10 kc., trimmer	259610-2
20	Capacitor, trimmer assembly	260094-1
21	Capacitor, ceramic, 3 mmf.	250088-38
22	Capacitor, ceramic & composition, 6 mmf.	250164-2
23	Capacitor, ceramic & composition, 10 mmf.	250164-3
24	Capacitor, ceramic & composition, 10 mmf.	250164-3
25	Capacitor, ceramic, 35 mmf.	250088-40
26	Capacitor, mica, 47 mmf.	250159-96
27	Capacitor, ceramic, 50 mmf.	250088-39
28	Capacitor, ceramic, 50 mmf.	250088-39
29	Capacitor, mica, 100 mmf.	250159-98
30	Capacitor, mica, 100 mmf.	250159-98
31	Capacitor, mica, 220 mmf.	250159-100
32	Capacitor, mica, 220 mmf.	250159-100
34	Capacitor, mica, 330 mmf.	250159-101
35	Capacitor, silver mica, 335 mmf., ±1%	250085-38
36	Capacitor, mica, 470 mmf.	250159-102
37	Capacitor, mica, 470 mmf.	250159-102
40	Capacitor, mica, 820 mmf., ±10%	250159-132
41	Capacitor, paper, .0012 mfd., ±10%, 600 V.	250169-12
42	Capacitor, paper, .002 mfd., 600 V.	250152-44
43	Capacitor, ceramic, .004 mfd.	250088-34
44	Capacitor, molded paper, .004 mfd., 600 V.	250129-7
45	Capacitor, molded paper, .005 mfd., 400 V.	250129-10
46	Capacitor, mica, .0062 mfd., ±5%	250161-27
47	Capacitor, mica, .0062 mfd., ±5%	250161-27
48	Capacitor, molded paper, .008 mfd., 400 V.	250129-11
49	Capacitor, paper, .01 mfd., 600 V.	250152-38
50	Capacitor, paper, .01 mfd., 600 V.	250152-38
51	Capacitor, paper, .01 mfd., 600 V.	250152-38
52	Capacitor, paper, .01 mfd., 600 V.	250152-38
53	Capacitor, paper, .01 mfd., 600 V.	250152-38

REFERENCE NO.	DESCRIPTION	MAGNAVOX PART NO.
54	Capacitor, paper, .01 mfd., 600 V.	250152-38
55	Capacitor, paper, .01 mfd., 600 V.	250152-38
56	Capacitor, paper, .01 mfd., 600 V.	250152-38
57	Capacitor, paper, .01 mfd., 600 V.	250152-38
58	Capacitor, paper, .01 mfd., 600 V.	250152-38
59	Capacitor, paper, .01 mfd., 600 V.	250152-38
60	Capacitor, paper, .01 mfd., 600 V.	250152-38
61	Capacitor, paper, .01 mfd., 600 V.	250152-38
62	Capacitor, paper, .01 mfd., 600 V.	250152-38
63	Capacitor, paper, .01 mfd., 600 V.	250152-38
64	Capacitor, paper, .01 mfd., 600 V.	250152-38
65	Capacitor, molded paper, .012 mfd., 200 V.	250152-15
66	Capacitor, paper, .015 mfd., ±10%, 200 V.	250152-15
67	Capacitor, paper, .02 mfd., 600 V.	250152-15
68	Capacitor, paper, .02 mfd., 600 V.	250152-15
69	Capacitor, paper, .02 mfd., 600 V.	250152-15
70	Capacitor, paper, .05 mfd., 200 V.	250152-15
71	Capacitor, paper, .05 mfd., 200 V.	250152-15
72	Capacitor, paper, .05 mfd., 200 V.	250152-15
73	Capacitor, paper, .05 mfd., 200 V.	250152-15
74	Capacitor, paper, .1 mfd., 600 V.	250152-33
75	Capacitor, electrolytic, 10 mfd., 450 V.—20 mfd., 25 V.	270023-6
76	Capacitor, electrolytic, 10 mfd., 450 V.—20 mfd., 25 V.	270023-6
77	Capacitor, mica, 1500 mmf., ±10%, 500 V.	250160-66
86	Resistor, composition, 33 ohms, ½ W.	230084-4
87	Resistor, composition, 33 ohms, ½ W.	230084-4
88	Resistor, composition, 68 ohms, ½ W.	230084-6
89	Resistor, composition, 68 ohms, ½ W.	230084-6
90	Resistor, composition, 100 ohms, ±10%, ½ W.	230084-50
91	Resistor, composition, 100 ohms, ½ W.	230084-7
92	Resistor, composition, 150 ohms, ½ W.	230084-8
93	Resistor, composition, 220 ohms, ½ W.	230084-9
94	Resistor, composition, 220 ohms, ±10%, ½ W.	230084-54
95	Resistor, composition, 470 ohms, ½ W.	230084-11
96	Resistor, composition, 1000 ohms, ½ W.	230084-13
97	Resistor, composition, 2200 ohms, ½ W.	230084-15
98	Resistor, composition, 4700 ohms, ½ W.	230084-17
99	Resistor, composition, 5600 ohms, ±10%, ½ W.	230084-71
100	Resistor, composition, 5600 ohms, ±10%, ½ W.	230084-71
101	Resistor, composition, 8200 ohms, ±10%, 1 W.	230085-73
102	Resistor, composition, 8200 ohms, ±10%, 1 W.	230085-73
103	Resistor, strip, 8500 ohms	240035-5
104	Resistor, composition, 10,000 ohms, 1 W.	230085-19
105	Resistor, composition, 10,000 ohms, ½ W.	230084-19
106	Resistor, composition, 15,000 ohms, 1 W.	230085-20
107	Resistor, composition, 15,000 ohms, ½ W.	230084-20
108	Resistor, composition, 20,000 ohms, ±5%, 1 W.	230085-190
109	Resistor, composition, 22,000 ohms, ½ W.	230084-21
110	Resistor, composition, 33,000 ohms, 1 W.	230085-22
111	Resistor, composition, 33,000 ohms, 1 W.	230085-22

REFERENCE NO.	DESCRIPTION	MAGNAVOX PART NO.
112	Resistor, composition, 33,000 ohms, ±10%, 2 W.	230086-80
113	Resistor, composition, 39,000 ohms, ±10%, ½ W.	230086-81
114	Resistor, composition, 47,000 ohms, ½ W.	230084-23
115	Resistor, composition, 68,000 ohms, ±10%, ½ W.	230084-84
117	Resistor, composition, 100,000 ohms, ½ W.	230084-25
118	Resistor, composition, 100,000 ohms, ½ W.	230084-25
119	Resistor, composition, 100,000 ohms, ½ W.	230084-25
120	Resistor, composition, 100,000 ohms, ±10%, ½ W.	230084-86
121	Resistor, composition, 150,000 ohms, ½ W.	230084-26
122	Resistor, composition, 150,000 ohms, ±10%, ½ W.	230084-88
123	Resistor, composition, 150,000 ohms, ±10%, ½ W.	230084-88
124	Resistor, composition, 220,000 ohms, ½ W.	230084-27
125	Resistor, composition, 470,000 ohms, ±10%, ½ W.	230084-94
126	Resistor, composition, 220,000 ohms, ½ W.	230084-27
127	Resistor, composition, 220,000 ohms, ½ W.	230084-27
128	Resistor, composition, 220,000 ohms, ½ W.	230084-27
129	Resistor, composition, 220,000 ohms, ½ W.	230084-27
130	Resistor, composition, 470,000 ohms, ½ W.	230084-29
131	Resistor, composition, 470,000 ohms, ½ W.	230084-29
132	Resistor, composition, 470,000 ohms, ½ W.	230084-29
133	Resistor, composition, 470,000 ohms, ½ W.	230084-29
134	Resistor, composition, 1 megohm, ½ W.	230084-11
135	Resistor, composition, 1 megohm, ½ W.	230084-31
136	Resistor, composition, 1 megohm, ½ W.	230084-31
137	Resistor, composition, 1.5 megohm, ½ W.	230084-32
138	Resistor, composition, 1.5 megohm, ½ W.	230084-32
139	Resistor, composition, 2.2 megohm, ½ W.	230084-33
140	Resistor, composition, 2.2 megohm, ½ W.	230084-33
142	Resistor, composition, 4.7 megohm, ½ W.	230084-35
143	Resistor, composition, 4.7 megohm, ½ W.	230084-35
144	Resistor, composition, 33,000 ohms, ±10%, ½ W.	230084-80
150	Control, volume, 1 megohm	220044-24
151	Control, bass, 1 megohm, with switch	220073-6
		220045-7
152	Control, treble	160178-1
153	Switch, range	220044-26
		220072-12
154	Switch, rotary band switch	160179-1
155	Switch, slide SPDT	160176-1
156	Switch, reject	160188-1
157	Socket, external input	180060-1
158	Socket, phono	189741-1
159	Socket, amplifier	180427-2
160	Socket, solenoid	182776-1
161	Antenna Loop Assembly *The part number of the loop antenna assembly changes with different Cabinets. It is therefore important that you specify the STYLE NUMBER of the instrument when ordering a replacement loop antenna assembly.	
162	Solenoid	360313-1
163	Plug, solenoid	189147-1
	Dial Glass Assembly	150303-1
	Push Button Assembly for Gang	260093-1

©John F. Rider

Compliments of www.nucow.com

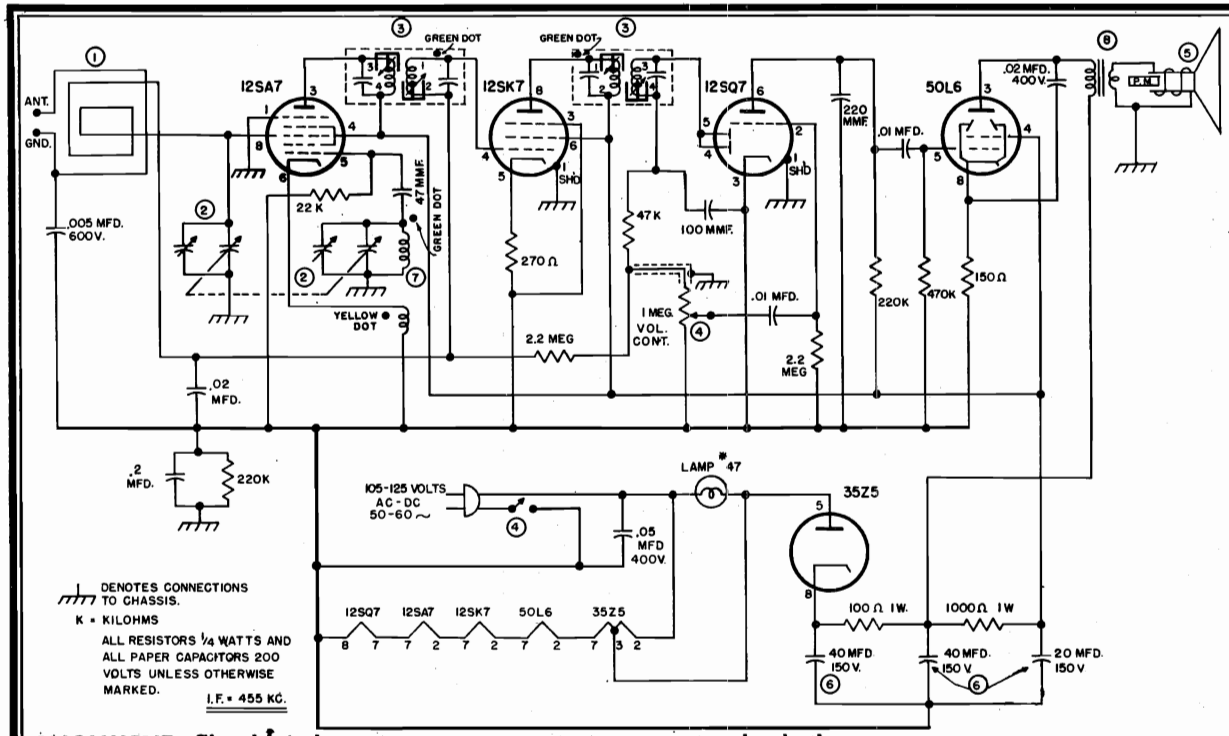

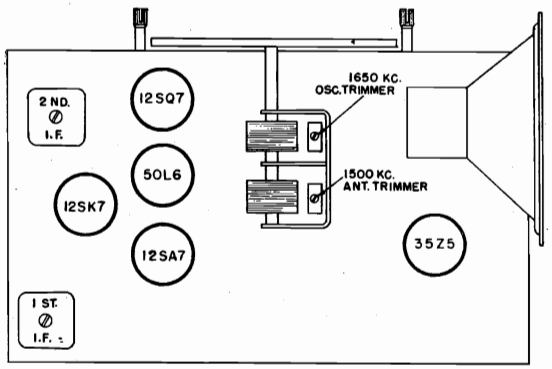

TRIMMER AND TUBE LOCATION DIAGRAM

	PART NO	DESCRIPTION
1	1.525	LOOP ASSEMBLY
2	2.223	2GANG VARIABLE CONDENSER
3	1.445-5	I.F. TRANSFORMER
4	8.201-8	VOLUME CONTROL & SWITCH
5	30.329	P.M. 4" SPEAKER
6	5.415-4	ELECTROLYTIC CAP. 40-40-20 MFD.
7	1.526	OSCILLATOR COIL
8	9.249-1	OUTPUT TRANSFORMER

ALIGNMENT: Should it become necessary at any time to check the alignment of this receiver, proceed as follows:

(1) Set the Signal Generator to 455 KC and connect to the stator lug on the rear section of the Variable Capacitor. Connect the Signal Generator Ground lead to the chassis. Connect a suitable output meter across the Speaker Voice Coil Connections. Turn the Volume Control to the maximum position. Turn the Variable Capacitor to the extreme clockwise position.

(2) Adjust the trimmers located at the top of the first and second I. F. Transformers or the iron cores located at the top and bottom of each I. F. for maximum output as indicated on the Output Meter.

(3) Loosely couple the Signal Generator lead to the Loop and set to 1650 KC.

(4) With Variable Capacitor set at the extreme clockwise position, tune in the 1650 KC signal by means of the Oscillator Trimmer on the Variable Capacitor (front section).

(5) Set the Signal Generator to 1500 KC and turn the Tuning Control so that this frequency is indicated on the dial. Adjust the Antenna Trimmer on the Variable Capacitor (rear section) for maximum output. No other adjustments are necessary.

LINE VOLTAGE: This receiver is designed for operation on 105-125 Volts, 50-60 Cycles, either Alternating or Direct Current (AC-DC).

POWER CONSUMPTION: 30 Watts.

TUNING RANGE: Broadcast: 540 to 1650 Kilocycles (180 to 555 meters).

DIAL: The Dial Scale is calibrated in Kilocycles times 10 to correspond with newspaper or periodical listings.

TUBES: The tubes used, and their functions, are as follows:

12SA7 Converter	12SQ7 Detector, Avc and Audio Amp.
12SK7 I.F. Amplifier	50L6 Beam Power Amplifier
35Z5 Rectifier	

©John F. Rider

Compliments of www.nucow.com

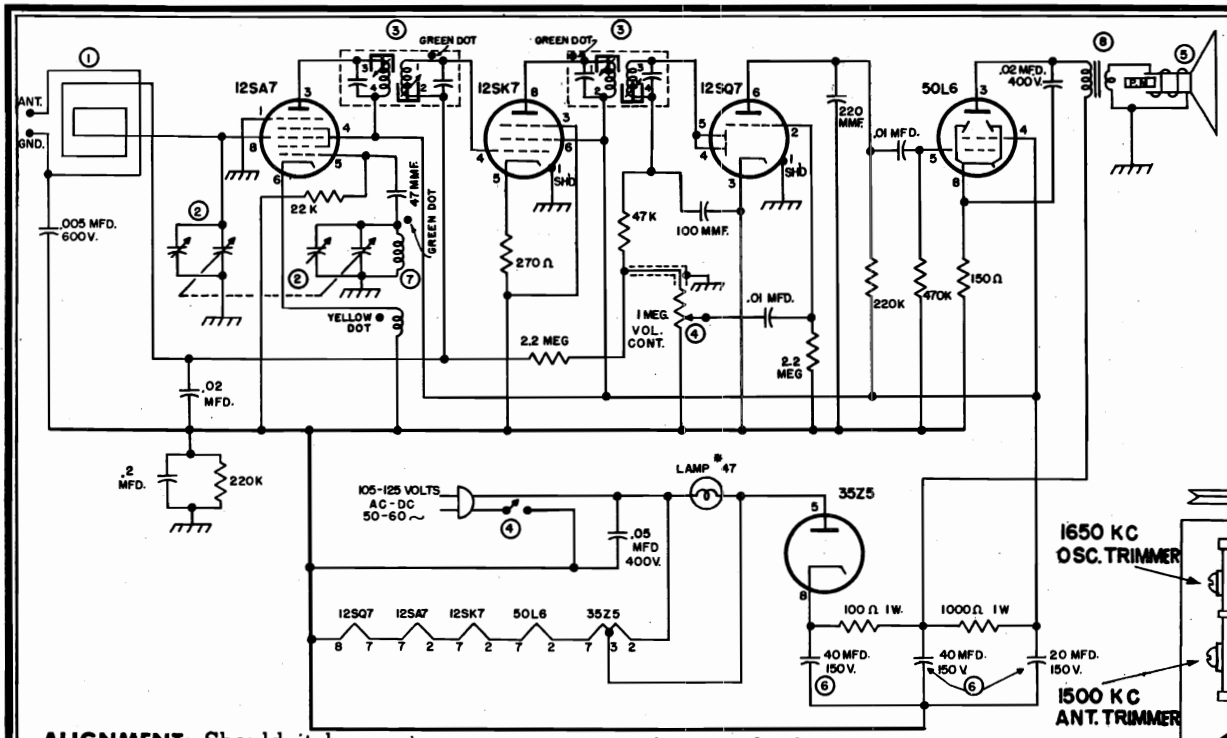

PART NO.	DESCRIPTION
1 1.527	LOOP ASSEMBLY
2 2.224	2GANG VARIABLE CONDENSER
3 1.445-5	I.F. TRANSFORMER
4 8.201-8	VOLUME CONTROL & SWITCH

PART NO.	DESCRIPTION
5 30.329	P.M. 4" SPEAKER
6 5.415-4	ELECTROLYTIC CAP. 40-40-20 MFD.
7 1.526	OSCILLATOR COIL
8 9.249-2	OUTPUT TRANSFORMER

DENOTES CONNECTIONS TO CHASSIS.
K = KILOHMS
ALL RESISTORS 1/4 WATTS AND ALL PAPER CAPACITORS 200 VOLTS UNLESS OTHERWISE MARKED.

I.F. = 455 KC.

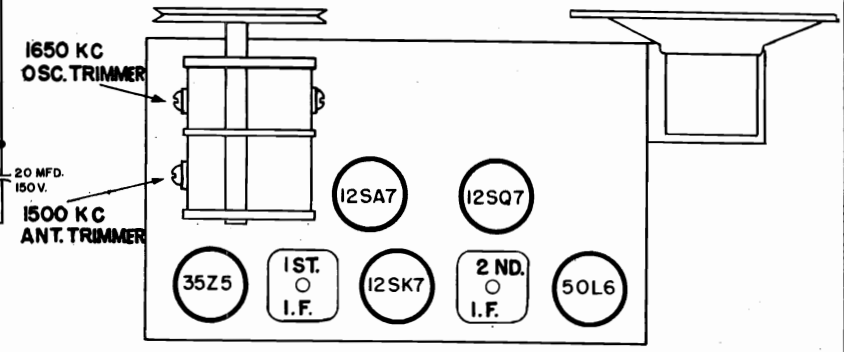

TRIMMER AND TUBE LOCATION DIAGRAM

ALIGNMENT: Should it become necessary at any time to check the alignment of this receiver, proceed as follows:

(1) Set the Signal Generator to 455 KC and connect to the stator lug on the rear section of the Variable Capacitor. Connect the Signal Generator Ground lead to the chassis. Connect a suitable output meter across the Speaker Voice Coil Connections. Turn the Volume Control to the maximum position. Turn the Variable Capacitor to the extreme clockwise position.

(2) Adjust the trimmers located at the top of the first and second I. F. Transformers or the iron cores located at the top and bottom of each I. F. for maximum output as indicated on the Output Meter.

(3) Loosely couple the Signal Generator lead to the Loop and set to 1650 KC.

(4) With Variable Capacitor set at the extreme clockwise position, tune in the 1650 KC signal by means of the Oscillator Trimmer on the Variable Capacitor (front section).

(5) Set the Signal Generator to 1500 KC and turn the Tuning Control so that this frequency is indicated on the dial. Adjust the Antenna Trimmer on the Variable Capacitor (rear section) for maximum output. No other adjustments are necessary.

LINE VOLTAGE: This receiver is designed for operation on 105-125 Volts, 50-60 Cycles, either Alternating or Direct Current (AC-DC).

POWER CONSUMPTION: 30 Watts.

TUNING RANGE: Broadcast: 540 to 1650 Kilocycles (180 to 555 meters).

DIAL: The Dial Scale is calibrated in Kilocycles times 10 to correspond with newspaper or periodical listings.

TUBES: The tubes used, and their functions, are as follows:

12SA7 Converter	12SQ7 Detector, Avc and Audio Amp.
12SK7 I.F. Amplifier	50L6 Beam Power Amplifier

35Z5 Rectifier

©John F. Rider

Compliments of www.nucow.com

MEISSNER T.R.F. BANDPASS TUNER
MODEL 4E

The Meissner Model 4E T.R.F. Bandpass Tuner is designed for superior high fidelity broadcast reception. It is specifically designed for custom installation and may be used in connection with a power amplifier and speaker system to fit a wide variety of installations ranging from the simplest home installation consisting of a low power amplifier and a speaker, to the largest high power installations designed to serve large auditoriums and consisting of one or more high power amplifiers and multiple speakers.

The Power Amplifier

The output impedance of the 4E Tuner is 100,000 ohms and should be worked into an amplifier having high impedance input. High impedance amplifiers usually have an input impedance of 500,000 ohms, but some have a lower impedance than this and the 4E may be worked into an impedance as low as 100,000 ohms with no appreciable loss of low frequencies or increase in distortion. An amplifier having provision for phonograph input from a crystal pickup is satisfactory for use with the 4E, but under no conditions should the 4E be worked into a microphone input channel. The relatively high output of the 4E would cause overloading and severe distortion in the microphone input stage and the hum level would be too high to be considered acceptable.

The Cabinet

One thing that should be observed in planning an installation is to use the normal precautions against microphonics. Since the 4E is a T.R.F. circuit and has no local oscillator, its tendency toward mocrophonism will be much less than in a similar superhet unit; but the 6AT6 audio amplifier tube may produce microphonics if subjected to severe vibration. This vibration may be transmitted through the cabinet or through the air from the speaker and the installation layout should be planned to avoid it.

The Record Player (or Changer)

The phonograph system of the 4E chassis is designed for use with crystal type pickups, and any record player or changer having this type pickup may be used. The following notes should be observed:

1. The record player frame must be connected to the tuner chassis in order to prevent hum pickup. In some record players the connecting lead from the phonograph pickup cartridge to the tuner chassis is a shielded lead with the shield connected to the pickup cartridge <u>and</u> to the record player frame. In this case the record player frame is automatically connected to the tuner chassis; but in record players which do not have this connection, a separate connecting lead between the record player frame and tuner may be used.
2. The record player motor may be plugged into the convenient outlet on the rear of the tuner chassis. A power switch must be provided on the record player to turn the motor on and off.
3. The connecting lead from the pickup cartridge must be provided with a miniature phonograph plug. The 4E chassis is shipped with a proper plug in the input jack for use on phono units not so equipped. The outer band or shield is connected to the shell of the plug, and the center wire is soldered in the pin of the plug.

©John F. Rider

Compliments of www.nucow.com

MODEL 4E

In circuits formerly employing a small value of fixed condenser across the output transformer as a permanent minimum tone control, it is desirable to cut this capacity to approximately one-half its former value when the 10-kc filter is added. Pentode amplifiers usually employ such condensers. Triode amplifiers seldom use such condensers, but if they do, it is well to reduce their value to half.

Alignment Procedure (use 200 uuf. dummy)

1. Using an F.M. Signal Generator and Oscilloscope:
Connect the vertical plates of the oscilloscope to the chassis and top of the volume control. Connect the horizontal plates to the sync terminals of the F.M. signal generator.
Set the dial of the tuner to 1,400 kc and the generator to 1,400 kc. using a sweep frequency of 400 cycles and deviation of about ±50 kc. Set the output of the generator to the least that will give a useful picture, connecting generator to antenna terminal.
Adjust the 4 trimmers at the top of the gang condenser to obtain a pattern of the greatest amplitude, reducing generator input as alignment proceeds, and at the same time adjusting the trimmers to give a double-humped pattern with humps of equal magnitude and with the center of the pattern centered on the scope.

2. Using an A.M. Signal Generator:
Connect the signal generator as usual, with an output meter as indicator connected to top of volume control or audio cable.
Set generator at 1,385 kc and tuner to 1,400 kc. Loosen the 4 trimmers on top of the gang and slowly tighten one at a time to obtain a maximum output reading. Keep each trimmer on the loose side of resonance until all trimmers are nearly peaked; then carefully peak each trimmer. Check alignment by slowly tuning generator to about 1,415 kc, during which the output meter should show a slight drop and then arise again. This alignment centers the response at 1,400 kc so that the dial calibration will be accurate. If the generator had been set at 1,400 kc initially, the center of the tuner's response would be below 1,400 kc on the tuner dial.

Resistance and Voltage Chart

Resistance between pin and chassis

Tube	Pin Number 1	2	3	4	5	6	7
6BA6 1st RF	2.1 meg.	0	*0-25	*0-25	**5 meg.	**5 meg.	470
6BA6 2nd RF	470K	0	*0-25	*0-25	**5 meg.	**5 meg.	470
6AT6 Detector	10 meg.	0	*0-25	*0-25	940K	147K	**5 meg.
6X4 Rectifier	240	Tie Point	*0-25	*0-25	Tie Point	240	**5 meg.

*Reading subject to position of hum balance control.
**Reading subject to variation depending upon the filter condensers.
CAUTION: Discharge filter condensers before making measurements.

Voltage between pin and chassis.
No signal condition.
Measurements to ground with 20,000 ohm/volt meter, 1,000 ohm/volt on AC

Tube	Pin Number 1	2	3	4	5	6	7
6BA6 1st RF	Sl.Neg.	0	*	*	200	132	3.5
6BA6 2nd RF	Sl.Neg.	0	*	*	200	132	3.9
6AT6 Detector	Sl.Neg.	0	*	*	Sl.Neg.	Sl.Neg.	85
6X4 Rectifier	185 VAC	Tie Point	*		Tie Point	185 VAC	237

*Reading will range from 0 to 6.3 volts AC depending on setting of hum control.

© John F. Rider

Compliments of www.nucow.com

MODEL 4E

Service Data

General

Power Supply 110-120 V 50-60 cycles.
Power Consumption 25 watts.
Undistorted Output 2 to 15 volts.
Replacement Part Numbers - as shown on circuit diagram
Circuit T.R.F. Bandpass.
Audio Frequency Response - flat ±2 db. 40 to 15,000 cycles.
Hum Output .002 volts.

Tubes:	6BA6 R.F. Amplifier	6AT6	Detector - Audio Amplifier
	6BA6 R.F. Amplifier	6X4	Rectifier

10-kc Filter

In the case where two strong broadcast signals are received on adjacent channels, a 10-kc beat note is formed by the two broadcast signals heterodyning together and when this happens a broad band, high fidelity receiver or tuner will pass this 10-kc beat note and produce an annoying high pitched whistle in the speaker.
The Meissner 10-kilocycle filter is designed to eliminate the 10-kc whistle between stations being received on high-fidelity radio installations. This filter has several points of superiority listed below:

1. It is placed in the output stage where it will not pick up hum voltages from filter chokes and power transformers, a common fault of high-impedance filter sections connected one or more stages ahead of the output tube.
2. It employs two filter circuits instead of the single circuit usually used, producing far greater attenuation of the 10-kc note than a single-section filter can produce.
3. It requires no tuning, being manufactured of close-tolerance circuit elements of fixed values.
4. Requires a minimum of space for the attenuation produced, both filter circuits being placed in the same can but shielded from each other.
5. Can be utilized efficiently in either pentode or triode circuits.
6. Works well with a single tube, or two identical filters usable for a push-pull stage.
7. Current-carrying capacity of 75 ma. permits it to be used in any receiver and in all but the very high power Public Address systems.

SINGLE TRIODE

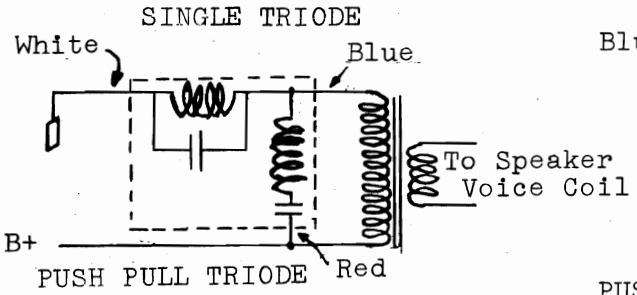

SINGLE PENTODE

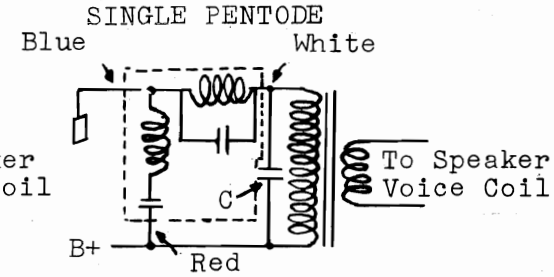

PUSH PULL TRIODE

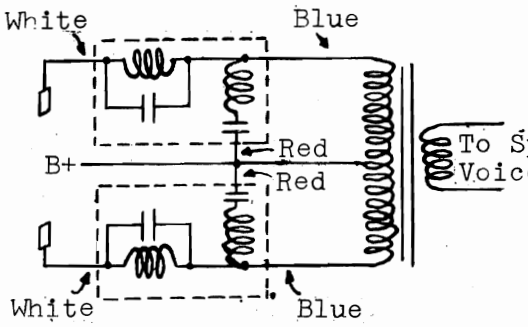

PUSH PULL PENTODE

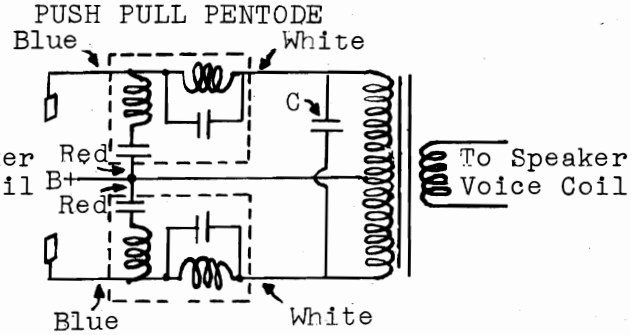

NOTE: C = approx. 1/2 original fixed tone control capacity.

©John F. Rider

Compliments of www.nucow.com

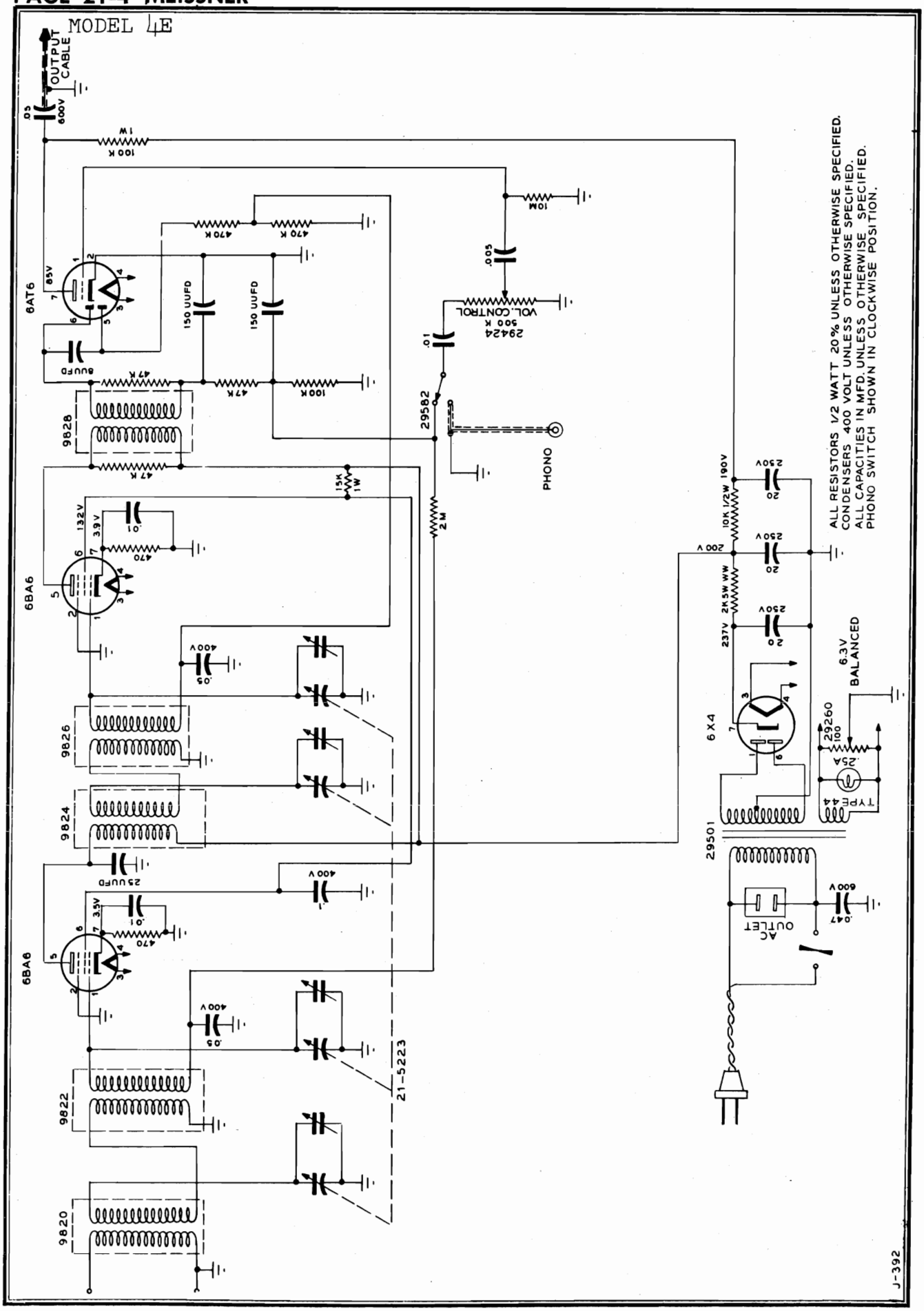

©John F. Rider

Compliments of www.nucow.com

Service Data

General:

Power Supply	110-120 V 50-60 cycles
Power Consumption	65 watts
Power Output	4 watts
AM I.F.	455 kc.
FM I.F.	10.7 mc.

Replacement part numbers - as shown on schematic diagram.

AM Alignment

I.F. 455 kc.
Align Ant. and Osc. Trimmers at 1400 kc.

FM Alignment

Alignment may be carried out with an unmodulated R.F. signal generator covering 10.7 mc. and 88 to 108 mc. and a high impedance DC voltmeter having a low range of 1 to 5 volts DC.

Connect the positive lead of the DC voltmeter to pin #1 of the 6AL5 detector tube, and the negative lead to pin #2 of the 6AL5. Apply an unmodulated 10.7 mc. signal to the grid of the second 6BA6 I.F. amplifier tube, through an .05 mfd. coupling condenser. Tune the bottom adjustment screw of the detector coil for maximum indication on the DC voltmeter. This completes this part of the adjustment.

Next, locate the 220 ohm resistor which is connected to the center lug of three lugs of the detector coil (on the side next to the 6AL5 socket). Connect the negative lead of the DC voltmeter to the junction of this 220 ohm resistor and the two 100 mmf. condensers on the tie lug near 6AL5. Connect positive lead of the voltmeter to chassis. With 10.7 mc. signal still applied to the grid of the second 6BA6, tune the top adjustment screw of the detector coil for a point of zero voltage. If more than a half turn adjustment was necessary in either of the preceding steps, then both of the adjustments should be repeated.

Connect negative lead of DC voltmeter to pin #2 of 6AL5.

Without changing the signal generator frequency, connect the 10.7 mc. signal across the FM converter coil (rear FM section of gang). Rotate tuning knob slightly to determine that receiver is not tuned to a harmonic of the generator. Adjust both top and bottom cores of FM I.F. transformers for maximum DC indication on the meter, keeping the signal level from the generator low enough so that this DC voltage does not exceed 5 volts.

R.F. alignment is carried out by setting signal generator to 108 mc. Connect generator to G and A2 antenna terminal through a 300 ohm dummy and adjust converter trimmer for maximum DC indication. Tune generator to 88 mc. and adjust converter coil by squeezing or spreading turns for maximum DC indication. There is some pulling between oscillator and converter, so the tuning control should be rocked slightly as these adjustments are made. The oscillator trimmer and coil should not be adjusted unless the receiver is noticeable off calibration.

©John F. Rider

Compliments of www.nucow.com

MODELS 9AJ, 9AJ-1

Voltage Chart 9AJ

Tube	Pin Number 1	2	3	4	5	6	7	8	9 &
6BA6 FM RF	0	0	0	6.3AC	52*	94*	1*		
12AT7 FM Conv. Osc.	105*	Sl.Neg.	0	6.3AC	6.3AC	106*	0	1.4*	0
6BE6 AM Conv. Osc.	-6.8	0	0	6.3AC	95	95	Sl.Neg.		
6BA6 IF	Sl.Neg.	0	0	6.3AC	105	105	1		
6BA6 FM Driver	0	0	0	6.3AC	102	102	1		
6AL5 Ratio Det.	Sl.Pos.	Sl.Neg.	0	6.3AC	Sl.Pos.	0	Sl.Pos.		
6AT6 Det. AF	-0.3	0	0	6.3AC	Sl.Neg.	Sl.Neg.	57		
6V6 Power Amp.	0	0	245	258	0	57	6.3AC	13.5	
5Y3 Rectifier	0	272	117AC	265AC	0	265AC	0	272	

DC voltages with 20,000 ohm/volt meter, 117V AC line, switch in AM pos. except * in FM.
AC voltages with 1,000 ohm/volt meter. Voltage from pin to chassis.

RESISTANCE CHART 9AJ

Tube	Pin Number 1	2	3	4	5	6	7	8	9
6BA6 FM RF	0	0	0	0	100K*	100K*	68		
12AT7 FM Conv.Osc.	130K	10K	0	1	1	130K*	0	560	0
6BE6 AM Conv. Osc.	22K	0.5	0	0	150K*	150K*	2.5M		
6BA6 IF	1M	0	0	0	150K*	150K*	68		
6BA6 FM Driver	1	0	0	0	150K*	150K*	68		
6AL5 Ratio Det.	6.8K	6.8K	0	0	∞	∞	∞		
6AT6 Det. AF	10M	0	0	0	1.5M	500K	225K*		
6V6 Power Amp.	0	0	250K*	250K*	500K	225K*	0	330	
5Y3 Rectifier	∞	250K*	∞	80	∞	100	∞	250K*	

*Subject to variation depending on condition of filter condensers. Readings on 6BA6 RF and 12AT7 with switch in FM pos.
K= 1,000
M= 1,000,000

9AJ1 VOLTAGE CHART 117 V Line

Pin Number	1	2	3	4	5	6	7	8	9
6BA6 FM RF	0	0	0	6.3AC	85	85	1		
12AT7 FM osc.-Conv.	98	-.2	0	6.3AC	6.3AC	96	0	1.3	0
Above readings in FM position									
6BE6 AM Conv.	-7	0	0	6.3AC	95	95	0		
6BA6 AM FM IF	0	0	0	6.3AC	102	102	1		
6BA6 FM IF	0	0	0	6.3AC	103	103	1		
6AL5 Ratio Det.	0	0	0	6.3AC	0	0	0		
6AT6 Det. Audio	0	0	0	6.3AC	0	0	56		
6V6 Power Amp.	0	0	255	196	0	56	6.3AC	11	
5Y3 Rectifier	0	272	117AC	280AC	0	280AC	0	272	

DC Readings 20,000 ohms/v meter - voltages from tube pin to chassis.
AC Readings 1000 ohms/volt.

©John F. Rider

Compliments of www.nucow.com

MODELS 9AJ, 9AJ-1

9AJ1 RESISTANCE CHART

Pin Number	1	2	3	4	5	6	7	8	9
6BA6 FM RF	0	0	0	0	280K*	280K*	68		
12AT7 FM Osc.-Conv.	280K*	10K	0	1 ohm	1 ohm	280K*	0	560	0
Above readings in FM position									
6BE6 AM Conv.	22K	.5 ohm	0	0	280K*	280K*	2.5M		
6BA6 AM FM IF	1.6M	0	0	0	280K*	280K*	68		
6BA6 AM IF	1 ohm	0	0	0	280K*	280K*	68		
6AL5 Ratio Det.	6.8K	6.8K	0	0	∞	∞	∞		
6AT6 Det. Audio	10M	0	0	0	1.5M	500K	500K*		
6V6 Power Amp.	0	0	250K*	250K*	500K	500K*	0	330	
5Y3 Rectifier	∞ *	250K*	∞	100	∞	100	∞	250K*	

*Resistance reading subject to wide variation depending on condition of filter cpaacitor.

K - 1000
M - 1,000,000

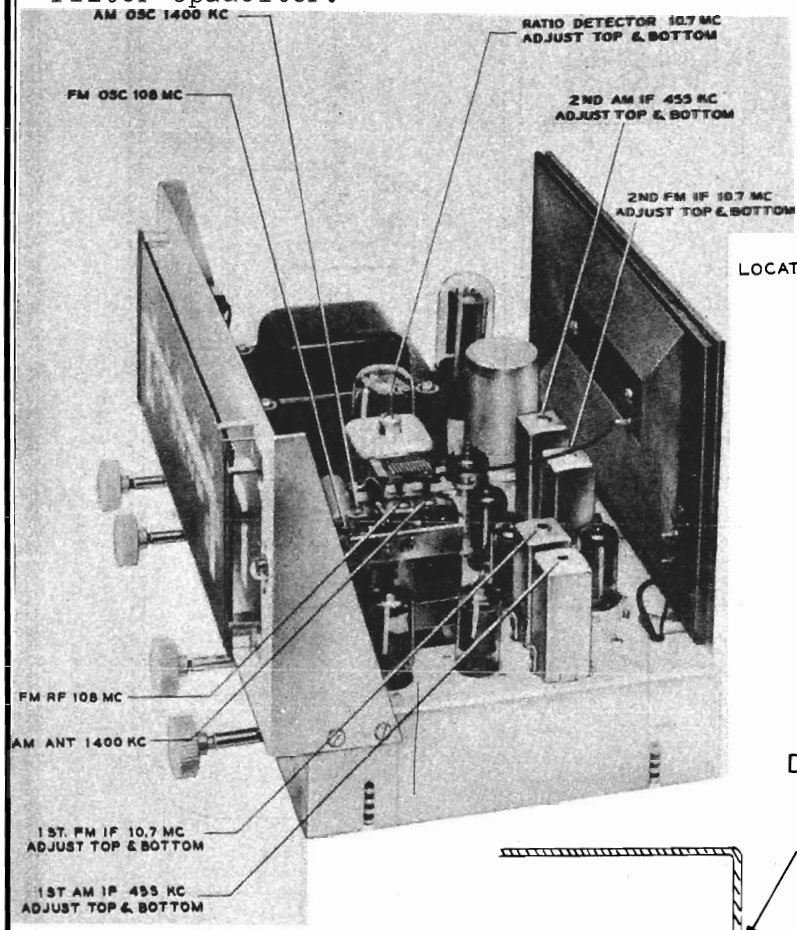

LOCATION OF TUNING ADJUSTMENTS

DETAIL OF RUBBER MOUNTING
J-385

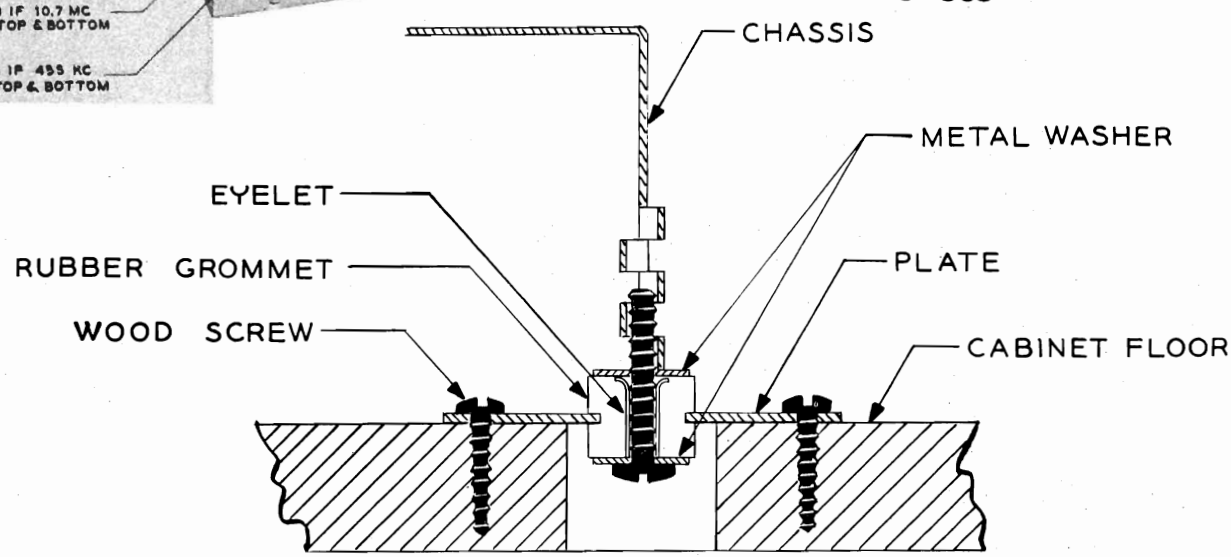

©John F. Rider

Compliments of www.nucow.com

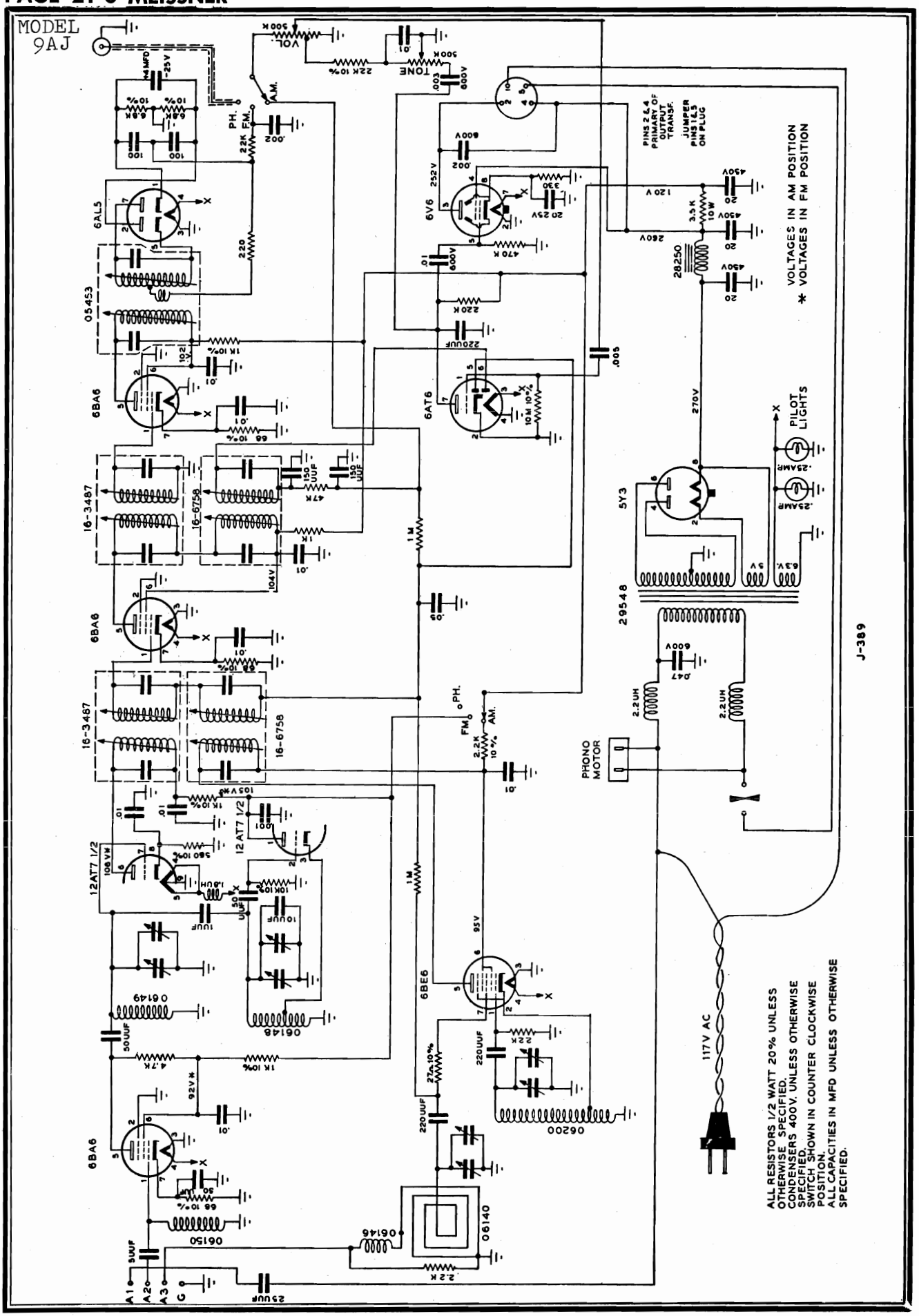

John F. Rider

Compliments of www.nucow.com

MODEL 9AJ-1

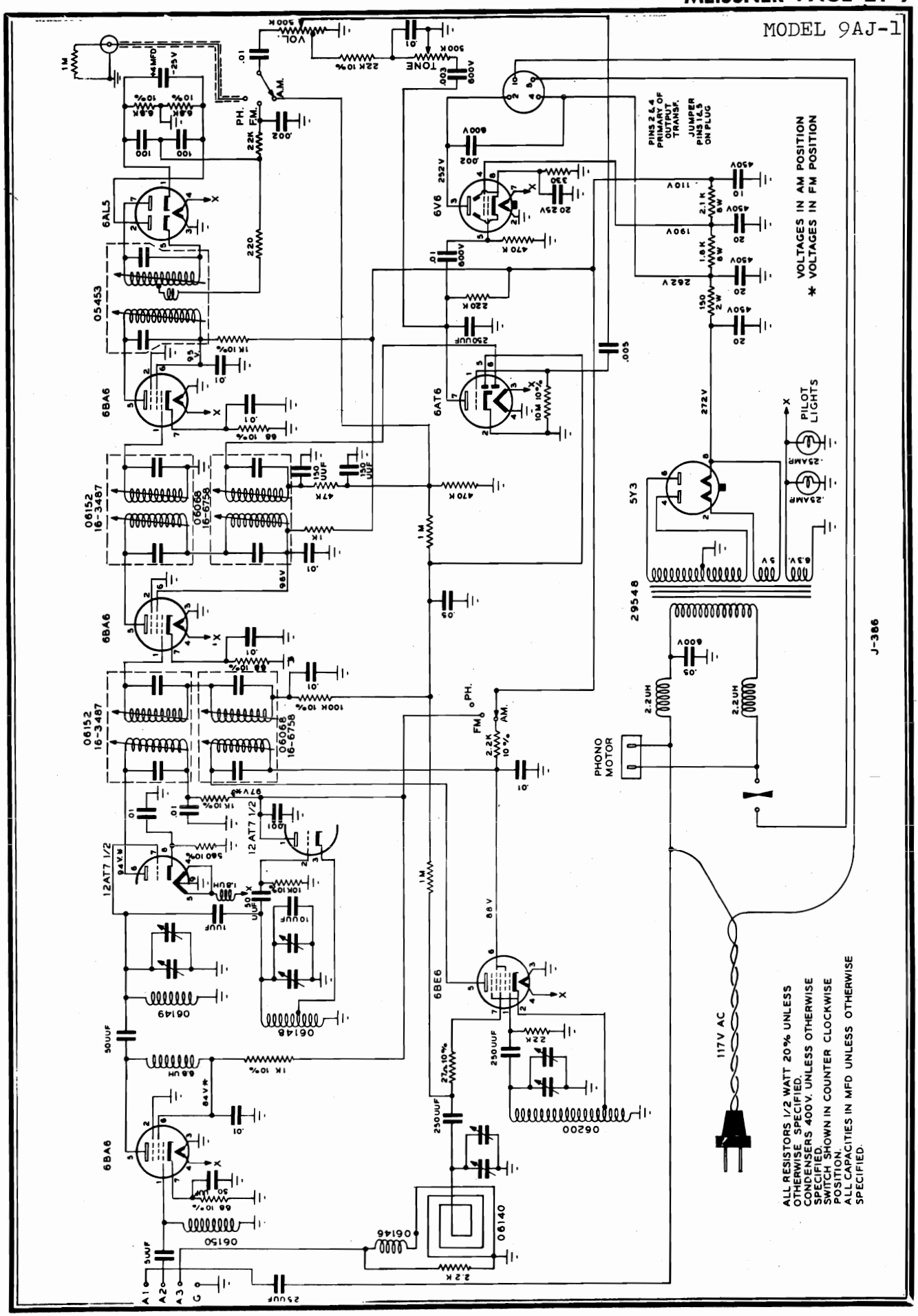

©John F. Rider

Compliments of www.nucow.com

MODEL 8BT

Power Amplifier

The output impedance of the 8BT tuner is 220,000 ohms and should be worked into an amplifier having high impedance input. High impedance amplifiers usually have an input impedance of 500,000 ohms, but some have a lower impedance than this, and the 8BT may be worked into an impedance as low as 250,000 ohms with no appreciable loss of low frequencies or increase in distortion. An amplifier having provision for phonograph input from a crystal pickup is satisfactory for use with the 8BT, but under no conditions should the 8BT be worked into a microphone input channel. The relatively high output of the 8BT would cause overloading and distortion in the microphone input stage and the hum level would be too high to be considered acceptable.

SERVICE DATA

General:

Power Supply	110-120 V 50-60 cycles
Power Consumption	40 watts
Output	1 to 15 volts
AM I.F.	455 kc
FM I.F.	10.7 mc

Replacement part numbers - as shown on schematic diagram.

AM Alignment

I.F. 455 kc.
Align Ant. and Osc. Trimmers at 1400 kc.

FM Alignment

Alignment may be carried out with an unmodulated R.F. signal generator covering 10.7 mc. and 88 to 108 mc. and a high impedance DC voltmeter having a low range of 1 to 5 volts DC.

Connect the positive lead of the DC voltmeter to pin #1 of the 6AL5 detector tube, and the negative lead to pin #2 of the 6AL5. Apply an unmodulated 10.7 mc signal to the grid of the second 6BA6 I.F. amplifier tube, through an .05 mfd. coupling condenser. Tune the bottom adjustment screw of the detector coil for maximum indication on the DC voltmeter. This completes this part of the adjustment.

Next, locate the 220 ohm resistor which is connected to the center lug of the detector coil (on the side next to the 6AL5 socket). Connect the negative lead of the DC voltmeter to the junction of this 220 ohm resistor and the two 100 mmfd. condensers on the tie lug near 6AL5. Connect positive lead of the voltmeter to chassis. With 10.7 mc. signal still applied to the grid of the second 6BA6, tune the top adjustment screw of the detector coil for a point of zero voltage. If more than a half turn adjustment was necessary in either of the preceding steps then both of the adjustments should be repeated.

Connect negative lead of DC voltmeter to pin #2 of 6AL5.

Without changing the signal generator frequency, connect the 10.7 mc. signal across the FM converter coil (rear FM section of gang). Rotate tuning knob slightly to determine that receiver is not tuned to a harmonic of the generator. Adjust both top and bottom cores of FM I.F. transformers for maximum DC indication on the meter, keeping the signal level from the generator low enough so that this DC voltage does not exceed 5 volts.

R.F. alignment is carried out by setting signal generator to 108 mc. Connect generator to G and A2 antenna terminal through a 300 ohm dummy and adjust converter coil by squeezing or spreading turns for maximum DC indication. There is some pulling between oscillator and converter, so the tuning control should be rocked slightly as these adjustments are made. The oscillator trimmer and coil should not be adjusted unless the receiver is noticeably off calibration.

©John F. Rider

Compliments of www.nucow.com

Resistance Chart 8BT

Tube	Pin Number 1	2	3	4	5	6	7	8	9
6BA6 FM RF	0	0	0	0	500K*	500K*	68		
12AT7 FM Conv. Osc.	500K*	10K	0	1	1	500K*	0	560	0
6BE6 AM Conv. Osc.	22K	0.5	0	0	500K*	500K*	2.5M		
6BA6 IF	1M	0	0	0	500K*	500K*	68		
6BA6 FM Driver	0.5	0	0	0	500K*	500K*	68		
6AL5 Ratio Det.	6.8K	6.8K	0	0	Inf.	Inf.	Inf.		
6AT6 Det.AF	10M	0	0	0	1.5M	500K*	500K*		
6X5 Rectifier	0	0	250	Inf.	250	Inf.	0	500K*	

* Subject to variation depending on condition of filter condensers.
Readings on 6BA6 FM RF and 12AT7 with switch in FM pos.
k = 1000 M = 1,000,000

Voltage Chart

Tube	Pin Number 1	2	3	4	5	6	7	8	9
6BA6 FM RF	0	0	0	6.3AC	57	97	1		
12AT7 FM Conv. Osc.	106	Sl. Neg.	0	6.3AC	6.3AC	104	0	1.2	0
6BE6 AM Conv. Osc.	-6.8	0	0	6.3AC	96	96	Sl. neg.		
6BA6 IF	Sl.Neg.	0	0	6.3AC	108	108	1		
6BA6 FM Driver	0	0	0	6.3AC	102	102	1		
6AL5 Ratio Det.	Sl.Pos.	Sl.Neg.	0	6.3AC	0	0	Sl.Pos.		
6AT6 Det. AF	-.5	0	0	6.3AC	Sl.Neg.	Sl.Neg.	57		
6X5 Rectifier	0	0	180AC	117AC	180AC	0	6.3AC	200	

117V AC line, switch in AM position except 6BA6 FM RF and 12AT7.

DC readings with 20,000 ohm/volt meter, AC readings 1000 ohm/volt.

©John F. Rider

Compliments of www.nucow.com

MODEL 8BT

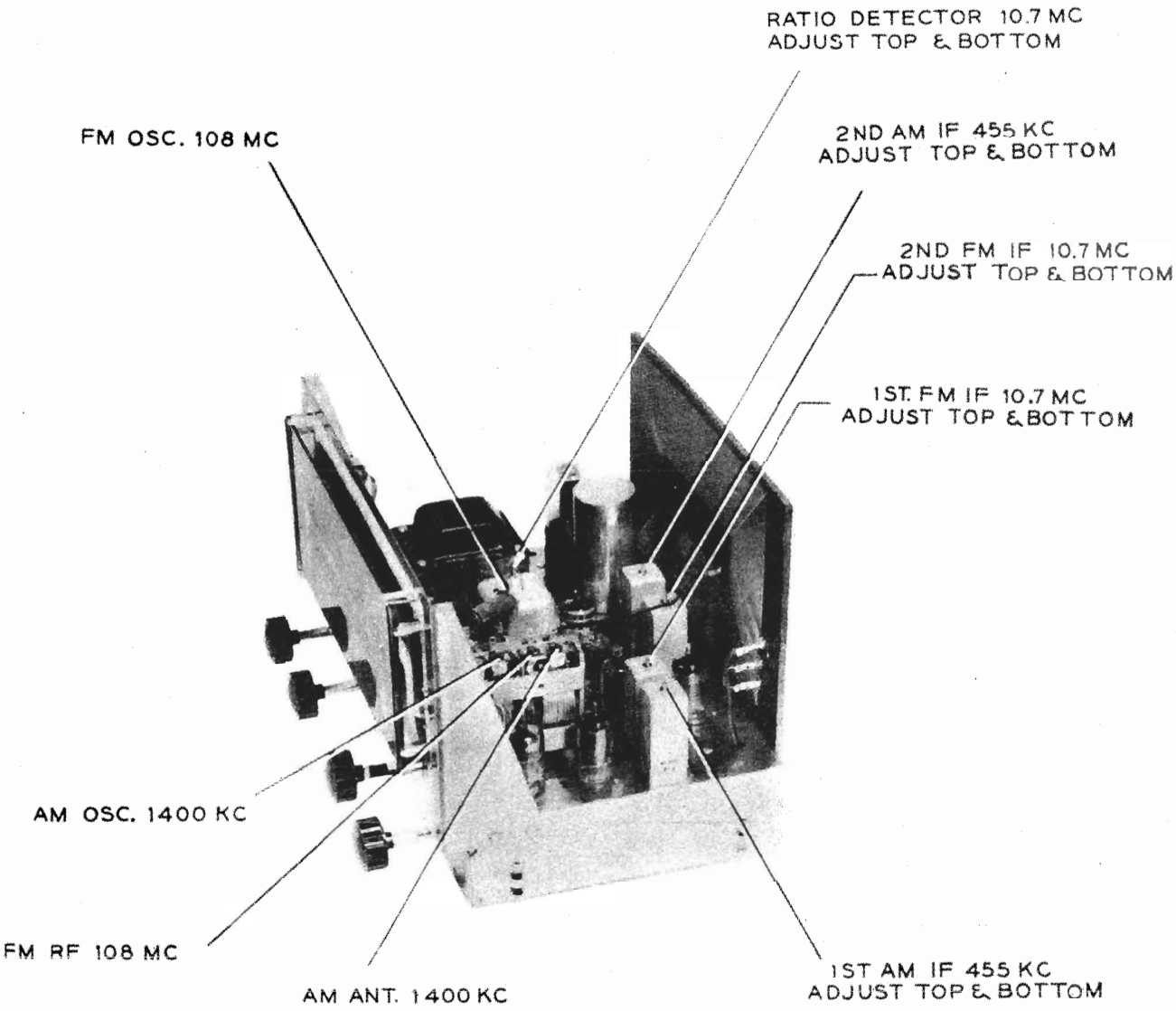

LOCATION OF TUNING ADJUSTMENTS

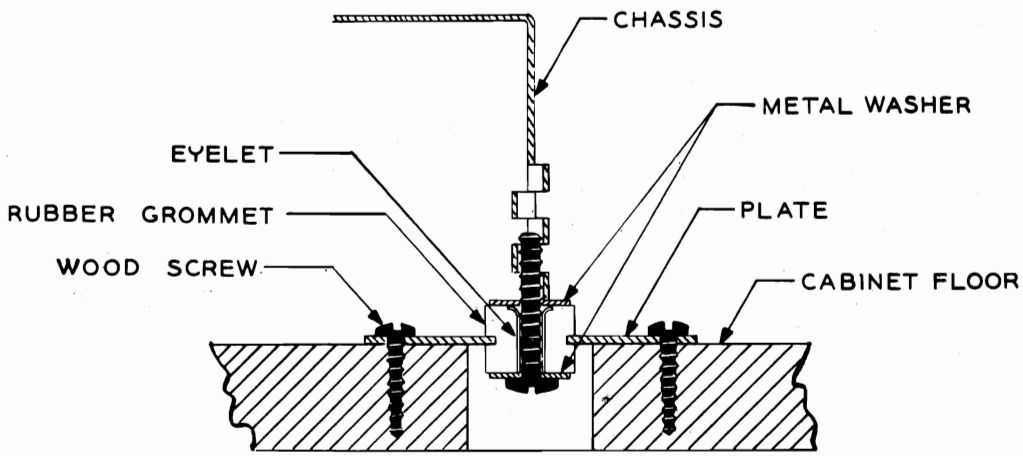

DETAIL OF RUBBER MOUNTING

©John F. Rider

Compliments of www.nucow.com

MODEL 8BT

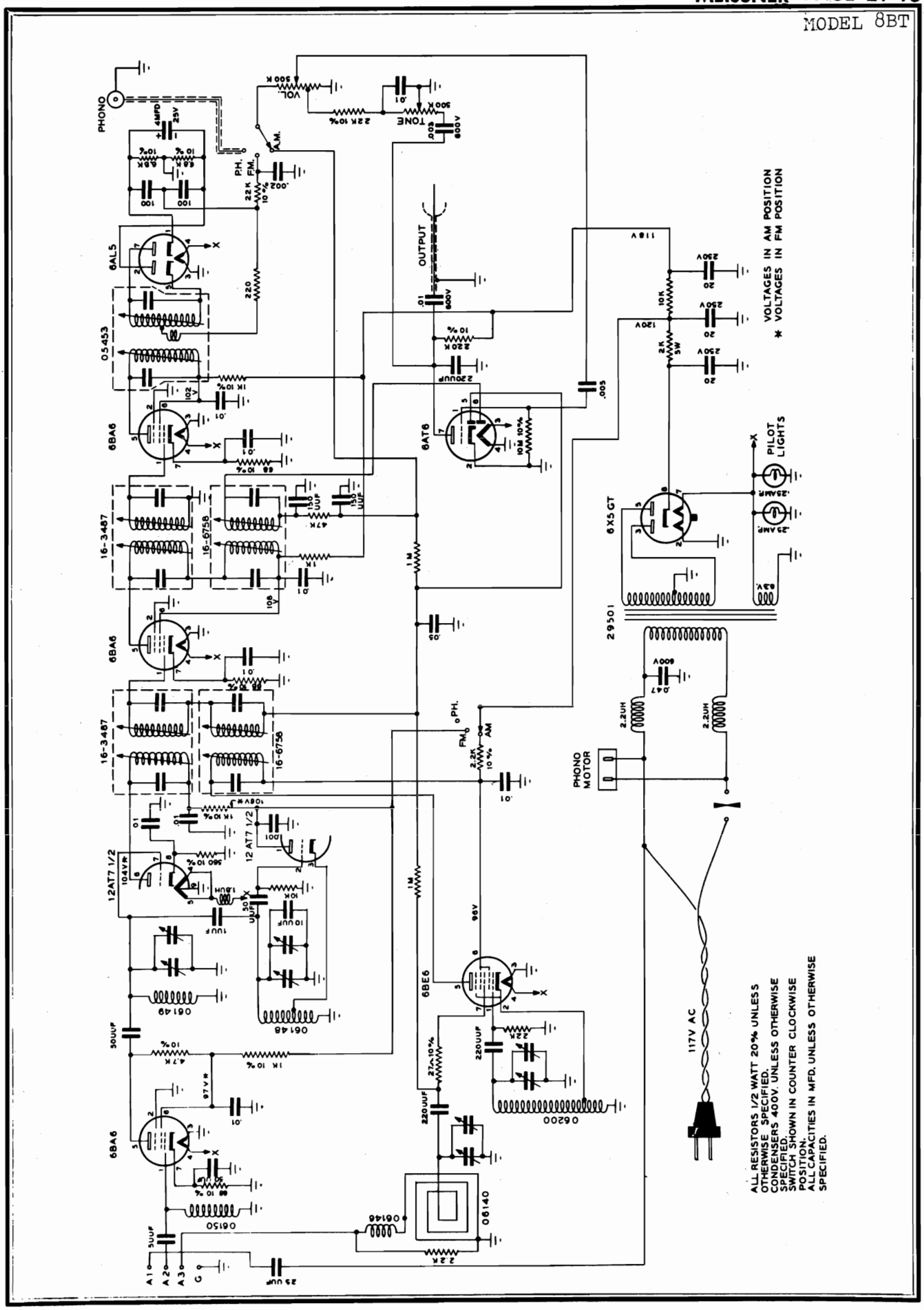

© John F. Rider

Compliments of www.nucow.com

Compliments of www.nucow.com

MODEL TK16,
Ch. KC-16

SPECIFICATIONS

Power Requirement: 120 volts, 50 to 60 cycles, 110 watts.
Frequency Coverage:
Band A–540 to 1600 KC, AM
Band B–1.6 to 4.7 MC
Band C–4.7 to 10 MC
Band D–11 to 22 MC
Band E–88 to 108 MC, FM
Audio Sensitivity: .02 volts for ½ watt output.
Maximum Undistorted Audio: 10 watts.
AM Sensitivity: 2 to 4 microvolts.
FM Sensitivity: 20 microvolts, quieting signal.
5 microvolts, minimum signal.

Tube Complement:

RF	6BA6	FM Detector	6AL5
Mixer	12AT7	1st AF	6C4
Oscillator	12AT7	2nd AF	6C4
1st IF	6BA6	Phase Inv.	6C4
2nd IF	6BA6	AF output, two	6V6GT
AM Detector	6AL5	Rectifiers, two	5Y3GT
3rd IF, FM	6BA6	Tuning Ind.	6U5

INSTALLATION

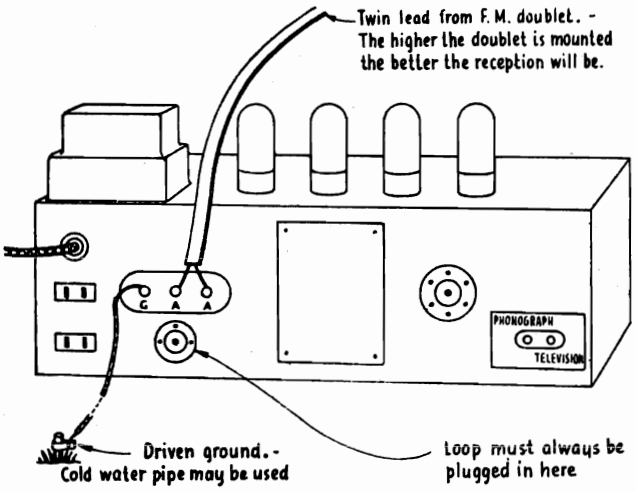

PRECAUTIONS. Be sure that the speaker and Magna Tenna Loop are plugged in, also the flexible dipole leads must be connected to screw strip at "A–A". A ground wire may be connected to "G" but it is usually not needed. See that all tubes are seated and light up.

The next step to select the type of entertainment you wish is to turn the **SELECTOR.** The pointer has seven positions: **TV, PH, A, B, C, D** and **E.** The letters represent television adaptor, phonograph, and radio bands A–Standard American Broadcast, BCD–short wave bands and E–FM Broadcast.

The push buttons are for your convenience in selecting stations without the bother of making the exact tuning adjustments necessary for best reception. There are seven buttons and each button may be set for a station at any point on the dial. We do not recommend the use of the push buttons for short wave stations. To set the push buttons this exact procedure should be followed. A screwdriver will be needed.

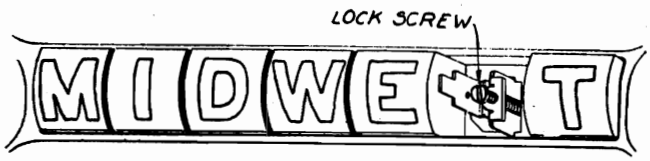

1. Turn on the receiver and allow ten minutes to warm up.
2. Remove the push button by pulling straight out. A hooked instrument will be of assistance.
3. Loosen the **LOCK SCREW** at least one half turn.
4. Using the screwdriver with the blade in the screw slot, push the mechanism in firmly. Hold in during step 5. The mechanism may bind at first and you must use sufficient force to break it loose so that the push buttom and **TUNING** control wheel are independent, that is, the **TUNING** control does not try to push the button mechanism outward when the pointer is tuned across the dial.
5. Tune the pointer past the desired station, then back to the desired station and make the tuning adjustment as carefully as you know how.
6. Tighten the **LOCK SCREW.**
7. Check the setting of this push button by tuning away from the station manually then push the button down firmly maintaining pressure until the pointer moves to the position it had when the **LOCK SCREW** was tightened. If the station is not tuned in perfectly repeat steps 2 to 6 carefully.

OPERATION

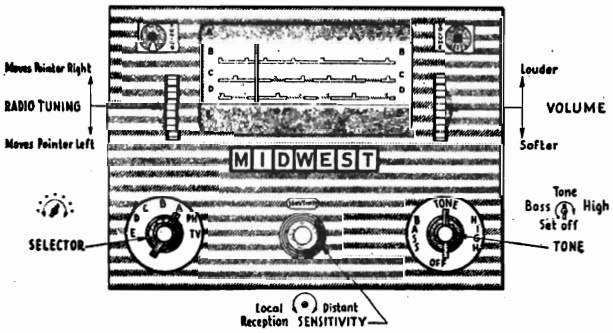

8. Adjust each of the seven buttons, or as many as you need, exactly as outlined above.

Any button can be set for any pointer position, however, you will find it more desirable to select the button nearest the pointer position so that each button may be more easily identified with the station. For example, the "M" button will be set for a station at the left of the dial, the "W" button will be set for a station near the center, etc.

©John F. Rider

Compliments of www.nucow.com

MODEL TK16,
Ch. KC-16

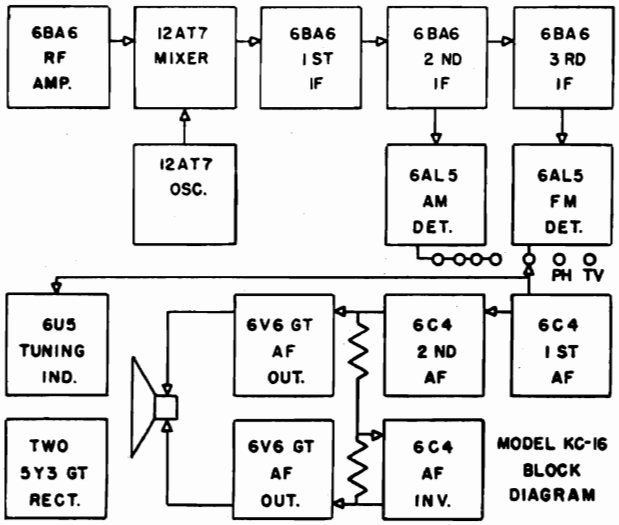

MODEL KC-16 BLOCK DIAGRAM

ALIGNMENT

The alignment points are shown on the top and bottom views of the chassis as well as certain part numbers.

AM IF should be aligned at 456 KC. There are three transformers and six adjustments, the transformers are coupled with less than critical coupling and there is only one peak. Couple the generator into the mixer grid and use either AVC or audio for the output meter.

FM IF should be aligned at 10.7 MC. There are four transformers and eight adjustments, the transformers are over-coupled and must be aligned with a scope and sweep generator.

1. Connect generator to 3rd IF grid and vertical input of scope to the audio of the receiver at any point where sufficient signal is available and phasing can be properly adjusted.
2. Adjust the top screw for greatest length of straight line. This is the secondary winding, the bottom screw should give improvement in signal level.

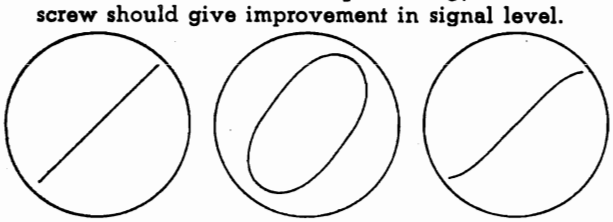

A B C

A does not have the hook indicating that the sweep generator has a greater deviation than the detector capability.

B shows improper phasing of the horizontal sweep with the audio output of the receiver.

C is preferred because it shows the limits of deviation and you obtain it simply by adjusting the deviation (sweep width) control on the signal generator. Approximately 150 KC is normal.

3. Connect generator to 2nd IF grid and adjust the 2nd IF slugs for maximum signal **and** band width. This you can be sure of by the amount of hook at the ends of the line on the scope. Repeat this procedure for 1st IF grid and mixer grid. Adjust for greatest signal without appreciable loss of band width.

Alternate Method: The IF response of the 1st, 2nd and 3rd transformer may be observed more directly if you use a crystal detector at the plate of the tube following the transformer and feed the vertical plates of the scope from that point. Feed signal into grid of tube preceding transformer. Use a CW marker at 10.7 to be sure the double peaked response curve straddles the ratio detector response. Observe each stage separately.

Notice: Do not use AM or CM signal to peak the FM transformers. Regeneration may result and bandwidth and noise rejection will be poor, although signal strength will increase.

FM RF should be trimmed at 105 MC. There should not be any reason to adjust the low end but if this is necessary it can be done by distorting the FM coils on the tuning gang.

AM RF should be peaked at the high end with the trimmer and at the low end by core adjustment.

Notice: Use as low signal input as possible for readable output indication. Feed signal in from FM RF generator through 150 ohms in each lead to "A-A." Use 400 ohms in lead from AM RF generator and connect to either "A" terminal.

A very convenient design is shown here schematically of a Crystal probe for detection of resonant response for display on the oscillograph and your available materials will decide the physical design, most important feature is the ability to change the load resistor, R.

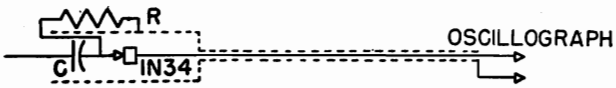

The value for C is limited by the physical size, any capacity greater than 100 mmfd will be satisfactory, the value of R should be 470 ohms when the probe is used in the IF stages to obtain the response of the grid circuit with 470 ohms in plate in place of the tuned plate circuit whereas a value of 470K ohms is alright for general use.

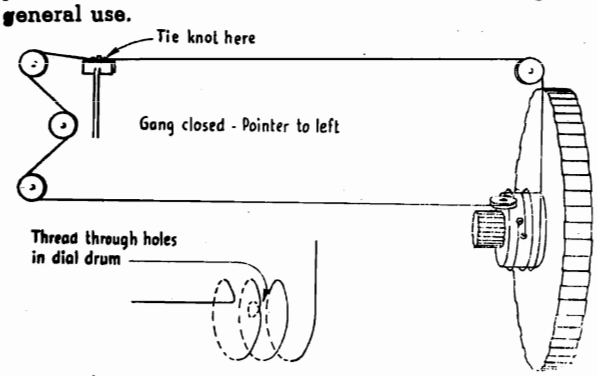

For dial stringing use a light weight dial cord such as Bevin-Wilcox 6-18 Imperial silk cord.

Radio Band	Coil Adj.	Trimmer Adj.
A	560 KC	1500 KC
B	1.6 MC	4.7 MC
C	5 MC	10 MC
D	11.5 MC	22 MC
E	.....	105 MC

If replacement parts of identical manufacture and rating are not available for service repairs these should be ordered from Midwest Radio & Television Corporation, giving model number and serial number of the chassis and name of the part.

Repair data for the record changer mechanism is available separately, please specify Model.

©John F. Rider

Compliments of www.nucow.com

MODEL TK16,
Ch. KC-16

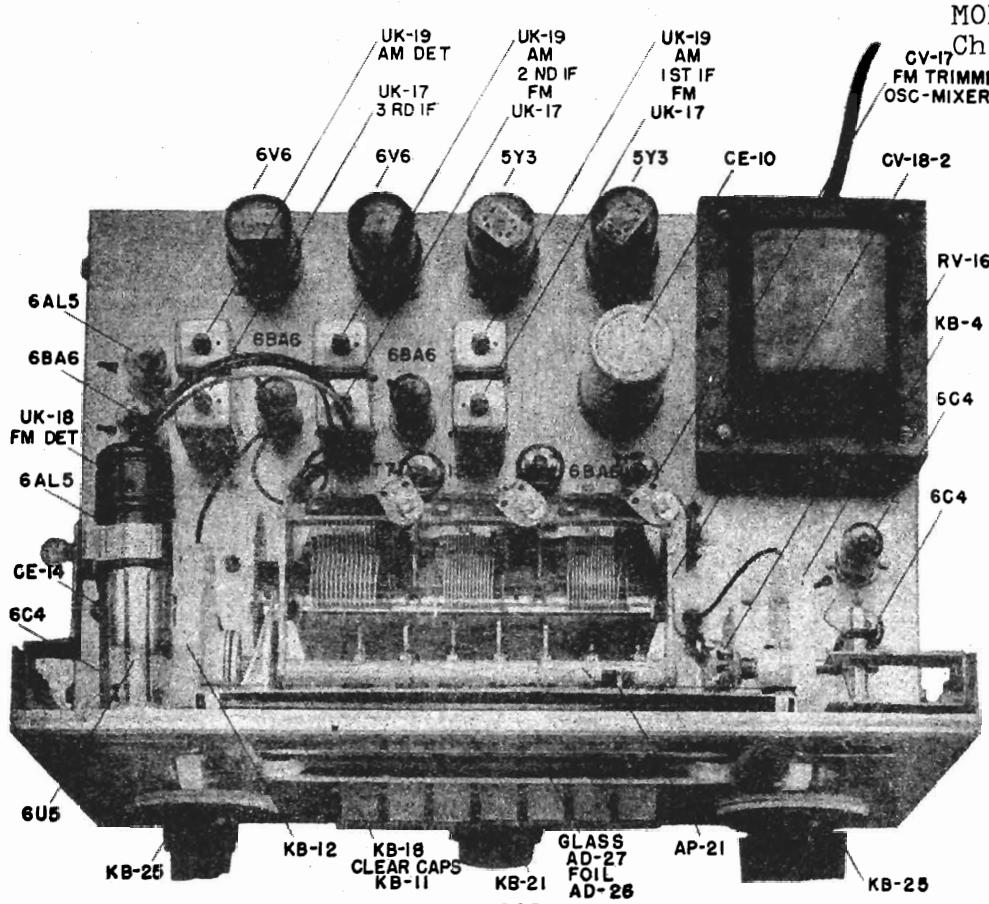

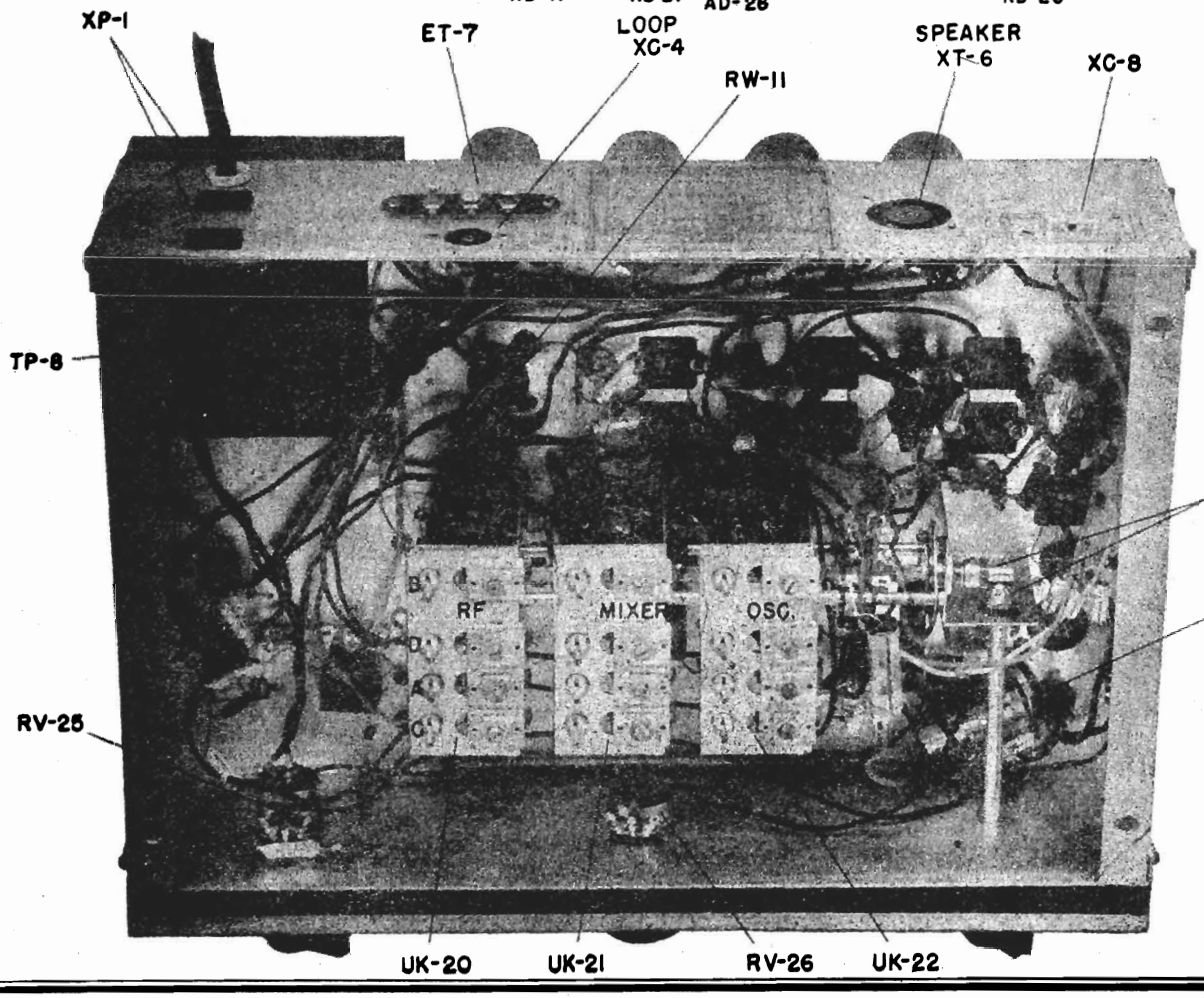

©John F. Rider

Compliments of www.nucow.com

MODEL TK16,
Ch. KC-16

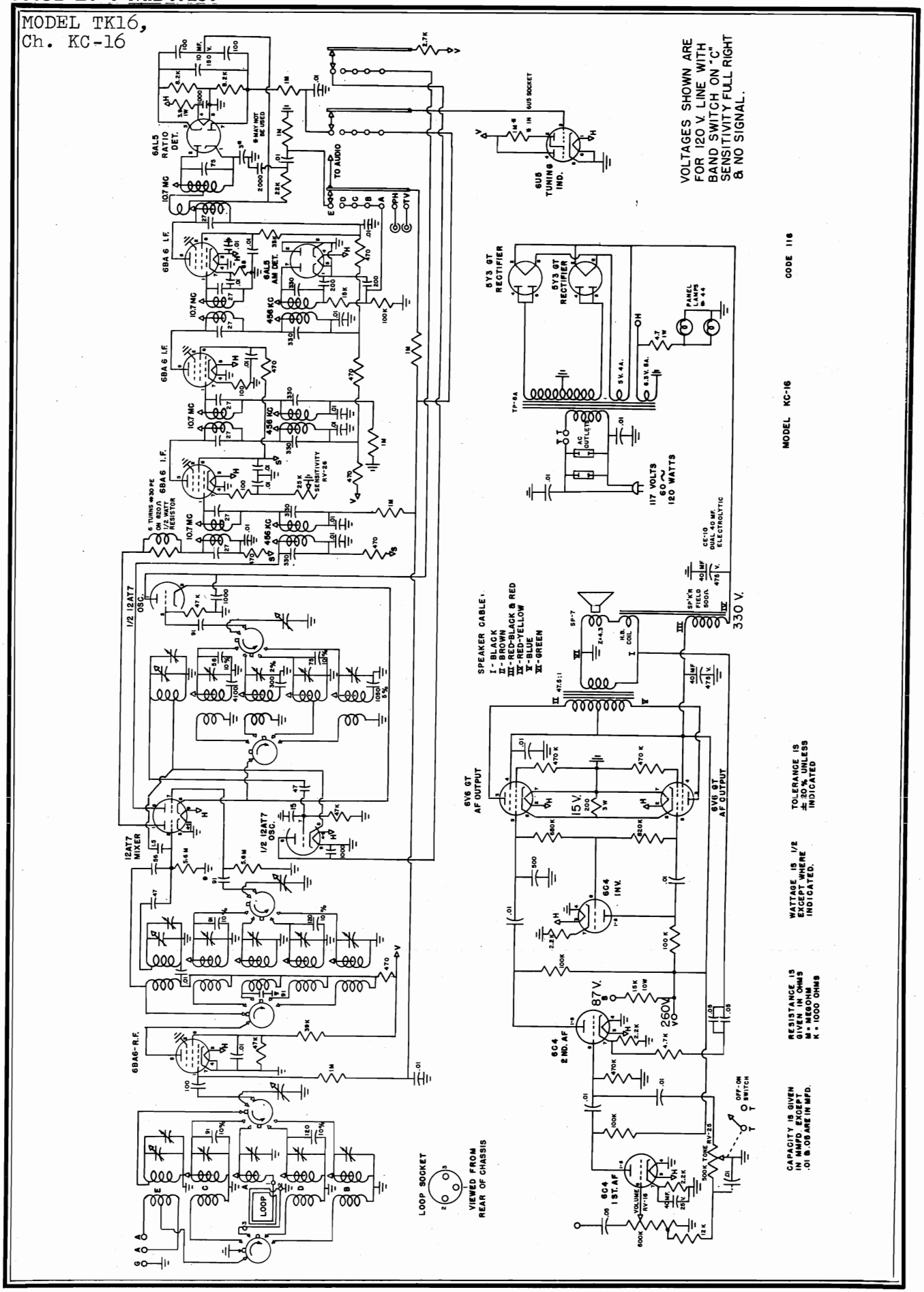

© John F. Rider

Compliments of www.nucow.com

MODEL TK16,
Ch. KC-16

During Early production the following changes have been made.

1. The ground end of the padder on the "C" band, in the oscillator plate must return to ground lug on the coil plate near the "C" trimmer. This is done to prevent coupling into the "D" band.

2. There should be an additional .01 condenser from the 1st IF grid return to the saddle of the 6V6 socket. This is added to reduce regeneration.

3. There should be an additional .01 condenser from the screen supply end of the 15K dropping resistor to a ground on the saddle of the 5Y3 socket. To reduce regeneration.

4. The .01 ground return of the capristor at the B+ side of the 1st AM IF transformer may retutn to the ground on the saddle of the 5Y3 socket. To reduce regeneration.

5. The blue plate lead on the AM section of the triode mixer must be dressed away from the grid pin of that section. To reduce regeneration.

6. The RF stage may regenerate on FM. The cure is to ground the 6BA6 RF tube suppressor separately, to the front of the socket; solder the wire to the chassis if the socket does not have the saddle below the chassis.

7. Four ceramic B+ decoupling condensers should be replaced by paper condensers of .01 MFD capacity and 600 volts rating. These are in the IF B+ lead string and one in the mixer coil plate.

8. Remove ceramic .01 MFD condensers at the 3rd 6BA6 IF screen, at the 1st 6BA6 IF screen and at the terminal feeding mixer plate voltage to the 1st IF transformers. Replace with .01MFD ceramic disc capacitors.

9. The black wire used to ground the arm of the tone control should be connected <u>directly</u> to the 6C4 socket ground. To reduce hum.

10. To prevent overload on strong local FM Stations the grid return of the 2nd IF grid should be made directly to ground instead of through the .01-1 meg capristor.

11. To prevent regeneration in the "C" band, in addition to revision 4, add a 1000 mmf disc condenser from B+ side of 1st AM, IF transformer to ground on the mounting foot of the adjacent terminal strip.

©John F. Rider

Compliments of www.nucow.com

Compliments of www.nucow.com

CONNECTING THE SET

POWER SUPPLY. This receiver is designed to operate on an alternating current supply (AC) ranging from 110 to 120 volts, 60 Cycles only. *Do Not Operate on Direct Current.*

Before connecting the set be sure that your house is wired for the voltage and current for which the set is designed. If in doubt, call your local power company for the necessary information. Connecting the set to a supply outlet furnishing the wrong type of current will result in improper operation or damage.

ANTENNA. This receiver has a built-in "loop" aerial. Its excellent design is such as to increase pick-up from stations having wide variations in signal strength. The efficiency and selectivity of the loop provide outstanding reception without the use of an external aerial.

TUBES. Five tubes (including rectifier) are used. Type numbers and locations are shown in the tube location diagram on the bottom of the cabinet.

GROUND. No ground connection should be used when operating this receiver. The receiver gets its ground connection through the power line and any external connection to the chassis may cause a short circuit and consequent damage.

CAUTION. Do not place receiver on hot objects such as stoves, radiators, etc. Heat will damage the cabinet and the internal components of the receiver.

RADIO OPERATION

AUTO-OFF-ON SWITCH KNOB (Bottom of Clock Face). Turn this knob to the right (clockwise), so that the indicator points to "ON", to turn on the radio. To turn off the radio, turn this knob so that the indicator points straight up to "OFF".

VOLUME CONTROL KNOB (Bottom Knob on Front of Cabinet) This knob controls the volume of the signal received. To reduce the volume, rotate this knob to the left (counter-clockwise). When this knob is rotated to the right it will increase the volume.

STATION SELECTOR KNOB. (Large Knob on Front of Cabinet) Rotate this knob over a narrow range of the dial where the desired station is located, until the station is received with maximum volume and clarity. Then readjust the volume control to the proper level. NEVER use the station selector knob to adjust the volume as this will result in the signal being received with distorted tone quality.

The station selector knob is calibrated in Kilocycles with the last zero of the actual frequency omitted. For instance, the numeral 55 on the knob indicates 550 Kilocycles and 160 indicates 1600 Kilocycles.

OPERATION OF CLOCK

This clock-radio is equipped with a self-starting clock. As soon as the power plug is inserted into the wall outlet, the sweep second hand will begin to operate.

To set the time hands, rotate the knob located at the rear of the receiver so that the hands will rotate in a clockwise rotation. Once the clock is set, it needs no further attention unless you remove the plug or there is a power interruption.

The clock of this clock-radio is equipped to automatically turn on the radio at any time during the course of approximately 10-½ hours after the controls are properly set. The controls may be properly set by following the instructions itemized below:

1. SET TURN-ON TIME. Pull out and turn the knob at the top of clock face to the left (counter-clockwise) until the selected TURN-ON time is indicated on the small center dial by the small pointer on the opposite end of the hour hand.

   Leave this knob out if you wish the conventional alarm to turn on in addition to the radio. The conventional alarm will sound approximately seven minutes after the radio is turned on.

   If you prefer to have the radio turned on without the conventional alarm, push the knob in after the TURN-ON time is set.

2. SELECT PROGRAM TO BE TURNED ON. Tune in the station that will carry the desired program at the selected time, and adjust the volume to the proper level.

3. SET AUTO-OFF-ON SWITCH KNOB. Turn this knob to the left until the indicator points to "AUTO". This will turn off the radio and set the switch so that it automatically comes on again at the selected time.

To turn the radio on before the "TONE-ALARM" time, turn the AUTO-OFF-ON knob to the "ON" position. It will then be necessary to repeat the steps listed above to again use the alarm feature.

©John F. Rider

Compliments of www.nucow.com

Radio Clock

USE OF "CONVENTIONAL ALARM"

The clock may be set to turn on the conventional buzzer alarm without turning on the radio. To accomplish this set the TURN-ON time as explained under "USE of TONE-ALARM" and leave the knob out from the cabinet. Set "AUTO-OFF-ON" switch knob to the "OFF" position. At the selected time, the buzzer will sound and will continue to sound until you turn it off by pushing knob all the way in.

USE OF TURN-ON FEATURE WITH EXTERNAL APPLIANCES

An electrical outlet is provided at the rear of the receiver to use the TURN-ON feature on any electrical appliance which operates on a 110-120 volt, 60 cycle power supply.

To use this outlet, simply plug in the appliance and set the controls on the clock the same as explained in the paragraph "USE OF TONE-ALARM" This will automatically start the appliance AND the radio at the selected time.

CAUTION: THE RATING OF THE EXTERNAL ELECTRICAL APPLIANCE MUST NOT EXCEED 660 WATTS.

Current is available at this outlet whenever the radio is turned on.

ALIGNMENT

Step No.	Position of Gang	Signal Generator Frequency	Generator Connection	Dummy Antenna	Adjustment	Type of Adjustment
1.	Open	455 KC.	Rear Gang Terminal	.1 Mfd.	I.F. Slugs	Adjust for Maximum Output
2.	Open	1620 KC.	Dummy Antenna	2 Turns of Hookup Wire 6" in Dia. (Place Approx. a Foot from & parallel to loop.)	Front Gang Trimmer	Adjust for Maximum Output
3.	1400 KC	1400 KC.			Rear Gang Trimmer	Adjust for Maximum Output
4.	600 KC	600 KC.				Check Gang Alignment

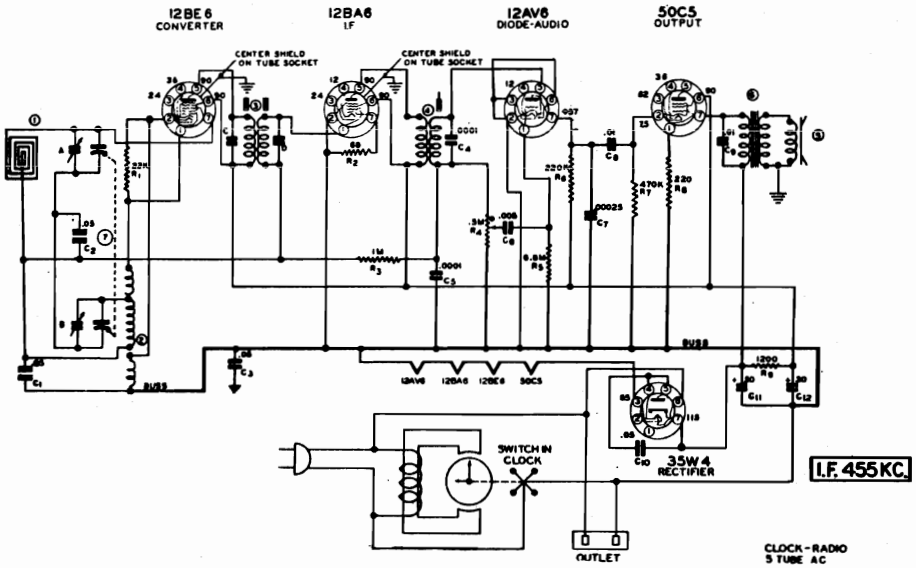

PARTS LIST

SCHEMATIC LOCATION	PART NUMBER	DESCRIPTION
C1,C2,C3	N-1345	Capacitor-Paper .05 MFD. 200 V
C4	N-7549	Capacitor-Ceramic 100 MMFD 500 V. 10%
C5	N-6015	Capacitor-Ceramic 100 MMFD 500 V. 20%
C6	N-4894	Capacitor-Paper .005 MFD. 600 V.
C7	N-6488	Capacitor-Ceramic 250 MMFD. 500 V. 20%
C8,C9	N-1344	Capacitor-Paper .01 MFD. 400 V.
C10	N-1346	Capacitor-Paper .05 MFD. 400 V.
C11)	N-7889	Capacitor-Electrolytic 50 MFD. 150 V.
C12)		Capacitor-Electrolytic 30 MFD. 150 V
R1	N-4025	Resistor - 22,000 Ohm - 1/2W. - 20%
R2	N-6485	Resistor - 68 Ohm - 1/2W. - 10%
R3	N-1262	Resistor - 1.0 Megohm - 1/2 W. - 20%
R4	N-7957	Control - On-Off & Volume
R5	N-4028	Resistor - 6.8 Megohm - 1/2 W. - 20%
R6	N-4026	Resistor - 220,000 Ohm - 1/2W. - 20%
R7	N-4027	Resistor - 470,000 Ohm - 1/2W. - 20%
R8	N-4024	Resistor - 220 Ohm - 1/2W. - 10%
R9	N-4900	Resistor - 1,200 Ohm - 1.0W. - 10%
	N-7824	Speaker - 4" P.M. with Output Transformer
	N-7956	Coil - Loop Antenna
	N-7888	Coil - 1st, I.F.
	N-7542	Coil - 2nd, I.F.
	N-7139	Coil - Oscillator

©John F. Rider

Compliments of www.nucow.com

MODELS 05FJB-6775B, 61-6775

INSTALLATION

Due to the compact size of this receiver, many mounting positions are possible. However, the most convenient is directly below the instrument panel as illustrated in figure 1. The following step by step procedure will facilitate the installation of the receiver.

1. With the receiver itself as a model, select the desired position.

2. Using the mounting bracket as a template locate the two front mounting holes and drill a ¼″ hole at each point.

3. Locate the position for the rear mounting stud in the bulkhead and drill a ½″ hole.

4. With the stud mounted on the receiver and the inside nut and washer in place, insert the stud through the bulkhead hole and attach the front end of the receiver to the instrument panel with the two 8-32 machine screws contained in kit of mounting hardware.

5. Open the engine compartment and remove the paint on the bulkhead around the stud. Assemble the washer and nut on this side and adjust both this nut and the inside nut for perfect alignment of the receiver and for good contact with the brightened surface of the bulkhead.

Caution: Do not screw stud in case beyond point necessary to insure support, otherwise, it may penetrate rear wall of case and cause damage to the instrument.

6. Attach the terminal of the "A" battery cable to one of the posts on the ammeter, preferably on the battery side. This may be ascertained by switching the receiver on. If no deflection of the ammeter occurs, the receiver is properly connected.

7. Insert plug on the end of the antenna lead into socket connector located on the left side of the radio.

ACCESSORIES FURNISHED FOR INSTALLATION

MOUNTING PARTS KIT

1 mounting stud	2 8-32 machine screws
2 ⅜-16 hex nuts	2 8-32 hex nuts
2 ⅜″ I.D. washers	2 No. 8 washers

2 No. 8 lock washers

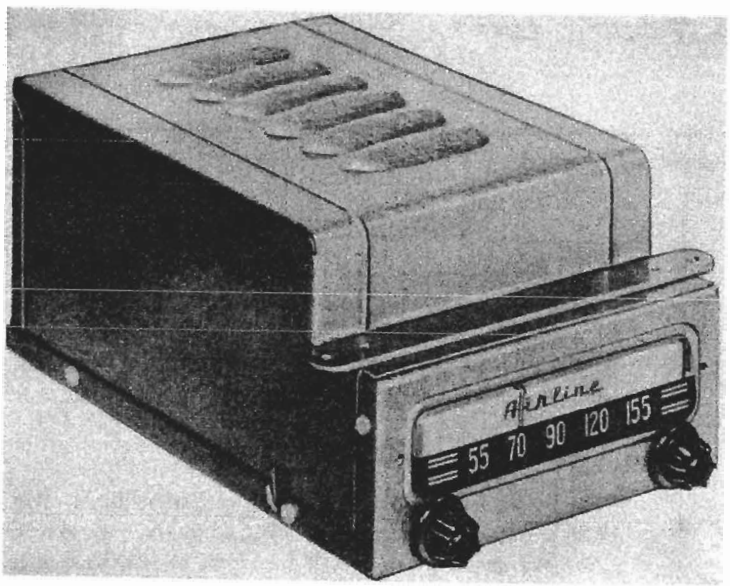

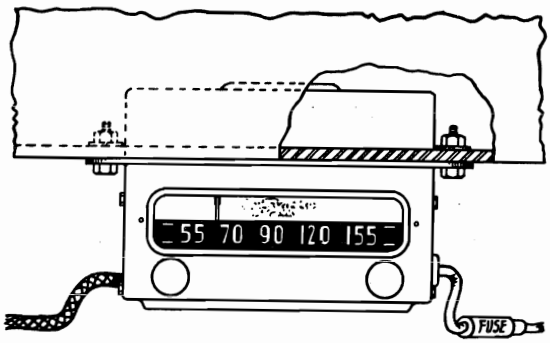

FIG. 1 RECEIVER MOUNTING DIAGRAM

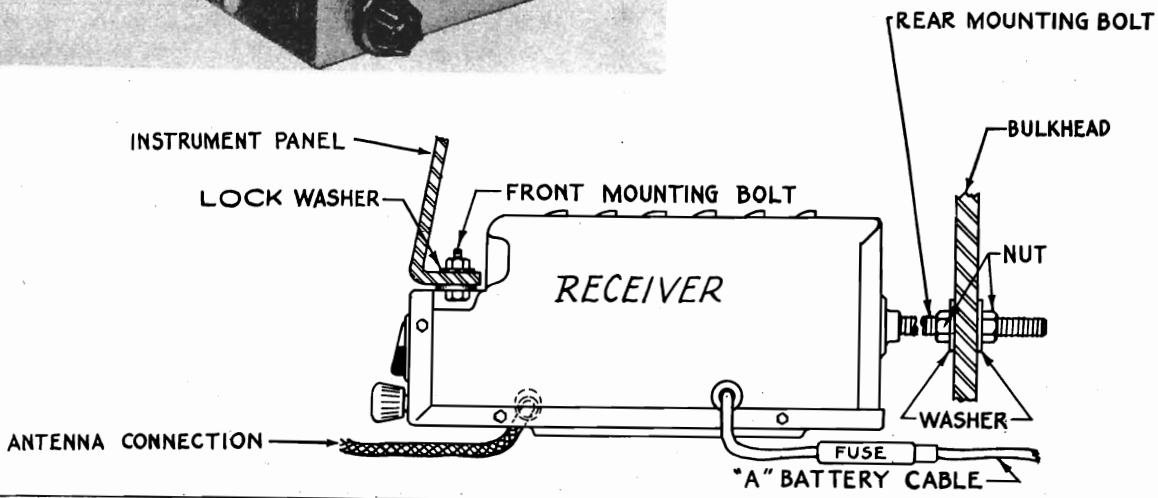

©John F. Rider

Compliments of www.nucow.com

MODELS 05FJB-6775B,
61-6775

MOTOR NOISE ELIMINATION

SUPPRESSION KIT

A suppression kit is shipped with this receiver. It contains the following parts:

1 Generator Condenser. 1 Distributor Suppressor.

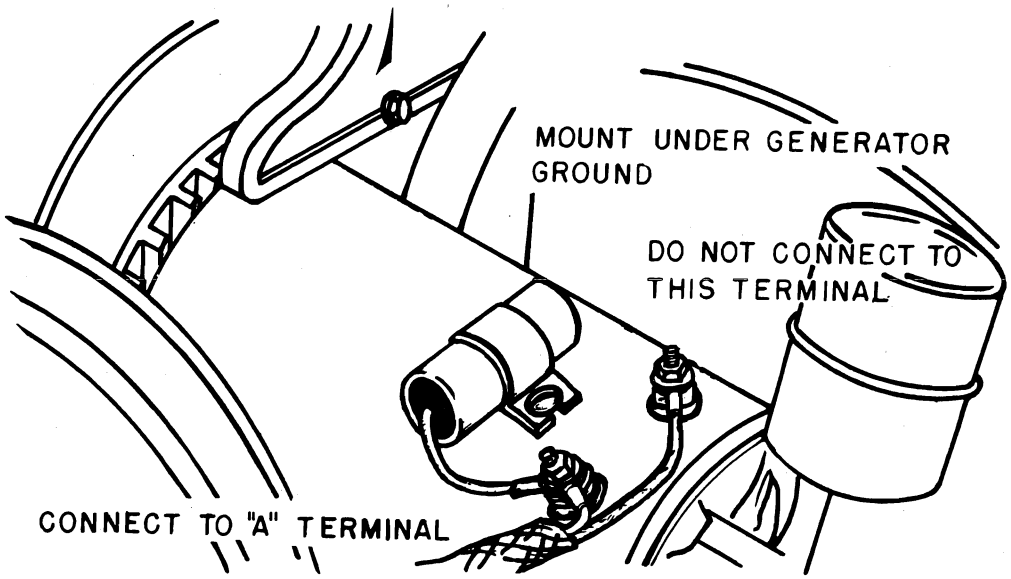

FIG. 2 GENERATOR CONDENSER

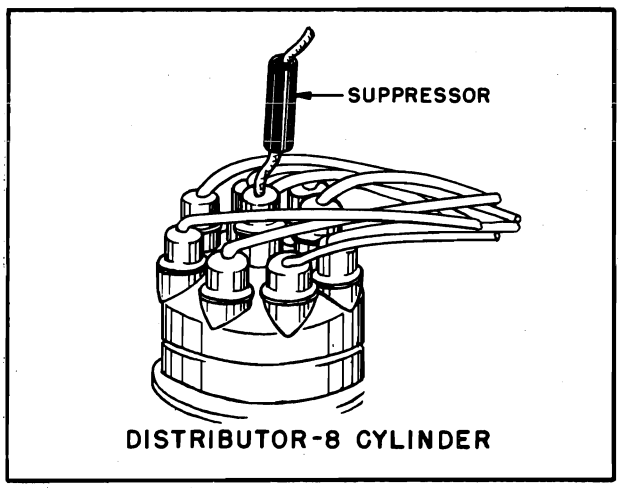

FIG. 3 DISTRIBUTOR SUPPRESSOR

GENERATOR CONDENSER

The generator condenser (Installed as shown in Figure 2) and distributor suppressor will normally eliminate all objectionable motor noise. If the motor noise persists, a .5 MFD by-pass condenser may be connected to either side of the ammeter with the ground lug fastened to a good ground nearby.

DISTRIBUTOR SUPPRESSOR

Disconnect the center lead in the distributor head of the motor (see Fig. 3). Cut lead approximately 2 inches back from metal tip end. Screw suppressor into cut end of long lead. Screw cut end of short lead into suppressor. Plug lead, with attached suppressor, back into distributor head.

WHEEL STATIC

Wheel static is a form of interference caused by the rotation of the front wheels of the car, and it is, of course, only noticed when the car is in motion. If this form of interference is present, it can be eliminated by installing wheel static collector springs between the inner hub cap and the spindle shaft.

ELECTRICAL ACCESSORIES

In some cases, it may be found that car accessories such as electric heaters, lighters, automatic relays or gauges, may cause interference while in operation. Proper procedure in such cases is to connect a .5 MFD by-pass condenser from ground to the suspected accessory until the source of interference is found. The condenser then should be permanently mounted in this location.

©John F. Rider

Compliments of www.nucow.com

MODELS 05FJB-6775B, 61-6775

SERVICE DATA

ELECTRICAL SPECIFICATIONS

Power Supply .....6.3 Volts DC.
Current .....5.5 Amp. Average
Frequency Range .....538-1600 KC.
Speaker .....5" PM 3.2 Ohm V. C.
Power Output .....1.5 watts, undistorted
2 watts, maximum

This receiver contains the following:

1 — 6BE6 — Converter
1 — 6BA6 — I. F. Amplifier
1 — 6AT6 — Detector — AVC — 1st Audio
1 — 6AS5 — Power Output
1 — 6X4 — Rectifier

SERVICE NOTES

Voltage taken from the different points of the circuit to the chassis are measured with volume control in maximum position, all tubes in their sockets, no signal applied, and with a volt meter having a resistance of 20,000 Ohms per volt. These voltages are clearly shown on the voltage chart.

All voltages should be measured with an input voltage of 6.3 volts DC.

To check for open by-pass condensers, shunt each condenser with another one having the same capacity and voltage rating which is known to be good until the defective unit is located.

ALIGNING INSTRUCTION

Never attempt any adjustments on this receiver unless it becomes necessary to replace a coil or transformer, or the adjustments have been tampered with in the field. Always make certain that other circuit components, such as tubes, condensers, resistors, etc., are normal before proceeding with realignment.

If realignment is necessary follow the instructions given under the heading "Alignment Procedure." After realignment has been completed repeat the procedure as final check.

ALIGNMENT PROCEDURE

Volume control — Maximum, all adjustments.
No signal applied to antenna.
Power input — 6.3 volts.
Connect dummy antenna in series with output lead of signal generator.
Connect ground lead of signal generator to chassis.
Repeat alignment procedure as a final check.

The following equipment is necessary for proper alignment:
Signal generator that will provide the test frequencies as listed, modulated 400 cycles, 30%.
Non-metallic screwdriver.
Output meter. (1.8 volt for 1 watt output.)
Dummy antennas — .1 MFD., 100 MMFD.
For alignment points refer to Schematic Diagram.

DIAL SETTING	GENERATOR FREQUENCY	DUMMY ANT.	GENERATOR CONNECTION	TRIMMER REFERENCE	TRIMMER ADJUSTMENT	TRIMMER FUNCTION
1) Fully open	455 KC	.1 MFD	6BE6 Grid	T2 Top & bottom	Maximum	Output I.F.
2) Fully open	455 KC	.1 MFD	6BE6 Grid	T1 Top & bottom	Maximum	Input I.F.
3) Fully open	1600 KC	100 MMFD	Ant. lead	CV2	Maximum	Oscillator
4) Tune in signal from generator	1400 KC	100 MMFD	Ant. lead	CV1	Maximum	Antenna
5) Tune in signal from generator	600 KC	100 MMFD	Ant. lead	L2	Maximum	Antenna
6) Repeat steps 4 and 5						

©John F. Rider

Compliments of www.nucow.com

MODEL 05FJB-6775B

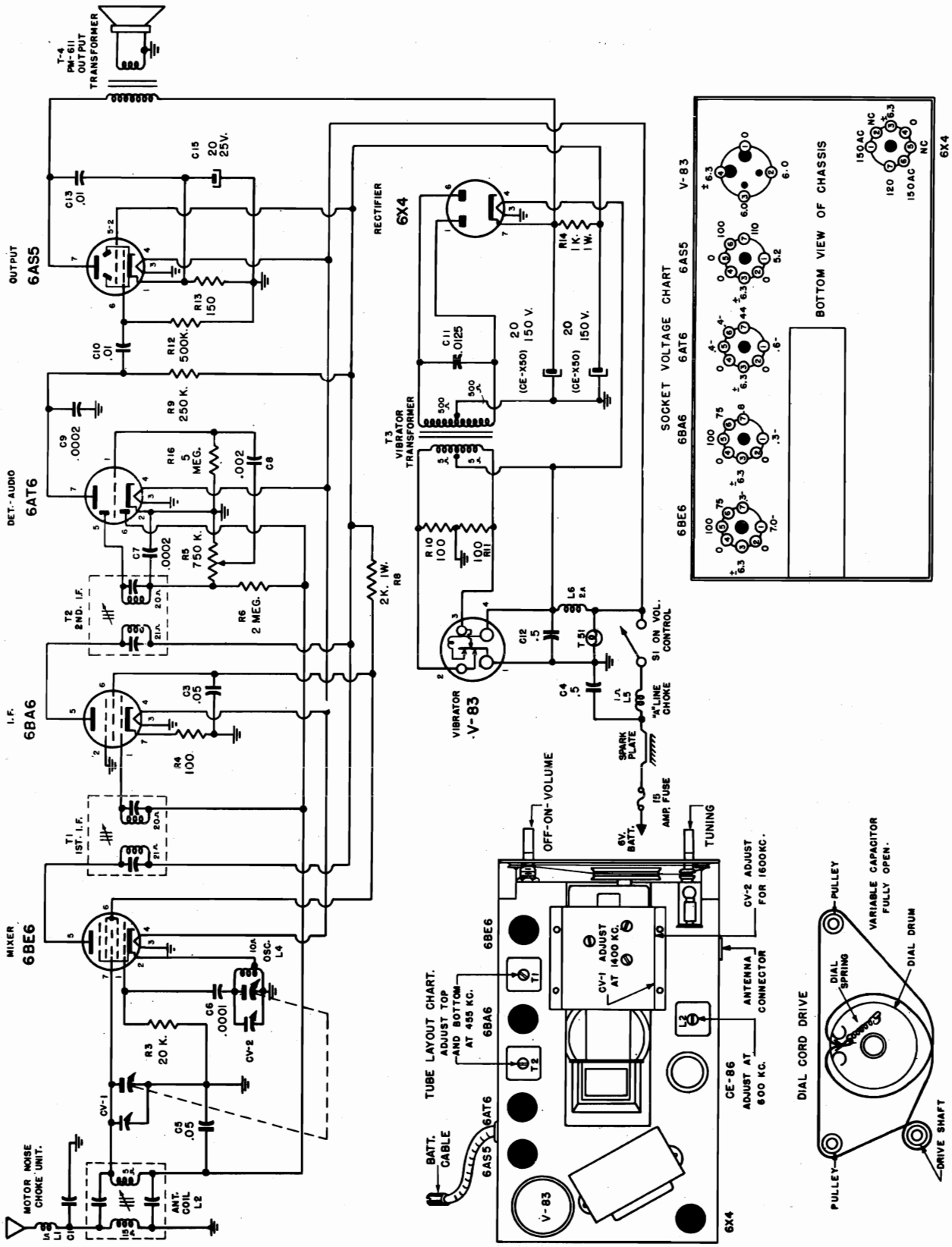

©John F. Rider

Compliments of www.nucow.com

MODELS 05FJB-6775B, 61-6775

REPLACEMENT PARTS LIST

SCHEMATIC DIAGRAM REF. NO.	PART NO.	DESCRIPTION
		CONDENSERS
C3, C5	C207	.05 MFD 200 volt condenser
C4, C12	C209	.5 MFD 100 volt condenser
C6	CC200	100 MMFD ceramic condenser
C7, C9	CC201	200 MMFD ceramic condenser
C8	C203	.002 MFD 400 volt condenser
C10, C13	C206	.01 MFD 600 volt condenser
C11	C220	.0125 MFD 1200 volt condenser
C15	CE-X50	20 MFD 150 volt electrolytic condenser; 20 MFD 150 volt electrolytic condenser; 20 MFD 25 volt electrolytic condenser
		RESISTORS
R3	R306	20K ohm ½ watt 20% resistor
R4, R10, R11	R301	100 ohm ½ watt 20% resistor
R5	RV-X50	Volume control ¾ megohm with switch
R6	R310	2 megohm ½ watt 20% resistor
R8	R326	2K ohm 1 watt 20% resistor
R9	R307	250K ohm ½ watt 20% resistor
R12	R308	500K ohm ½ watt 20% resistor
R13	R327	150 ohm ½ watt 20% resistor
R14	R312	1K ohm 1 watt 20% resistor
		COILS AND TRANSFORMERS
L1-C1	L200	Motor noise elimination Unit
L2	57FB-3	Antenna Coil
L4	L201	R.F. Oscillator coil
L5	L203	Choke "A" line
L6	L202	Choke, vibrator hash

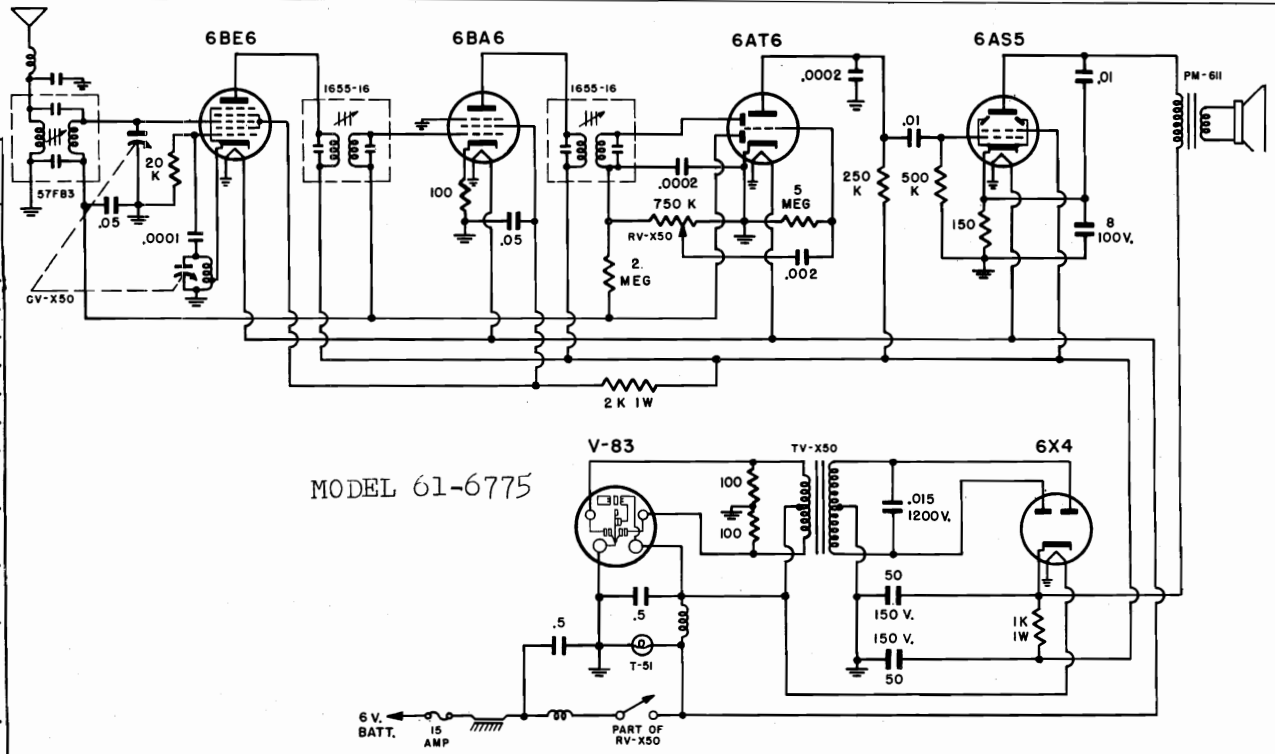

MODEL 61-6775

T1	1655-16	1st IF transformer
T2	1655-16	2nd IF transformer
T3	TV-X50	Vibrator transformer
T4		Output transformer (Part of speaker, not furnished separately)

DIAL PARTS

H201	Grommet, rubber drive
T51	Pilot light
H202	Pilot light socket
H203	Pulley, idler
H204	Spring, Dial drive string tension
H531	String, Dial drive
DP 530	Dial Pan
PS 800	Dial Pointer

DS 540	Drive shaft assembly
S556	Dial scale window
H508	Knob
F555	Felt washers (for knobs)

MISCELLANEOUS

A300	"A" lead assembly
A201	Fuse 15 Amp.
V83	Vibrator
H207	Clip, case anti-rattle
H208	Clip, coil mounting
PM611	Speaker 5" (includes output transformer)
H212	Receptacle, Antenna cable
GC607	Speaker Grill cloth
H601	Case bottom
H602	Case cover

©John F. Rider

Compliments of www.nucow.com

MODELS 05FJB-6776B,
61-6776

INSTALLATION

Due to the compact size of this receiver, many mounting positions are possible. However, the most convenient is directly below the instrument panel as illustrated in figure 1. The following step by step procedure will facilitate the installation of the receiver.

1. With the receiver itself as a model, select the desired position.

2. Using the front mounting bracket as a template locate the two front mounting holes and a ¼" hole at each point.

3. Attach front mounting bracket to the receiver by two No. 6 self-tapping screws.

4. Locate the position for the rear mounting stud in the bulkhead and drill a ½" hole.

5. With the stud mounted on the receiver and the inside nut and washer in place, insert the stud through the bulkhead hole and attach the front end of the receiver to the instrument panel with two 8-32 machine screws contained in kit of mounting hardware.

6. Open the engine compartment and remove the paint on the bulkhead around the stud. Assemble the washer and nut on this side and adjust both this nut and the inside nut for perfect alignment of the receiver and for good contact with the brightened surface of the bulkhead.
Caution: Do not screw stud in case beyond point necessary to insure support, otherwise, it may penetrate rear wall of case and cause damage to the instrument.

7. Attach the terminal of the "A" battery cable to one of the posts on the ammeter, preferably on the battery side. This may be ascertained by switching the receiver on. If no deflection of the ammeter occurs, the receiver is properly connected.

8. Insert plug on the end of the antenna lead into socket connector located on the left side of the radio.

ACCESSORIES FURNISHED FOR INSTALLATION

MOUNTING PARTS KIT

1 mounting stud
2 ⅜-16 hex nuts
2 ⅜" I.D. washers
2 8-32 machine screws
2 8-32 hex nuts
2 No. 8 washers
2 No. 8 lock washers

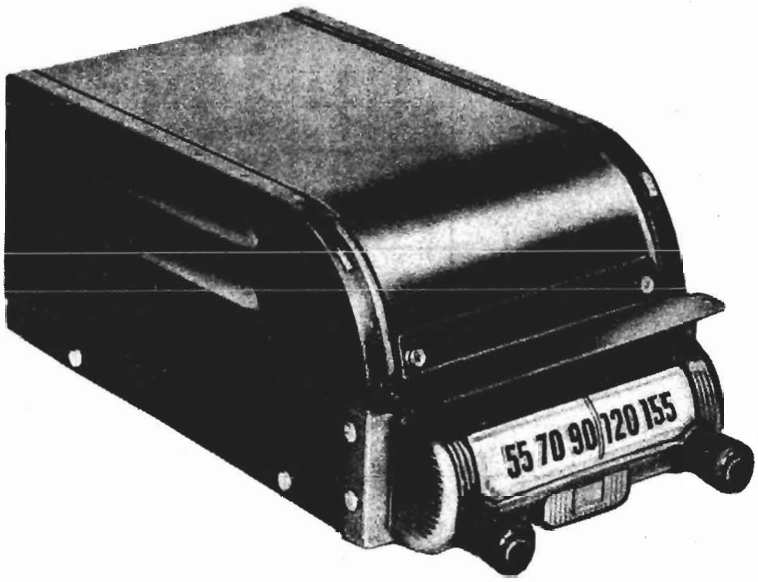

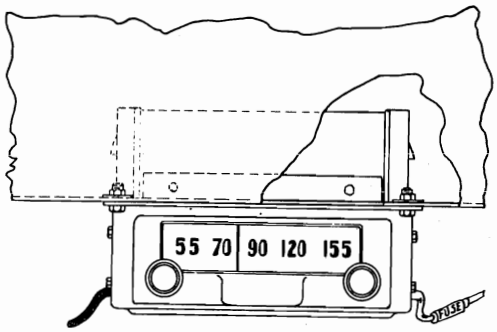

FIG. 1 DETAIL MOUNTING ASSEMBLY

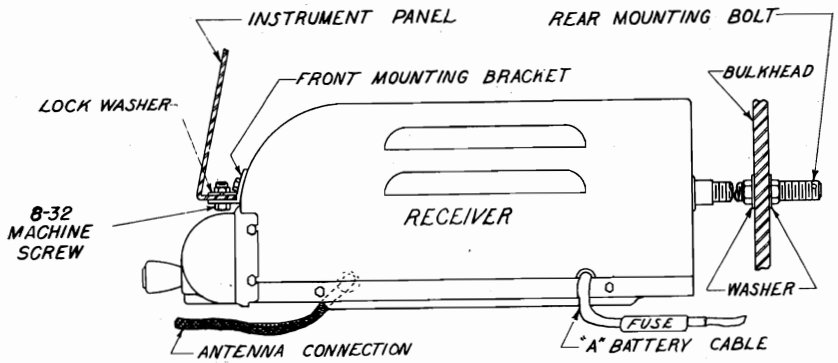

© John F. Rider

Compliments of www.nucow.com

MODELS 05FJB-6776B, 61-6776

MOTOR NOISE ELIMINATION

SUPPRESSION KIT

1 .5 MFD Generator Condenser 1 Distributor Suppressor

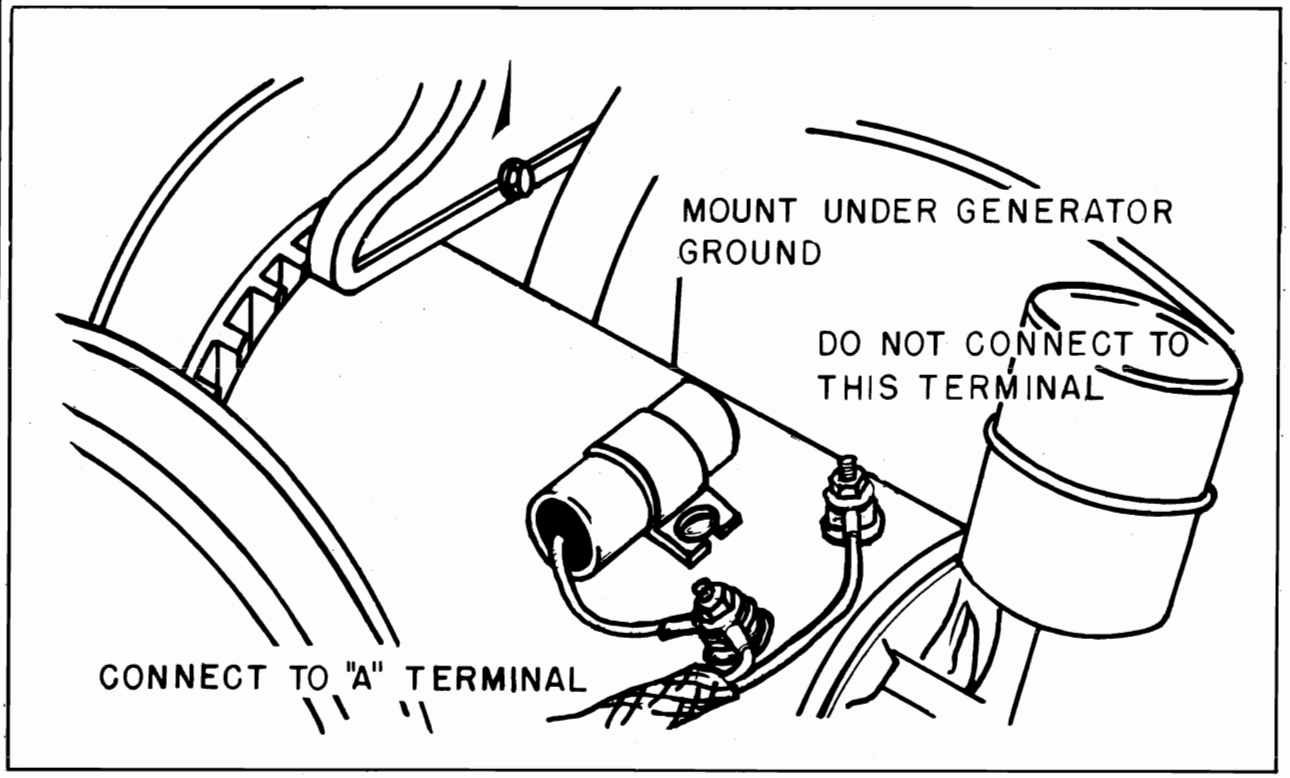

FIG. 2 GENERATOR CONDENSER

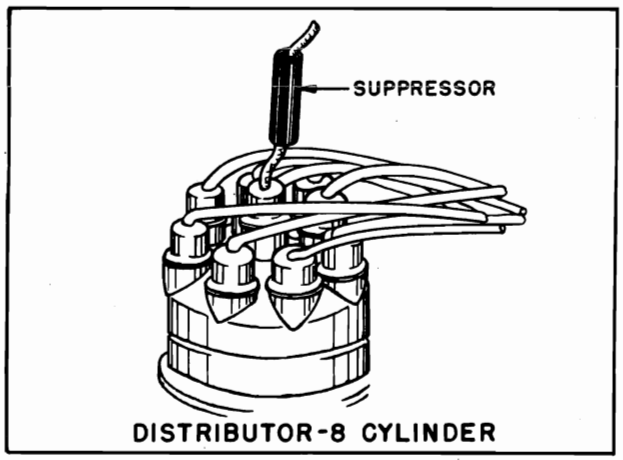

FIG. 3 DISTRIBUTOR SUPPRESSOR

GENERATOR CONDENSER

The generator condenser (Installed as shown in Figure 2) and distributor suppressor will normally eliminate all objectionable motor noise. If the motor noise persists, a .5 MFD by-pass condenser may be connected to either side of the ammeter with the ground lug fastened to a good ground nearby.

DISTRIBUTOR SUPPRESSOR

Disconnect the center lead in the distributor head of the motor (see Fig. 3). Cut lead approximately 2 inches back from metal tip end. Screw suppressor into cut end of long lead. Screw cut end of short lead into suppressor. Plug lead, with attached suppressor, back into distributor head.

WHEEL STATIC

Wheel static is a form of interference caused by the rotation of the front wheels of the car, and it is, of course, only noticed when the car is in motion. If this form of interference is present, it can be eliminated by installing wheel static collector springs between the inner hub cap and the spindle shaft.

ELECTRICAL ACCESSORIES

In some cases, it may be found that car accessories such as electric heaters, lighters, automatic relays or gauges, may cause interference while in operation. Proper procedure in such cases is to connect a .5 MFD by-pass condenser from ground to the suspected accessory until the source of interference is found. The condenser then should be permanently mounted in this location.

©John F. Rider

Compliments of www.nucow.com

MODELS 05FJB-6776B,
61-6776

SERVICE DATA

ELECTRICAL SPECIFICATIONS

Power Supply ..... 6.3 Volts DC
Current ..... 5.5 Amp. average
Frequency Range ..... 538-1600 KC
Speaker ..... 5" PM 3.2. Ohm. V.C.
Power Output ..... 2 watts, undistorted
3 watts, maximum
Sensitivity ..... 2-3 microvolts average for 1 watt output
Selectivity .. 40 KC broad at 1000 times signal, at 1000 KC

This receiver contains the following:

1 — 6BA6 — RF Amplifier
1 — 6BE6 — Converter
1 — 6BA6 — I. F. Amplifier
1 — 6AT6 — Detector — AVC — 1st Audio
1 — 6AQ5 — Power Output
1 — 6X4 — Rectifier

SERVICE NOTES

Voltage taken from the different points of the circuit to the chassis are measured with volume control in maximum position, all tubes in their sockets, no signal applied, and with a volt meter having a resistance of 20,000 Ohms per volt. These voltages are clearly shown on the voltage chart.

All voltages should be measured with an input voltage of 6.3 volts DC.

To check for open by-pass condensers, shunt each condenser with another one having the same capacity and voltage rating which is known to be good until the defective unit is located.

ALIGNING INSTRUCTION

Never attempt any adjustments on this receiver unless it becomes necessary to replace a coil or transformer, or the adjustments have been tampered with in the field. Always make certain that other circuit components, such as tubes, condensers, resistors, etc., are normal before proceeding with realignment.

If realignment is necessary follow the instructions given under the heading "Alignment Procedure." After realignment has been completed repeat the procedure as final check.

ALIGNMENT PROCEDURE

Volume control — Maximum, all adjustments.
No signal applied to antenna.
Power input — 6.3 volts.
Connect dummy antenna in series with output lead of signal generator.
Connect ground lead of signal generator to chassis.
Repeat alignment procedure as a final check.

The following equipment is necessary for proper alignment:

Signal generator that will provide the test frequencies as listed, modulated 400 cycles, 30%.
Non-metallic screwdriver.
Output meter. (1.8 volt for 1 watt output.)
Dummy antennas — .1 MFD., 100 MMFD.

For alignment points refer to Schematic Diagram.

DIAL SETTING	GENERATOR FREQUENCY	DUMMY ANT.	GENERATOR CONNECTION	TRIMMER REFERENCE	TRIMMER ADJUSTMENT	TRIMMER FUNCTION
1) Fully open	455 KC	.1 MFD	6BE6 Grid	T2 Top & bottom	Maximum	Output I.F.
2) Fully open	455 KC	.1 MFD	6BE6 Grid	T1 Top & bottom	Maximum	Input I.F.
3) Fully open	1600 KC	100 MMFD	Ant. lead	CV2	Maximum	Oscillator
4) Tune in signal from generator	1400 KC	100 MMFD	Ant. lead	CV3	Maximum	RF Stage
5) Tune in signal from generator	1400 KC	100 MMFD	Ant. lead	CV1	Maximum	Antenna
6) Tune in signal from generator	600 KC	100 MMFD	Ant. lead	L3	Maximum	RF Stage
7) Tune in signal from generator	600 KC	100 MMFD	Ant. lead	L2	Maximum	Antenna
8) Repeat steps 4 and 5						

©John F. Rider

Compliments of www.nucow.com

MODEL 05FJB-6776B

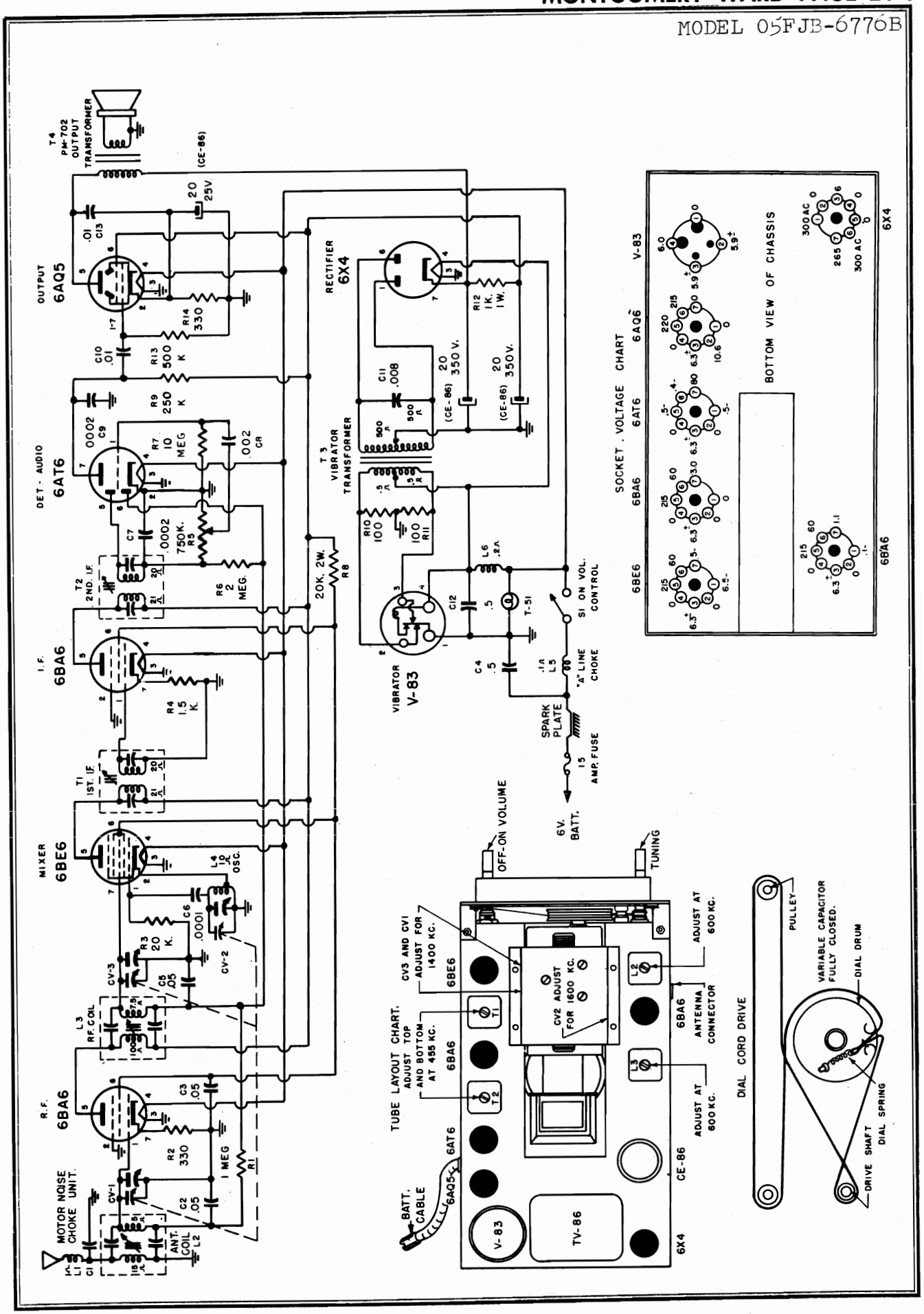

©John F. Rider

Compliments of www.nucow.com

MODELS 05FJB-6776B, 61-6776

REPLACEMENT PARTS LIST

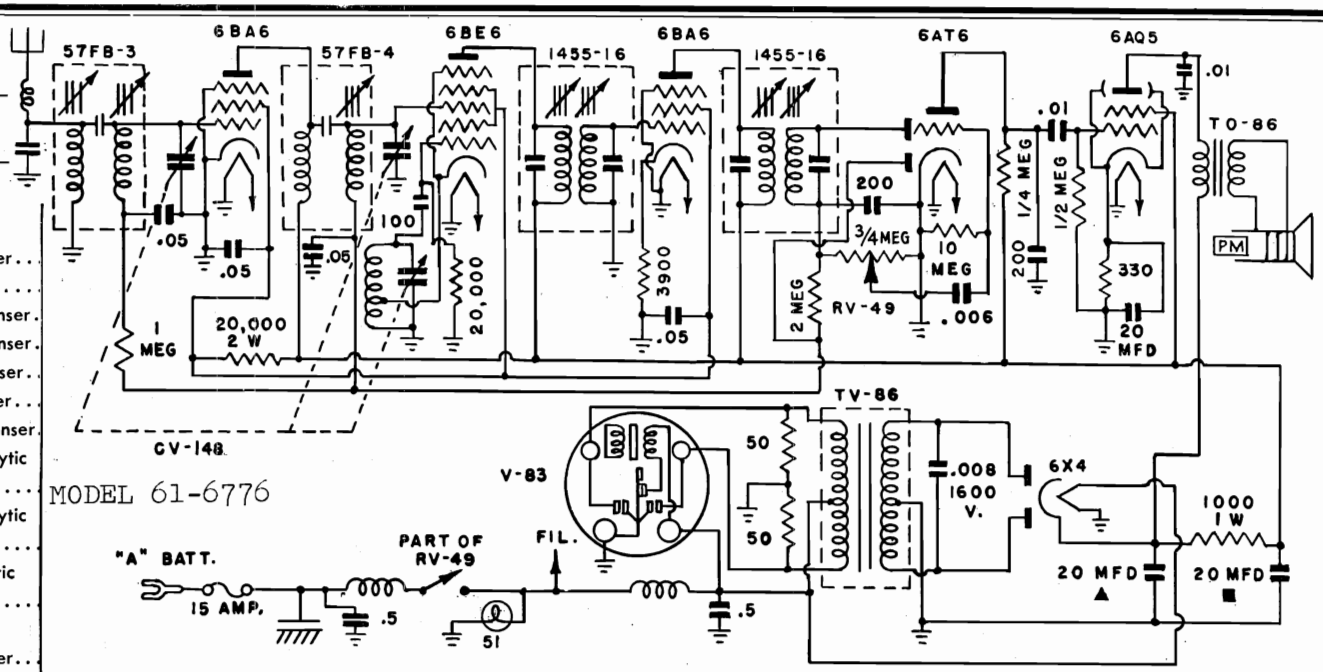

MODEL 61-6776

SCHEMATIC DIAGRAM REFERENCE	PART NO.	DESCRIPTION
		CONDENSERS
C2, C3, C5	C207	.05 MFD 200 volt condenser
C4, C12	C209	.5 MFD 100 volt condenser
C6	CC200	100 MMFD ceramic condenser
C7, C9	CC201	200 MMFD ceramic condenser
C8	C203	.002 MFD 400 volt condenser
C10, C13	C206	.01 MFD 600 volt condenser
C11	C205	.008 MFD 1600 volt condenser
CE-86	CE-86	20 MFD 350 volt electrolytic condenser; 20 MFD 350 volt electrolytic condenser; 20 MFD 25 volt electrolytic condenser
CV1, CV2, CV3	CV-148	3 section variable condenser
		RESISTORS
R1	R-309	1 megohm ½ watt 20% resistor
R2, R14	R-303	330 ohm ½ watt 20% resistor
R3	R-306	20K ohm ½ watt 20% resistor
R4	R-314	1.5K ohm ½ watt 20% resistor
R5	RV-57	Volume control ¾ megohm with switch
R6	R-310	2 megohm ½ watt 20% resistor
R7	R-311	10 megohm ½ watt 20% resistor
R8	R-313	20K ohm 2 watt 20% resistor
R9	R-307	250K ohm ½ watt 20% resistor
R10, R11	R-301	100 ohm ½ watt 20% resistor
R12	R-312	1k ohm 1 watt 20% resistor
		COILS AND TRANSFORMERS
L1-C1	L-200	Motor Noise elimination unit
L2	57FB-3	Antenna Coil
L3	57FB-4	R.F. Coil
L4	L-201	R.F. Oscillator Coil
L5	L-203	Choke "A" Line
L6	L-202	Choke, vibrator hash
T1	1655-16	1st I.F. Transformer
T2	1655-16	2nd I.F. Transformer
T3	TV86 or TV86A	Vibrator Transformer
T4		Output transformer (Part of speaker not furnished separately)

PART NO.	DESCRIPTION
	DIAL PARTS
H201	Grommet, rubber drive
T51	Pilot light
H202	Pilot light socket
H203	Pulley, idler
H204	Spring, Dial drive string tension
H503	String, Dial drive
DP505	Dial Pan

ELECTROLYTIC CONDENSER CE-86
■ 20 MFD 350 VDC
▲ 20 MFD 350 VDC
20 MFD 25 VDC

I.F. 455 KC
RANGE 538 TO 1600 KC

ISSUE 1247

PS 1024	Dial Pointer
DS -500	Drive shaft assembly
	Plastic Dial Scale front
H508	Knob
	MISCELLANEOUS
A300	"A" lead assembly
A201	Fuse 15 Amp.
V-83	Vibrator
H-207	Clip, case anti-rattle
H-208	Clip, coil mounting
H-501	Case bottom
H-502	Case cover
PM-702-A	Speaker 5" (includes output transformer)
H-212	Receptacle, Antenna Cable
GC-507	Speaker Grill Cloth and cardboard baffle

© John F. Rider

Compliments of www.nucow.com

MODELS 05FJB-6777B,
61-6777, Ford, 1949-1950

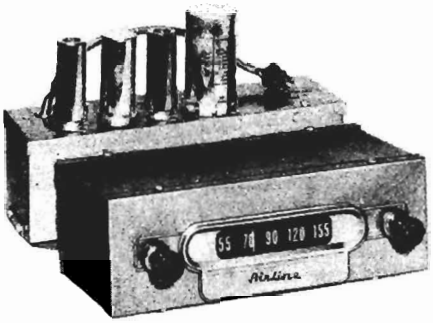

INSTALLATION

1. Remove two speed nuts securing radio opening cover plate to instrument panel.

2. Remove cover plate.

3. Place speaker and power pack unit over four threaded stud bolts located on the underside of the instrument panel. (Position power pack unit so that power cable is located on the left hand side.) See Fig. 1.

4. Secure power pack into position with four 8-32 nuts and washers supplied in kit of mounting hardware.

5. Remove knobs, cup washers and hex mounting nuts from tuning units. *Do not remove* escutcheon.

6. Place tuning unit behind instrument panel so that mounting bushings and shafts protrude through the front panel.

7. Attach tuning unit with a hex nut on each mounting bushing.

8. Replace cup washers, grommets and knobs over shafts.

9. Secure a supporting bracket (2 supplied in kit of hardware) to each side of the power pack unit by means of two No. 8 self-tapping screws. Use end of supporting bracket with round hole. If more convenient, these brackets may be attached before power pack unit is positioned in place.

10. Swing supporting brackets so that slotted holes are in line with the holes on each side of the tuning unit.

11. Secure to tuning unit with two No. 8 self-tapping screws.

12. Insert power cable plug into socket on rear of tuning unit.

13. Plug antenna cable into tuning unit.

14. Secure power cable under cable clamp and tighten clamp screw.

15. Connect "A" lead to accessory terminal marked RAD. GA, on the ignition switch.

ACCESSORIES FURNISHED FOR INSTALLATION

MOUNTING PARTS KIT

The following mounting hardware parts are shipped attached to the receiver. (See detail assembly drawing Fig. 1).

- 2 7/16-28 hex nuts
- 2 Cup washers
- 2 Grommets
- 2 Knobs
- 1 Cable clamp

An envelope containing additional mounting hardware is supplied with this receiver. It contains the following parts:

- 2 Supporting brackets
- 4 No. 8 self-tapping screws
- 4 8-32 nuts
- 4 No. 8 washers

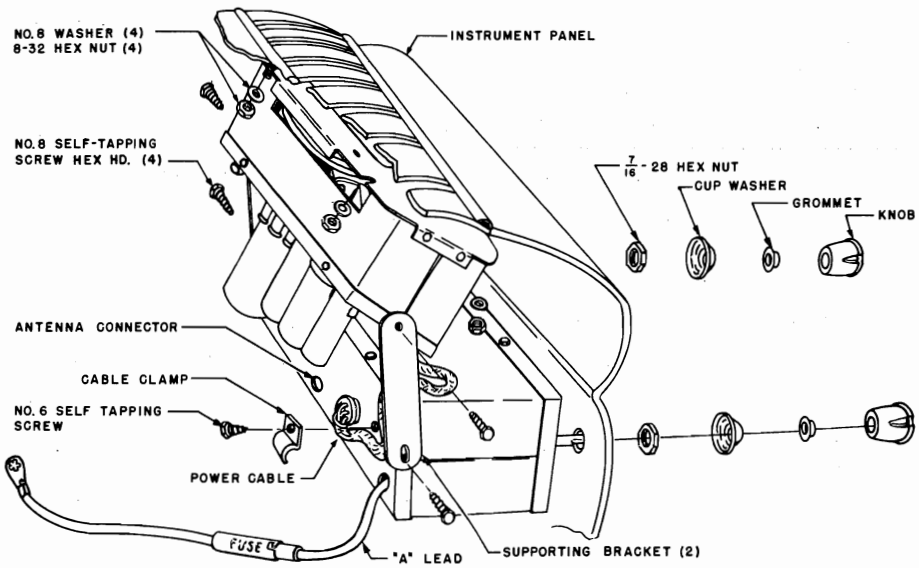

FIG. 1 DETAIL MOUNTING ASSEMBLY

©John F. Rider

Compliments of www.nucow.com

MODELS 05FJB-6777B,
61-6777, Ford, 1949-1950

MOTOR NOISE ELIMINATION

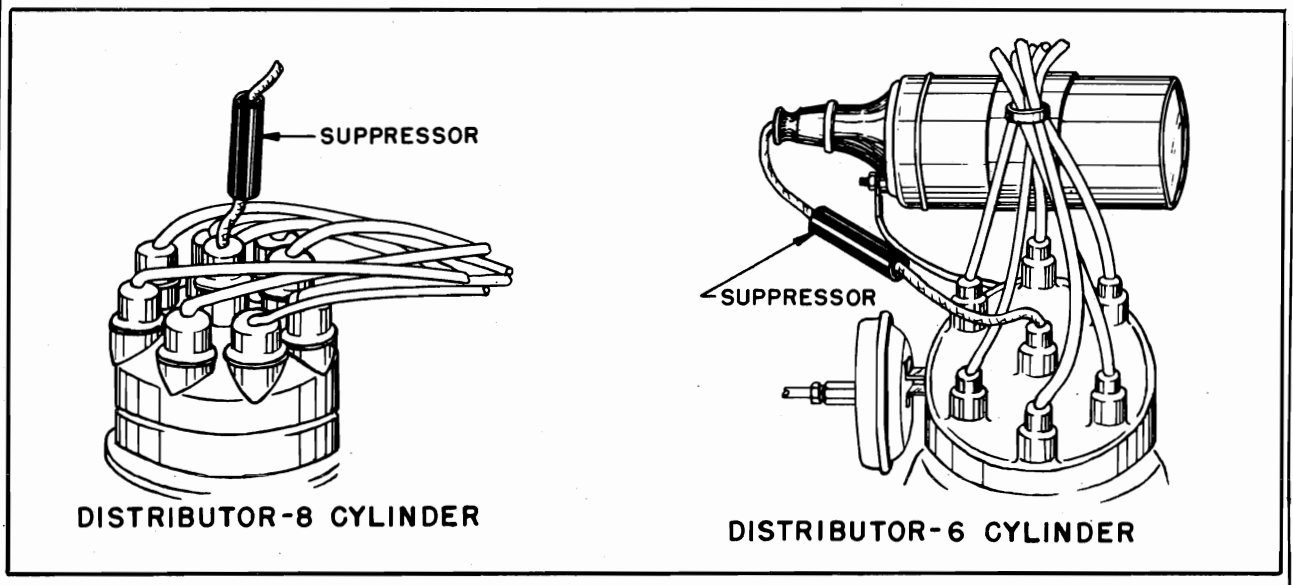

FIG. 2 DISTRIBUTOR SUPPRESSOR

SUPPRESSION KIT

A suppression kit is shipped with this receiver. It contains the following parts:

1 Generator Condenser

1 Distributor suppressor

DISTRIBUTOR SUPPRESSOR

Disconnect high tension wire that runs from the ignition coil to the center hole of the distributor head. Cut lead one and one-half inches back from metal tip end for 8 cylinder Ford or two and one-half inches back for 6 cylinder Ford. Screw suppressor into cut end of long lead. Screw cut end of short lead into suppressor. Plug lead with attached suppressor, back into distributor head.

GENERATOR CONDENSER

Loosen the top assembly bolt from the rear end plate of the generator. DO NOT REMOVE. Mount .5MFD generator condenser under this bolt. Tighten bolt and connect condenser lead to the armature terminal of the generator.

The generator condenser and distributor suppressor should eliminate all objectionable motor noise in most cases. If the motor noise persists the following steps should be taken. Check operation of radio as each step is made.

WHEEL STATIC

Wheel static is a form of interference caused by the rotation of the front wheels of the car, and it is, of course, only noticed when the car is in motion. If this form of interference is present, it can be eliminated by installing wheel static collector springs between the inner hub cap and the spindle shaft.

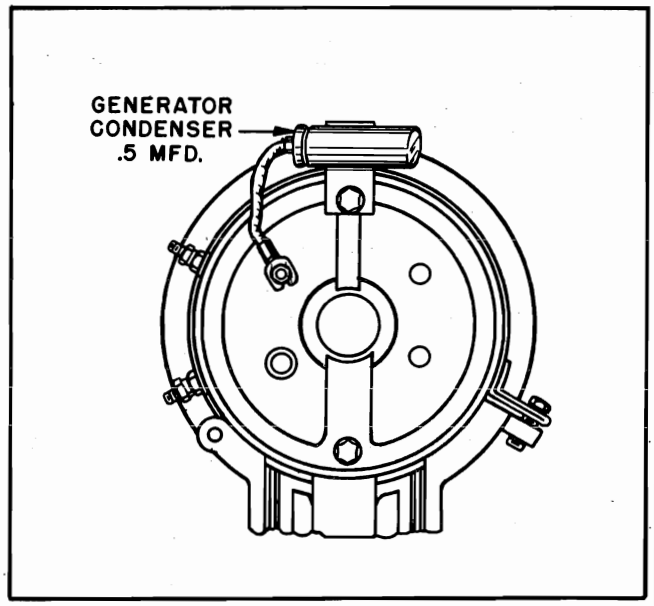

FIG. 3 GENERATOR CONDENSER

AMMETER CONDENSER

A .5 MFD by-pass condenser should be connected to either side of the ammeter with the ground lug fastened to a good ground nearby.

ELECTRICAL ACCESSORIES

In some cases, it may be found that car accessories such as electric heaters, lighters, automatic relays or gauges, may cause interference while in operation. Proper procedure in such cases is to connect a .5 MFD by-pass condenser from ground to the suspected accessory until the source of interference is found. The condenser then should be permanently mounted in this location.

©John F. Rider

Compliments of www.nucow.com

MODELS 05FJB-6777B,
61-6777, Ford, 1949-1950

SERVICE DATA

ELECTRICAL SPECIFICATIONS

Power Supply .....6.3 Volts DC
Current .....5.5 Amp. average
Frequency Range .....538-1600 KC
Speaker .....5¼" PM 3.2 Ohm V.C.
Power Output .....2 watts, undistorted
3 watts, maximum
Sensitivity ..... 2-3 microvolts average for 1 watt output
Selectivity .. 40 KC broad at 1000 times signal, at 1000 KC
This receiver contains the following:
1 — 6BA6 — RF Amplifier
1 — 6BE6 — Converter
1 — 6BA6— I. F. Amplifier
1 — 6AT6 — Detector — AVC — 1st Audio
1 — 6AQ5 — Power Output
1 — 6X4 — Rectifier

SERVICE NOTES

Voltage taken from the different points of the circuit to the chassis are measured with volume control in maximum position, all tubes in their sockets, no signal applied, and with a volt meter having a resistance of 20,000 Ohms per volt. These voltages are clearly shown on the voltage chart.

All voltages should be measured with an input voltage of 6.3 volts DC.

To check for open by-pass condensers, shunt each condenser with another one having the same capacity and voltage rating which is known to be good until the defective unit is located.

ALIGNING INSTRUCTION

Never attempt any adjustments on this receiver unless it becomes necessary to replace a coil or transformer, or the adjustments have been tampered with in the field. Always make certain that other circuit components, such as tubes, condensers, resistors, etc., are normal before proceeding with realignment.

If realignment is necessary follow the instructions given under the heading "Alignment Procedure." After realignment has been completed repeat the procedure as final check.

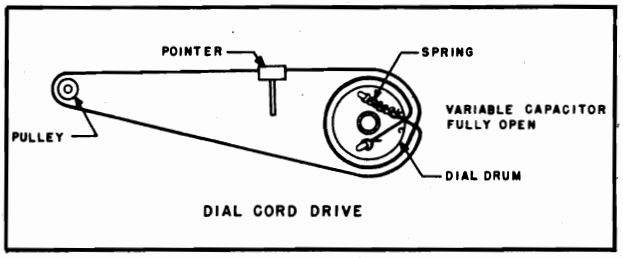

FIG. 4 DIAL CORD DRIVE

ALIGNMENT PROCEDURE

Volume control — Maximum all adjustments.
No signal applied to antenna.
Power input — 6.3 volts.
Connect dummy antenna in series with output lead of signal generator.
Connect ground lead of signal generator to chassis.
Repeat alignment procedure as a final check.

The following equipment is necessary for proper alignment:
Signal generator that will provide the test frequencies as listed, modulated 400 cycles, 30%.
Non-metallic screwdriver.
Output meter. (1.8 volt for 1 watt output.)
Dummy antennas — .1 MFD., 100 MMFD.
For alignment points refer to Schematic Diagram.

DIAL SETTING	GENERATOR FREQUENCY	DUMMY ANT.	GENERATOR CONNECTION	TRIMMER REFERENCE	TRIMMER ADJUSTMENT	TRIMMER FUNCTION
1) Fully open	455 KC	.1 MFD	6BE6 Grid	T2 Top & bottom	Maximum	Output I.F.
2) Fully open	455 KC	.1 MFD	6BE6 Grid	T1 Top & bottom	Maximum	Input I.F.
3) Fully open	1600 KC	100 MMFD	Ant. lead	CV2	Maximum	Oscillator
4) Tune in signal from generator	1400 KC	100 MMFD	Ant. lead	CV3	Maximum	RF Stage
5) Tune in signal from generator	1400 KC	100 MMFD	Ant. lead	CV1	Maximum	Antenna
6) Tune in signal from generator	600 KC	100 MMFD	Ant. lead	L3	Maximum	RF Stage
7) Tune in signal from generator	600 KC	100 MMFD	Ant. lead	L2	Maximum	Antenna
8) Repeat steps 4 and 5						

©John F. Rider

Compliments of www.nucow.com

MODEL 05FJB-6777B

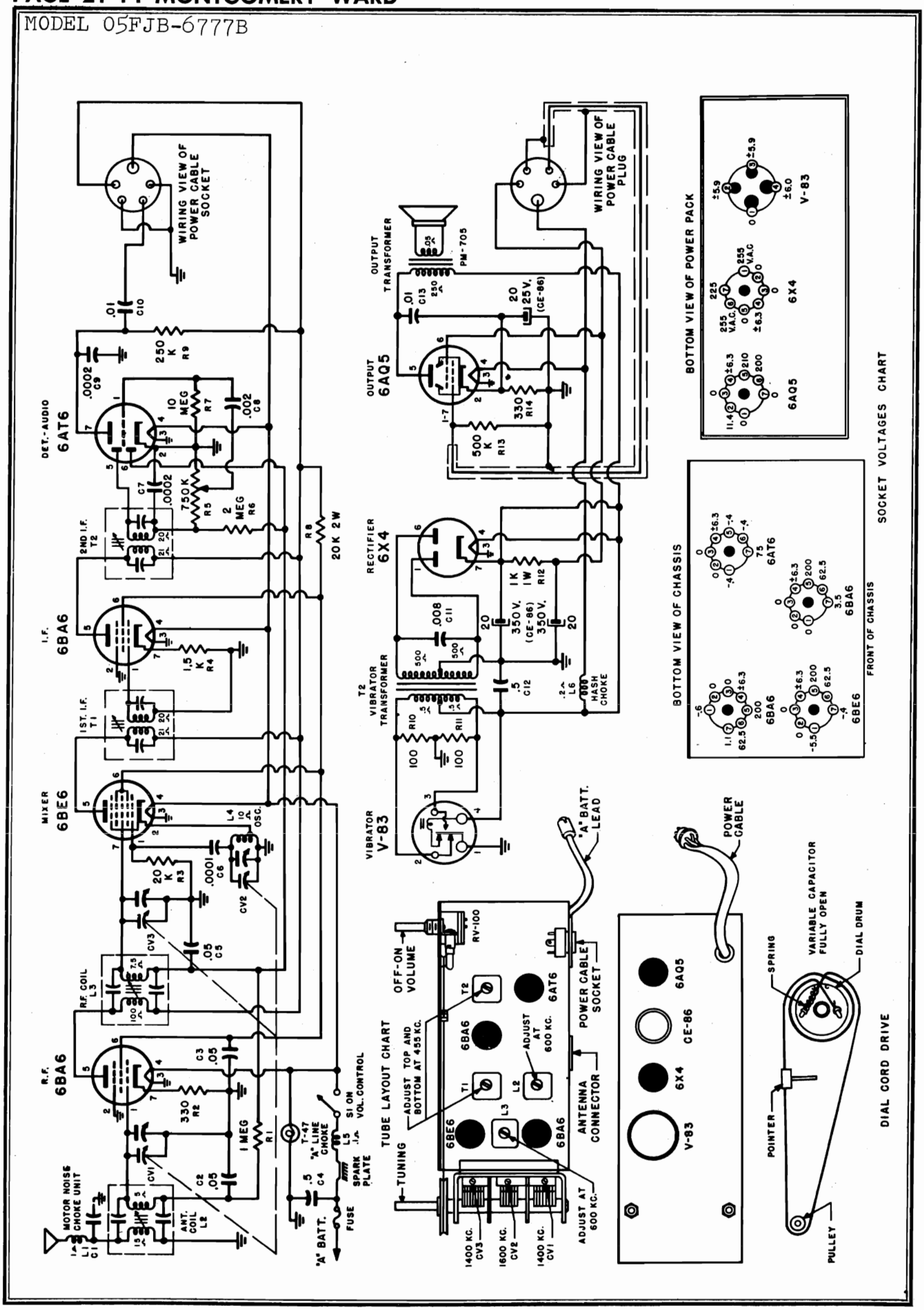

©John F. Rider

Compliments of www.nucow.com

MODELS 05FJB-6777B, 61-6777, Ford, 1949-1950

REPLACEMENT PARTS LIST

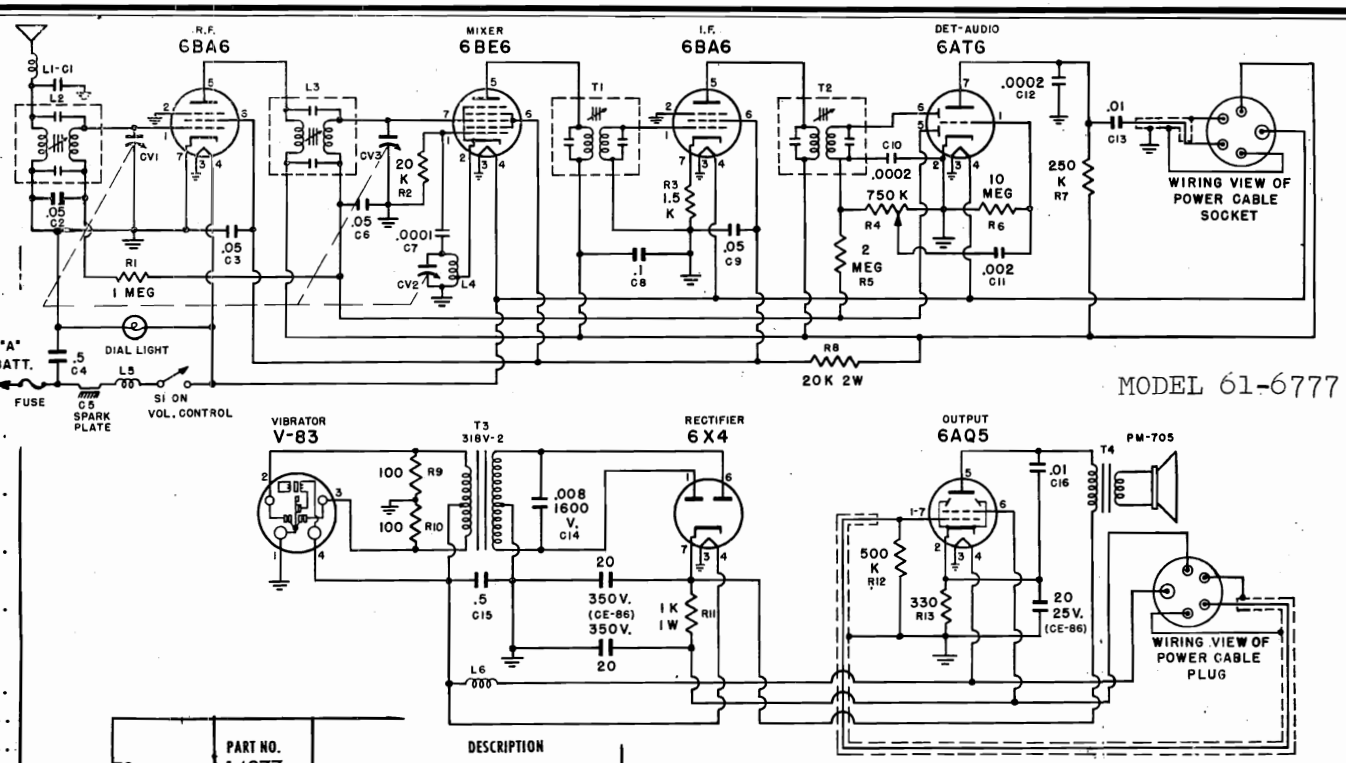

SCHEMATIC DIAGRAM REF. NO.	PART NO.	DESCRIPTION
		CONDENSERS
C2, C3, C5	C207	.05 MFD 200 volt condenser...
C4, C12	C209	.5 MFD 100 volt condenser....
C6	CC200	100 MMFD ceramic condenser.
C7, C9	CC201	200 MMFD ceramic condenser..
C8	C203	.002 MFD 400 volt condenser..
C10, C13	C206	.01 MFD 400 volt condenser...
C11	C205	.008 MFD 1600 volt condenser
CE-86	CE-86	20 MFD 350 volt electrolytic condenser..... 20 MFD 350 volt electrolytic condenser..... 20 MFD 25 volt electrolytic condenser.....
CV1-CV2-CV3	CV-100A	3 section variable.....
		RESISTORS
R1	R309	1 megohm ½ watt 20% resistor.
R2, R14	R303	330 ohm ½ watt 20% resistor...
R3	R306	20K ohm ½ watt 20% resistor...
R4	R314	1.5K ohm ½ watt 20% resistor...
R5	RV-100	Volume control ¾ megohm with switch.....
R6	R310	2 megohm ½ watt 20% resistor..
R7	R311	10 megohm ½ watt 20% resistor.
R8	R313	20K ohm 2 watt 20% resistor....
R9	R307	250K ohm ½ watt 20% resistor..
R10, R11	R301	100 ohm ½ watt 20% resistor....
R12	R312	1K ohm 1 watt 20% resistor.....
R13	R308	500K ohm ½ watt 20% resistor..
		COILS AND TRANSFORMERS
L1-C1	L200	Motor noise elimination unit....
L2	15053 or 57FB-3	Antenna coil.....
L3	15054 or 57FB-4	R.F. coil.....
L4	L201	R. F. oscillator coil.....
L5	L203	Choke "A" line.....
L6	L202	Choke, vibrator hash.....

	PART NO.	DESCRIPTION
T2	14977 or 1655-16	2nd IF transformer.....
T1	14977 or 1655-16	1st IF transformer.....
T3	TV-100 or 318V-2	Vibrator transformer.....
T4		Output transformer (Part of speaker not furnished separately)....
		DIAL PARTS
D100		Dial Scale Escutcheon, Plastic.....
PS100		Dial Pointer.....
T47		Pilot Light.....
H114		Pilot Light Socket.....
H203		Pulley, idler.....
H204		Spring, Dial drive String Tension.....
H115		String, dial drive.....
		MISCELLANEOUS
A300		"A" lead assembly.....
H301		Case, less covers for Power Supply Unit..

H100	Case, complete with covers for R.F. tuning unit.....
H207	Clip, Anti-rattle.....
H208	Clip, coil mounting.....
H102	Cover, power supply unit mounting (with speaker louvres).....
A201	Fuse 15 Amp.....
504PC-300	Power Cable Assembly (complete with plug).....
H212	Receptacle, Antenna cable.....
504-FC	Socket, power cable.....
PM-705	Speaker, 5¼" PM (includes output transformer).....
V-83	Vibrator.....
H310	Knob.....
H311	Cup washer.....
H113	7/16—28 Hex nut.....
C100	.5 MFD generator condenser.....
R100	Distributor suppressor.....

© John F. Rider

Compliments of www.nucow.com

MODEL 05FJB-6778B,
Dodge, Plymouth,
1949-1950

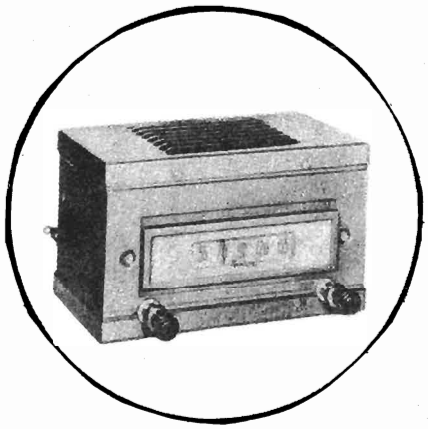

INSTALLATION

PLYMOUTH P18 SPECIAL DELUXE

1. Remove six screws securing Radio Grille in place and remove Radio Grille.

2. Remove dummy plates covering radio dial and control openings.

3. Remove knobs, cup washers, hex nuts and washers from control shafts and mounting bushings.

4. Secure two mounting brackets to Radio Grille with ⅜ inch long 10-32 self-tapping screws, lockwashers, and cup washers as shown in detail assembly, Fig. 1.

5. Place radio controls cover plate over mounting bushings.

6. Position receiver behind Radio Grille so that mounting bushings and shafts protrude through the grille.

7. Attach receiver by replacing washers and hex nuts on mounting bushings.

8. Replace cup washers and knobs over shafts.

9. Secure receiver to mounting brackets with two No. 8 self-tapping thumb screws.

10. Insert radio with attached grille through front opening on instrument panel.

11. Replace grille mounting screws.

12. Connect battery lead to terminal marked "ACC" on ignition switch.

13. Plug antenna cable into receiver.

DODGE "CORONET"

Install in the same manner as outlined for the P18 DeLuxe Plymouth except do not remove radio grille.

PLYMOUTH P17, P18 4-DOOR DELUXE AND P18 CLUB COUPE DELUXE DODGE "WAYFARER" AND "MEADOWBROOK"

These models are not equipped by the car manufacturers with a radio grille.

The following parts must be obtained from any authorized Plymouth or Dodge dealer before an installation can be made in any of these cars.

Plymouth P17, P18 4-Door DeLuxe, P18 Club Coupe DeLuxe
Radio Grill No. 1299913

Dodge "Meadowbrook" or "Wayfarer"
Radio Grill No. 1301360

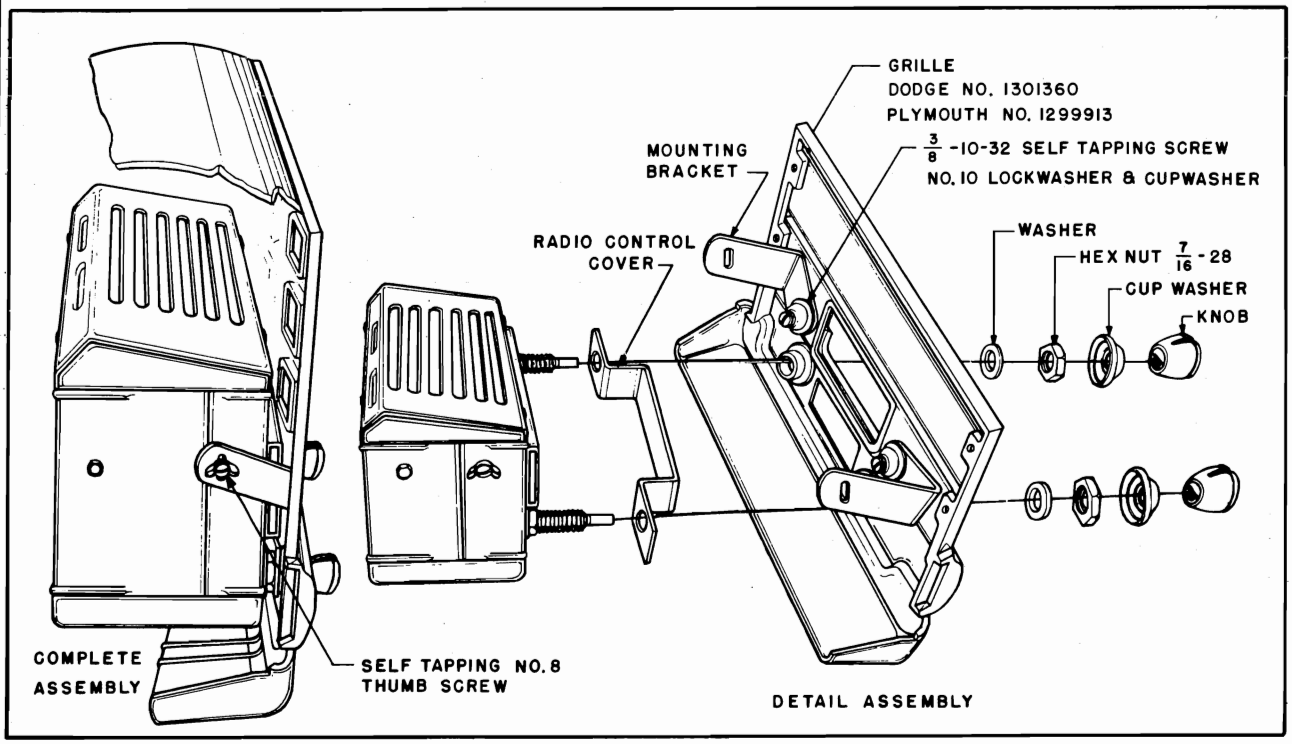

FIG. 1 RECEIVER MOUNTING DIAGRAM

©John F. Rider

Compliments of www.nucow.com

MODELS 05FJB-6778B, 61-6778, Dodge, Plymouth, 1949-1950

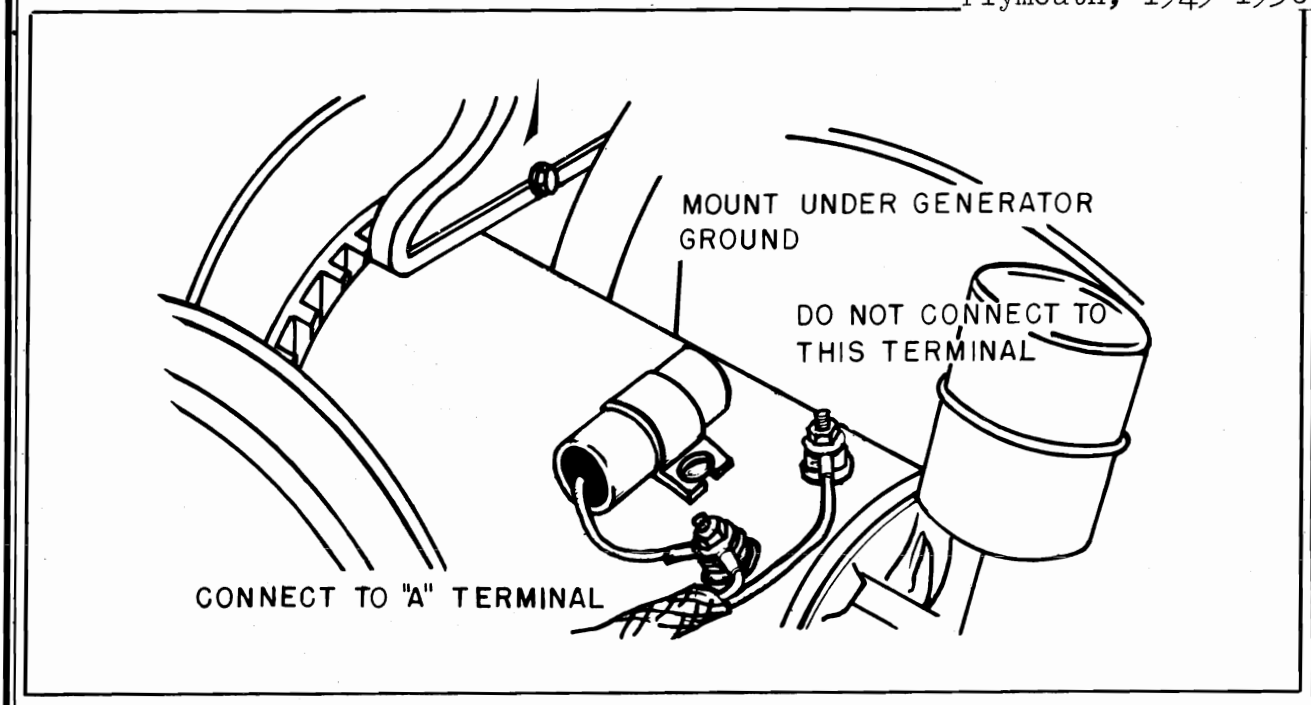

FIG. 2 GENERATOR CONDENSER

ACCESSORIES FURNISHED FOR INSTALLATION

Mounting Parts Kit

The following mounting hardware parts are shipped attached to the receiver. (See detail assembly drawing Fig. 1)

- 2 Washers
- 2 7/16-28 hex nuts
- 2 Cup washers
- 2 Knobs
- 2 Mounting Brackets
- 2 No. 8 self-tapping thumb screws
- 1 Radio control cover

An envelope containing additional mounting hardware is supplied with this receiver. It contains the following parts:

- 2 3/8 10-32 self-tapping screws
- 2 Cup washers
- 2 No. 10 lockwashers

MOTOR NOISE ELIMINATION

SUPPRESSION KIT

A suppression kit is shipped with this receiver. It contains the following parts:

- 1 Distributor Suppressor
- 1 .5 MFD Generator Condenser

DISTRIBUTOR SUPPRESSOR

NOTE: 1950 Dodge and Plymouth automobiles do *not* require distributor suppressors.

1949 DODGE AND PLYMOUTH: Remove metal tip from the distributor center tower lead and screw lead into the suppressor. Plug suppressor with attached lead back into distributor head.

GENERATOR CONDENSER

The generator condenser and distributor suppressor should eliminate all objectionable motor noise in most cases. If the motor noise persists the following steps should be taken. Check operation of radio as each step is made.

WHEEL STATIC

Wheel static is a form of interference caused by the rotation of the front wheels of the car, and it is, of course, only noticed when the car is in motion. If this form of interference is present, it can be eliminated by installing wheel static collector springs between the inner hub cap and the spindle shaft.

AMMETER CONDENSER

A .5 MFD by-pass condenser should be connected to either side of the ammeter with the ground lug fastened to a good ground nearby.

ELECTRICAL ACCESSORIES

In some cases, it may be found that car accessories such as electric heaters, lighters, automatic relays or gauges, may cause interference while in operation. Proper procedure in such cases is to connect a .5 MFD by-pass condenser from ground to the suspected accessory until the source of interference is found. The condenser then should be permanently mounted in this location.

©John F. Rider

Compliments of www.nucow.com

MODELS 05FJB-6778B,
61-6778, Dodge,
Plymouth, 1949-1950

SERVICE DATA

ELECTRICAL SPECIFICATIONS

Power Supply .....6.3 Volts DC
Current .....5.5 Amp. average
Frequency Range .....538-1600 KC
Speaker .....5" PM 3.2 Ohm V.C.
Power Output .....2 watts, undistorted
3 watts, maximum
Sensitivity ..... 2-3 microvolts average for 1 watt output
Selectivity .. 40 KC broad at 1000 times signal, at 1000 KC

This receiver contains the following:

1 — 6BA6 — RF Amplifier
1 — 6BE6 — Converter
1 — 6BA6 — I. F. Amplifier
1 — 6AT6 — Detector — AVC—1st Audio
1 — 6AQ5 — Power Output
1 — 6X4 — Rectifier

SERVICE NOTES

Voltage taken from the different points of the circuit to the chassis are measured with volume control in maximum position, all tubes in their sockets, no signal applied, and with a volt meter having a resistance of 20,000 Ohms per volt. These voltages are clearly shown on the voltage chart.

All voltages should be measured with an input voltage of 6.3 volts DC.

To check for open by-pass condensers, shunt each condenser with another one having the same capacity and voltage rating which is known to be good until the defective unit is located.

ALIGNING INSTRUCTION

Never attempt any adjustments on this receiver unless it becomes necessary to replace a coil or transformer, or the adjustments have been tampered with in the field. Always make certain that other circuit components, such as tubes, condensers, resistors, etc., are normal before proceeding with realignment.

If realignment is necessary follow the instructions given under the heading "Alignment Procedure." After realignment has been completed repeat the procedure as final check.

INSTRUCTIONS FOR SERVICING RECEIVER COMPONENTS

The novel design of this receiver permits servicing all components without removing the chassis from the case. The top cover (the one with the speaker louvres) can be removed by removing the four (4) screws securing it to the case. This exposes all tube sockets, connectors, resistors and condensers for observation and service.

Removing the bottom cover makes it possible to service tubes, vibrator, and volume control.

ALIGNMENT PROCEDURE

Volume control — Maximum all adjustments.
No signal applied to antenna.
Power input — 6.3 volts.
Connect dummy antenna in series with output lead of signal generator.
Connect ground lead of signal generator to chassis.
Repeat alignment procedure as a final check.

The following equipment is necessary for proper alignment:
Signal generator that will provide the test frequencies as listed, modulated 400 cycles, 30%.
Non-metallic screwdriver.
Output meter. (1.8 volt for 1 watt output.)
Dummy antennas — .1 MFD., 100 MMFD.
For alignment points refer to Schematic Diagram.

DIAL SETTING	GENERATOR FREQUENCY	DUMMY ANT.	GENERATOR CONNECTION	TRIMMER REFERENCE	TRIMMER ADJUSTMENT	TRIMMER FUNCTION
1) Fully open	455 KC	.1 MFD	6BE6 Grid	T2 Top & bottom	Maximum	Output I.F.
2) Fully open	455 KC	.1 MFD	6BE6 Grid	T1 Top & bottom	Maximum	Input I.F.
3) Fully open	1600 KC	100 MMFD	Ant. lead	CV2	Maximum	Oscillator
4) Tune in signal from generator	1400 KC	100 MMFD	Ant. lead	CV3	Maximum	RF Stage
5) Tune in signal from generator	1400 KC	100 MMFD	Ant. lead	CV1	Maximum	Antenna
6) Tune in signal from generator	600 KC	100 MMFD	Ant. lead	L3	Maximum	RF Stage
7) Tune in signal from generator	600 KC	100 MMFD	Ant. lead	L2	Maximum	Antenna
8) Repeat steps 4 and 5						

©John F. Rider

Compliments of www.nucow.com

MODELS 05FJB-6778B,
Dodge,
Plymouth, 1949-1950

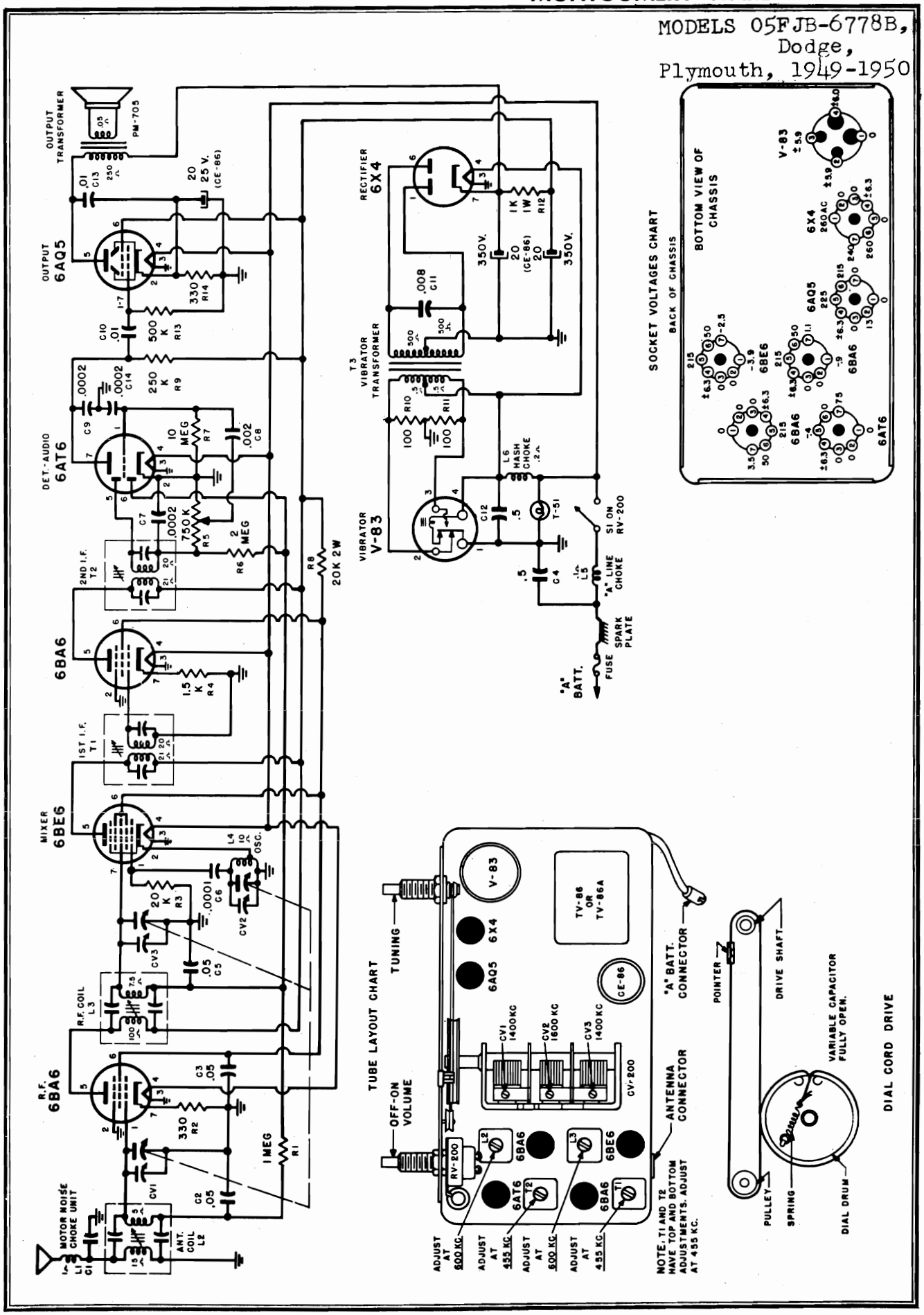

©John F. Rider

Compliments of www.nucow.com

MODELS 05FJB-6778B, 61-6778, Dodge, Plymouth, 1949-1950

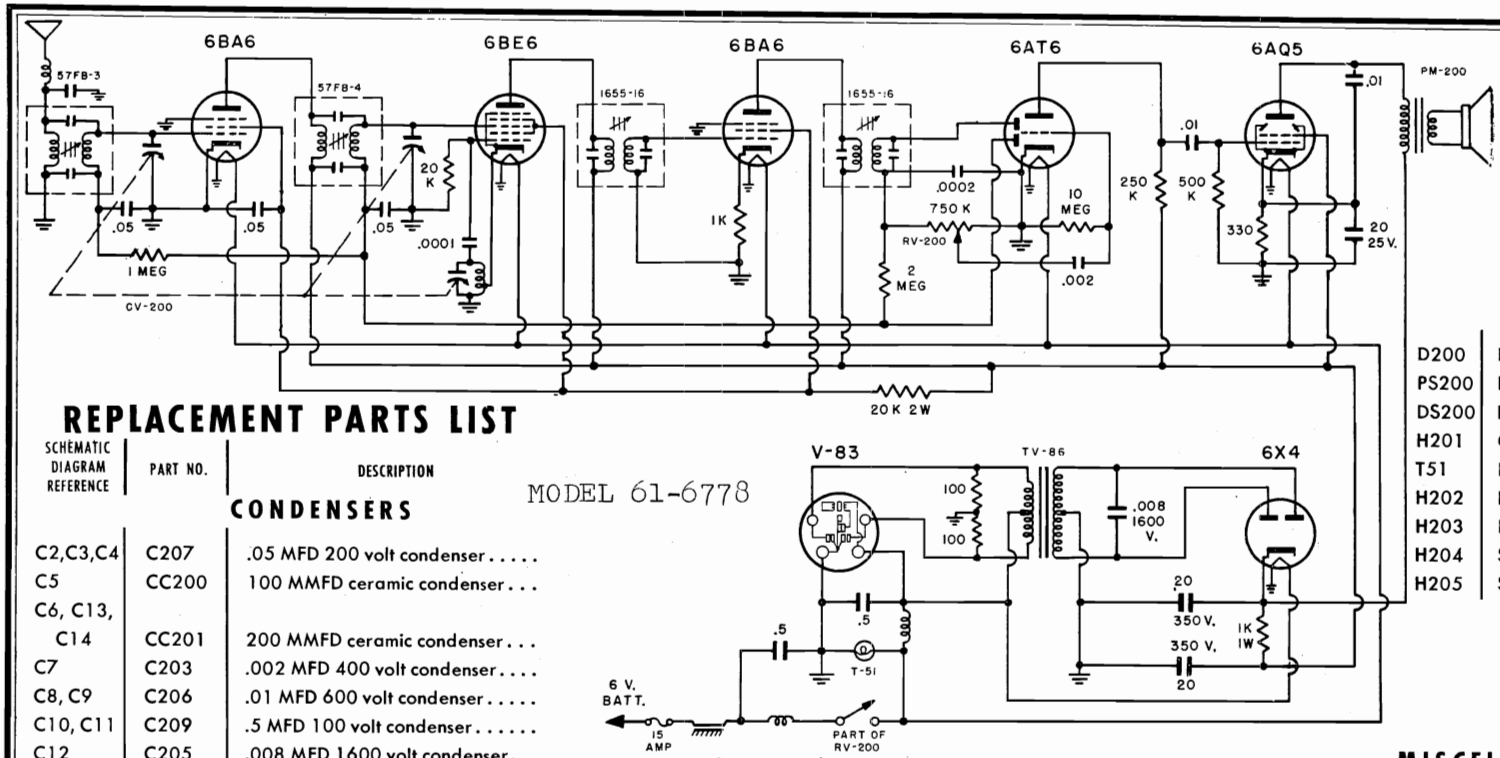

MODEL 61-6778

REPLACEMENT PARTS LIST

SCHEMATIC DIAGRAM REFERENCE	PART NO.	DESCRIPTION
		CONDENSERS
C2,C3,C4	C207	.05 MFD 200 volt condenser.....
C5	CC200	100 MMFD ceramic condenser...
C6, C13, C14	CC201	200 MMFD ceramic condenser...
C7	C203	.002 MFD 400 volt condenser....
C8, C9	C206	.01 MFD 600 volt condenser.....
C10, C11	C209	.5 MFD 100 volt condenser.....
C12	C205	.008 MFD 1600 volt condenser...
CE-86	CE-86	20 MFD 350 volt electrolytic condenser.....
		20 MFD 350 volt electrolytic condenser.....
		20 MFD 25 volt electrolytic condenser.....
CV-200	CV-200	3 section variable tuning condenser
		RESISTORS
R1	R309	1 megohm ½ watt 20% resistor..
R2	R306	20K ohm ½ watt 20% resistor....
R3	R314	1.5K ohm ½ watt 20% resistor...
R4	R310	2 megohm ½ watt 20% resistor..
R5	R311	10 megohm ½ watt 20% resistor.
R6	R307	250K ohm ½ watt 20% resistor..
R7	R308	500K ohm ½ watt 20% resistor..
R8, R13	R303	330 ohm ½ watt 20% resistor....
R9	R313	20K ohm 2 watt 20% resistor....
R10, R11	R301	100 ohm ½ watt 20% resistor....
R12	R312	1K ohm 1 watt 20% resistor.....
RV-200	RV-200	Volume control ¾ megohm with switch.....
		COILS AND TRANSFORMERS
L1-C1	L200	Motor noise elimination unit.....
L2	57FB-3	Antenna Coil.....
L3	57FB-4	RF coil.....
L4	L201	RF Oscillator coil.....
L5	L202	Choke, vibrator hash.....
L6	L203	Choke, "A" line.....
T1	1655-16	1st IF transformer.....
T2	1655-16	2nd IF transformer.....
T3		Output transformer (Part of speaker not furnished separately)....
T4	TV-86 or TV-86A	Vibrator transformer.....

DIAL PARTS

D200	Dial Scale.....
PS200	Dial Pointer.....
DS200	Drive shaft assembly.....
H201	Grommet, rubber drive.....
T51	Pilot light.....
H202	Pilot light socket.....
H203	Pulley, idler.....
H204	Spring, Dial Drive String Tension
H205	String, Dial Drive.....

MISCELLANEOUS

A200	"A" lead assembly.....
H216	Bracket, mounting.....
H206	Case, (less covers).....
H207	Clip, antirattle.....
H208	Clip, coil mounting.....
H209	Cover, bottom case.....
H218	Cover, radio control.....
H210	Cover, top case (with speaker louvres)...
H311	Cup washers, shaft.....
A201	Fuse, 15 amp.....
H211	Grommet, rubber, gang mounting.....
H310	Knob.....
H217	Nuts, mounting.....
H212	Receptacle, antenna cable.....
PM-250	Speaker, 5" PM includes output transformer
V-83 or V-94	Vibrator.....
H113	7/16—28 Hex nut.....
C100	.5 MFD Generator condenser.....
R100	Distributor suppressor.....

©John F. Rider

Compliments of www.nucow.com

MODELS 05FJB-6779B, 61-6779, Chevrolet, 1949-1950

INSTALLATION

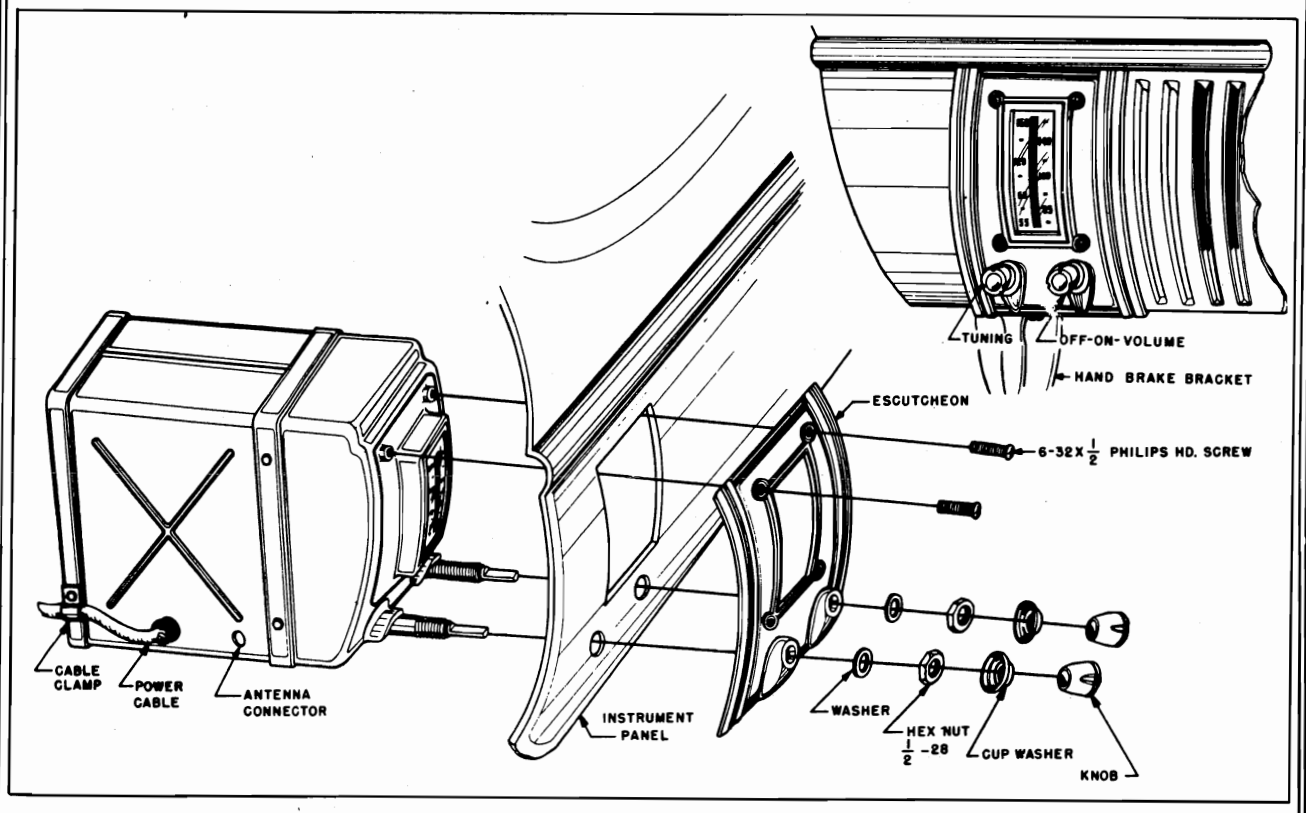

FIG. 1 R.F. TUNING UNIT DETAIL MOUNTING ASSEMBLY

R. F. TUNING UNIT

1. Loosen nuts on the two moulding studs located behind the instrument panel cover plate.

2. Remove sheet metal screw from the lower edge of the instrument panel cover plate and the two screws and washers attaching the hand brake to the instrument panel. Keep these parts.

3. Remove instrument panel cover plate and discard.

4. Tighten nuts on the two moulding studs located behind the instrument panel cover plate.

5. Drop vent controls by removing screws, lockwashers, and flat washers securing these controls to the instrument panel. This will facilitate installation of both receiver units. Save parts removed.

6. Install R.F. Tuning Unit behind instrument panel so that mounting bushings and tuning shafts protrude through the instrument panel.

7. Slide plastic escutcheon over mounting bushings and secure with flat washers, nuts, cup washers, and knobs as shown in Fig. 1.

8. Secure top part of plastic escutcheon to R.F. Tuning Unit with two No. 6-32 x ½" long Philips Head screws.

POWER SUPPLY UNIT

1. Insert a thin blade screwdriver or a flat strip of metal through the Radio Grille and slit fiberboard Radio Grille screen. Reach in back of Radio Grille and remove screen by grasping slit edge. Discard fiberboard screen.

2. Remove 10-32 nuts and washers from the moulding studs behind the Radio Grille.

3. Remove 10-32 nuts, screws, and washers securing the lower tabs of the Radio Grille to the instrument panel.

4. Install Power Supply Unit behind Radio Grille and position into place so that holes in top of unit slide over moulding studs as shown in Fig. 2.

NOTE: It may be more convenient, in car models with air conditioner heaters, to remove the vibrator before installing this unit. The vibrator can be replaced after the power unit is mounted.

5. Replace 10-32 nuts and washers on moulding studs.

6. Replace lower grille tab 10-32 mounting screws, nuts, and washers so that screws secure the lower grille tabs and Power Supply Unit to the instrument panel.

7. Connect cable from Power Supply Unit to R.F. Tuning Unit.

8. Secure Power Supply Cable under clamp on R.F. Tuning Unit.

9. Replace vent controls.

10. Replace screws and washers securing hand brake. Connect battery lead to terminal on Ignition Switch. Plug Antenna cable into receiver.

©John F. Rider

Compliments of www.nucow.com

MODELS 05FJB-6779B,
61-6779, Chevrolet,
1949-1950

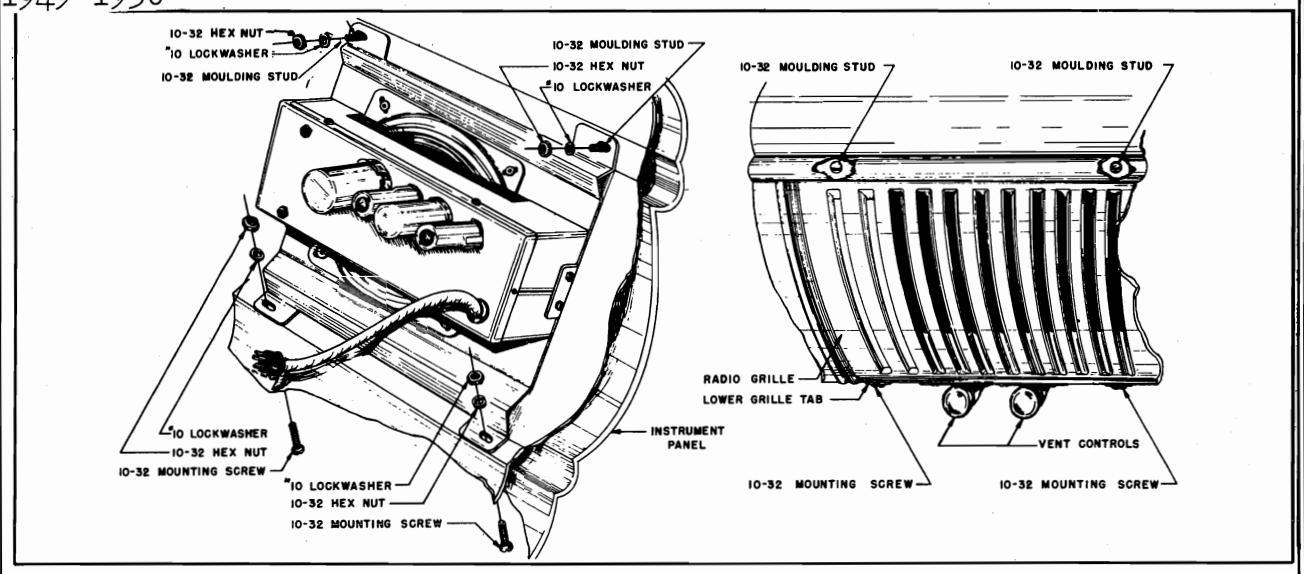

FIG. 2 POWER SUPPLY UNIT DETAIL MOUNTING ASSEMBLY

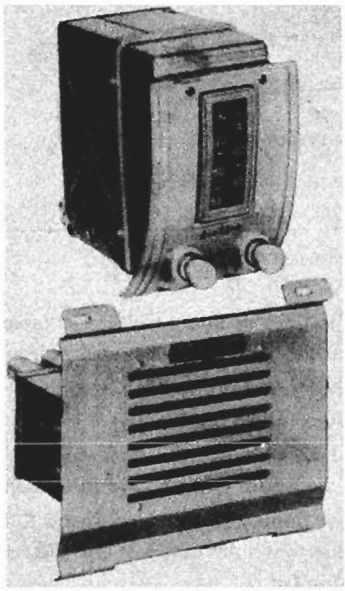

MOTOR NOISE ELIMINATION

SUPPRESSION KIT

A suppression kit is shipped with this receiver. It contains the following parts:

1 Distributor Suppressor. 1 Generator Condenser.

DISTRIBUTOR SUPPRESSOR

Disconnect the center lead in the distributor head of the motor. Cut lead approximately 2 inches back from metal tip end. Screw suppressor into cut end of long lead. Screw cut end of short lead into suppressor. Plug lead, with attached suppressor, back into distributor head.

GENERATOR CONDENSER

The generator condenser and distributor suppressor will normally eliminate all objectionable motor noise. If the motor noise persists, a .5 MFD by-pass condenser may be connected to either side of the ammeter with the ground lug fastened to a good ground nearby.

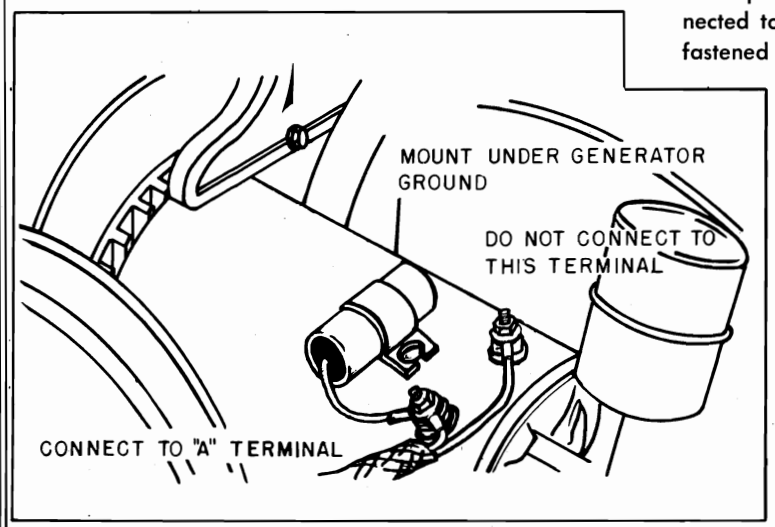

FIG. 3 GENERATOR CONDENSER

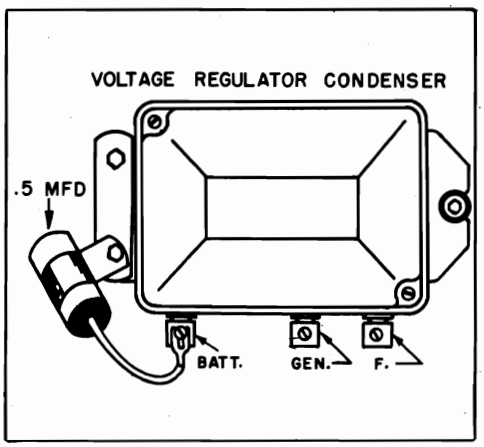

FIG. 4 VOLTAGE REGULATOR CONDENSER

©John F. Rider

Compliments of www.nucow.com

MODELS 05FJB-6779B, 61-6779, Chevrolet, 1949-1950

VOLTAGE REGULATOR

Voltage Regulator contacts may cause interference in some cases. Connect a .5 MFD by-pass condenser from ground to the "BATT" terminal on the voltage regulator to eliminate this source of interference.

WHEEL STATIC

Wheel static is a form of interference caused by the rotation of the front wheels of the car, and it is, of course, only noticed when the car is in motion. If this form of interference is present, it can be eliminated by installing wheel static collector springs between the inner hub cap and the spindle shaft.

ELECTRICAL ACCESSORIES

In some cases, it may be found that car accessories such as electric heaters, lighters, automatic relays or gauges, may cause interference while in operation. Proper procedure in such cases is to connect a .5 MFD by-pass condenser from ground to the suspected accessory until the source of interference is found. The condenser then should be permanently mounted in this location.

SERVICE DATA

ELECTRICAL SPECIFICATIONS

Power Supply ..... 6.3 Volts DC
Current ..... 5.5 Amp. average
Frequency Range ..... 538-1600 KC
Speaker ..... 5¼" PM 3.2 Ohm V.C.
Power Output ..... 2 watts, undistorted 3 watts, maximum
Sensitivity ..... 2-3 microvolts average for 1 watt output
Selectivity ..... 40 KC broad at 1000 times signal, at 1000 KC

This receiver contains the following:

1 - 6BA6 — RF Amplifier
1 - 6BE6 — Converter
1 - 6BA6 — I. F. Amplifier
1 - 6AT6 — Detector — AVC — 1st Audio
1 - 6AQ5 — Power Output
1 - 6X4 — Rectifier

SERVICE NOTES

Voltage taken from the different points of the circuit to the chassis are measured with volume control in maximum position, all tubes in their sockets, no signal applied, and with a volt meter having a resistance of 20,000 Ohms per volt. These voltages are clearly shown on the voltage chart.

All voltages should be measured with an input voltage of 6.3 volts DC.

To check for open by-pass condensers, shunt each condenser with another one having the same capacity and voltage rating which is known to be good until the defective unit is located.

ALIGNING INSTRUCTION

Never attempt any adjustments on this receiver unless it becomes necessary to replace a coil or transformer, or the adjustments have been tampered with in the field. Always make certain that other circuit components such as tubes, condensers, resistors, etc., are normal before proceeding with realignment.

If realignment is necessary follow the instructions given under the heading "Alignment Procedure." After realignment has been completed repeat the procedure as final check.

ALIGNMENT PROCEDURE

Volume control — Maximum all adjustments.
No signal applied to antenna.
Power input — 6.3 volts.
Connect dummy antenna in series with output lead of signal generator.
Connect ground lead of signal generator to chassis.
Repeat alignment procedure as a final check.

The following equipment is necessary for proper alignment:
Signal generator that will provide the test frequencies as listed, modulated 400 cycles, 30%.
Non-metallic screwdriver.
Output meter. (1.8 volt for 1 watt output.)
Dummy antennas — .1 MFD., 100 MMFD.

For alignment points refer to Schematic Diagram.

DIAL SETTING	GENERATOR FREQUENCY	DUMMY ANT.	GENERATOR CONNECTION	TRIMMER REFERENCE	TRIMMER ADJUSTMENT	TRIMMER FUNCTION
1) Fully open	455 KC	.1 MFD	6BE6 Grid	T2 Top & bottom	Maximum	Output I.F.
2) Fully open	455 KC	.1 MFD	6BE6 Grid	T1 Top & bottom	Maximum	Input I.F.
3) Fully open	1600 KC	100 MMFD	Ant. lead	CV2	Maximum	Oscillator
4) Tune in signal from generator	1400 KC	100 MMFD	Ant. lead	CV3	Maximum	RF Stage
5) Tune in signal from generator	1400 KC	100 MMFD	Ant. lead	CV1	Maximum	Antenna
6) Tune in signal from generator	600 KC	100 MMFD	Ant. lead	L3	Maximum	RF Stage
7) Tune in signal from generator	600 KC	100 MMFD	Ant. lead	L2	Maximum	Antenna
8) Repeat steps 4 and 5						

©John F. Rider

Compliments of www.nucow.com

MODEL 05FJB-6779B,
Chevrolet, 1949-1950

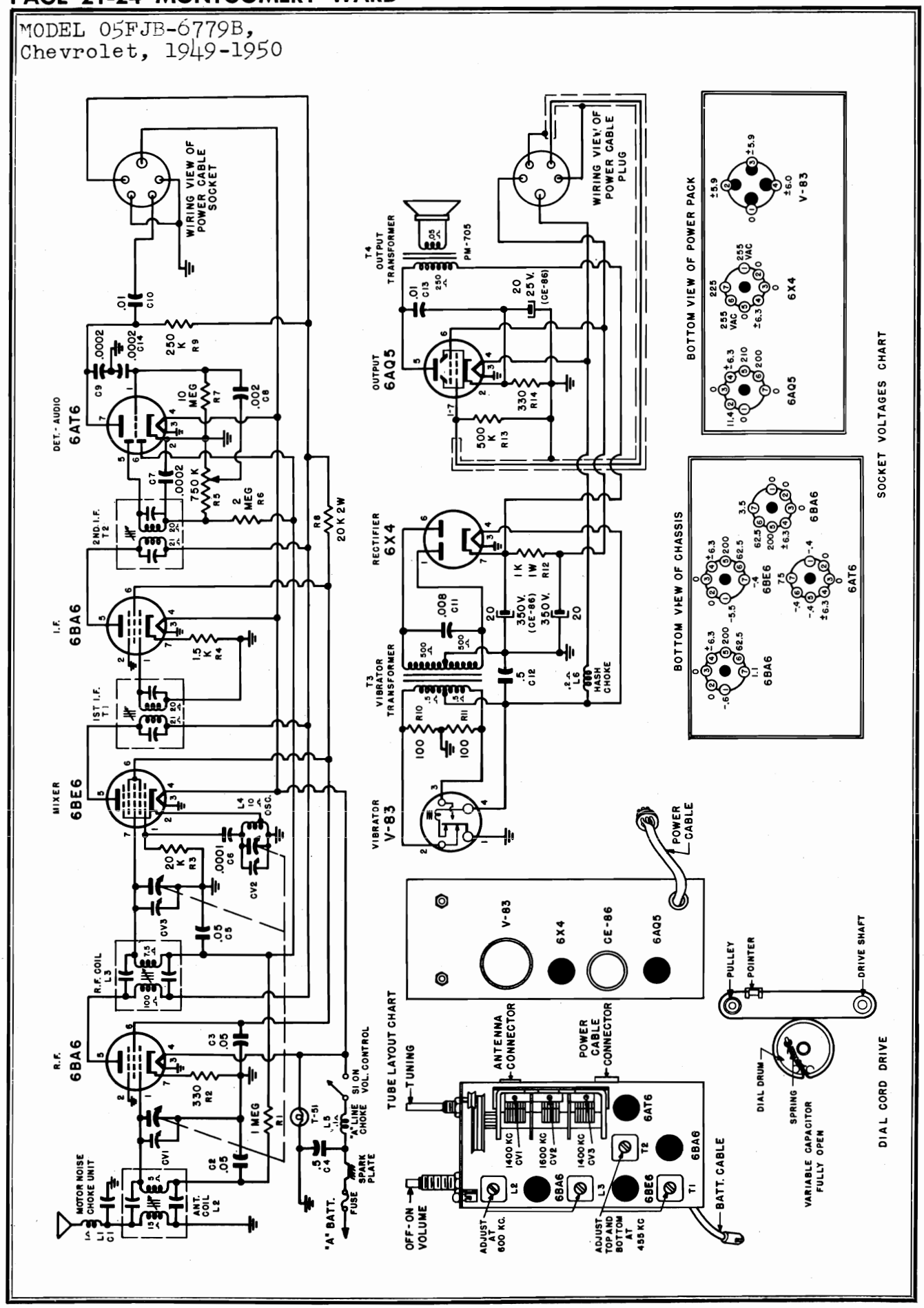

©John F. Rider

Compliments of www.nucow.com

MODEL 61-6779,
Chevrolet, 1949-1950

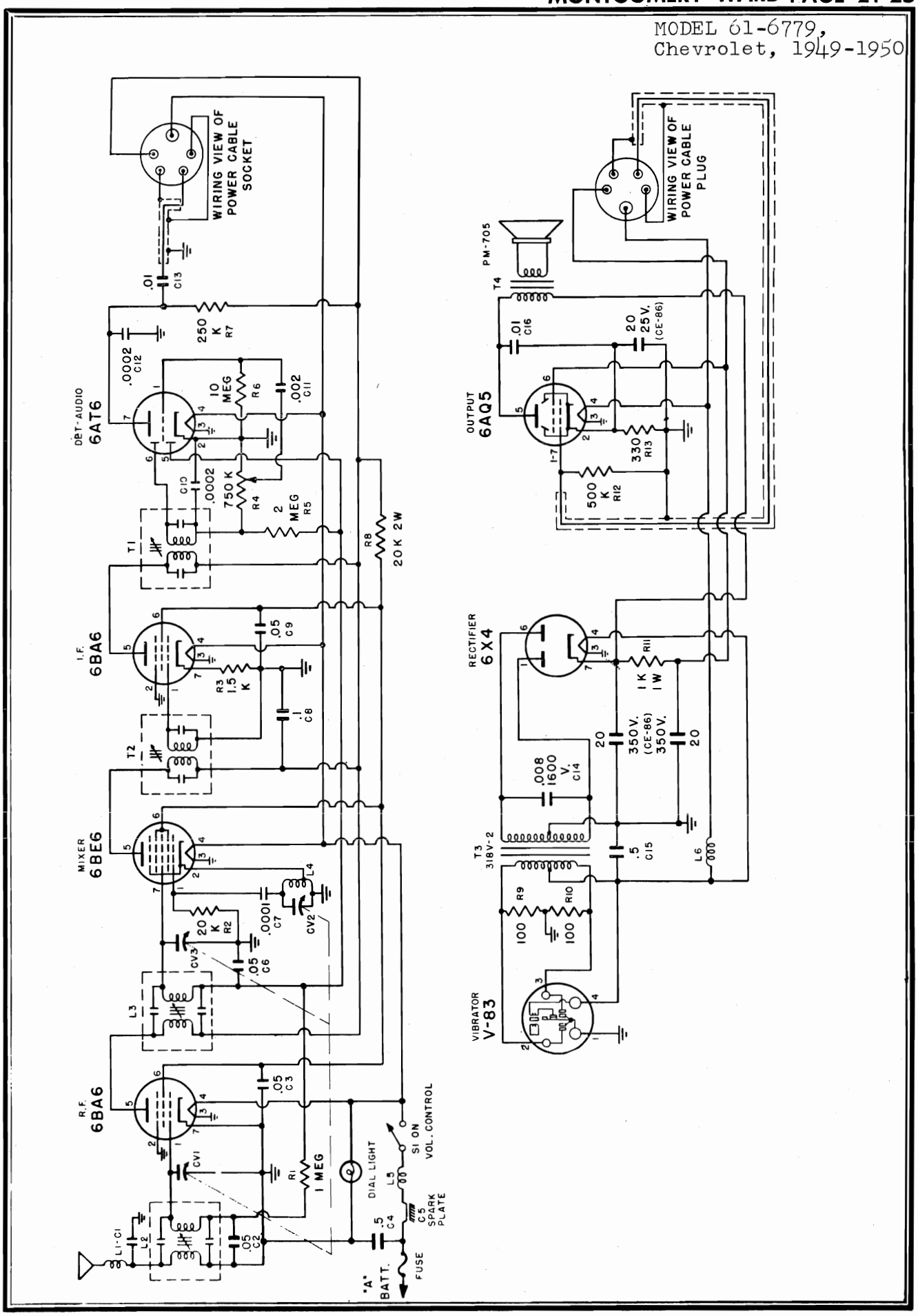

©John F. Rider

Compliments of www.nucow.com

MODELS 05FJB-6779B,
61-6779, Chevrolet,
1949-1950

REPLACEMENT PARTS LIST

SCHEMATIC DIAGRAM REFERENCE	PART NO.	DESCRIPTION
		CONDENSERS
C2,C3,C5	C207	.05 MFD 200 Volt Condenser....
C4, C12	C209	.5 MFD 100 Volt Condenser.....
C6	CC200	100 MMFD Ceramic Condenser..
C7, C9. C14	CC201	200 MMFD Ceramic Condenser..
C8	C203	.002 MFD 400 Volt Condenser...
C10, C13	C206	.01 MFD 600 Volt Condenser....
C11	C205	.008 MFD 1600 Volt Condenser..
CE-86	CE-86	20 MFD 350 Volt Electrolytic Condenser.....
		20 MFD 350 Volt Electrolytic Condenser.....
		20 MFD 25 Volt Electrolytic Condenser.....
CV1-CV2-CV3	CV-300	3 Section Variable Tuning.....
		RESISTORS
R1	R309	1 megohm ½ Watt 20% Resistor.
R2, R14	R303	330 Ohm ½ Watt 20% Resistor..
R3	R306	20K Ohm ½ Watt 20% Resistor..
R4	R314	1.5K Ohm ½ Watt 20% Resistor.
R5	RV300	Volume Control ¾ megohm with switch.....
R6	R310	2 megohm ½ Watt 20% Resistor.
R7	R311	10 megohm ½ Watt 20% Resistor
R8	R313	20K Ohm 2 Watt 20% Resistor...
R9	R307	250K Ohm ½ Watt 20% Resistor.
R10, R11	R301	100 Ohm ½ Watt 20% Resistor..
R12	R312	1K Ohm 1 Watt 20% Resistor....
R13	R308	500K Ohm ½ Watt 20% Resistor.
		COILS AND TRANSFORMERS
L1-C1	L200	Motor noise elimination unit.....
L2	15053 or 57FB-3	Antenna coil.....
L3	15054 or 57FB-4	R.F. coil.....
L4	L201	R.F. oscillator coil.....
L5	L203	Choke, "A" line.....
L6	L202	Choke, vibrator hash.....

SCHEMATIC DIAGRAM REFERENCE	PART NO.	DESCRIPTION
T1	14977 or 1655-16	1st IF transformer.....
T2	14977 or 1655-16	2nd IF transformer.....
T3	TV-100	Vibrator transformer.....
T4		Output transformer (Part of speaker not furnished separately)

PART NO.	DIAL PARTS
D300	Dial scale.....
PS300	Dial Pointer.....
DS300	Drive Shaft Assembly.....
H201	Grommet, rubber drive.....
T51	Pilot Light.....
H214	Pilot Light Socket.....
H203	Pulley, idler.....
H204	Spring, Dial drive String Tension.....
H215	String, dial drive.....
	MISCELLANEOUS
A300	"A" lead assembly.....
H301	Case, less covers for Power Supply Unit..
H300	Case, complete with covers for R.F. tuning unit.....
H207	Clip, Anti-rattle.....
H208	Clip, coil mounting.....
H302	Cover, power supply unit mounting (with speaker louvres) .....
A201	Fuse, 15 Amp.....
504PC-300	Power Cable Assembly (complete with plug).....
H212	Receptacle, Antenna cable.....
504-FC	Socket, power cable.....
PM-705	Speaker, 5¼" PM (includes output transformer).....
V-83	Vibrator.....
H310	Knob.....
H311	Cup washer.....
H312	Plastic Escutcheon.....
H313	½ x 28 hex nut.....
C100	.5 MFD Generator Condenser.....
R100	Distributor Suppressor.....

©John F. Rider

Compliments of www.nucow.com

MODEL 94WG-1811A

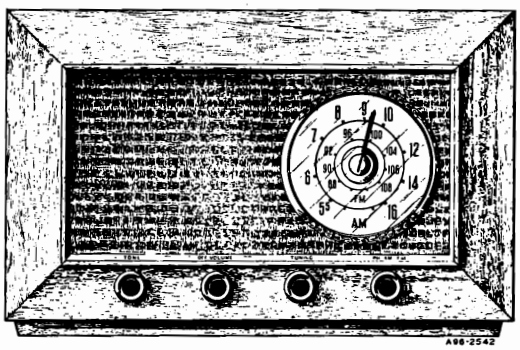

GENERAL DESCRIPTION

This is a two band, seven tube (plus rectifier tube) AM and FM receiver. Controls are provided at the front of the cabinet for tuning, volume, tone and band or phono selection. Phono input and phono motor sockets are provided at the rear of the receiver to which a record player may be connected. The I-F stages use high gain miniature type tubes. Air Wave Aerials are provided for the FM and Broadcast bands. Features include, a grounded grid R-F amplifier stage on the FM band, compensator circuits to prevent oscillator drift, automatic volume control, beam power output stage, PM dynamic loud speaker and an electrostatic shield in the power transformer to reduce power line noise.

ELECTRICAL SPECIFICATIONS

Power Supply	105-125 volts AC 50-60 cycles, 40 watts.
Frequency Ranges	Broadcast 540-1600 KC Frequency Modulation 88-108 MC
Intermediate Frequency	AM—455KC FM—10.7 MC
Selectivity	AM—45 KC broad at 1000 times signal, measured at 1000 KC I.F. FM—200 KC broad at 2 times down I.F. FM—950 KC broad at 200 times down
AM Sensitivity	(For .5 watt output with external antenna) 50 microvolts average
FM Sensitivity	(For .5 watt output) 25 microvolts average
Power Output	1.9 watts maximum .8 watts 10% distortion
Loud Speaker	6" PM Dynamic
Voice Coil Impedance	3.2 ohms 400 cycles
Tube and Dial Lamp Complement	1 6BE6 AM Converter & FM Osc. 1 6BA6 1st I-F Amplifier 1 6BA6 2nd I-F Amplifier 1 6AL5 FM Discriminator 1 6AV6 Audio Amplifier, AM 2nd Detector and AVC 1 6V6GT Audio Output 1 6X5GT Rectifier 1 12AT7 R-F Amplifier & Mixer 1 No. 47 Dial Lamp

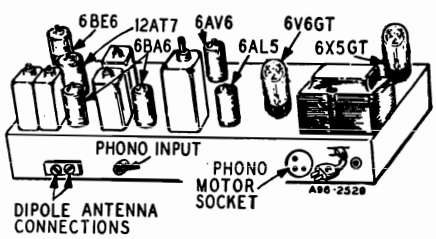

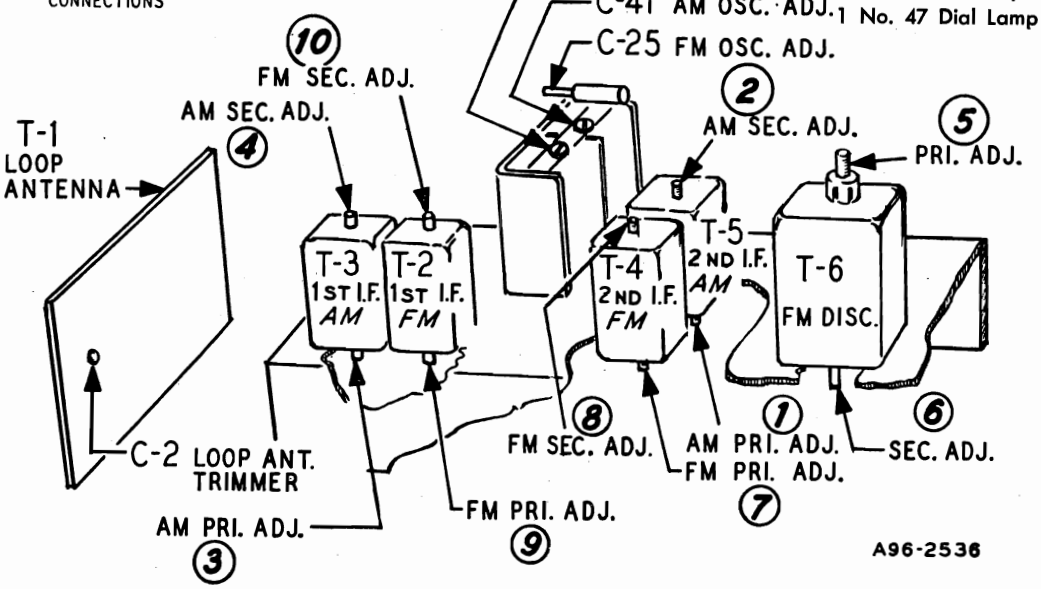

©John F. Rider

Compliments of www.nucow.com

MODEL 94WG-1811A

ALIGNMENT PROCEDURES

AM STAGES

The following is required for aligning:
An All Wave Signal Generator Which Will Provide an Accurately Calibrated Signal at the Test Frequencies as Listed.
Output Indicating Meter, Non-Metallic Screwdriver, Dummy Antennas — .1 mf, and 50mmf.

Volume Control Maximum all Adjustments.
Connect Radio Chassis to Ground Post of Signal Generator with a Short Heavy Lead.
Allow Chassis and Signal Generator to "Heat Up" for Several Minutes.

SIGNAL GENERATOR						
FREQUENCY SETTING	CONNECT GENERATOR OUTPUT TO	THROUGH DUMMY ANTENNA	CONNECT GROUND TO	GANG CONDENSER SETTING	ADJUST	ADJUST FOR
455 KC	Control Grid 1st 6BA6 Pin No. 1	.1 mf	Chassis Base	Rotor Fully Open	2nd I.F. Pri. (1) and Sec. (2)	Maximum Output
455 KC	Control Grid 6BE6 Pin No. 7 1st Det.	.1 mf	Chassis Base	Rotor Fully Open	1st I.F. Pri. (3) and Sec. (4)	Maximum Output
455 KC	Control Grid 6BE6 Pin No. 7	.1 mf	Chassis Base	Rotor Fully Open	2nd I-F Pri. (1) and Sec. (2)	Maximum Output
1620 KC	Control Grid 6BE6 Pin No. 7	.1 mf	Chassis Base	Rotor Fully Open	Oscillator C-41	Maximum Output
1400 KC	External Antenna Clip	50 mmf	Chassis Base	Turn Rotor to Max. Output. Set Pointer to 1400 KC See Note A	Antenna C-2	Maximum Output

NOTE A—If the pointer is not at 1400 KC on the dial, reset pointer to the 1400 KC mark on the dial scale.

FM STAGES

The following is required for aligning:
An accurately calibrated signal generator providing unmodulated signals at the test frequencies listed below.
Non-metallic screwdriver.
Dummy Antennas and I-F Loading Resistor—2500 mmf, 300 ohms

Zero center scale DC vacuum tube voltmeter having a range of approximately 3 volts.
(If a zero center scale meter is not available, a standard scale vacuum tube voltmeter may be used by reversing the meter connections for negative readings).
Allow chassis and signal generator to "Heat Up" for several minutes.

	SIGNAL GENERATOR						
	FREQUENCY SETTING	CONNECT GENERATOR OUTPUT TO	THROUGH DUMMY ANTENNA	BAND SWITCH SETTING	GANG CONDENSER SETTING	ADJUST	ADJUST FOR
Discriminator	10.7 MC	6BA6 2nd I-F Pin 1 and Chassis	2500 mmf	FM	Rotor Fully Open	Disc. Pri. (5) Note A	Maximum Deflection
	10.7 MC	6BA6 2nd I-F Pin 1 and Chassis	2500 mmf	FM	Rotor Fully Open	Disc. Sec. (6) Note B	
I-F	10.7 MC Note C	6BA6 1st I-F Pin 1 and Chassis	2500 mmf	FM	Rotor Fully Open	2nd I-F Pri. (7) Sec. (8) Note D	Maximum Deflection
Discriminator	10.7 MC	6BA6 1st I-F Pin 1 and Chassis	2500 mmf	FM	Rotor Fully Open	Disc. Pri. (5) Note D	Maximum Deflection
I-F	10.7 MC	Junction C-32A & B (Dual 100 mmf cond.) And chassis	2500 mmf	FM	Rotor Fully Open	1st I-F Pri. (9) & Sec. (10) 2nd I-F Pri. (7) & Sec. (8) Disc. Pri. (5) In Order Shown Note D	Maximum Deflection
	10.7 MC	Same as above	2500 mmf	FM	Rotor Fully Open	Disc. Sec. (6) Note B	Maximum Deflection
RECHECK I-F ADJUSTMENTS IN ORDER GIVEN							
Oscillator	108.5	Disconnect hank antenna and connect generator to dipole terminals with resistor in series.	300 ohms	FM	Rotor Fully Open	Osc. C-25	Maximum Deflection
Antenna	104.5	Same as above	300 ohms	FM	Tune rotor for max. AVC voltage	Ant. C-39	Maximum Deflection
RECHECK ANTENNA & OSC. ADJUSTMENTS IN ORDER GIVEN							

FM ALIGNMENT NOTES

NOTE A—The zero center scale DC vacuum tube voltmeter is to be connected between chassis ground and the AVC line. A signal of .1 volt must be fed into the receiver for this adjustment.
Note output voltage on the zero center DC vacuum tube voltmeter

NOTE B—Disconnect zero center DC vacuum tube voltmeter from AVC and connect it at the audio takeoff point at the 27 K ohm resistor (R-10) and its junction with the terminal strip. Adjust for zero voltage indication.

NOTE C—AM I-F coils must be aligned before attempting to align the FM I-F coils.

NOTE D—Connect zero center DC vacuum tube voltmeter as in Note A. Adjust input to give same output on the zero center DC vacuum tube voltmeter as in Note A.

© John F. Rider

Compliments of www.nucow.com

MODEL 94WG-1811A

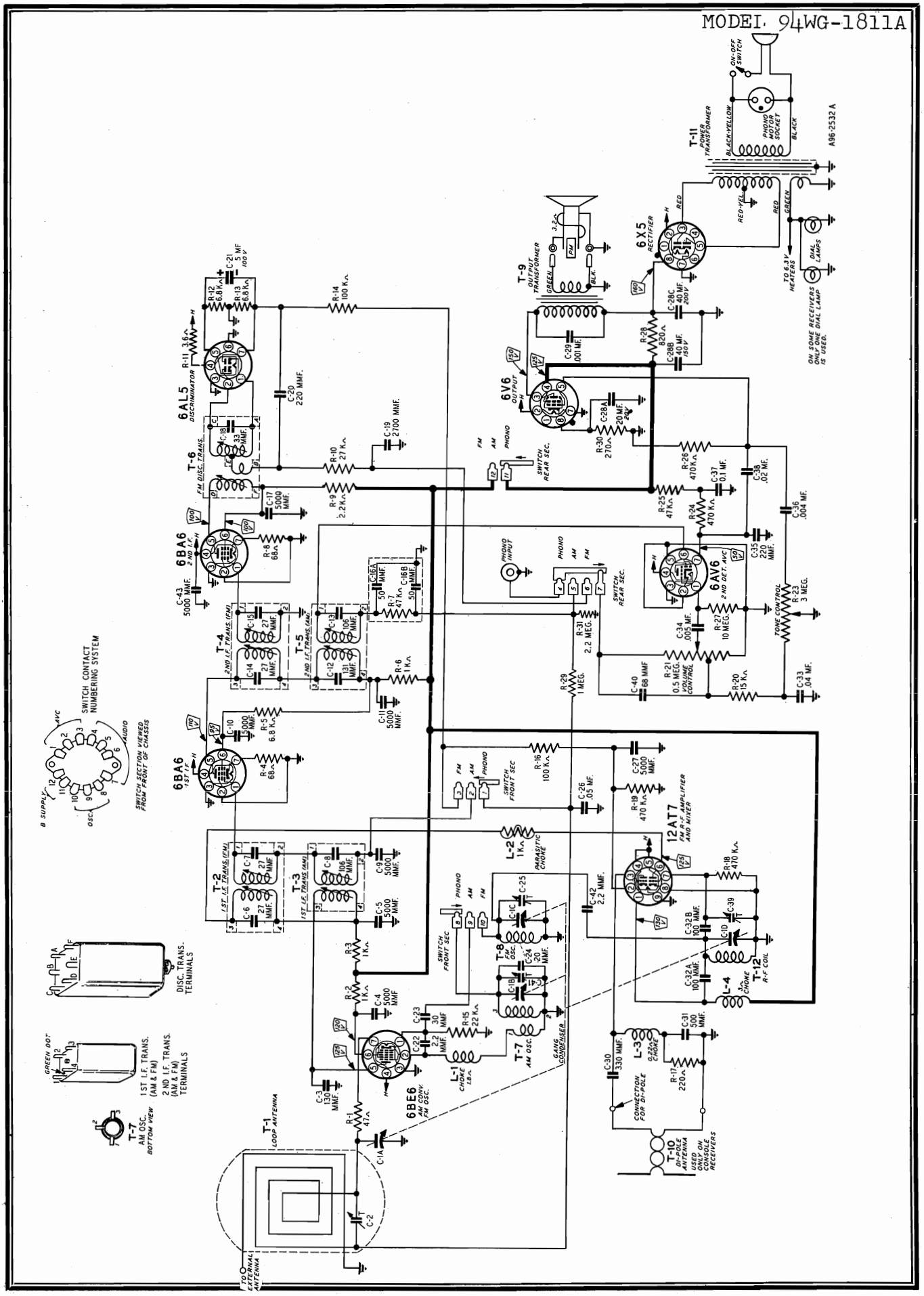

© John F. Rider

Compliments of www.nucow.com

MODEL 94WG-1811A

REPLACEMENT PARTS INFORMATION

CAPACITORS

Ref. No.	Part No.	Description	Qty. Used in Set
C-1	14A210	Gang Condenser Assembly	1
C-2	17A256	2-24 mmf Trimmer	1
C-3	47X559	130 mmf Ceramic	1
C-4, C-5, C-9, C-10, C-11, C-17, C-27, C-43	47X507	5000 mmf Ceramic	8
C-6, C-7		Part of T-2 (Ist I-F Trans. FM)	
C-8		Part of T-3 (Ist I-F Trans. AM)	
C-12, C-13		Part of T-5 (2nd I-F Trans. AM)	
C-14, C-15		Part of T-4 (2nd I-F Trans. FM)	
C-16A, C-16B	47X112	50-50 mmf Dual Mica	1
C-18		Part of T-6 (Discriminator Trans.)	
C-19	47X492	2700 mmf Molded Mica	1
C-20, C-35	47X468	220 mmf Ceramic	2
C-21	45X361	5 mf 100 V Dry Electrolytic	1
C-22, C-42	47X557	2.2 mmf Ceramic	2
C-23	47X558	30 mmf Ceramic	1
C-24	47X516	20 mmf Ceramic	1
C-25	17A255	1-8 mmf Trimmer	1
C-26	B66503	.05 mf 200 V Tubular	1
C-28A, C-28B, C-28C	45X360	20 mf 20 V, 40 mf 150 V, 40 mf 200 V Dry Electrolytic	1
C-29	H66102	.001 mf 800 V Tubular	1
C-30	47X470	330 mmf Molded Mica	1
C-31	47X508	500 mmf Ceramic	1
C-32A, C-32B	76X4	100 mmf Dual Ceramic	1
C-33	B66403	.04 mf 200 V Tubular	1
C-34	D66502	.005 mf 400 V Tubular	1
C-36	B66402	.004 mf 200 V Tubular	1
C-37	D66104	.1 mf 400 V Tubular	1
C-38	D66203	.02 mf 400 V Tubular	1
C-39, C-41		Part of C-1 (Gang Condenser)	
C-40	47X471	68 mmf Ceramic	1

RESISTORS

Ref. No.	Part No.	Ohms	Watts	Description	Qty. Used in Set
R-1	B85470	47	0.5	Carbon	1
R-2, R-3, R-6	B85102	1000	0.5	Carbon	3
R-4, R-8	B84680	68	0.5	Carbon	2
R-5, R-12, R-13	B84682	6800	0.5	Carbon	3
R-7, R-25	B85473	47 K	0.5	Carbon	2
R-9	B85222	2200	0.5	Carbon	1
R-10	B85273	27 K	0.5	Carbon	1
R-11	43X233	3.6	0.5	Wirewound	1
R-14, R-16	B85104	100 K	0.5	Carbon	2
R-15	B85223	22 K	0.5	Carbon	1
R-17	B84221	220	0.5	Carbon	1
R-18, R-19, R-24, R-26	B85474	470 K	0.5	Carbon	4
R-20	B85153	15 K	0.5	Carbon	1
R-21	36X385	.5 meg.		Volume Control & Switch	1
R-23	40X296	3 meg.		Tone Control	1
R-27	B85106	10 meg.	0.5	Carbon	1
R-28	D84821	820	2.0	Carbon	1
R-29	B85105	1 meg.	0.5	Carbon	1
R-30	B84271	270	0.5	Carbon	1
R-31	B85225	2.2 meg.	0.5	Carbon	1

TRANSFORMERS AND COILS

L-1	35A5	Insulated Choke	1
L-2	9A2068	Parasitic Choke Assembly	1
L-3	35A9	Insulated Choke	1
L-4	35A8	Insulated Choke	1
T-1	9A2079	"B" Range Loop Antenna	1
T-2	9A2060	1st I-F Trans. (FM)	1
T-3	9A2062	1st I-F Trans. (AM)	1
T-4	9A2061	2nd I-F Trans. (FM)	1
T-5	9A2063	2nd I-F Trans. (AM)	1
T-6	9A2064	Discriminator Transformer	1
T-7	9A2065	Oscillator Coil (AM)	1
T-8	9A2067	Oscillator Coil (FM)	1
T-9	51X144	Output Transformer	1
T-11	53X291	Power Transformer	1
T-12	9A2066	Antenna Coil (FM)	1

©John F. Rider

Compliments of www.nucow.com

MODEL 94WG-1811A

REPLACEMENT PARTS LIST (continued)

MISCELLANEOUS

Ref. No.	Part No.	Description	Qty. Used in Set
	12A498	6" P.M. Speaker	1
	3A303	Tube Socket—Octal (8 prong) Molded	2
	3A426	Tube Socket—Miniature	4
	3A427	Tube Socket (12AT7)	1
	3A443	Tube Socket (6BE6)	1
	3A304	Phono Motor Socket	1
	3A305	Phono Socket—Single Pin Tip	1
	2A394	Band Change Switch	1
	13X546	Line Cord and Plug Assembly	1
	10A750	Knob	4
	4X1071	Escutcheon	1

DIAL AND DRIVE ASSEMBLY

Ref. No.	Part No.	Description	Qty. Used in Set
	58X728	Dial Glass	1
	15X253	Pointer	1
	7A103	No. 47 Pilot Light Bulb	1
	7A226	Pilot Light Socket Assembly	1
	26X514	Drive Shaft	1
	28X113	Drive Cord Tension Spring	1
	10X74	Drive Cord Assembly	1
	19X192	"C" Washer (Mtg. Drive Shaft)	2
	28X292	Snap Button	4
	6X66	Rubber Grommet (Mtg. Gang Condenser)	3
	26X513	Pointer Shaft	1
	28X206	Pointer Cord Tension Spring	1
	25X1672	Pointer Bracket	1
	10X73	Pointer Cord Assembly	1

DRIVE CORD REPLACEMENTS

POINTER CORD

With the opening in the pointer shaft A in a horizontal position, insert looped end of cord through the opening and then one and one-half turns clockwise around pointer shaft A. Pass the cord around idler stud B and attach to tension spring at C. Then pass the remaining cord one turn counterclockwise and then down. Wind cord two complete turns counterclockwise around drive shaft D and then pass the cord through the slot and attach to tension spring at E.

DIAL CORD

Install the cord as shown in the illustration, winding three turns counterclockwise around the drive shaft with the turns progressing away from the chassis. After completing the installation rotate the drive shaft a few turns to take up the slack in the cord.

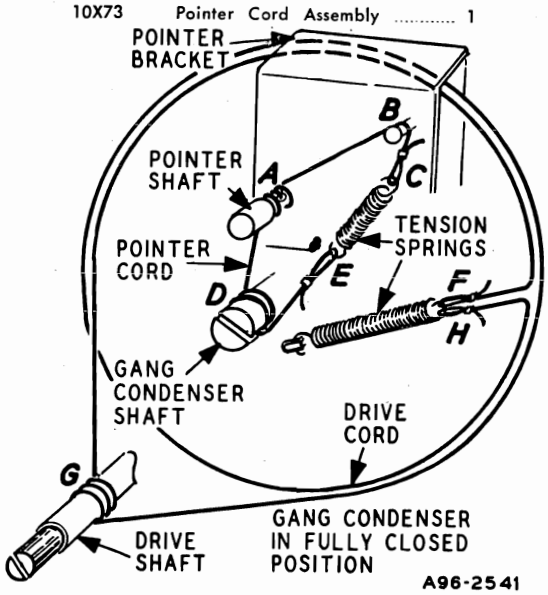

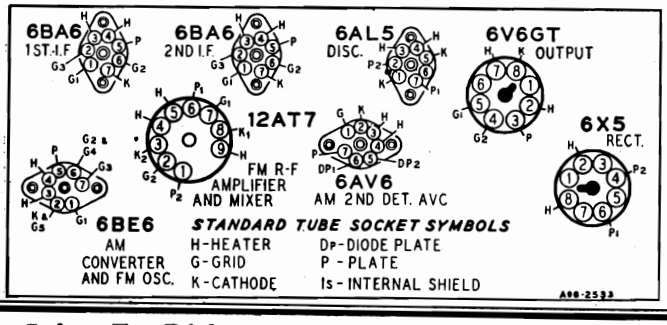

TUBE SOCKET VOLTAGES

Socket voltages are shown on the schematic diagram at the tube socket terminals. All voltages are between the socket terminal and chassis ground. Plate, screen and cathode voltages were taken with a 1000 ohm-per-volt meter with a 300 volt scale used for plate and screen voltages. Audio grid voltages were read with a vacuum tube volt-meter. Conditions of measurement are:

Line voltage.....117 Volts AC
Signal Input.....None

A variation of ±10% is usually permissible.

© John F. Rider

Compliments of www.nucow.com

MODEL 05WG-1811B

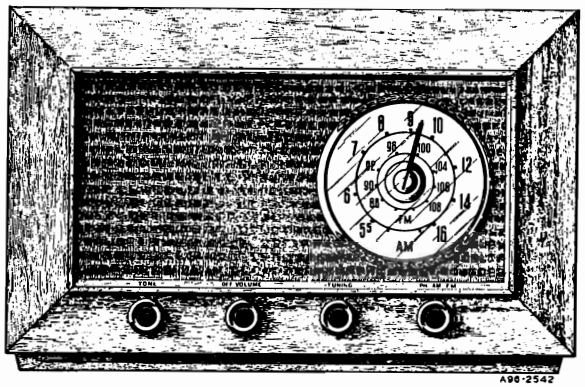

GENERAL DESCRIPTION

This is a two band, seven tube (plus rectifier tube) AM and FM receiver. Controls are provided at the front of the cabinet for tuning, volume, tone and band or phono selection. Phono input and phono motor sockets are provided at the rear of the receiver to which a record player may be connected. The I-F stages use high gain miniature type tubes. Air Wave Aerials are provided for the FM and Broadcast bands. Features include, a grounded grid R-F amplifier stage on the FM band, compensator circuits to prevent oscillator drift, automatic volume control, beam power output stage, PM dynamic loud speaker and an electrostatic shield in the power transformer to reduce power line noise.

ELECTRICAL SPECIFICATIONS

Power Supply	105-125 volts AC 50-60 cycles, 40 watts.
Frequency Ranges	Broadcast 540-1600 KC Frequency Modulation 88-108 MC
Intermediate Frequency	AM—455 KC FM—10.7 MC
Selectivity	AM—45 KC broad at 1000 times signal, measured at 1000 KC I.F. FM—200 KC broad at 2 times down I.F. FM—950 KC broad at 200 times down
AM Sensitivity	(For .5 watt output with external antenna) 25 microvolts average
FM Sensitivity	(For .5 watt output) 25 microvolts average
Power Output	1.9 watts maximum 0.8 watts 10% distortion
Loud Speaker	6" PM Dynamic
Voice Coil Impedance	3.2 ohms 400 cycles

Tube and Dial Lamp Complement

1 6BE6 AM Converter & FM Osc.
1 6BA6 1st I-F Amplifier
1 6BA6 2nd I-F Amplifier
1 6AL5 FM Discriminator
1 6AV6 Audio Amplifier, AM 2nd Detector and AVC
1 6V6GT Audio Output
1 6X5GT Rectifier
1 12AT7 R-F Amplifier & Mixer
1 No. 47 Dial Lamp

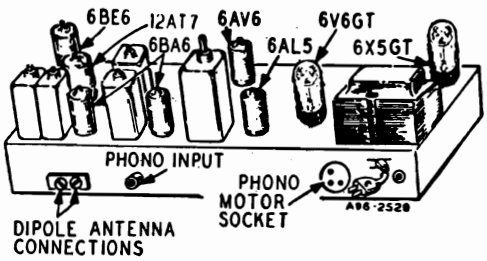

©John F. Rider

Compliments of www.nucow.com

MODEL 05WG-1811B

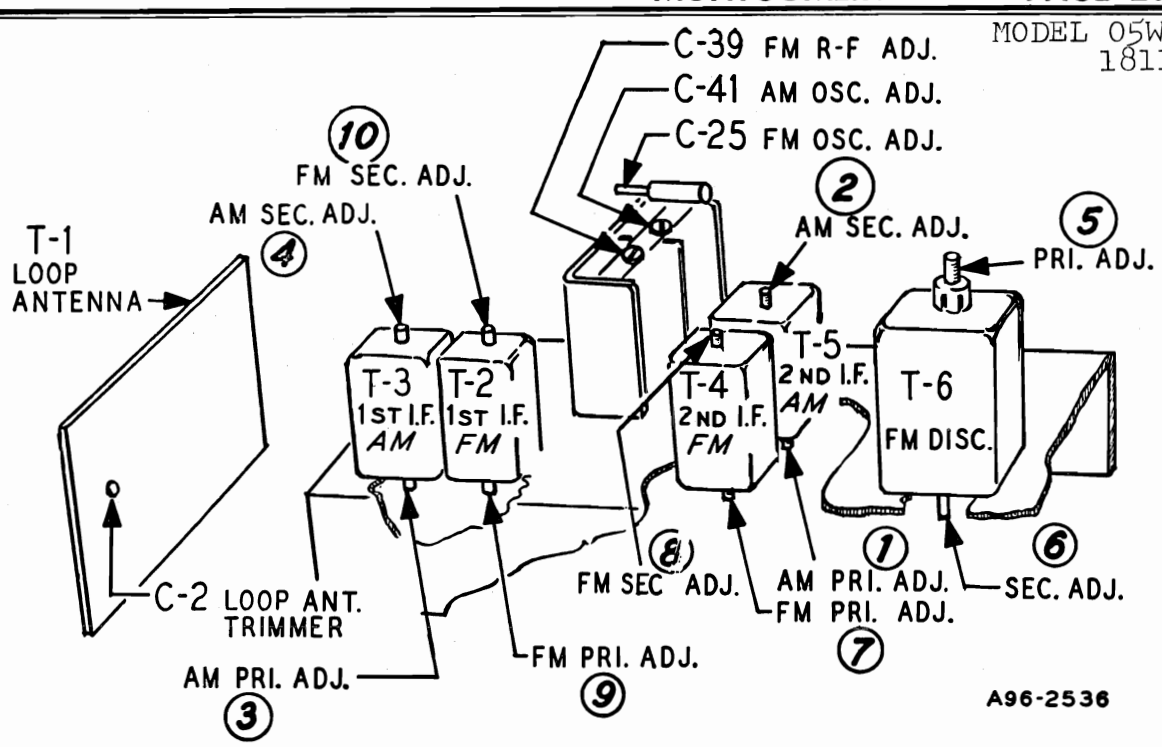

DRIVE CORD REPLACEMENTS

POINTER CORD

Install the cord as shown in the illustration making sure that the center turn of the three turns rests in the groove of the brass pointer pulley.

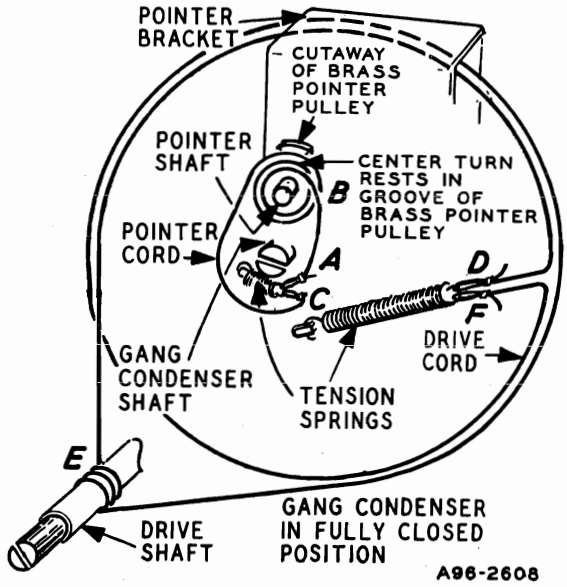

TUBE SOCKET VOLTAGES

Socket voltages are shown on the schematic diagram of the tube socket terminals. All voltages are between the socket terminal and chassis ground. Plate, screen and cathode voltages were taken with a 1000 ohm-per-volt meter with a 300 volt scale used for plate and screen voltages. Audio grid voltages were read with a vacuum tube volt-meter.

Conditions of measurement are:

Line voltage .....117 Volts AC
Signal Input .....None

A variation of ±10% is usually permissible.

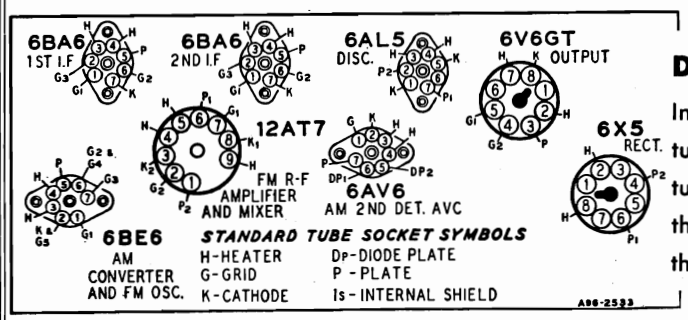

DIAL CORD

Install the cord as shown in the illustration, winding three turns counterclockwise around the drive shaft with the turns progressing away from the chassis. After completing the installation rotate the drive shaft a few turns to take up the slack in the cord.

©John F. Rider

Compliments of www.nucow.com

MODEL 05WG-1811B

ALIGNMENT PROCEDURES

AM STAGES

The following is required for aligning:
'An All Wave Signal Generator Which Will Provide an Accurately Calibrated Signal at the Test Frequencies as Listed.
Output Indicating Meter, Non-Metallic Screwdriver, Dummy Antennas — .1 mf, and 50mmf.

Volume Control Maximum all Adjustments.
Connect Radio Chassis to Ground Post of Signal Generator with a Short Heavy Lead.
Allow Chassis and Signal Generator to "Heat Up" for Several Minutes.

SIGNAL GENERATOR						
FREQUENCY SETTING	CONNECT GENERATOR OUTPUT TO	THROUGH DUMMY ANTENNA	CONNECT GROUND TO	GANG CONDENSER SETTING	ADJUST	ADJUST FOR
455 KC	Control Grid 1st 6BA6 Pin No. 1	.1 mf	Chassis Base	Rotor Fully Open	2nd I.F. Pri. (1) and Sec. (2)	Maximum Output
455 KC	Control Grid 6BE6 Pin No. 7 1st Det.	.1 mf	Chassis Base	Rotor Fully Open	1st I.F. Pri. (3) and Sec. (4)	Maximum Output
455 KC	Control Grid 6BE6 Pin No. 7	.1 mf	Chassis Base	Rotor Fully Open	2nd I.F. Pri. (1) and Sec. (2)	Maximum Output
1620 KC	Control Grid 6BE6 Pin No. 7	.1 mf	Chassis Base	Rotor Fully Open	Oscillator C-41	Maximum Output
1400 KC	External Antenna Terminal	50 mmf	Chassis Base	Turn Rotor to Max. Output. Set Pointer to 1400 KC See Note A	Antenna C-2	Maximum Output

NOTE A—If the pointer is not at 1400 KC on the dial, reset pointer to the 1400 KC mark on the dial scale.

FM STAGES

The following is required for aligning:
An accurately calibrated signal generator providing unmodulated signals at the test frequencies listed below.
Non-metallic screwdriver.
Dummy Antennas and I-F Loading Resistor—2500 mmf, 300 ohms

Zero center scale DC vacuum tube voltmeter having a range of approximately 3 volts.
(If a zero center scale meter is not available, a standard scale vacuum tube voltmeter may be used by reversing the meter connections for negative readings).
Allow chassis and signal generator to "Heat Up" for several minutes.

	SIGNAL GENERATOR						
	FREQUENCY SETTING	CONNECT GENERATOR OUTPUT TO	THROUGH DUMMY ANTENNA	BAND SWITCH SETTING	GANG CONDENSER SETTING	ADJUST	ADJUST FOR
Discriminator	10.7 MC	6BA6 2nd I-F Pin 1 and Chassis	2500 mmf	FM	Rotor Fully Open	Disc. Pri. (5) Note A	Maximum Deflection
	10.7 MC	6BA6 2nd I-F Pin 1 and Chassis	2500 mmf	FM	Rotor Fully Open	Disc. Sec. (6) Note B	
I-F	10.7 MC Note C	6BA6 1st I-F Pin 1 and Chassis	2500 mmf	FM	Rotor Fully Open	2nd I-F Pri. (7) Sec. (8) Note D	Maximum Deflection
Discriminator	10.7 MC	6BA6 1st I-F Pin 1 and Chassis	2500 mmf	FM	Rotor Fully Open	Disc. Pri. (5) Note D	Maximum Deflection
I-F	10.7 MC	Junction C-32A & B (Dual 100 mmf cond.) And chassis	2500 mmf	FM	Rotor Fully Open	1st I-F Pri. (9) & Sec. (10) 2nd I-F Pri. (7) & Sec. (8) Disc. Pri. (5) In Order Shown Note D	Maximum Deflection
	10.7 MC	Same as above	2500 mmf	FM	Rotor Fully Open	Disc. Sec. (6) Note B	
RECHECK I-F ADJUSTMENTS IN ORDER GIVEN							
Oscillator	108.5	Disconnect hank antenna and connect generator to dipole terminals with resistor in series.	300 ohms	FM	Rotor Fully Open	Osc. C-25	Maximum Deflection
Antenna	104.5	Same as above	300 ohms	FM	Tune rotor for max. AVC voltage	Ant. C-39	Maximum Deflection
RECHECK ANTENNA & OSC. ADJUSTMENTS IN ORDER GIVEN							

FM ALIGNMENT NOTES

NOTE A—The zero center scale DC vacuum tube voltmeter is to be connected between chassis ground and the AVC line. A signal of .1 volt must be fed into the receiver for this adjustment.
Note output voltage on the zero center DC vacuum tube voltmeter.

NOTE B—Disconnect zero center DC vacuum tube voltmeter from AVC and connect it at the audio takeoff point at the 27 K ohm resistor (R-10) and its junction with the terminal strip. Adjust for zero voltage indication.

NOTE C—AM I-F coils must be aligned before attempting to align the FM I-F coils.

NOTE D—Connect zero center DC vacuum tube voltmeter as in Note A. Adjust input to give same output on the zero center DC vacuum tube voltmeter as in Note A.

©John F. Rider

Compliments of www.nucow.com

MODEL 05WG-1811B

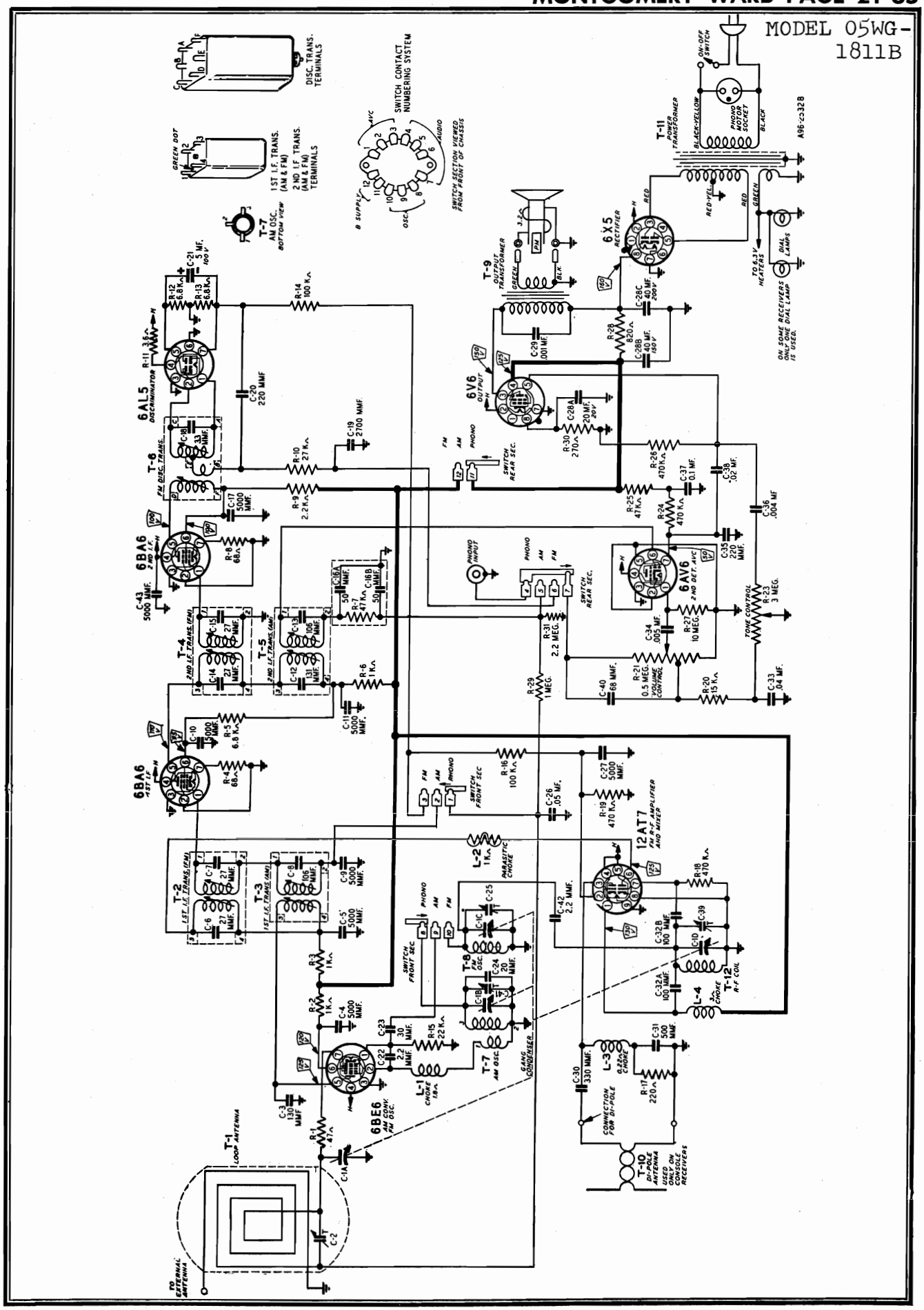

©John F. Rider

Compliments of www.nucow.com

MODEL 05WG-1811B

REPLACEMENT PARTS INFORMATION

HOW TO ORDER PARTS—Should it be necessary to write us or to order any repair parts, it is important that the complete model number which appears on the label attached to the rear of the chassis be specified.

Ref. No.	Part No.	Description	Qty. Used in Set
		CAPACITORS	
C-1	14A214	Gang Condenser Assembly	1
C-2	17A256	2-24 mmf Trimmer	1
C-3	47X559	130 mmf Ceramic	1
C-4, C-5, C-9, C-10, C-11, C-17, C-27, C-43	47X507	5000 mmf Ceramic	8
C-6, C-7		Part of T-2 (1st I-F Trans. FM)	
C-8		Part of T-3 (1st I-F Trans. AM)	
C-12, C-13		Part of T-5 (2nd I-F Trans. AM)	
C-14, C-15		Part of T-4 (2nd I-F Trans. FM)	
C-16A, C-16B	47X112	50-50 mmf Dual Mica	1
C-18		Part of T-6 (Discriminator Trans.)	
C-19	47X492	2700 mmf Molded Mica	1
C-20, C-35	47X468	220 mmf Ceramic	2
C-21	45X361	5 mf 100 V Dry Electrolytic	1
C-22, C-42	47X557	2.2 mmf Ceramic	2
C-23	47X558	30 mmf Ceramic	1
C-24	47X516	20 mmf Ceramic	1
C-25	17A255	1-8 mmf Trimmer	1
C-26	B66503	.05 mf 200 V Tubular	1
C-28A, C-28B, C-28C	45X360	20 mf 20 V; 40 mf 150 V; 40 mf 200 V Dry Electrolytic	1
C-29	H66102	.001 mf 800 V Tubular	1
C-30	47X470	330 mmf Molded Mica	1
C-31	47X508	500 mmf Ceramic	1
C-32A, C-32B	76X4	100 mmf Dual Ceramic	1
C-33	B66403	.04 mf 200 V Tubular	1
C-34	D66502	.005 mf 400 V Tubular	1
C-36	B66402	.004 mf 200 V Tubular	1
C-37	D66104	.1 mf 400 V Tubular	1
C-38	D66203	.02 mf 400 V Tubular	1
C-39, C-41		Part of C-1 (Gang Condenser)	
C-40	47X471	68 mmf Ceramic	1
		RESISTORS (Ohms / Watts)	
R-1	B85470	47 / 0.5 Carbon	1
R-2, R-3, R-6	B85102	1000 / 0.5 Carbon	3
R-4, R-8	B84680	68 / 0.5 Carbon	2
R-5, R-12, R-13	B84682	6800 / 0.5 Carbon	3
R-7, R-25	B85473	47 K / 0.5 Carbon	2
R-9	B85222	2200 / 0.5 Carbon	1
R-10	B85273	27 K / 0.5 Carbon	1
R-11	43X233	3.6 / 0.5 Wirewound	1
R-14, R-16	B85104	100 K / 0.5 Carbon	2
R-15	B85223	22 K / 0.5 Carbon	1
R-17	B84221	220 / 0.5 Carbon	1
R-18, R-19, R-24, R-26	B85474	470 K / 0.5 Carbon	4
R-20	B85153	15 K / 0.5 Carbon	1
R-21	36X385	.5 meg. Volume Control & Switch	1
R-23	40X296	3 meg. Tone Control	1
R-27	B85106	10 meg. / 0.5 Carbon	1
R-28	D84821	820 / 2.0 Carbon	1
R-29	B85105	1 meg. / 0.5 Carbon	1
R-30	B84271	270 / 0.5 Carbon	1
R-31	B85225	2.2 meg. / 0.5 Carbon	1
		TRANSFORMERS AND COILS	
L-1	35A5	Insulated Choke	1
L-2	9A2103	Parasitic Choke Assembly	1
L-3	35A9	Insulated Choke	1
L-4	35A8	Insulated Choke	1
T-1	9A2079	"B" Range Loop Antenna	1
T-2	9A2060	1st I-F Trans. (FM)	1
T-3	9A2062	1st I-F Trans. (AM)	1
T-4	9A2061	2nd I-F Trans. (FM)	1
T-5	9A2063	2nd I-F Trans. (AM)	1
T-6	9A2064	Discriminator Transformer	1
T-7	9A2065	Oscillator Coil (AM)	1
T-8	9A2067	Oscillator Coil (FM)	1
T-9	51X144	Output Transformer	1
T-11	53X291	Power Transformer	1
T-12	9A2066	Antenna Coil (FM)	1
		MISCELLANEOUS	
	12A498	6" P.M. Speaker	1
	3A435	Tube Socket—Octal (8 prong) Molded	2
	3A426	Tube Socket (1st 6BA6)	1
	3A427	Tube Socket (6BE6)	1
	3A443	Tube Socket (12AT7)	1
	3A439	Tube Socket (Miniature)	3
	3A304	Phono Motor Socket	1
	3A305	Phono Socket—Single Pin Tip	1
	2A394	Band Change Switch	1
	13X546	Line Cord and Plug Assembly	1
	4X1071	Escutcheon	1
	10A757	Knob	4
		DIAL AND DRIVE ASSEMBLY	
	58X728	Dial Glass	1
	15X253	Pointer	1
	7A103	No. 47 Pilot Light Bulb	1
	7A226	Pilot Light Socket Assembly	1
	26X514	Drive Shaft	1
	28X113	Drive Cord Tension Spring	1
	10X74	Drive Cord Assembly	1
	19X192	"C" Washer (Mtg. Drive Shaft)	2
	28X292	Snap Button	4
	6X66	Rubber Grommet (Mtg. Gang Condenser)	3
	25A1079	Pointer Shaft & Pulley Assembly	1
	28X524	Pointer Cord Tension Spring	1
	25X1672	Pointer Bracket	1
	10X76	Pointer Cord Assembly	1

©John F. Rider

Compliments of www.nucow.com

MODEL 05WG-2745B

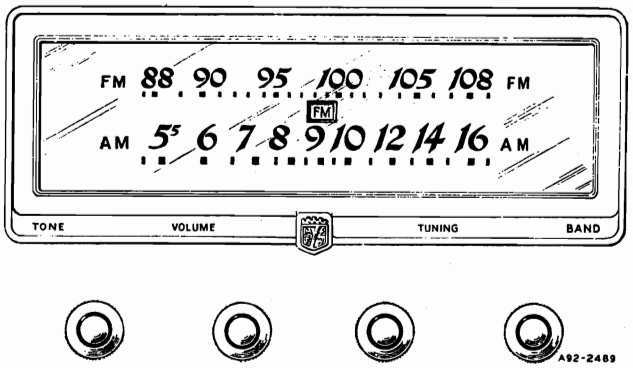

GENERAL DESCRIPTION

This is a two band, nine tube (plus rectifier tube) AM and FM receiver with automatic record changer. The I-F stages use high gain miniature type tubes. Built-in Air Wave Aerials are provided for the FM and Broadcast bands. Features include, compensator circuits to prevent oscillator drift, automatic volume control, push-pull pentode power output stage, PM dynamic loud speaker and an electrostatic shield in the power transformer to reduce power line noise.

The receiver and record changer are housed in a console combination cabinet with controls provided for tuning, volume, tone and band or phono selection.

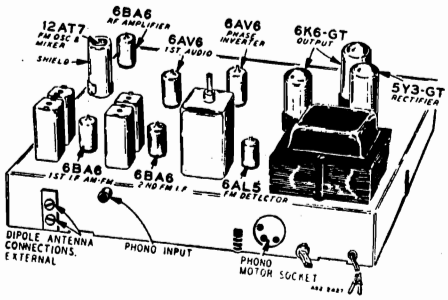

DRIVE CORD REPLACEMENT

Use a new 10X54 drive cord assembly or a new length of cord 48 inches long for the installation, winding three turns clockwise around the drive shaft with the turns progressing away from the chassis. After completing the installation, rotate the drive shaft a few turns to take up the slack in the cord.

ELECTRICAL SPECIFICATIONS

Power Supply	105-125 volts AC 60 cycles, 80 watts, 100 watts with record changer
Frequency Ranges	Broadcast 540-1600 KC Frequency Modulation 88-108 MC
Intermediate Frequency	AM—455 KC FM—10.7 MC
Selectivity	AM—43 KC broad at 1000 times signal, measured at 1000 KC I.F. FM—200 KC broad at 2 times down I.F. FM—760 KC broad at 200 times down
AM Sensitivity	(For .5 watt output with external antenna) 10 microvolts average
FM Sensitivity	(For .5 watt output) 30 microvolts average
Power Output	8.5 watts maximum 6.0 watts 10% distortion
Loud Speaker	12" PM Dynamic
Voice Coil Impedance	3.2 ohms 400 cycles
Record Changer	See Manual No. 5096A

Tube and Dial Lamp Complement

- 1 6BA6 AM-FM R-F Amplifier
- 1 12AT7 FM & AM Osc. & Mixer
- 1 6BA6 FM-AM 1st I-F Amplifier
- 1 6BA6 FM 2nd I-F Amplifier
- 1 6AL5 FM Detector
- 1 6AV6 Audio Amplifier, AM 2nd Detector and AVC
- 2 6K6-GT Audio Output
- 1 5Y3-GT Rectifier
- 1 6AV6 Phase Inverter
- 2 No. 47 Dial Lamps

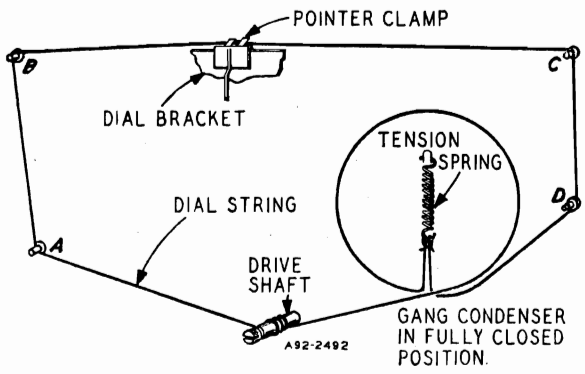

©John F. Rider

Compliments of www.nucow.com

MODEL 05WG-2745B

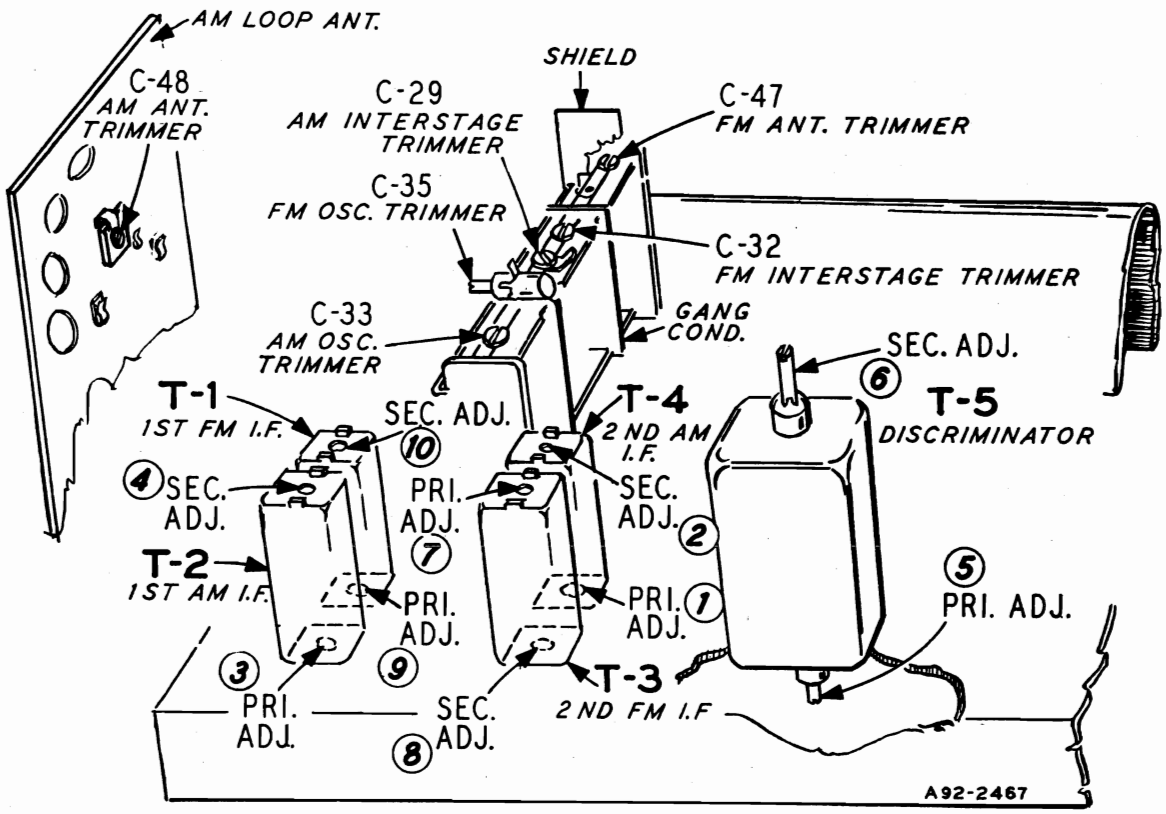

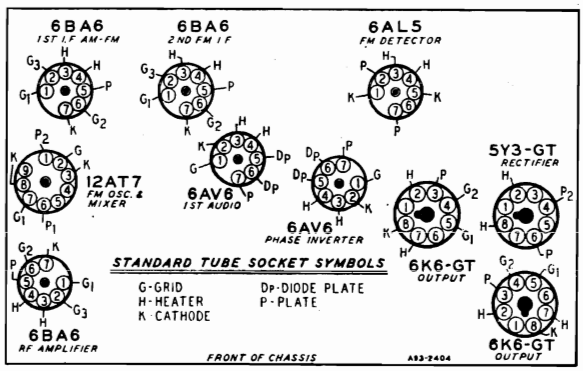

TUBE SOCKET VOLTAGES

Socket voltages are shown on the Schematic diagram at the tube socket terminals. All voltages are between the socket terminal and chassis ground. Plate, screen and cathode voltages were taken with a 1000 ohm-per-volt meter with a 300 volt scale used for plate and screen voltages. Audio grid voltages were read with a vacuum tube volt-meter. Conditions of measurement are:

Line voltage .....117 Volts AC
Signal Input .....None
A variation of ±10% is usually permissible.

ALIGNMENT PROCEDURE

AM STAGES

The following is required for aligning:
An All Wave Signal Generator Which Will Provide an Accurately Calibrated Signal at the Test Frequencies as Listed.
Output Indicating Meter, Non-Metallic Screwdriver, Dummy Antennas —.1 mf, 200 mmf.

Volume Control—Maximum all Adjustments
Connect Radio Chassis to Ground Post of Signal Generator with a Short Heavy Lead.
Allow Chassis and Signal Generator to "Heat Up" for Several Minutes.

SIGNAL GENERATOR	FREQUENCY SETTING	CONNECT GENERATOR OUTPUT TO	THROUGH DUMMY ANTENNA	BAND SWITCH SETTING	GANG CONDENSER SETTING	ADJUST	ADJUST FOR
I-F	455 kc	12AT7 Pin 7 and Chassis	.1 mf	Broadcast	Rotor Fully Open	2nd I-F Pri. & Sec. (1) & (2) 1st I-F Pri. & Sec. (3) & (4)	Maximum Output
Broadcast	1620 kc	External ant. lead	200 mmf	Broadcast	Rotor Fully Open	Broadcast Oscillator C-33	
	1400 kc	External ant. lead	200 mmf	Broadcast	Turn Rotor to Max. Output	Broadcast Interstage C-29	
	1400 kc	External ant. lead	200 mmf	Broadcast	Set pointer to 1400 kc See Note A	Loop Antenna C-48	

Note A—If the pointer is not at 1400 KC on dial, reset pointer at the 1400 KC mark on the dial scale.

©John F. Rider

Compliments of www.nucow.com

MODEL 05WG-2745B

FM STAGES

The following equipment is required for aligning:

An accurately calibrated signal generator providing unmodulated signals at the test frequencies listed below.

Non-metallic screwdriver.

Dummy Antennas and I-F Loading Resistor—.01 mf, 300 ohms and 1000 ohms.

Zero center scale DC vacuum tube voltmeter having a range of approximately 3 volts.

(If a zero center scale meter is not available, a standard scale vacuum tube voltmeter may be used by reversing the meter connections for negative readings.)

Allow chassis and signal generator to warm up for several minutes.

	SIGNAL GENERATOR						
	FREQUENCY SETTING	CONNECT GENERATOR OUTPUT TO	THROUGH DUMMY ANTENNA	BAND SWITCH SETTING	GANG CONDENSER SETTING	ADJUST	ADJUST FOR
Discriminator	10.7 MC Note B	6BA6 2nd I-F Pin 1 and Chassis	.01 mf	FM	Rotor Fully Open	Disc. Pri. (5) Note A	Maximum Deflection
	10.7 MC Note B	6BA6 2nd I-F Pin 1 and Chassis	.01 mf	FM	Rotor Fully Open	Disc. Sec. (6) Note C	Zero Center
I-F	10.7 MC Note F	6BA6 1st I-F Pin 1 and Chassis	.01 mf	FM	Rotor Fully Open	2nd I-F Pri. Note A and D (7) 2nd I-F Sec. Note A and E (8)	Maximum Deflection
Discriminator	10.7 MC Note F	6BA6 1st I-F Pin 1 and Chassis	.01 mf	FM	Rotor Fully Open	Disc. Pri. (5) Note A	Maximum Deflection
	10.7 MC Note F	6BA6 1st I-F Pin 1 and Chassis	.01 mf	FM	Rotor Fully Open	Disc. Sec. (6) Note C	Zero Center
	10.7 MC Note F	FM-RF Gang Condenser terminal	.01 mf	FM	Rotor Fully Open	1st I-F Pri. (9) 1st I-F Sec. (10) Notes A, D & E	Maximum Deflection
Recheck I-F Adjustments in order given							
R-F & Osc.	108.4 Note H	Disconnect dipole and connect generator to dipole terminals with resistor in series	300 ohms	FM	Rotor Fully Open	Oscillator C-35 Note G	Maximum Deflection
	104.5	Disconnect dipole and connect generator to dipole terminals with resistor in series	300 ohms	FM	Tune Rotor for Max. AVC voltage	FM Interstage C-32	Maximum Deflection
	104.5	Disconnect dipole and connect generator to dipole terminals with resistor in series	300 ohms	FM	Tune Rotor for Max. AVC voltage	Ant. C-47	Maximum Deflection
Recheck R-F and Osc. Adjustments in order given							

NOTE A—Test Equipment connections are as given in the table. The zero center scale DC vacuum tube voltmeter is to be connected between chassis ground and the AVC line at the junction of resistor R-22 and condenser C-18 for all adjustments except the discriminator secondary adjustment, for which See Note C.

NOTE B—A signal of .1 volt must be fed into the receiver for this adjustment.

NOTE C—Disconnect zero center DC vacuum tube voltmeter from AVC and connect to junction of R-18 and C-62. Adjust for zero voltage indication.

NOTE D—Before adjusting Pri. core connect 1000 ohm load resistor across the 2nd I.F. secondary terminals. Input may have to be increased to .1 volt if receiver is *badly* mis-aligned.

NOTE E—Disconnect 1000 ohm load resistor from secondary terminals and connect across the 2nd I.F. primary terminals. Input may have to be increased to .1 volt if receiver is *badly* mis-aligned.

NOTE F—Input can be reduced to 10,000 microvolts.

NOTE G—Oscillator frequency above signal frequency.

NOTE H—Remove the 1000 ohm load resistor before attempting to check the R-F and oscillator adjustments.

REPLACEMENT PARTS INFORMATION

HOW TO ORDER PARTS — Should it be necessary to write us or to order any repair parts, it is important that the complete model number which appears on the label attached to the rear of the chassis be specified.

REPLACEMENT PARTS LIST

Ref. No.	Part No.	Description	Qty. Used in Set
C-48	Part of T-7 (Loop Antenna)		
C-50A, C-50B, C-50C	45X374	40 mf 450 V; 40 mf 450 V; 40 mf 25 V; Dry Electrolytic	1
C-52	F66103	.01 mf 600 V Tubular.....	1
C-53	47X468	220 mmf Ceramic.....	1
C-54, C-59	F66203	.02 mf 600 V Tubular.....	2
C-55, C-60	F66102	.001 mf 600 V Tubular.....	2
C-56	B66203	.02 mf 200 V Tubular.....	1
C-57	F66602	.006 mf 600 V Tubular.....	1
C-58	B66502	.005 mf 200 V Tubular.....	1
C-61	47X471	68 mmf Ceramic.....	1
C-62	47X492	2700 mmf Molded Mica..	1
C-63	46X328	.01 mf 120 V Tubular.....	1

©John F. Rider

Compliments of www.nucow.com

MODEL 05WG-2745B

CAPACITORS

Ref. No.	Part No.	Description	Qty. Used in Set
C-1	14A207	Gang Condenser	1
C-2, C-3, C-7, C-9, C-12, C-16, C-17, C-18, C-19, C-27, C-42	47X507	5000 mmf Ceramic	11
C-4	47X497	100 mmf Ceramic	1
C-5	47X499	47 mmf Ceramic	1
C-8	47X498	47 mmf Ceramic	1
C-10, C-65	Part of T-1 1st I-F (FM)		
C-11, C-28	47X550	100 mmf Ceramic	2
C-15	Part of T-3 2nd I-F (FM)		
C-21	Part of T-5 Discriminator		
C-22, C-24, C-31, C-51	47X501	68 mmf Ceramic	4
C-23	45X361	5 mf 100 V Dry Electrolytic	1
C-25, C-26, C-45	47X496	500 mmf Ceramic	3
C-29, C-32, C-33, C-47	Part of Gang Condenser		
C-30	47X552	15 mmf Ceramic	1
C-34, C-46	47X516	20 mmf Ceramic	2
C-35	26A489	1-8 mmf Trimmer	1
C-36, C-64	47X549	5 mmf Ceramic	2
C-37, C-65	F66403	.04 mf 600 V Tubular	2
C-38, C-39	Part of T-2 1st I-F (AM)		
C-40	B66503	.05 mf 200 V Tubular	1
C-41, C-43	Part of T-4 2nd I-F (AM)		
C-44A, C-44B	47X112	50-50 mmf Dual Mica	1

RESISTORS

Ref. No.	Part No.	Ohms	Watts	Description	Qty. Used in Set
R-1, R-10, R-22	B85105	1 meg.	0.5	Carbon	3
R-2, R-12, R-15	B83680	68	0.5	Carbon	3
R-3, R-11	B84563	56K	0.5	Carbon	2
R-4, R-6, R-8, R-13	B84102	1000	0.5	Carbon	4
R-5	B85104	100K	0.5	Carbon	1
R-7	B84103	10K	0.5	Carbon	1
R-9	B85225	2.2 meg.	0.5	Carbon	1
R-14	B85473	47K	0.5	Carbon	1
R-16	C84393	39K	1.0	Carbon	1
R-17	B85222	2200	0.5	Carbon	1
R-18	B84273	27K	0.5	Carbon	1
R-19	43X233	3.6	0.5	Wire wound	1
R-20, R-21	B83682	6800	0.5	Carbon	2
R-23	43X242	1400	5.0	Wire wound	1
R-24, R-31, R-35, R-38	B85474	470K	0.5	Carbon	4
R-25	36X383	0.5 meg.		Volume Control	1
R-26	B85153	15K	0.5	Carbon	1
R-27	40X285	3 meg.		Tone Control	1
R-28, R-33	B85106	10 meg.	0.5	Carbon	2
R-29, R-34	B85274	270K	0.5	Carbon	2
R-30	D83561	560	2.0	Carbon	1
R-32	B84822	8200	0.5	Carbon	1
R-36	B84682	6800	0.5	Carbon	1
R-37	B84562	5600	0.5	Carbon	1

TRANSFORMERS AND COILS

Ref. No.	Part No.	Description	Qty. Used in Set
L-2	9A2025	Interstage Coil (AM)	1
L-3	9A2024	Interstage Coil (FM)	1
L-4	9A2022	Oscillator Coil (AM)	1
L-5	35A5	Insulated Choke	1
L-6	9A1881	Filament Choke	1
L-7	9A2023	Oscillator Coil (FM)	1
L-8	35A7	Mixer Choke (FM)	1
L-9	9A2027	Antenna Coil (FM)	1
T-1	9A2043	1st I-F Trans. (FM)	1
T-2	9A2029	1st I-F Trans. (AM)	1
T-3	9A2030	2nd I-F Trans. (FM)	1
T-4	9A2042	2nd I-F Trans. (AM)	1
T-5	9A1970	Discriminator Coil	1
T-6	9A2004	Dipole Antenna	1
T-7	9A2041	"B" Range Loop Antenna	1
T-8	53X286	Power Transformer	1
T-9	51X142	Output Transformer	1

DIAL AND DRIVE ASSEMBLY

Part No.	Description	Qty. Used in Set
58X723	Dial Glass	1
25X1634	Dial Bracket	1
41X87	Dial Light Reflector	2

MISCELLANEOUS

Part No.	Description	Qty. Used in Set
12A490	Speaker 12" P.M.	1
3A304	Phono Motor Socket	1
3A305	Phono Socket—Single Pin Tip	1
3A435	Tube Socket—Octal (8 prong) Molded	3
15X246	Pointer	1
10X54	Drive Cord Assembly	1
28X113	Drive Cord Spring	1
7A103	No. 47 Pilot Light	2
7A199	Pilot Light Socket Assembly	1
19X192	"C" Washer (mtg. Drive Shaft)	2
26X512	Drive Shaft	1
6X67	Rubber Grommet	4

©John F. Rider

Compliments of www.nucow.com

MODEL 05WG-2745B

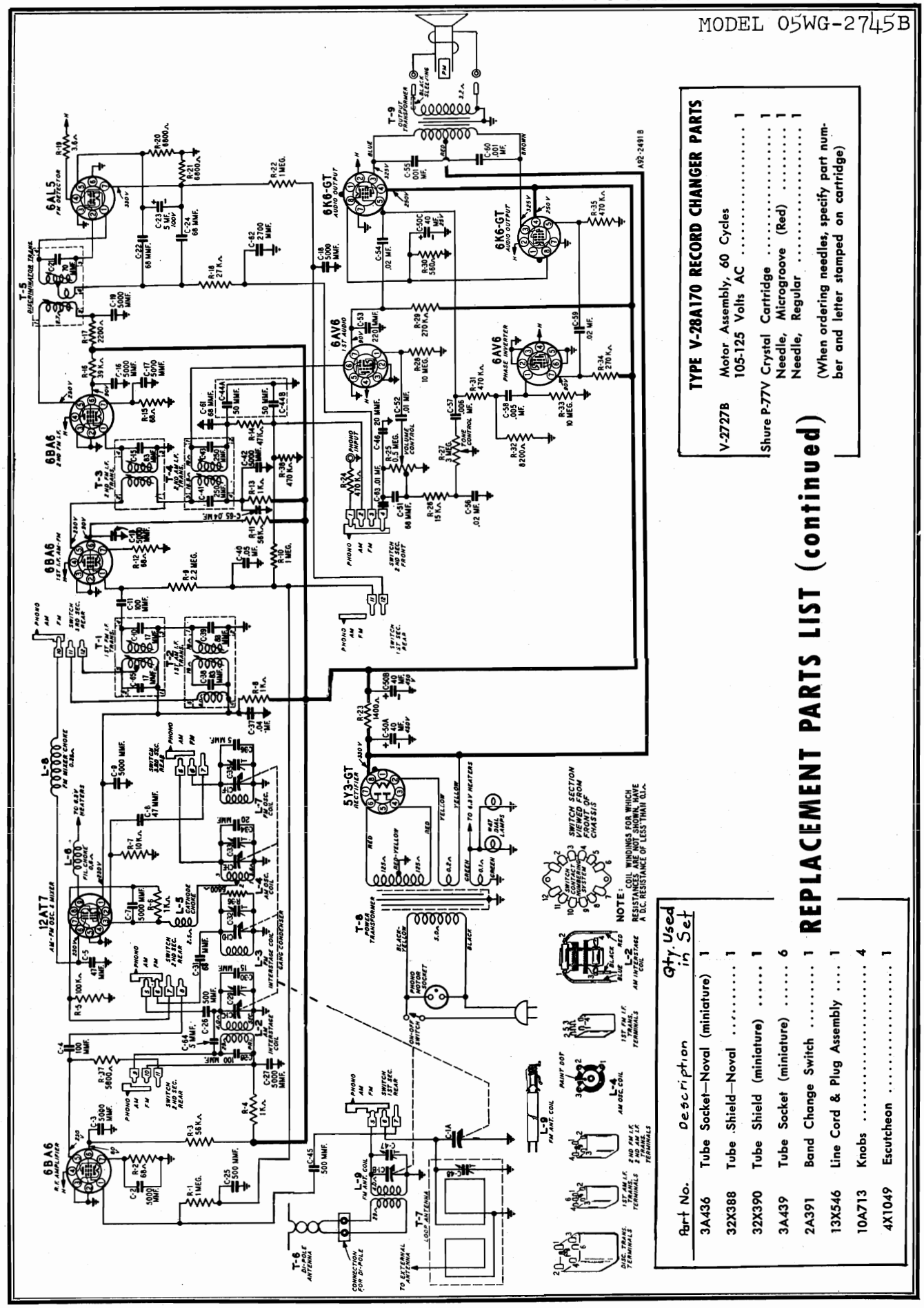

TYPE V-28A170 RECORD CHANGER PARTS

V-2727B	Motor Assembly, 60 Cycles 105-125 Volts AC	1
Shure P-77V Crystal Cartridge		1
	Needle, Microgroove (Red)	1
	Needle, Regular	1

(When ordering needles, specify part number and letter stamped on cartridge)

REPLACEMENT PARTS LIST (continued)

Part No.	Description	Qty. Used in Set
3A436	Tube Socket—Noval (miniature)	1
32X388	Tube Shield—Noval	1
32X390	Tube Shield (miniature)	1
3A439	Tube Socket (miniature)	6
2A391	Band Change Switch	1
13X546	Line Cord & Plug Assembly	1
10A713	Knobs	4
4X1049	Escutcheon	1

©John F. Rider

Compliments of www.nucow.com

MODEL 05WG-2747B

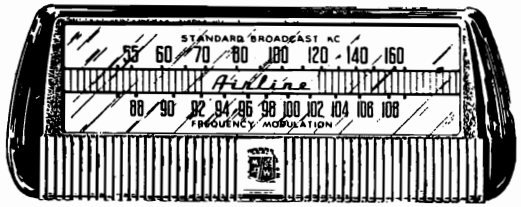

A85-2329

GENERAL DESCRIPTION

This is a two band, seven tube (plus rectifier tube) AM and FM receiver with automatic record changer. The I-F stages use high gain miniature type tubes. Built-in Air Wave Aerials are provided for the FM and Broadcast bands. Features include, a grounded grid R-F amplifier stage on the FM band, compensator circuits to prevent oscillator drift, automatic volume control, beam power output stage, PM dynamic loud speaker and an electrostatic shield in the power transformer to reduce power line noise.

The receiver and record changer are housed in a console combination cabinet with controls provided for tuning, volume, tone and band or phono selection.

ELECTRICAL SPECIFICATIONS

Power Supply..... 105-125 volts AC 60 cycles, 40 watts. 60 watts with record changer.

Frequency Ranges..... Broadcast 540-1600 KC
Frequency Modulation 88-108 MC

Intermediate Frequency... AM—455KC
FM—10.7 MC

Selectivity..... AM—45 KC broad at 1000 times signal, measured at 1000 KC
I.F. FM—200 KC broad at 2 times down
I.F. FM—950 KC broad at 200 times down

AM Sensitivity..... (For .5 watt output with external antenna) 25 microvolts average

FM Sensitivity..... (For .5 watt output) 25 microvolts average

Power Output..... 1.9 watts maximum
.8 watts 10% distortion

Loud Speaker..... 8" PM Dynamic

Voice Coil Impedance..... 3.2 ohms 400 cycles

Record Changer ..... See Manual No. 5081A.

Tube and Dial Lamp Complement
1 6BE6 AM Converter & FM Osc.
1 6BA6 1st I-F Amplifier
1 6BA6 2nd I-F Amplifier
1 6AL5 FM Discriminator
1 6AV6 Audio Amplifier, AM 2nd Detector and AVC
1 6V6GT Audio Output
1 6X5GT Rectifier
1 12AT7 R-F Amplifier & Mixer
2 No. 47 Dial Lamps

TUBE SOCKET VOLTAGES

Socket voltages are shown on the schematic diagram at the tube socket terminals. All voltages are between the socket terminal and chassis ground. Plate, screen and cathode voltages were taken with a 1000 ohm-per-volt meter with a 300 volt scale used for plate and screen voltages. Audio grid voltages were read with a vacuum tube volt-meter.

Conditions of measurement are:

Line voltage..... 117 Volts AC
Signal Input..... None

A variation of ±10% is usually permissible.

DRIVE CORD REPLACEMENT

DIAL POINTER CORD

Use a new 10X56 drive cord assembly or a new length of cord 46 inches long for the installation. Install the cord as shown in the illustration, winding three turns clockwise around the drive shaft with the turns progressing away from the chassis. After completing the installation rotate the drive shaft a few turns to take up the slack in the cord.

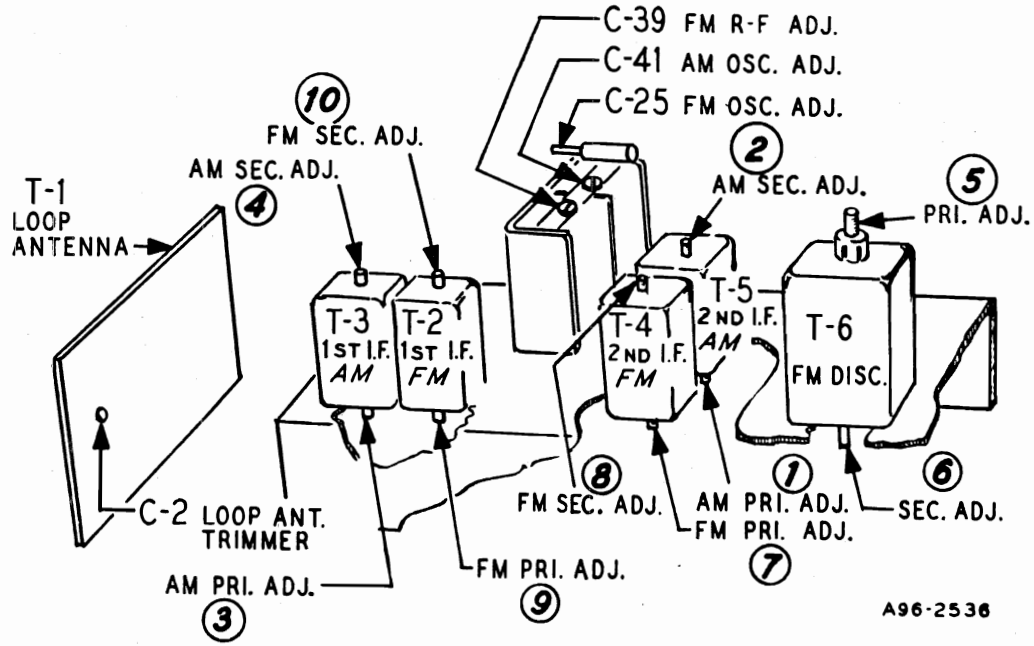

©John F. Rider

Compliments of www.nucow.com

MODEL 05WG-2747B

ALIGNMENT PROCEDURES

AM STAGES

The following is required for aligning:
An All Wave Signal Generator Which Will Provide an Accurately Calibrated Signal at the Test Frequencies as Listed.
Output Indicating Meter, Non-Metallic Screwdriver, Dummy Antennas — .1 mf, and 50mmf.

Volume Control Maximum all Adjustments.
Connect Radio Chassis to Ground Post of Signal Generator with a Short Heavy Lead.
Allow Chassis and Signal Generator to "Heat Up" for Several Minutes.

SIGNAL GENERATOR						
FREQUENCY SETTING	CONNECT GENERATOR OUTPUT TO	THROUGH DUMMY ANTENNA	CONNECT GROUND TO	GANG CONDENSER SETTING	ADJUST	ADJUST FOR
455 KC	Control Grid 1st 6BA6 Pin No. 1	.1 mf	Chassis Base	Rotor Fully Open	2nd I.F. Pri. (1) and Sec. (2)	Maximum Output
455 KC	Control Grid 6BE6 Pin No. 7 1st Det.	.1 mf	Chassis Base	Rotor Fully Open	1st I.F. Pri. (3) and Sec. (4)	Maximum Output
455 KC	Control Grid 6BE6 Pin No. 7	.1 mf	Chassis Base	Rotor Fully Open	2nd I-F Pri. (1) and Sec. (2)	Maximum Output
1620 KC	Control Grid 6BE6 Pin No. 7	.1 mf	Chassis Base	Rotor Fully Open	Oscillator C-41	Maximum Output
1400 KC	External Antenna Lead	50 mmf	Chassis Base	Turn Rotor to Max. Output. Set Pointer to 1400 KC See Note A	Antenna C-2	Maximum Output

NOTE A—If the pointer is not at 1400 KC on the dial, reset pointer to the 1400 KC mark on the dial scale.

FM STAGES

The following is required for aligning:
An accurately calibrated signal generator providing unmodulated signals at the test frequencies listed below.
Non-metallic screwdriver.
Dummy Antennas and I-F Loading Resistor—2500 mmf, 300 ohms

Zero center scale DC vacuum tube voltmeter having a range of approximately 3 volts.
(If a zero center scale meter is not available, a standard scale vacuum tube voltmeter may be used by reversing the meter connections for negative readings).
Allow chassis and signal generator to "Heat Up" for several minutes.

	SIGNAL GENERATOR						
	FREQUENCY SETTING	CONNECT GENERATOR OUTPUT TO	THROUGH DUMMY ANTENNA	BAND SWITCH SETTING	GANG CONDENSER SETTING	ADJUST	ADJUST FOR
Discriminator	10.7 MC	6BA6 2nd I-F Pin 1 and Chassis	2500 mmf	FM	Rotor Fully Open	Disc. Pri. (5) Note A	Maximum Deflection
	10.7 MC	6BA6 2nd I-F Pin 1 and Chassis	2500 mmf	FM	Rotor Fully Open	Disc. Sec. (6) Note B	
I-F	10.7 MC Note C	6BA6 1st I-F Pin 1 and Chassis	2500 mmf	FM	Rotor Fully Open	2nd I-F Pri. (7) Sec. (8) Note D	Maximum Deflection
Discriminator	10.7 MC	6BA6 1st I-F Pin 1 and Chassis	2500 mmf	FM	Rotor Fully Open	Disc. Pri. (5) Note D	Maximum Deflection
I-F	10.7 MC	Junction C-32A & B (Dual 100 mmf cond.) And chassis	2500 mmf	FM	Rotor Fully Open	1st I-F Pri. (9) & Sec. (10) 2nd I-F Pri. (7) & Sec. (8) Disc. Pri. (5) In Order Shown Note D	Maximum Deflection
	10.7 MC	Same as above	2500 mmf	FM	Rotor Fully Open	Disc. Sec. (6) Note B	Maximum Deflection
RECHECK I-F ADJUSTMENTS IN ORDER GIVEN							
Oscillator	108.5	Disconnect built-in dipole antenna and connect generator to dipole terminals with resistor in series.	300 ohms	FM	Rotor Fully Open	Osc. C-25	Maximum Deflection
Antenna	104.5	Same as above	300 ohms	FM	Tune rotor for max. AVC voltage	Ant. C-39	Maximum Deflection
RECHECK ANTENNA & OSC. ADJUSTMENTS IN ORDER GIVEN							

FM ALIGNMENT NOTES

NOTE A—The zero center scale DC vacuum tube voltmeter is to be connected between chassis ground and the AVC line. A signal of .1 volt must be fed into the receiver for this adjustment.
Note output voltage on the zero center DC vacuum tube voltmeter

NOTE B—Disconnect zero center DC vacuum tube voltmeter from AVC and connect it at the audio takeoff point at the 27 K ohm resistor (R-10) and its junction with the terminal strip. Adjust for zero voltage indication.

NOTE C—AM I-F coils must be aligned before attempting to align the FM I-F coils.

NOTE D—Connect zero center DC vacuum tube voltmeter as in Note A. Adjust input to give same output on the zero center DC vacuum tube voltmeter as in Note A.

©John F. Rider

Compliments of www.nucow.com

MODEL 05WG-2747B

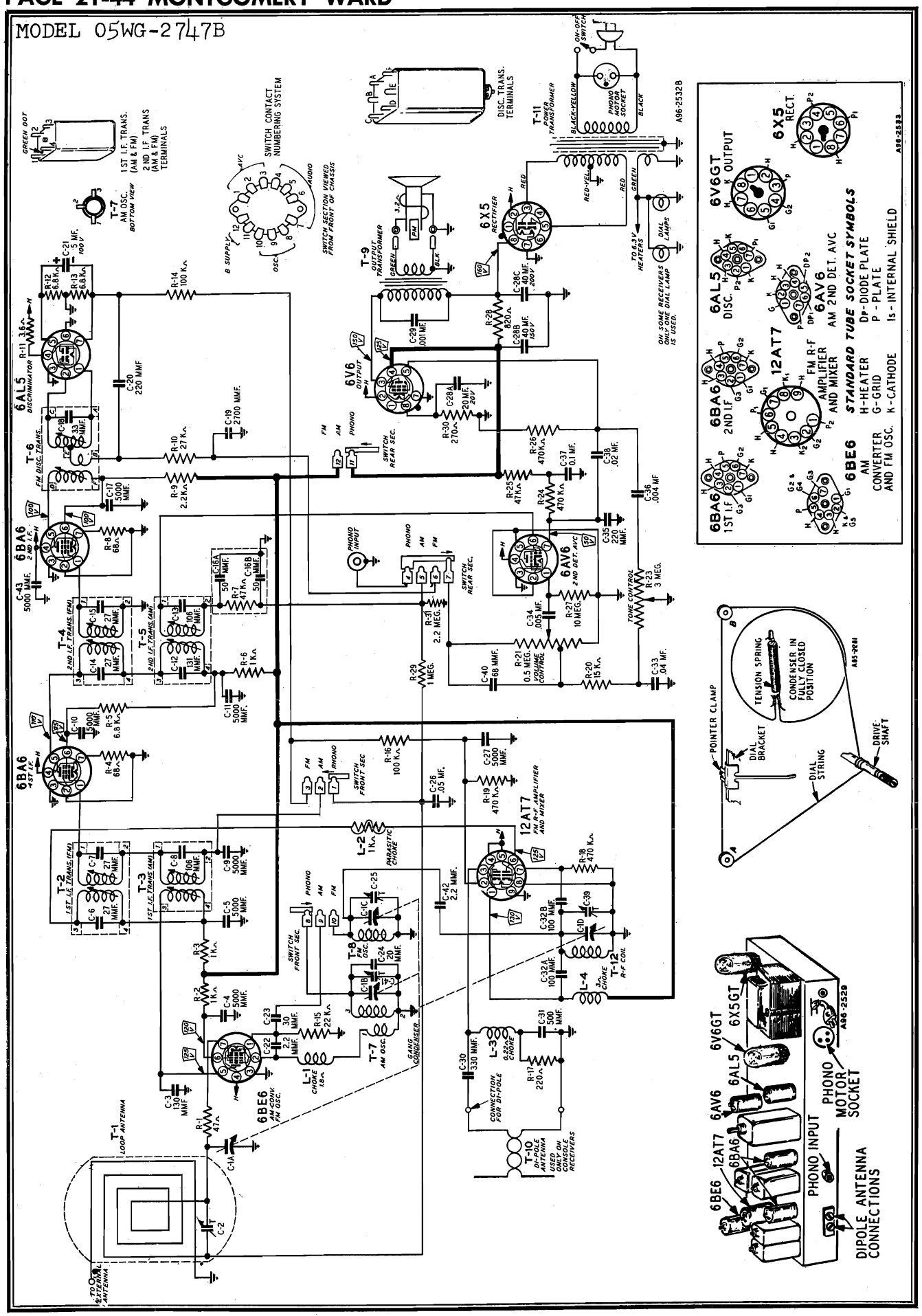

©John F. Rider

Compliments of www.nucow.com

REPLACEMENT PARTS

Ref. No.	Part No.	Description	Qty. Used in Set
		TRANSFORMERS AND COILS	
L-1	35A5	Insulated Choke	1
L-2	9A2068	Parasitic Choke Assembly	1
L-3	35A9	Insulated Choke	1
L-4	35A8	Insulated Choke	1
T-1	9A2099	"B" Range Loop Antenna	1
T-2	9A2060	1st I-F Trans. (FM)	1
T-3	9A2062	1st I-F Trans. (AM)	1
T-4	9A2061	2nd I-F Trans. (FM)	1
T-5	9A2063	2nd I-F Trans. (AM)	1
T-6	9A2064	Discriminator Transformer	1
T-7	9A2065	Oscillator Coil (AM)	1
T-8	9A2067	Oscillator Coil (FM)	1
T-9	51X134	Output Transformer	1
T-10	9A2002	Dipole Antenna	1
T-11	53X291	Power Transformer	1
T-12	9A2066	Antenna Coil (FM)	1
		CAPACITORS	
C-1	14A209	Gang Condenser Assembly	1
C-2	17A256	2-24 mmf Trimmer	1
C-3	47X559	130 mmf Ceramic	1
C-4, C-5, C-9, C-10, C-11, C-17, C-27, C-43	47X507	5000 mmf Ceramic	8
C-6, C-7		Part of T-2 (Ist I-F Trans. FM)	
C-8		Part of T-3 (Ist I-F Trans. AM)	
C-12, C-13		Part of T-5 (2nd I-F Trans. AM)	
C-14, C-15		Part of T-4 (2nd I-F Trans. FM)	
C-16A, C-16B	47X112	50-50 mmf Dual Mica	1
C-18		Part of T-6 (Discriminator Trans.)	
C-19	47X492	2700 mmf Molded Mica	1
C-20, C-35	47X468	220 mmf Ceramic	2
C-21	45X361	5 mf 100 V Dry Electrolytic	1
C-22, C-42	47X557	2.2 mmf Ceramic	2
C-23	47X558	30 mmf Ceramic	1
C-24	47X516	20 mmf Ceramic	1
C-25	17A255	1-8 mmf Trimmer	1
C-26	B66503	.05 mf 200 V Tubular	1
C-28A, C-28B, C-28C	45X360	20 mf 20 V; 40 mf 150 V; 40 mf 200 V Dry Electrolytic	1
C-29	H66102	.001 mf 800 V Tubular	1
C-30	47X470	330 mmf Molded Mica	1
C-31	47X508	500 mmf Ceramic	1
C-32A, C-32B	76X4	100 mmf Dual Ceramic	1
C-33	B66403	.04 mf 200 V Tubular	1
C-34	D66502	.005 mf 400 V Tubular	1
C-36	B66402	.004 mf 200 V Tubular	1
C-37	D66104	.1 mf 400 V Tubular	1
C-38	D66203	.02 mf 400 V Tubular	1
C-39, C-41		Part of C-1 (Gang Condenser)	
C-40	47X471	68 mmf Ceramic	1
		RESISTORS	
		Ohms / Watts	
R-1	B85470	47 0.5 Carbon	1
R-2, R-3, R-6	B85102	1000 0.5 Carbon	3
R-4, R-8	B84680	68 0.5 Carbon	2
R-5, R-12, R-13	B84682	6800 0.5 Carbon	3
R-7, R-25	B85473	47 K 0.5 Carbon	2
R-9	B85222	2200 0.5 Carbon	1
R-10	B85273	27 K 0.5 Carbon	1
R-11	43X233	3.6 0.5 Wirewound	1
R-14, R-16	B85104	100 K 0.5 Carbon	2
R-15	B85223	22 K 0.5 Carbon	1
R-17	B84221	220 0.5 Carbon	1
R-18, R-19, R-24, R-26	B85474	470 K 0.5 Carbon	4
R-20	B85153	15 K 0.5 Carbon	1
R-21	36X372	.5 meg. Volume Control & Switch	1
R-23	40X285	3 meg. Tone Control	1
R-27	B85106	10 meg. 0.5 Carbon	1
R-28	D84821	820 2.0 Carbon	1
R-29	B85105	1 meg. 0.5 Carbon	1
R-30	B84271	270 0.5 Carbon	1
R-31	B85225	2.2 meg. 0.5 Carbon	1

TYPE V-28A166 RECORD CHANGER PARTS

V-2727B	Motor Assembly, 60 cycles 105-125 Volts AC	1
Shure P-81	Crystal Cartridge	1
	Semi-Permanent Needle	1
	(When ordering needles, specify part number and letter stamped on cartridge.)	
	MISCELLANEOUS	
12A477	8" P.M. Speaker	1
3A303	Tube Socket—Octal (8 prong) Molded	2
3A426	Tube Socket—Miniature	4
3A427	Tube Socket (12AT7)	1
3A443	Tube Socket (6BE6)	1
3A304	Phono Motor Socket	1
3A305	Phono Socket—Single Pin Tip	1
2A395	Band Change Switch	1
13X546	Line Cord and Plug Assembly	1
4X1020	Escutcheon	1
10A695	Knob (Tuning)	1
10A696	Knob (Volume Control & Switch)	1
10A697	Knob (Tone)	1
10A698	Knob (Phono—BC—FM)	1
	DIAL AND DRIVE ASSEMBLY	
58X727	Dial Glass	1
24X446	Idler Pulley	2
15X257	Pointer	1
25X1569	Dial Bracket	1
7A103	No. 47 Pilot Light Bulb	2
7A202	Pilot Light Socket Assembly	1
26X486	Drive Shaft	1
41X26	Reflector, Dial Light	2
28X113	Drive Cord Tension Spring	1
10X56	Drive Cord Assembly	1
19X192	"C" Washer (Mtg. drive Shaft)	2
6X66	Rubber Grommet (Mtg. gang cond.)	3

© John F. Rider

Compliments of www.nucow.com

MODELS 94WG-2748C,
05WG-2748C

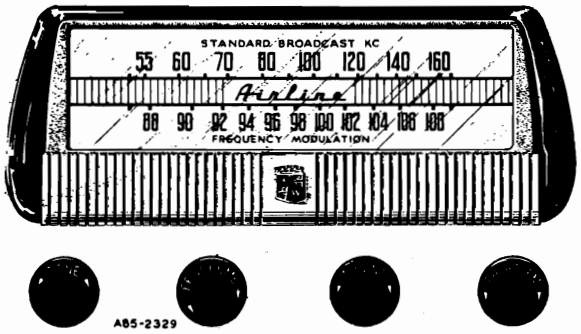

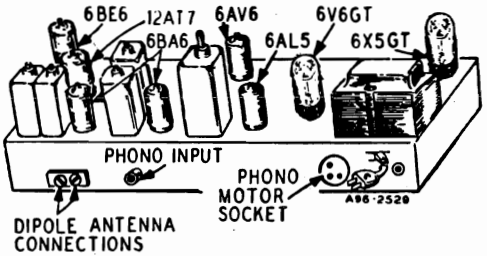

ELECTRICAL SPECIFICATIONS

Power Supply..... 105-125 volts AC 60 cycles, 40 watts. 60 watts with record changer.

Frequency Ranges..... Broadcast 540-1600 KC
Frequency Modulation 88-108 MC

Intermediate Frequency... AM—455 KC
FM—10.7 MC

Selectivity..... AM—45 KC broad at 1000 times signal, measured at 1000 KC
I.F. FM—200 KC broad at 2 times down
I.F. FM—950 KC broad at 200 times down

AM Sensitivity .....(For .5 watt output with external antenna) 25 microvolts average

FM Sensitivity.....(For .5 watt output) 25 microvolts average

Power Output ..... 1.9 watts maximum
0.8 watts 10% distortion

Loud Speaker..... 10" PM Dynamic

Voice Coil Impedance..... 3.2 ohms 400 cycles

Tube and Dial Lamp Complement

1 6BE6 AM Converter & FM Osc.
1 6BA6 1st I-F Amplifier
1 6BA6 2nd I-F Amplifier
1 6AL5 FM Discriminator
1 6AV6 Audio Amplifier, AM 2nd Detector and AVC
1 6V6GT Audio Output
1 6X5GT Rectifier
1 12AT7 R-F Amplifier & Mixer
2 No. 47 Dial Lamps

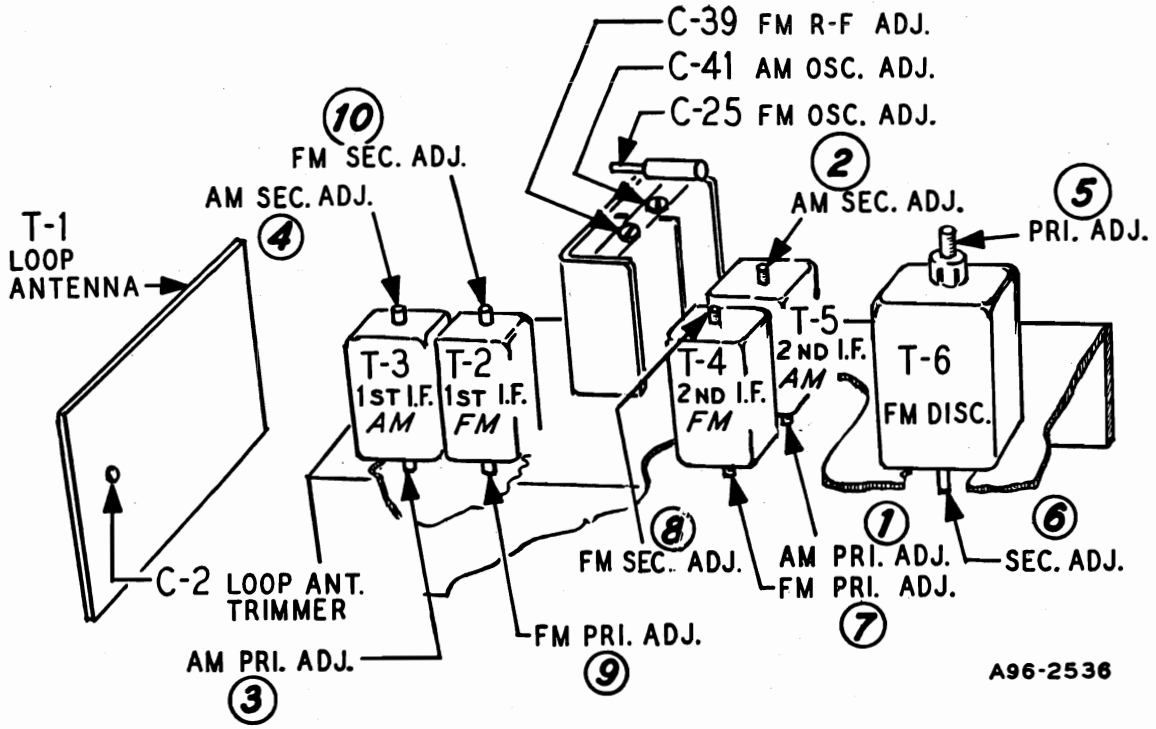

©John F. Rider

Compliments of www.nucow.com

MODELS 94WG-2748C,
05WG-2748C

DRIVE CORD REPLACEMENT

DIAL POINTER CORD

Use a new 10X56 drive cord assembly or a new length of cord 46 inches long for the installation. Install the cord as shown in the illustration, winding three turns clockwise around the drive shaft with the turns progressing away from the chassis. After completing the installation rotate the drive shaft a few turns to take up the slack in the cord.

TUBE SOCKET VOLTAGES

Socket voltages are shown on the schematic diagram of the tube socket terminals. All voltages are between the socket terminal and chassis ground. Plate, screen and cathode voltages were taken with a 1000 ohm-per-volt meter with a 300 volt scale used for plate and screen voltages. Audio grid voltages were read with a vacuum tube volt-meter.

Conditions of measurement are:

Line voltage .....117 Volts AC
Signal Input .....None

A variation of ±10% is usually permissible.

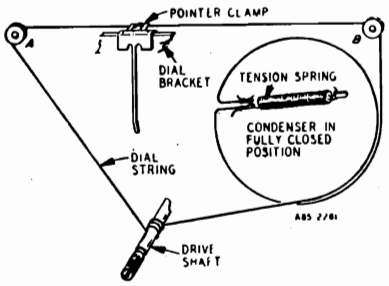

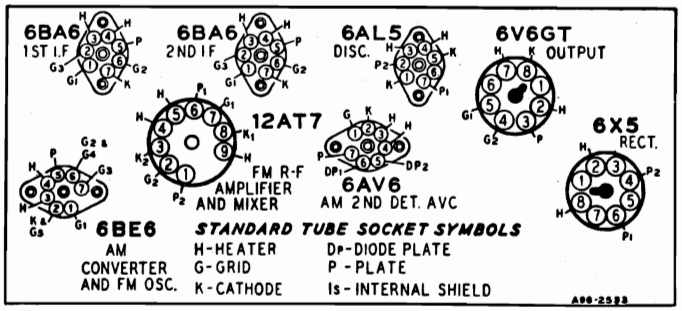

ALIGNMENT PROCEDURES

AM STAGES

The following is required for aligning:
An All Wave Signal Generator Which Will Provide an Accurately Calibrated Signal at the Test Frequencies as Listed.
Output Indicating Meter, Non-Metallic Screwdriver, Dummy Antennas — .1 mf, and 50mmf.

Volume Control Maximum all Adjustments.
Connect Radio Chassis to Ground Post of Signal Generator with a Short Heavy Lead.
Allow Chassis and Signal Generator to "Heat Up" for Several Minutes.

SIGNAL GENERATOR						
FREQUENCY SETTING	CONNECT GENERATOR OUTPUT TO	THROUGH DUMMY ANTENNA	CONNECT GROUND TO	GANG CONDENSER SETTING	ADJUST	ADJUST FOR
455 KC	Control Grid 1st 6BA6 Pin No. 1	.1 mf	Chassis Base	Rotor Fully Open	2nd I.F. Pri. (1) and Sec. (2)	Maximum Output
455 KC	Control Grid 6BE6 Pin No. 7 1st Det.	.1 mf	Chassis Base	Rotor Fully Open	1st I.F. Pri. (3) and Sec. (4)	Maximum Output
455 KC	Control Grid 6BE6 Pin No. 7	.1 mf	Chassis Base	Rotor Fully Open	2nd I.F. Pri. (1) and Sec. (2)	Maximum Output
1620 KC	Control Grid 6BE6 Pin No. 7	.1 mf	Chassis Base	Rotor Fully Open	Oscillator C-41	Maximum Output
1400 KC	External Antenna Terminal	50 mmf	Chassis Base	Turn Rotor to Max. Output. Set Pointer to 1400 KC See Note A	Antenna C-2	Maximum Output

NOTE A—If the pointer is not at 1400 KC on the dial, reset pointer to the 1400 KC mark on the dial scale.

FM STAGES

The following is required for aligning:
An accurately calibrated signal generator providing unmodulated signals at the test frequencies listed below.
Non-metallic screwdriver.
Dummy Antennas and I-F Loading Resistor—2500 mmf, 300 ohms

Zero center scale DC vacuum tube voltmeter having a range of approximately 3 volts.
(If a zero center scale meter is not available, a standard scale vacuum tube voltmeter may be used by reversing the meter connections for negative readings).
Allow chassis and signal generator to "Heat Up" for several minutes.

©John F. Rider

Compliments of www.nucow.com

MODELS 94WG-2748C,
05WG-2748C

	SIGNAL GENERATOR		THROUGH DUMMY ANTENNA	BAND SWITCH SETTING	GANG CONDENSER SETTING	ADJUST	ADJUST FOR
	FREQUENCY SETTING	CONNECT GENERATOR OUTPUT TO					
Discriminator	10.7 MC	6BA6 2nd I-F Pin 1 and Chassis	2500 mmf	FM	Rotor Fully Open	Disc. Pri. (5) Note A	Maximum Deflection
	10.7 MC	6BA6 2nd I-F Pin 1 and Chassis	2500 mmf	FM	Rotor Fully Open	Disc. Sec. (6) Note B	
I-F	10.7 MC Note C	6BA6 1st I-F Pin 1 and Chassis	2500 mmf	FM	Rotor Fully Open	2nd I-F Pri. (7) Sec. (8) Note D	Maximum Deflection
Discriminator	10.7 MC	6BA6 1st I-F Pin 1 and Chassis	2500 mmf	FM	Rotor Fully Open	Disc. Pri. (5) Note D	Maximum Deflection
I-F	10.7 MC	Junction C-32A & B (Dual 100 mmf cond.) And chassis	2500 mmf	FM	Rotor Fully Open	1st I-F Pri. (9) & Sec. (10) 2nd I-F Pri. (7) & Sec. (8) Disc. Pri. (5) In Order Shown Note D	Maximum Deflection
	10.7 MC	Same as above	2500 mmf	FM	Rotor Fully Open	Disc. Sec. (6) Note B	
RECHECK I-F ADJUSTMENTS IN ORDER GIVEN							
Oscillator	108.5	Disconnect built-in dipole antenna and connect generator to dipole terminals with resistor in series.	300 ohms	FM	Rotor Fully Open	Osc. C-25	Maximum Deflection
Antenna	104.5	Same as above	300 ohms	FM	Tune rotor for max. AVC voltage	Ant. C-39	Maximum Deflection
RECHECK ANTENNA & OSC. ADJUSTMENTS IN ORDER GIVEN							

FM ALIGNMENT NOTES

NOTE A—The zero center scale DC vacuum tube voltmeter is to be connected between chassis ground and the AVC line. A signal of .1 volt must be fed into the receiver for this adjustment.
Note output voltage on the zero center DC vacuum tube voltmeter.

NOTE B—Disconnect zero center DC vacuum tube voltmeter from AVC and connect it at the audio takeoff point at the 27 K ohm resistor (R-10) and its junction with the terminal strip. Adjust for zero voltage indication.

NOTE C—AM I-F coils must be aligned before attempting to align the FM I-F coils.

NOTE D—Connect zero center DC vacuum tube voltmeter as in Note A. Adjust input to give same output on the zero center DC vacuum tube voltmeter as in Note A.

Ref. No.	Part No.	Description	Qty. Used in Set
		CAPACITORS	
C-1	14A209	Gang Condenser Assembly	1
C-2	17A256	2-24 mmf Trimmer	1
C-3	47X559	130 mmf Ceramic	1
C-4, C-5, C-9, C-10, C-11, C-17, C-27, C-43	47X507	5000 mmf Ceramic	8
C-6, C-7		Part of T-2 (Ist I-F Trans. FM)	
C-8		Part of T-3 (Ist I-F Trans. AM)	
C-12, C-13		Part of T-5 (2nd I-F Trans. AM)	
C-14, C-15		Part of T-4 (2nd I-F Trans. FM)	
C-16A, C-16B	47X112	50-50 mmf Dual Mica	1
C-18		Part of T-6 (Discriminator Trans.)	
C-19	47X492	2700 mmf Molded Mica	1
C-20, C-35	47X468	220 mmf Ceramic	2
C-21	45X361	5 mf 100 V Dry Electrolytic	1
C-22, C-42	47X557	2.2 mmf Ceramic	2
C-23	47X558	30 mmf Ceramic	1
C-24	47X516	20 mmf Ceramic	1
C-25	17A255	1-8 mmf Trimmer	1
C-26	B66503	.05 mf 200 V Tubular	1
C-28A, C-28B, C-28C	45X360	20 mf 20 V, 40 mf 150 V, 40 mf 200 V Dry Electrolytic	1
C-29	H66102	.001 mf 800 V Tubular	1
C-30	47X470	330 mmf Molded Mica	1
C-31	47X508	500 mmf Ceramic	1
C-32A, C-32B	76X4	100 mmf Dual Ceramic	1
C-33	B66403	.04 mf 200 V Tubular	1
C-34	D66502	.005 mf 400 V Tubular	1
C-36	B66402	.004 mf 200 V Tubular	1
C-37	D66104	.1 mf 400 V Tubular	1
C-38	D66203	.02 mf 400 V Tubular	1
C-39, C-41		Part of C-1 (Gang Condenser)	
C-40	47X471	68 mmf Ceramic	1

©John F. Rider

Compliments of www.nucow.com

MODELS 94WG-2748C, 05WG-2748C

RESISTORS

Ref. No.	Part No.	Ohms	Watts	Description	Qty. Used in Set
R-1	B85470	47	0.5	Carbon	1
R-2, R-3, R-6	B85102	1000	0.5	Carbon	3
R-4, R-8	B84680	68	0.5	Carbon	2
R-5, R-12, R-13	B84682	6800	0.5	Carbon	3
R-7, R-25	B85473	47 K	0.5	Carbon	2
R-9	B85222	2200	0.5	Carbon	1
R-10	B85273	27 K	0.5	Carbon	1
R-11	43X233	3.6	0.5	Wirewound	1
R-14, R-16	B85104	100 K	0.5	Carbon	2
R-15	B85223	22 K	0.5	Carbon	1
R-17	B84221	220	0.5	Carbon	1
R-18, R-19, R-24, R-26	B85474	470 K	0.5	Carbon	4
R-20	B85153	15 K	0.5	Carbon	1
R-21	36X372	.5 meg.		Volume Control & Switch	1
R-23	40X285	3 meg.		Tone Control	1
R-27	B85106	10 meg.	0.5	Carbon	1
R-28	D84821	820	2.0	Carbon	1
R-29	B85105	1 meg.	0.5	Carbon	1
R-30	B84271	270	0.5	Carbon	1
R-31	B85225	2.2 meg.	0.5	Carbon	1

TRANSFORMERS AND COILS

Ref. No.	Part No.	Description	Qty. Used in Set
L-1	35A5	Insulated Choke	1
L-2	9A2103	Parasitic Choke Assembly	1
L-3	35A9	Insulated Choke	1
L-4	35A8	Insulated Choke	1
T-1	9A2146	"B" Range Loop Antenna	1
T-2	9A2060	1st I-F Trans. (FM)	1
T-3	9A2062	1st I-F Trans. (AM)	1
T-4	9A2061	2nd I-F Trans. (FM)	1
T-5	9A2063	2nd I-F Trans. (AM)	1
T-6	9A2064	Discriminator Transformer	1
T-7	9A2065	Oscillator Coil (AM)	1
T-8	9A2067	Oscillator Coil (FM)	1
T-9	51X134	Output Transformer	1
T-10	9A2004	Dipole Antenna	1
T-11	53X291	Power Transformer	1
T-12	9A2066	Antenna Coil (FM)	1

MISCELLANEOUS

Ref. No.	Part No.	Description	Qty. Used in Set
	12A480	10" P.M. Speaker	1
	3A435	Tube Socket—Octal (8 prong) Molded	2
	3A426	Tube Socket (1st 6BA6)	1
	3A427	Tube Socket (6BE6)	1
	3A443	Tube Socket (12AT7)	1
	3A439	Tube Socket (Miniature)	3
	3A304	Phono Motor Socket	1
	3A305	Phono Socket—Single Pin Tip	1
	2A393	Band Change Switch	1
	13X546	Line Cord and Plug Assembly	1
	4X1020	Escutcheon	1
	10A695	Knob (Tuning)	1
	10A696	Knob (Volume Control & Switch)	1
	10A697	Knob (Tone)	1
	10A698	Knob (Phono-BC-FM)	1

DIAL AND DRIVE ASSEMBLY

58X727	Dial Glass	1
24X446	Idler Pulley	2
15X257	Pointer	1
25X1569	Dial Bracket	1
7A103	No. 47 Pilot Light Bulb	2
7A202	Pilot Light Socket Assembly	1
26X486	Drive Shaft	1
41X26	Reflector, Dial Light	2
28X113	Drive Cord Tension Spring	1
10X55	Drive Cord Assembly	1
19X192	"C" Washer (Mtg. drive Shaft)	2
6X66	Rubber Grommet (Mtg. gang cond.)	3

TYPE G.I.-28A168 RECORD CHANGER PARTS

(Model 94WG-2748C)

G.I.-56-76507	Motor Assembly, 60 cycles 105-125 Volts AC	1
AST-LT3D	Crystal Cartridge	1
	Needle, Regular	1
	Needle, Microgroove (Red)	1

(When ordering needles, specify part number and letter stamped on cartridge.)

TYPE G.I.-29A169 RECORD CHANGER PARTS

(Model 05WG-2748C)

G.I.-56-76507	Motor Assembly, 60 cycles 105-125 Volts AC	1
E-V No. 33-4	Crystal Cartridge with Needle	1
	Semi-Permanent Needle Only	1

(When ordering needles, specify part number and letter stamped on cartridge.)

©John F. Rider

Compliments of www.nucow.com

MODELS 94WG-2748C,
05WG-2748C

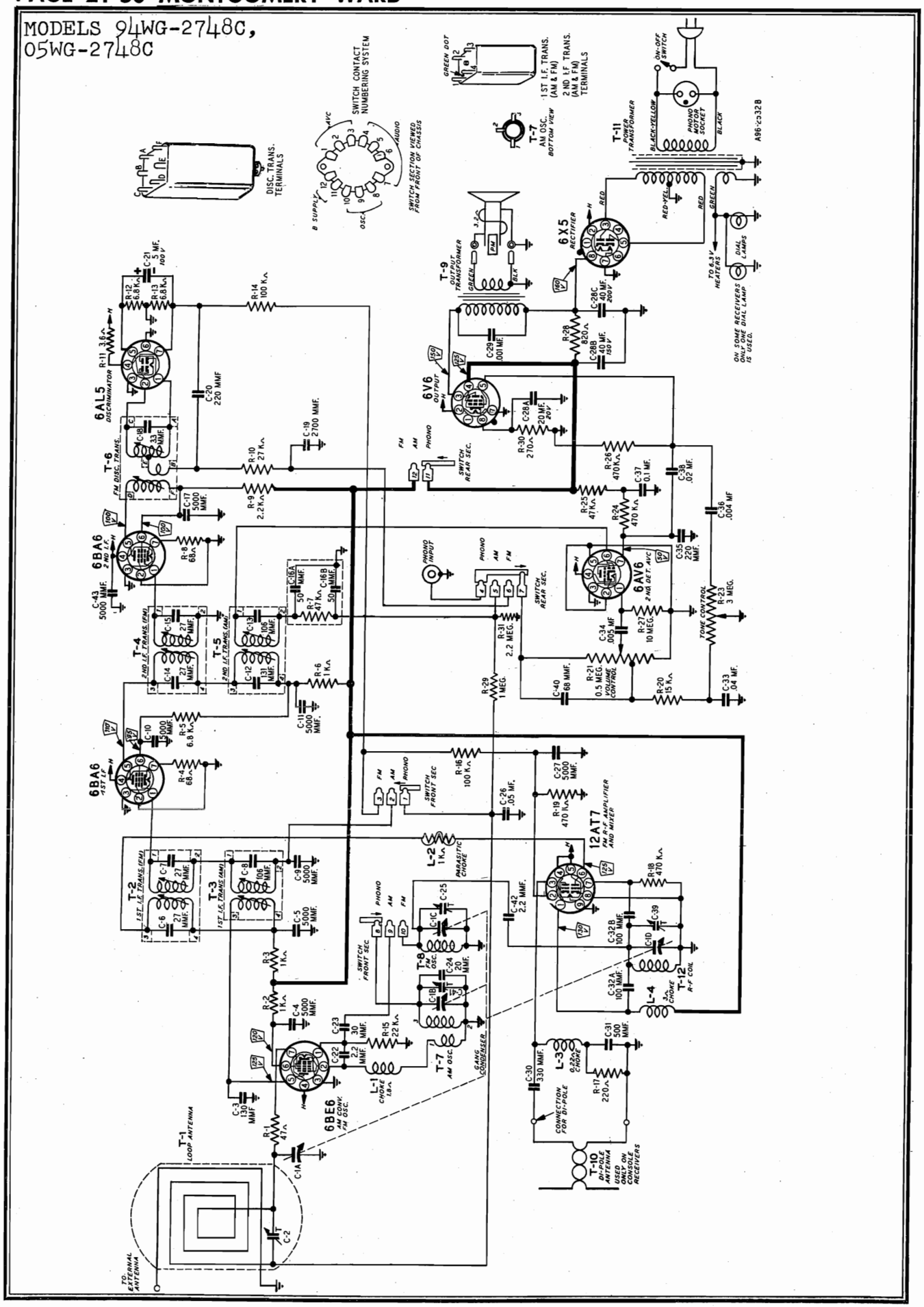

©John F. Rider

Compliments of www.nucow.com

MODEL 05WG-2748D

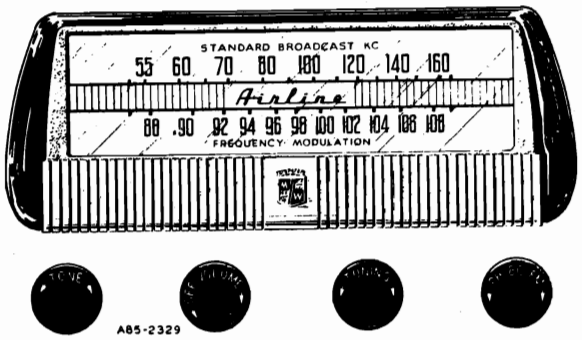

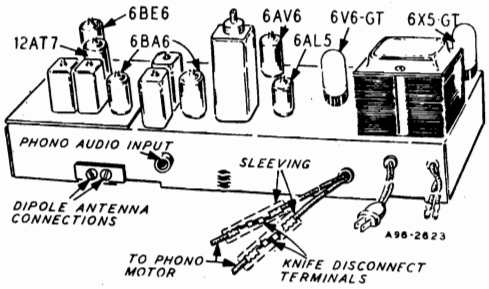

ELECTRICAL SPECIFICATIONS

Power Supply..... 105-125 volts AC 60 cycles, 40 watts. 60 watts with record changer.

Frequency Ranges..... Broadcast 540-1600 KC
Frequency Modulation 88-108 MC

Intermediate Frequency.... AM—455 KC
FM—10.7 MC

Selectivity..... AM—45 KC broad at 1000 times signal, measured at 1000 KC
I.F. FM—200 KC broad at 2 times down
I.F. FM—950 KC broad at 200 times down

AM Sensitivity..... (For .5 watt output with external antenna) 25 microvolts average

FM Sensitivity..... (For .5 watt output) 25 microvolts average

Power Output..... 1.9 watts maximum
0.8 watts 10% distortion

Loud Speaker..... 10" PM Dynamic

Voice Coil Impedance..... 3.2 ohms 400 cycles

Tube and Dial Lamp Complement

1 6BE6 AM Converter & FM Osc.
1 6BA6 1st I-F Amplifier
1 6BA6 2nd I-F Amplifier
1 6AL5 FM Discriminator
1 6AV6 Audio Amplifier, AM 2nd Detector and AVC
1 6V6GT Audio Output
1 6X5GT Rectifier
1 12AT7 R-F Amplifier & Mixer
2 No. 47 Dial Lamps

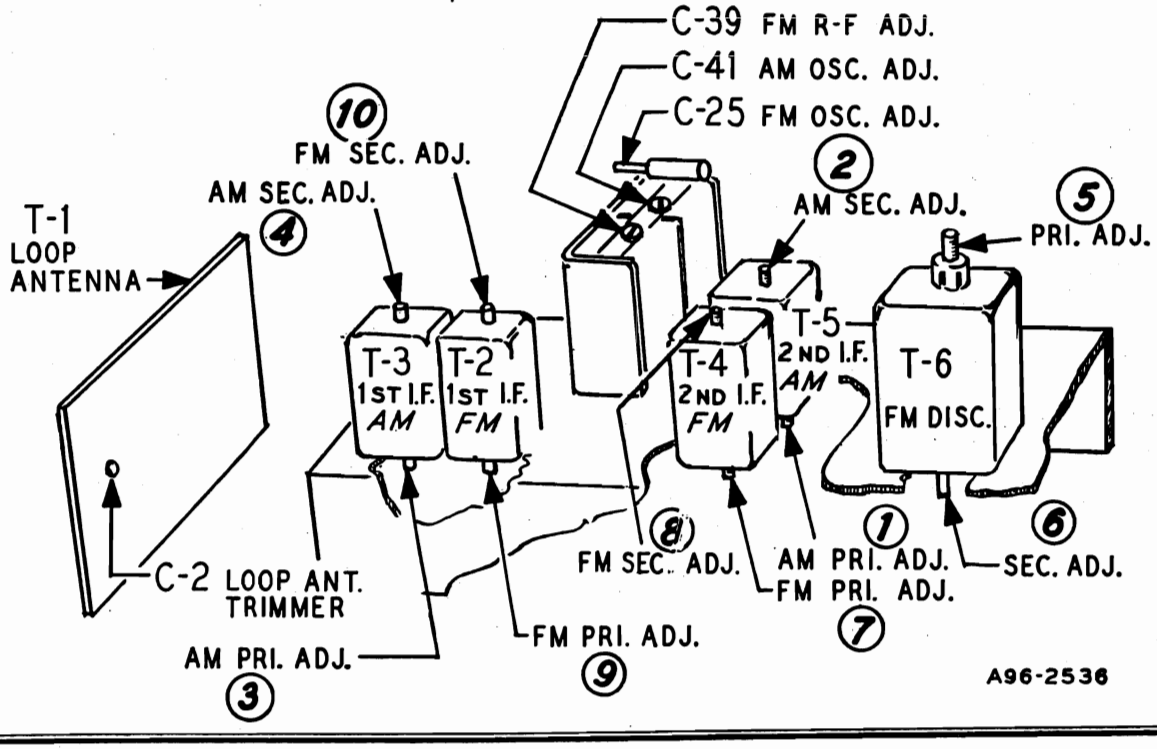

©John F. Rider

Compliments of www.nucow.com

MODEL 05WG-2748D

DRIVE CORD REPLACEMENT

DIAL POINTER CORD

Use a new 10X56 drive cord assembly or a new length of cord 46 inches long for the installation. Install the cord as shown in the illustration, winding three turns clockwise around the drive shaft with the turns progressing away from the chassis. After completing the installation rotate the drive shaft a few turns to take up the slack in the cord.

TUBE SOCKET VOLTAGES

Socket voltages are shown on the schematic diagram of the tube socket terminals. All voltages are between the socket terminal and chassis ground. Plate, screen and cathode voltages were taken with a 1000 ohm-per-volt meter with a 300 volt scale used for plate and screen voltages. Audio grid voltages were read with a vacuum tube volt-meter.

Conditions of measurement are:

Line voltage .....117 Volts AC
Signal Input .....None

A variation of ±10% is usually permissible.

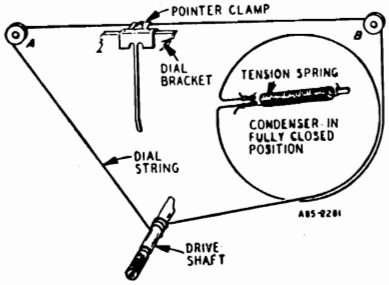

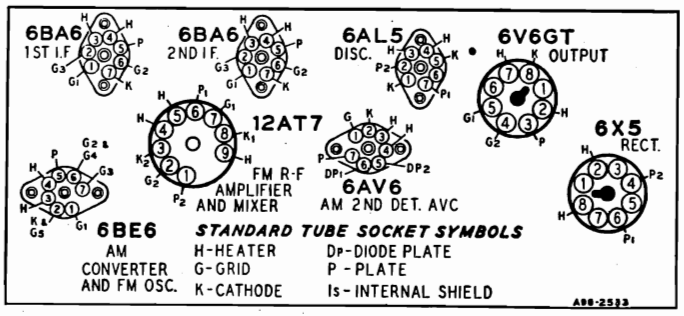

ALIGNMENT PROCEDURES

AM STAGES

The following is required for aligning:
An All Wave Signal Generator Which Will Provide an Accurately Calibrated Signal at the Test Frequencies as Listed.
Output Indicating Meter, Non-Metallic Screwdriver, Dummy Antennas — .1 mf, and 50mmf.

Volume Control Maximum all Adjustments.
Connect Radio Chassis to Ground Post of Signal Generator with a Short Heavy Lead.
Allow Chassis and Signal Generator to "Heat Up" for Several Minutes.

SIGNAL GENERATOR						
FREQUENCY SETTING	CONNECT GENERATOR OUTPUT TO	THROUGH DUMMY ANTENNA	CONNECT GROUND TO	GANG CONDENSER SETTING	ADJUST	ADJUST FOR
455 KC	Control Grid 1st 6BA6 Pin No. 1	.1 mf	Chassis Base	Rotor Fully Open	2nd I.F. Pri. (1) and Sec. (2)	Maximum Output
455 KC	Control Grid 6BE6 Pin No. 7 1st Det.	.1 mf	Chassis Base	Rotor Fully Open	1st I.F. Pri. (3) and Sec. (4)	Maximum Output
455 KC	Control Grid 6BE6 Pin No. 7	.1 mf	Chassis Base	Rotor Fully Open	2nd I.F. Pri. (1) and Sec. (2)	Maximum Output
1620 KC	Control Grid 6BE6 Pin No. 7	.1 mf	Chassis Base	Rotor Fully Open	Oscillator C-41	Maximum Output
1400 KC	External Antenna Terminal	50 mmf	Chassis Base	Turn Rotor to Max. Output. Set Pointer to 1400 KC See Note A	Antenna C-2	Maximum Output

NOTE A—If the pointer is not at 1400 KC on the dial, reset pointer to the 1400 KC mark on the dial scale.

FM STAGES

The following is required for aligning:
An accurately calibrated signal generator providing unmodulated signals at the test frequencies listed below.
Non-metallic screwdriver.
Dummy Antennas and I-F Loading Resistor—2500 mmf, 300 ohms

Zero center scale DC vacuum tube voltmeter having a range of approximately 3 volts.
(If a zero center scale meter is not available, a standard scale vacuum tube voltmeter may be used by reversing the meter connections for negative readings).
Allow chassis and signal generator to "Heat Up" for several minutes.

©John F. Rider

Compliments of www.nucow.com

MODEL 05WG-2748D

	SIGNAL GENERATOR FREQUENCY SETTING	CONNECT GENERATOR OUTPUT TO	THROUGH DUMMY ANTENNA	BAND SWITCH SETTING	GANG CONDENSER SETTING	ADJUST	ADJUST FOR
Discriminator	10.7 MC	6BA6 2nd I-F Pin 1 and Chassis	2500 mmf	FM	Rotor Fully Open	Disc. Pri. (5) Note A	Maximum Deflection
	10.7 MC	6BA6 2nd I-F Pin 1 and Chassis	2500 mmf	FM	Rotor Fully Open	Disc. Sec. (6) Note B	
I-F	10.7 MC Note C	6BA6 1st I-F Pin 1 and Chassis	2500 mmf	FM	Rotor Fully Open	2nd I-F Pri. (7) Sec. (8) Note D	Maximum Deflection
Discriminator	10.7 MC	6BA6 1st I-F Pin 1 and Chassis	2500 mmf	FM	Rotor Fully Open	Disc. Pri. (5) Note D	Maximum Deflection
I-F	10.7 MC	Junction C-32A & B (Dual 100 mmf cond.) And chassis	2500 mmf	FM	Rotor Fully Open	1st I-F Pri. (9) & Sec. (10) 2nd I-F Pri. (7) & Sec. (8) Disc. Pri. (5) In Order Shown Note D	Maximum Deflection
	10.7 MC	Same as above	2500 mmf	FM	Rotor Fully Open	Disc. Sec. (6) Note B	
RECHECK I-F ADJUSTMENTS IN ORDER GIVEN							
Oscillator	108.5	Disconnect built-in dipole antenna and connect generator to dipole terminals with resistor in series.	300 ohms	FM	Rotor Fully Open	Osc. C-25	Maximum Deflection
Antenna	104.5	Same as above	300 ohms	FM	Tune rotor for max. AVC voltage	Ant. C-39	Maximum Deflection
RECHECK ANTENNA & OSC. ADJUSTMENTS IN ORDER GIVEN							

FM ALIGNMENT NOTES

NOTE A—The zero center scale DC vacuum tube voltmeter is to be connected between chassis ground and the AVC line. A signal of .1 volt must be fed into the receiver for this adjustment.
Note output voltage on the zero center DC vacuum tube voltmeter.

NOTE B—Disconnect zero center DC vacuum tube voltmeter from AVC and connect it at the audio takeoff point at the 27 K ohm resistor (R-10) and its junction with the terminal strip. Adjust for zero voltage indication.

NOTE C—AM I-F coils must be aligned before attempting to align the FM I-F coils.

NOTE D—Connect zero center DC vacuum tube voltmeter as in Note A. Adjust input to give same output on the zero center DC vacuum tube voltmeter as in Note A.

CAPACITORS

Ref. No.	Part No.	Description			Qty. Used in Set
C-1	14A209	Gang Condenser Assembly			1
C-2	17A256	2-24 mmf		Trimmer	1
C-3	47X559	130 mmf		Ceramic	1
C-4, C-5, C-9, C-10, C-11, C-17, C-27, C-43	47X507	5000 mmf		Ceramic	8
C-6, C-7		Part of T-2 (Ist I-F Trans. FM)			
C-8		Part of T-3 (Ist I-F Trans. AM)			
C-12, C-13		Part of T-5 (2nd I-F Trans. AM)			
C-14, C-15		Part of T-4 (2nd I-F Trans. FM)			
C-16A, C-16B	47X112	50-50 mmf		Dual Mica	1
C-18		Part of T-6 (Discriminator Trans.)			
C-19	47X492	2700 mmf		Molded Mica	1
C-20, C-35	47X468	220 mmf		Ceramic	2
C-21	45X361	5 mf	100 V	Dry Electrolytic	1
C-22, C-42	47X557	2.2 mmf		Ceramic	2
C-23	47X558	30 mmf		Ceramic	1
C-24	47X516	20 mmf		Ceramic	1
C-25	17A255	1-8 mmf		Trimmer	1
C-26, C-44	B66503	.05 mf	200 V	Tubular	2
C-28A, C-28B, C-28C	45X360	20 mf / 40 mf / 40 mf	20 V / 150 V / 200 V	Dry Electrolytic	1
C-29	H66102	.001 mf	800 V	Tubular	1
C-30	47X470	330 mmf		Molded Mica	1
C-31	47X508	500 mmf		Ceramic	1
C-32A, C-32B	76X4	100 mmf		Dual Ceramic	1
C-33	B66403	.04 mf	200 V	Tubular	1
C-34	D66502	.005 mf	400 V	Tubular	1
C-36	B66402	.004 mf	200 V	Tubular	1
C-37	D66104	.1 mf	400 V	Tubular	1
C-38	D66203	.02 mf	400 V	Tubular	1
C-39, C-41		Part of C-1 (Gang Condenser)			
C-40	47X471	68 mmf		Ceramic	1

©John F. Rider

Compliments of www.nucow.com

MODEL 05WG-2748D

RESISTORS

Ref. No.	Part No.	Ohms	Watts	Description	Qty. Used in Set
R-1	B85470	47	0.5	Carbon	1
R-2, R-3, R-6	B85102	1000	0.5	Carbon	3
R-4, R-8	B84680	68	0.5	Carbon	2
R-5, R-12, R-13	B84682	6800	0.5	Carbon	3
R-7, R-25	B85473	47 K	0.5	Carbon	2
R-9	B85222	2200	0.5	Carbon	1
R-10	B85273	27 K	0.5	Carbon	1
R-11	43X233	3.6	0.5	Wirewound	1
R-14, R-16	B85104	100 K	0.5	Carbon	2
R-15	B85223	22 K	0.5	Carbon	1
R-17	B84221	220	0.5	Carbon	1
R-18, R-19, R-24, R-26	B85474	470 K	0.5	Carbon	4
R-20	B85153	15 K	0.5	Carbon	1
R-21	36X372	.5 meg.		Volume Control & Switch	1
R-23	40X285	3 meg.		Tone Control	1
R-27	B85106	10 meg.	0.5	Carbon	1
R-28	D84821	820	2.0	Carbon	1
R-29	B85105	1 meg.	0.5	Carbon	1
R-30	B84271	270	0.5	Carbon	1
R-31	B84274	270 K	0.5	Carbon	1

TRANSFORMERS AND COILS

Ref. No.	Part No.	Description	Qty. Used in Set
L-1	35A5	Insulated Choke	1
L-2	9A2103	Parasitic Choke Assembly	1
L-3	35A9	Insulated Choke	1
L-4	35A8	Insulated Choke	1
T-1	9A2146	"B" Range Loop Antenna	1
T-2	9A2060	1st I-F Trans. (FM)	1
T-3	9A2062	1st I-F Trans. (AM)	1
T-4	9A2061	2nd I-F Trans. (FM)	1
T-5	9A2063	2nd I-F Trans. (AM)	1
T-6	9A2064	Discriminator Transformer	1
T-7	9A2065	Oscillator Coil (AM)	1
T-8	9A2067	Oscillator Coil (FM)	1
T-9	51X134	Output Transformer	1
T-10	9A2004	Dipole Antenna	1
T-11	53X291	Power Transformer	1
T-12	9A2066	Antenna Coil (FM)	1

MISCELLANEOUS

Ref. No.	Part No.	Description	Qty. Used in Set
	12A480	10" P.M. Speaker	1
	3A435	Tube Socket—Octal (8 prong) Molded	2
	3A426	Tube Socket (1st 6BA6)	1
	3A427	Tube Socket (6BE6)	1
	3A443	Tube Socket (12AT7)	1
	3A439	Tube Socket (Miniature)	3
	*3A304	Phono Motor Socket	1
	3A305	Phono Socket—Single Pin Tip	1
	2A393	Band Change Switch	1
	13X546	Line Cord and Plug Assembly	1
	4X1020	Escutcheon	1
	10A695	Knob (Tuning)	1
	10A696	Knob (Volume Control & Switch)	1
	10A697	Knob (Tone)	1
	10A698	Knob (Phono-BC-FM)	1

*In some receivers knife type connectors are used.

DIAL AND DRIVE ASSEMBLY

Part No.	Description	Qty. Used in Set
58X727	Dial Glass	1
24X446	Idler Pulley	2
15X257	Pointer	1
25X1569	Dial Bracket	1
7A103	No. 47 Pilot Light Bulb	2
7A202	Pilot Light Socket Assembly	1
26X486	Drive Shaft	1
41X26	Reflector, Dial Light	2
28X113	Drive Cord Tension Spring	1
10X56	Drive Cord Assembly	1
19X192	"C" Washer (Mtg. drive Shaft)	2
6X66	Rubber Grommet (Mtg. gang cond.)	3

TYPE G.I. 28A169 RECORD CHANGER PARTS

G.I.-56-76507	Motor Assembly, 60 cycles 105-125 Volts AC	1
E.V. No. 33-4	Crystal Cartridge with Needle	1
	Semi-Permanent Needle Only	1

(When ordering needles, specify part number and letter stamped on cartridge.)

©John F. Rider

Compliments of www.nucow.com

MODEL 05WG-2748D

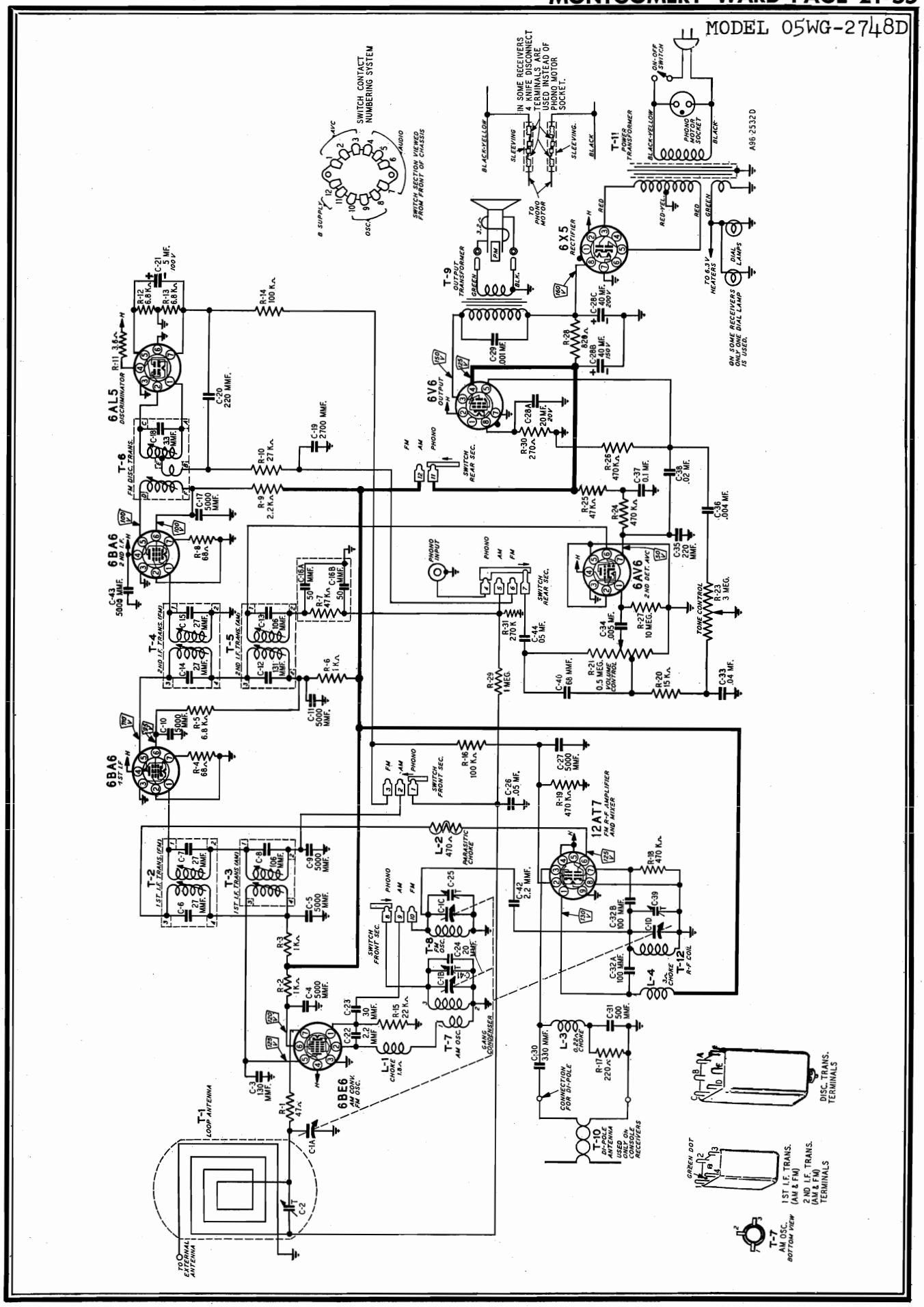

©John F. Rider

Compliments of www.nucow.com

MODEL 05WG-2748E

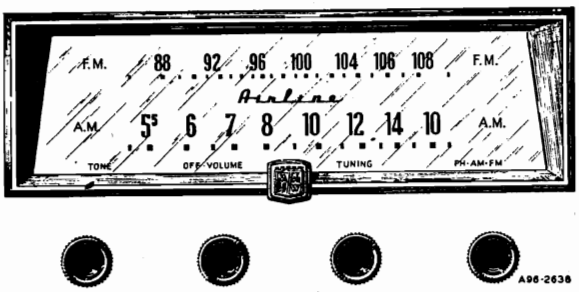

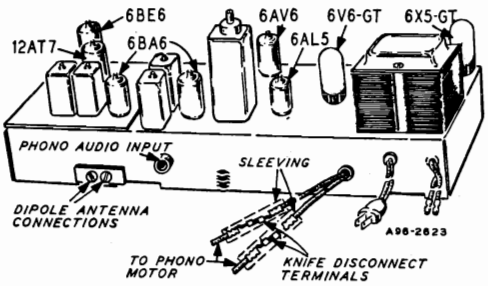

ELECTRICAL SPECIFICATIONS

Power Supply.....105-125 volts AC 60 cycles, 40 watts. 60 watts with record changer.

Frequency Ranges.....Broadcast 540-1600 KC
Frequency Modulation 88-108 MC

Intermediate Frequency....AM—455 KC
FM—10.7 MC

Selectivity.....AM—45 KC broad at 1000 times signal, measured at 1000 KC
I.F. FM—200 KC broad at 2 times down
I.F. FM—950 KC broad at 200 times down

AM Sensitivity.....(For .5 watt output with external antenna) 25 microvolts average

FM Sensitivity.....(For .5 watt output) 25 microvolts average

Power Output..... 1.9 watts maximum
0.8 watts 10% distortion

Loud Speaker.....10" PM Dynamic

Voice Coil Impedance.....3.2 ohms 400 cycles

Tube and Dial Lamp Complement

1 6BE6 AM Converter & FM Osc.
1 6BA6 1st I-F Amplifier
1 6BA6 2nd I-F Amplifier
1 6AL5 FM Discriminator
1 6AV6 Audio Amplifier, AM 2nd Detector and AVC
1 6V6GT Audio Output
1 6X5GT Rectifier
1 12AT7 R-F Amplifier & Mixer
2 No. 47 Dial Lamps

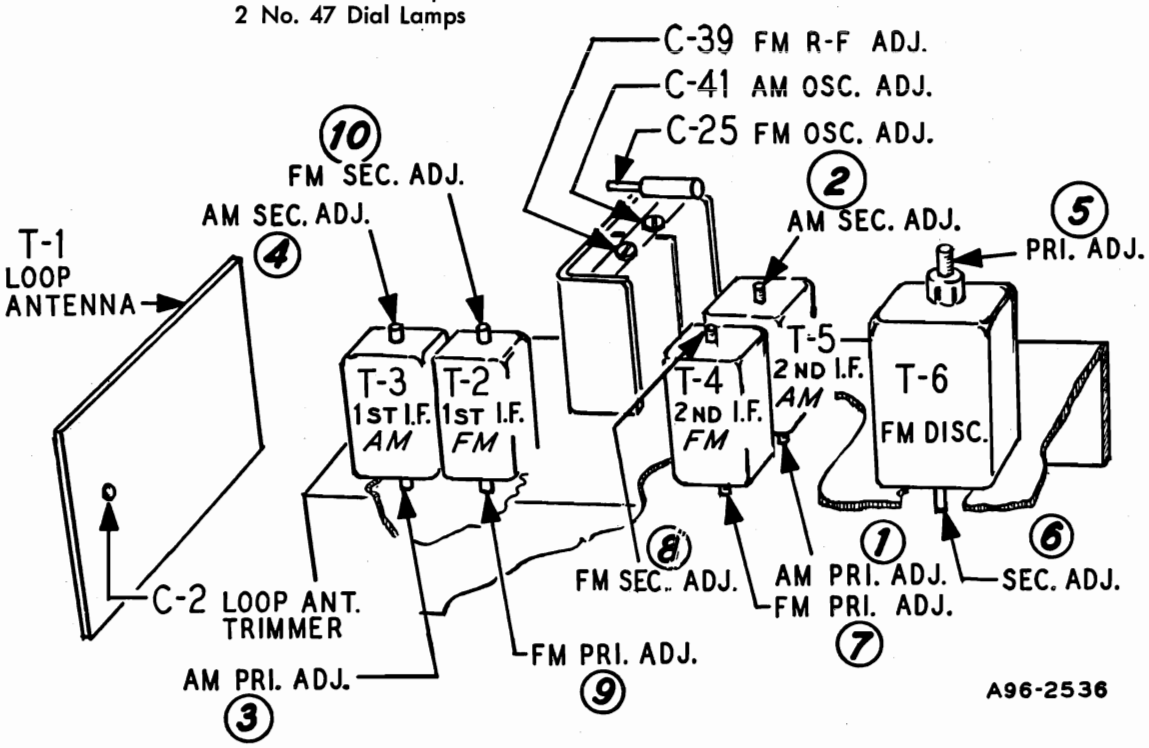

©John F. Rider

Compliments of www.nucow.com

MODEL 05WG-2748E

DRIVE CORD REPLACEMENT

DIAL POINTER CORD

Use a new 10X72 drive cord assembly or a new length of cord 44 inches long for the installation. Install the cord as shown in the illustration, winding three turns clockwise around the drive shaft with the turns progressing away from the chassis. After completing the installation rotate the drive shaft a few turns to take up the slack in the cord.

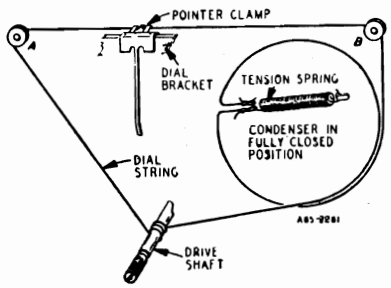

TUBE SOCKET VOLTAGES

Socket voltages are shown on the schematic diagram at the tube socket terminals. All voltages are between the socket terminal and chassis ground. Plate, screen and cathode voltages were taken with a 1000 ohm-per-volt meter with a 300 volt scale used for plate and screen voltages. Audio grid voltages were read with a vacuum tube volt-meter.

Conditions of measurement are:

Line voltage .....117 Volts AC
Signal Input .....None

A variation of ±10% is usually permissible.

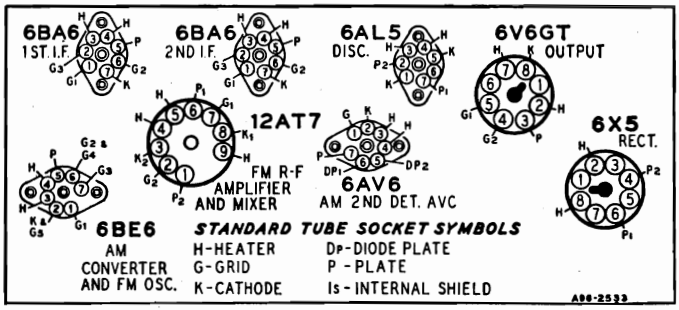

ALIGNMENT PROCEDURES

AM STAGES

The following is required for aligning:
An All Wave Signal Generator Which Will Provide an Accurately Calibrated Signal at the Test Frequencies as Listed.
Output Indicating Meter, Non-Metallic Screwdriver, Dummy Antennas — .1 mf, and 50mmf.

Volume Control Maximum all Adjustments.
Connect Radio Chassis to Ground Post of Signal Generator with a Short Heavy Lead.
Allow Chassis and Signal Generator to "Heat Up" for Several Minutes.

SIGNAL GENERATOR						
FREQUENCY SETTING	CONNECT GENERATOR OUTPUT TO	THROUGH DUMMY ANTENNA	CONNECT GROUND TO	GANG CONDENSER SETTING	ADJUST	ADJUST FOR
455 KC	Control Grid 1st 6BA6 Pin No. 1	.1 mf	Chassis Base	Rotor Fully Open	2nd I.F. Pri. (1) and Sec. (2)	Maximum Output
455 KC	Control Grid 6BE6 Pin No. 7 1st Det.	.1 mf	Chassis Base	Rotor Fully Open	1st I.F. Pri. (3) and Sec. (4)	Maximum Output
455 KC	Control Grid 6BE6 Pin No. 7	.1 mf	Chassis Base	Rotor Fully Open	2nd I-F Pri. (1) and Sec. (2)	Maximum Output
1620 KC	Control Grid 6BE6 Pin No. 7	.1 mf	Chassis Base	Rotor Fully Open	Oscillator C-41	Maximum Output
1400 KC	External Antenna Terminal	50 mmf	Chassis Base	Turn Rotor to Max. Output. Set Pointer to 1400 KC See Note A	Antenna C-2	Maximum Output

NOTE A—If the pointer is not at 1400 KC on the dial, reset pointer to the 1400 KC mark on the dial scale.

FM STAGES

The following is required for aligning:

An accurately calibrated signal generator providing unmodulated signals at the test frequencies listed below.

Non-metallic screwdriver.

Dummy Antennas and I-F Loading Resistor—2500 mmf, 300 ohms

Zero center scale DC vacuum tube voltmeter having a range of approximately 3 volts.
(If a zero center scale meter is not available, a standard scale vacuum tube voltmeter may be used by reversing the meter connections for negative readings).
Allow chassis and signal generator to "Heat Up" for several minutes.

©John F. Rider

Compliments of www.nucow.com

MODEL 05WG-2748E

SIGNAL GENERATOR	FREQUENCY SETTING	CONNECT GENERATOR OUTPUT TO	THROUGH DUMMY ANTENNA	BAND SWITCH SETTING	GANG CONDENSER SETTING	ADJUST	ADJUST FOR
Discriminator	10.7 MC	6BA6 2nd I-F Pin 1 and Chassis	2500 mmf	FM	Rotor Fully Open	Disc. Pri. (5) Note A	Maximum Deflection
	10.7 MC	6BA6 2nd I-F Pin 1 and Chassis	2500 mmf	FM	Rotor Fully Open	Disc. Sec. (6) Note B	
I-F	10.7 MC Note C	6BA6 1st I-F Pin 1 and Chassis	2500 mmf	FM	Rotor Fully Open	2nd I-F Pri. (7) Sec. (8) Note D	Maximum Deflection
Discriminator	10.7 MC	6BA6 1st I-F Pin 1 and Chassis	2500 mmf	FM	Rotor Fully Open	Disc. Pri. (5) Note D	Maximum Deflection
I-F	10.7 MC	Junction C-32A & B (Dual 100 mmf cond.) And chassis	2500 mmf	FM	Rotor Fully Open	1st I-F Pri. (9) & Sec. (10) 2nd I-F Pri. (7) & Sec. (8) Disc. Pri. (5) In Order Shown Note D	Maximum Deflection
	10.7 MC	Same as above	2500 mmf	FM	Rotor Fully Open	Disc. Sec. (6) Note B	
RECHECK I-F ADJUSTMENTS IN ORDER GIVEN							
Oscillator	108.5	Disconnect built-in dipole antenna and connect generator to dipole terminals with resistor in series.	300 ohms	FM	Rotor Fully Open	Osc. C-25	Maximum Deflection
Antenna	104.5	Same as above	300 ohms	FM	Tune rotor for max. AVC voltage	Ant. C-39	Maximum Deflection
RECHECK ANTENNA & OSC. ADJUSTMENTS IN ORDER GIVEN							

FM ALIGNMENT NOTES

NOTE A—The zero center scale DC vacuum tube voltmeter is to be connected between chassis ground and the AVC line. A signal of .1 volt must be fed into the receiver for this adjustment.
Note output voltage on the zero center DC vacuum tube voltmeter

NOTE B—Disconnect zero center DC vacuum tube voltmeter from AVC and connect it at the audio takeoff point at the 27 K ohm resistor (R-10) and its junction with the terminal strip. Adjust for zero voltage indication.

NOTE C—AM I-F coils must be aligned before attempting to align the FM I-F coils.

NOTE D—Connect zero center DC vacuum tube voltmeter as in Note A. Adjust input to give same output on the zero center DC vacuum tube voltmeter as in Note A.

Ref. No.	Part No.	Description	Qty. Used in Set
CAPACITORS			
C-1	14A209	Gang Condenser Assembly	1
C-2	17A235	2-24 mmf Trimmer	1
C-3	47X559	130 mmf Ceramic	1
C-4, C-5, C-9, C-10, C-11, C-17, C-27, C-43	47X507	5000 mmf Ceramic	8
C-6, C-7		Part of T-2 (1st I-F Trans. FM)	
C-8		Part of T-3 (1st I-F Trans. AM)	
C-12, C-13		Part of T-5 (2nd I-F Trans. AM)	
C-14, C-15		Part of T-4 (2nd I-F Trans. FM)	
C-16A, C-16B	47X112	50-50 mmf Dual Mica	1
C-18		Part of T-6 (Discriminator Trans.)	
C-19	47X492	2700 mmf Molded Mica	1
C-20, C-35	47X468	220 mmf Ceramic	2
C-21	45X361	5 mf 100 V Dry Electrolytic	1
C-22, C-42	47X557	2.2 mmf Ceramic	2
C-23	47X558	30 mmf Ceramic	1
C-24	47X516	20 mmf Ceramic	1
C-25	17A255	1-8 mmf Trimmer	1
C-26, C-44	B66503	.05 mf 200 V Tubular	2
C-28A, C-28B, C-28C	45X360	20 mf 20 V, 40 mf 150 V, 40 mf 200 V Dry Electrolytic	1
C-29	H66102	.001 mf 800 V Tubular	1
C-30	47X470	330 mmf Molded Mica	1
C-31	47X508	500 mmf Ceramic	1
C-32A, C-32B	76X4	100 mmf Dual Ceramic	1
C-33	B66403	.04 mf 200 V Tubular	1
C-34	D66502	.005 mf 400 V Tubular	1
C-36	B66103	.01 mf 200 V Tubular	1
C-37	D66104	.1 mf 400 V Tubular	1
C-38	D66203	.02 mf 400 V Tubular	1
C-39, C-41		Part of C-1 (Gang Condenser)	
C-40	47X471	68 mmf Ceramic	1

©John F. Rider

Compliments of www.nucow.com

MODEL 05WG-2748E

RESISTORS

Ref. No.	Part No.	Ohms	Watts	Description	Qty. Used in Set
R-1	B85470	47	0.5	Carbon	1
R-2, R-3, R-6, R-9	B85102	1000	0.5	Carbon	4
R-4, R-8	B84680	68	0.5	Carbon	2
R-5, R-12, R-13	B84682	6800	0.5	Carbon	3
R-7, R-25	B85473	47 K	0.5	Carbon	2
R-10	B85273	27 K	0.5	Carbon	1
R-11	43X233	3.6	0.5	Wirewound	1
R-14, R-16	B85104	100 K	0.5	Carbon	2
R-15	B85223	22 K	0.5	Carbon	1
R-17	B84221	220	0.5	Carbon	1
R-18, R-19, R-24, R-26	B85474	470 K	0.5	Carbon	4
R-20	B85153	15 K	0.5	Carbon	1
R-21	36X372	.5 meg.		Volume Control & Switch	1
R-23	40X310	.5 meg.		Tone Control	1
R-27	B85106	10 meg.	0.5	Carbon	1
R-28	D84821	820	2.0	Carbon	1
R-29	B85105	1 meg.	0.5	Carbon	1
R-30	B84271	270	0.5	Carbon	1
R-31	B84274	270 K	0.5	Carbon	1

TRANSFORMERS AND COILS

Ref. No.	Part No.	Description	Qty. Used in Set
L-1	35A5	Insulated Choke	1
L-2	9A2103	Parasitic Choke Assembly	1
L-3	35A9	Insulated Choke	1
L-4	35A8	Insulated Choke	1
T-1	9A2146	"B" Range Loop Antenna	1
T-2	9A2060	1st I-F Trans. (FM)	1
T-3	9A2062	1st I-F Trans. (AM)	1
T-4	9A2061	2nd I-F Trans. (FM)	1
T-5	9A2063	2nd I-F Trans. (AM)	1
T-6	9A2064	Discriminator Transformer	1
T-7	9A2065	Oscillator Coil (AM)	1
T-8	9A2067	Oscillator Coil (FM)	1
T-9	51X134	Output Transformer	1
T-10	9A2004	Dipole Antenna	1
T-11	53X291	Power Transformer	1
T-12	9A2066	Antenna Coil (FM)	1

MISCELLANEOUS

Ref. No.	Part No.	Description	Qty. Used in Set
	12A480	10" P.M. Speaker	1
	3A435	Tube Socket—Octal (8 prong) Molded	2
	3A426	Tube Socket (1st 6BA6)	1
	3A427	Tube Socket (6BE6)	1
	3A443	Tube Socket (12AT7)	1
	3A439	Tube Socket (Miniature)	3
	*3A304	Phono Motor Socket	1
	3A305	Phono Socket—Single Pin Tip	1
	2A393	Band Change Switch	1
	13X546	Line Cord and Plug Assembly	1
	4X1114	Escutcheon	1
	10A759	Knob	4

*In some receivers knife type connectors are used.

DIAL AND DRIVE ASSEMBLY

Part No.	Description	Qty. Used in Set
58X741	Dial Glass	1
24X446	Idler Pulley	2
15X251	Pointer	1
25X1650	Dial Bracket	1
7A103	No. 47 Pilot Light Bulb	2
7A199	Pilot Light Socket Assembly	1
26X486	Drive Shaft	1
41X88	Reflector, Dial Light	2
28X113	Drive Cord Tension Spring	1
10X72	Drive Cord Assembly	1
19X192	"C" Washer (Mtg. drive Shaft)	2
6X66	Rubber Grommet (Mtg. gang cond.)	3

TYPE G.I. 28A168 RECORD CHANGER PARTS

Part No.	Description	Qty. Used in Set
G.I.-56-76507	Motor Assembly, 60 cycles 105-125 Volts AC	1
G.I.-69-75506	Tone Arm	1
AST-LT3D	Crystal Cartridge & Needle Assembly	1
AST-4999-D	Needle, Regular	1
AST-4999-D-033	Needle, Microgroove	1

©John F. Rider

Compliments of www.nucow.com

MODEL 05WG-2748E

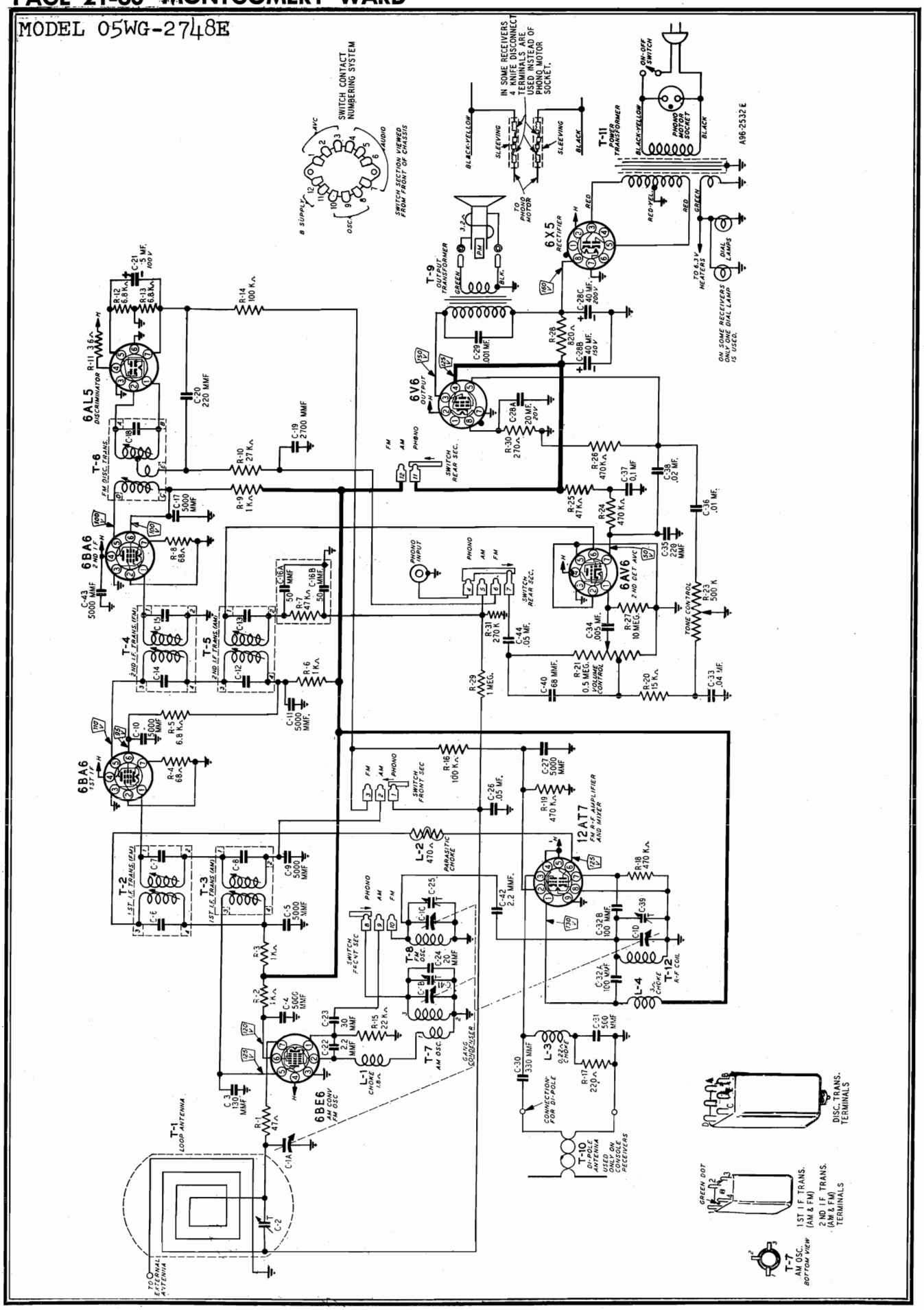

©John F. Rider

Compliments of www.nucow.com

MODELS 05WG-2751A,
05WG-2752B

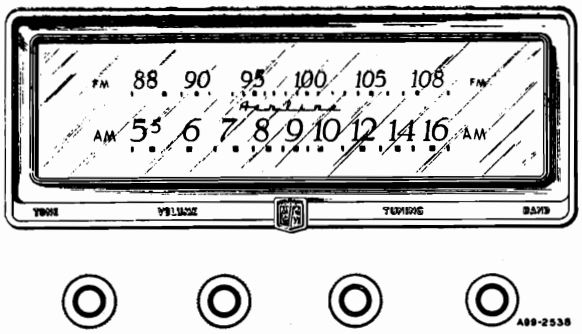

GENERAL DESCRIPTION

This is a two band, seven tube (plus rectifier tube) AM and FM receiver with automatic record changer. The I-F stages use high gain miniature type tubes. Built-in Air Wave Aerials are provided for the FM and Broadcast bands. Features include, a grounded grid R-F amplifier stage on the FM band, compensator circuits to prevent oscillator drift, automatic volume control, beam power output stage, PM dynamic loud speaker and an electrostatic shield in the power transformer to reduce power line noise.

The receiver and record changer are housed in a console combination cabinet with controls provided for tuning, volume, tone and band or phono selection.

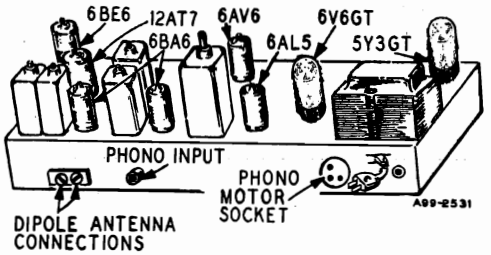

DRIVE CORD REPLACEMENT

DIAL POINTER CORD

Use a new 10X38 drive cord assembly or a new length of cord 48 inches long for the installation. Install the cord as shown in the illustration, winding three turns clockwise around the drive shaft with the turns progressing away from the chassis. After completing the installation rotate the drive shaft a few turns to take up the slack in the cord.

ELECTRICAL SPECIFICATIONS

Power Supply	105-125 volts AC 60 cycles, 60 watts. 80 watts with record changer.
Frequency Ranges	Broadcast 540-1600 KC Frequency Modulation 88-108 MC
Intermediate Frequency	AM—455KC FM—10.7 MC
Selectivity	AM—45 KC broad at 1000 times signal, measured at 1000 KC I.F. FM—200 KC broad at 2 times down I.F. FM—950 KC broad at 200 times down
AM Sensitivity	(For .5 watt output with external antenna) 25 microvolts average
FM Sensitivity	(For .5 watt output) 25 microvolts average
Power Output	4.5 watts maximum 2.5 watts 10% distortion
Loud Speaker	12" PM Dynamic
Voice Coil Impedance	3.2 ohms 400 cycles
Record Changer	See Manual 5089A

Tube and Dial Lamp Complement

1 6BE6 AM Converter & FM Osc.
1 6BA6 1st I-F Amplifier
1 6BA6 2nd I-F Amplifier
1 6AL5 FM Discriminator
1 6AV6 Audio Amplifier, AM 2nd Detector and AVC
1 6V6GT Audio Output
1 5Y3GT Rectifier
1 12AT7 R-F Amplifier & Mixer
2 No. 47 Dial Lamps

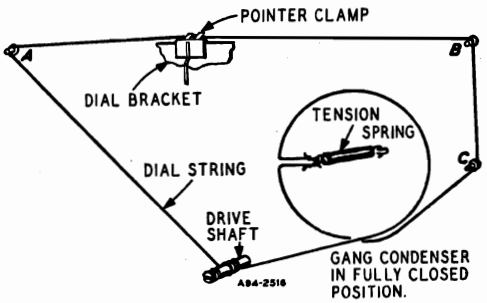

©John F. Rider

Compliments of www.nucow.com

MODELS 05WG-2751A,
05WG-2752B

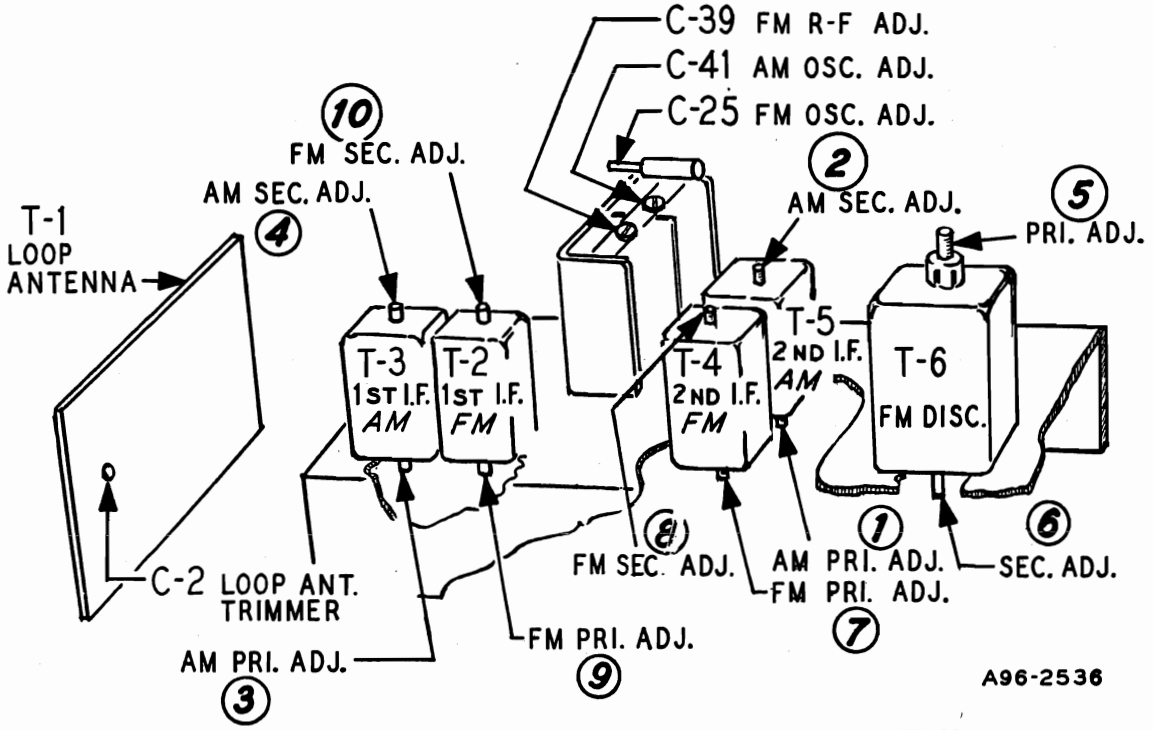

TUBE SOCKET VOLTAGES

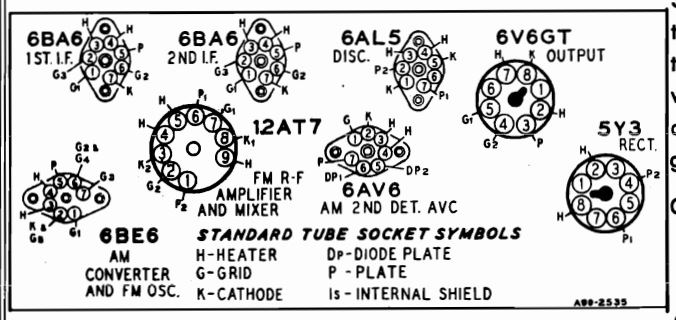

Socket voltages are shown on the schematic diagram at the tube socket terminals. All voltages are between the socket terminal and chassis ground. Plate, screen and cathode voltages were taken with a 1000 ohm-per-volt meter with a 300 volt scale used for plate and screen voltages. Audio grid voltages were read with a vacuum tube volt-meter.

Conditions of measurement are:

Line voltage.....117 Volts AC

Signal Input.....None

A variation of ±10% is usually permissible.

ALIGNMENT PROCEDURES

AM STAGES

The following is required for aligning:

An All Wave Signal Generator Which Will Provide an Accurately Calibrated Signal at the Test Frequencies as Listed.

Output Indicating Meter, Non-Metallic Screwdriver, Dummy Antennas — .1 mf, and 50mmf.

Volume Control Maximum all Adjustments.

Connect Radio Chassis to Ground Post of Signal Generator with a Short Heavy Lead.

Allow Chassis and Signal Generator to "Heat Up" for Several Minutes.

SIGNAL GENERATOR						
FREQUENCY SETTING	CONNECT GENERATOR OUTPUT TO	THROUGH DUMMY ANTENNA	CONNECT GROUND TO	GANG CONDENSER SETTING	ADJUST	ADJUST FOR
455 KC	Control Grid 1st 6BA6 Pin No. 1	.1 mf	Chassis Base	Rotor Fully Open	2nd I.F. Pri. (1) and Sec. (2)	Maximum Output
455 KC	Control Grid 6BE6 Pin No. 7 1st Det.	.1 mf	Chassis Base	Rotor Fully Open	1st I.F. Pri. (3) and Sec. (4)	Maximum Output
455 KC	Control Grid 6BE6 Pin No. 7	.1 mf	Chassis Base	Rotor Fully Open	2nd I-F Pri. (1) and Sec. (2)	Maximum Output
1620 KC	Control Grid 6BE6 Pin No. 7	.1 mf	Chassis Base	Rotor Fully Open	Oscillator C-41	Maximum Output
1400 KC	External Antenna Lead	50 mmf	Chassis Base	Turn Rotor to Max. Output. Set Pointer to 1400 KC See Note A	Antenna C-2	Maximum Output

NOTE A—If the pointer is not at 1400 KC on the dial, reset pointer to the 1400 KC mark on the dial scale

©John F. Rider

Compliments of www.nucow.com

MODELS 05WG-2751A, 05WG-2752B

FM STAGES

The following is required for aligning:

An accurately calibrated signal generator providing unmodulated signals at the test frequencies listed below.

Non-metallic screwdriver.

Dummy Antennas and I-F Loading Resistor—2500 mmf, 300 ohms

Zero center scale DC vacuum tube voltmeter having a range of approximately 3 volts.
(If a zero center scale meter is not available, a standard scale vacuum tube voltmeter may be used by reversing the meter connections for negative readings).
Allow chassis and signal generator to "Heat Up" for several minutes.

SIGNAL GENERATOR	FREQUENCY SETTING	CONNECT GENERATOR OUTPUT TO	THROUGH DUMMY ANTENNA	BAND SWITCH SETTING	GANG CONDENSER SETTING	ADJUST	ADJUST FOR
Discriminator	10.7 MC	6BA6 2nd I-F Pin 1 and Chassis	2500 mmf	FM	Rotor Fully Open	Disc. Pri. (5) Note A	Maximum Deflection
	10.7 MC	6BA6 2nd I-F Pin 1 and Chassis	2500 mmf	FM	Rotor Fully Open	Disc. Sec. (6) Note B	
I-F	10.7 MC Note C	6BA6 1st I-F Pin 1 and Chassis	2500 mmf	FM	Rotor Fully Open	2nd I-F Pri. (7) Sec. (8) Note D	Maximum Deflection
Discriminator	10.7 MC	6BA6 1st I-F Pin 1 and Chassis	2500 mmf	FM	Rotor Fully Open	Disc. Pri. (5) Note D	Maximum Deflection
I-F	10.7 MC	Junction C-32A & B (Dual 100 mmf cond.) And chassis	2500 mmf	FM	Rotor Fully Open	1st I-F Pri. (9) & Sec. (10) 2nd I-F Pri. (7) & Sec. (8) Disc. Pri. (5) In Order Shown Note D	Maximum Deflection
	10.7 MC	Same as above	2500 mmf	FM	Rotor Fully Open	Disc. Sec. (6) Note B	Maximum Deflection
RECHECK I-F ADJUSTMENTS IN ORDER GIVEN							
Oscillator	108.5	Disconnect built-in dipole antenna and connect generator to dipole terminals with resistor in series.	300 ohms	FM	Rotor Fully Open	Osc. C-25	Maximum Deflection
Antenna	104.5	Same as above	300 ohms	FM	Tune rotor for max AVC voltage	Ant. C-39	Maximum Deflection
RECHECK ANTENNA & OSC. ADJUSTMENTS IN ORDER GIVEN							

FM ALIGNMENT NOTES

NOTE A—The zero center scale DC vacuum tube voltmeter is to be connected between chassis ground and the AVC line. A signal of .1 volt must be fed into the receiver for this adjustment.
Note output voltage on the zero center DC vacuum tube voltmeter

NOTE B—Disconnect zero center DC vacuum tube voltmeter from AVC and connect it at the audio takeoff point at the 27 K ohm resistor (R-10) and its junction with the terminal strip. Adjust for zero voltage indication.

NOTE C—AM I-F coils must be aligned before attempting to align the FM I-F coils.

NOTE D—Connect zero center DC vacuum tube voltmeter as in Note A. Adjust input to give same output on the zero center DC vacuum tube voltmeter as in Note A.

REPLACEMENT PARTS INFORMATION

HOW TO ORDER PARTS—Should it be necessary to write us or to order any repair parts, it is important that the complete model number which appears on the label attached to the rear of the chassis be specified. Repair parts should be ordered from your nearest Wards Retail Store, Catalog Order office or Mail Order House.

REPLACEMENT PARTS LIST

Use only genuine factory tested parts to insure service jobs you can depend on and to obtain original set performance

Ref. No.	Part No.	Description	Qty. Used in Set
CAPACITORS			
C-1	14A209	Gang Condenser Assembly	1
C-2	17A256	2-24 mmf Trimmer	1
C-3	47X559	130 mmf Ceramic	1
C-4, C-5, C-9, C-10, C-11, C-17, C-27, C-43	47X507	5000 mmf Ceramic	8
C-6, C-7		Part of T-2 (1st I-F Trans. FM)	
C-8		Part of T-3 (1st I-F Trans. AM)	
C-12, C-13		Part of T-5 (2nd I-F Trans. AM)	
C-14, C-15		Part of T-4 (2nd I-F Trans. FM)	
C-16A, C-16B	47X112	50-50 mmf Dual Mica	1
C-18		Part of T-6 (Discriminator Trans.)	
C-19	47X492	2700 mmf Molded Mica	1
C-20, C-35	47X468	220 mmf Ceramic	2
C-21	45X361	5 mf 100 V Dry Electrolytic	1
C-22, C-42	47X557	2.2 mmf Ceramic	2

©John F. Rider

Compliments of www.nucow.com

MODELS 05WG-2751A, 05WG-2752B

REPLACEMENT PARTS LIST (continued)

Ref. No.	Part No.	Description	Qty. Used in Set
C-23	47X558	30 mmf Ceramic	1
C-24	47X516	20 mmf Ceramic	1
C-25	17A255	1-8 mmf Trimmer	1
C-26	B66503	.05 mf 200 V Tubular	1
C-28A, C-28B, C-28C, C-28D	45X359	20 mf 25 V; 20 mf 350 V; 40 mf 350 V; 40 mf 350 V Dry Electrolytic	1
C-29	H66102	.001 mf 800 V Tubular	1
C-30	47X470	330 mmf Molded Mica	1
C-31	47X508	500 mmf Ceramic	1
C-32A, C-32B	76X4	100 mmf Dual Ceramic	1
C-33	B66403	.04 mf 200 V Tubular	1
C-34	D66502	.005 mf 400 V Tubular	1
C-36	B66402	.004 mf 200 V Tubular	1
C-37	D66104	.1 mf 400 V Tubular	1
C-38	D66203	.02 mf 400 V Tubular	1
C-39, C-41		Part of C-1 (Gang Condenser)	
C-40	47X471	68 mmf Ceramic	1

RESISTORS

Ref. No.	Part No.	Ohms	Watts	Description	Qty. Used in Set
R-1	B85470	47	0.5	Carbon	1
R-2, R-3, R-6	B85102	1000	0.5	Carbon	3
R-4, R-8	B84680	68	0.5	Carbon	2
R-5, R-12, R-13	B84682	6800	0.5	Carbon	3
R-7, R-25	B85473	47 K	0.5	Carbon	2
R-9	B85222	2200	0.5	Carbon	1
R-10	B85273	27 K	0.5	Carbon	1
R-11	43X233	3.6	0.5	Wirewound	1
R-14, R-16	B85104	100 K	0.5	Carbon	2
R-15	B85223	22 K	0.5	Carbon	1
R-17	B84221	220	0.5	Carbon	1
R-18, R-19, R-24, R-26	B85474	470 K	0.5	Carbon	4
R-20	B85153	15 K	0.5	Carbon	1
R-21	36X372	.5 meg.		Volume Control & Switch	1
R-23	40X285	3 meg.		Tone Control	1
R-27	B85106	10 meg.	0.5	Carbon	1
R-28	D84821	820	2.0	Carbon	1
R-28A, R-28B	43X224	1000; 1400	4.0; 6.0	Wirewound	1
R-29	B85105	1 meg.	0.5	Carbon	1
R-30	B84271	270	0.5	Carbon	1
R-31	B85225	2.2 meg.	0.5	Carbon	1

TRANSFORMERS AND COILS

Ref. No.	Part No.	Description	Qty. Used in Set
L-1	35A5	Insulated Choke	1
L-2	9A2103	Parasitic Choke Assembly	1
L-3	35A9	Insulated Choke	1
L-4	35A8	Insulated Choke	1
T-1	9A1972	"B" Range Loop Antenna	1
T-2	9A2060	1st I-F Trans. (FM)	1
T-3	9A2062	1st I-F Trans. (AM)	1
T-4	9A2061	2nd I-F Trans. (FM)	1
T-5	9A2063	2nd I-F Trans. (AM)	1
T-6	9A2064	Discriminator Transformer	1
T-7	9A2065	Oscillator Coil (AM)	1
T-8	9A2067	Oscillator Coil (FM)	1
T-9	51X134	Output Transformer	1
T-10	9A2004	Dipole Antenna	1
T-11	53X290	Power Transformer	1
T-12	9A2066	Antenna Coil (FM)	1

MISCELLANEOUS

Part No.	Description	Qty. Used in Set
12A490	12" P.M. Speaker	1
3A435	Tube Socket—Octal (8 prong) Molded	2
3A426	Tube Socket (1st 6BA6)	1
3A427	Tube Socket (6BE6)	1
3A443	Tube Socket (12AT7)	1
3A439	Tube Socket (Miniature)	3
3A304	Phono Motor Socket	1
3A305	Phono Socket—Single Pin Tip	1
2A393	Band Change Switch	1
13X546	Line Cord and Plug Assembly	1
4X1049	Escutcheon (2752)	1
4X1088	Escutcheon (2751)	1
10A754	Knob (2752)	4
10A758	Knob (2751)	4

DIAL AND DRIVE ASSEMBLY

Part No.	Description	Qty. Used in Set
58X729	Dial Glass	1
24X446	Idler Pulley	2
15X251	Pointer	1
25X1616	Dial Bracket	1
7A103	No. 47 Pilot Light Bulb	2
7A199	Pilot Light Socket Assembly	1
26X486	Drive Shaft	1
41X88	Reflector, Dial Light	2
28X113	Drive Cord Tension Spring	1
10X38	Drive Cord Assembly	1
19X192	"C" Washer (Mtg. drive Shaft)	2
6X66	Rubber Grommet (Mtg. gang cond.)	3

TYPE G.I.-28A168 RECORD CHANGER PARTS

Part No.	Description	Qty. Used in Set
G.I.-56-76507	Motor Assembly, 60 cycles 105-125 Volts AC	1
AST-LT3D	Crystal Cartridge	1
	Needle, Regular	1
	Needle, Microgroove (Red)	1

(When ordering needles, specify part number and letter stamped on cartridge.)

©John F. Rider

Compliments of www.nucow.com

MODELS 05WG-2751A,
05WG-2752B

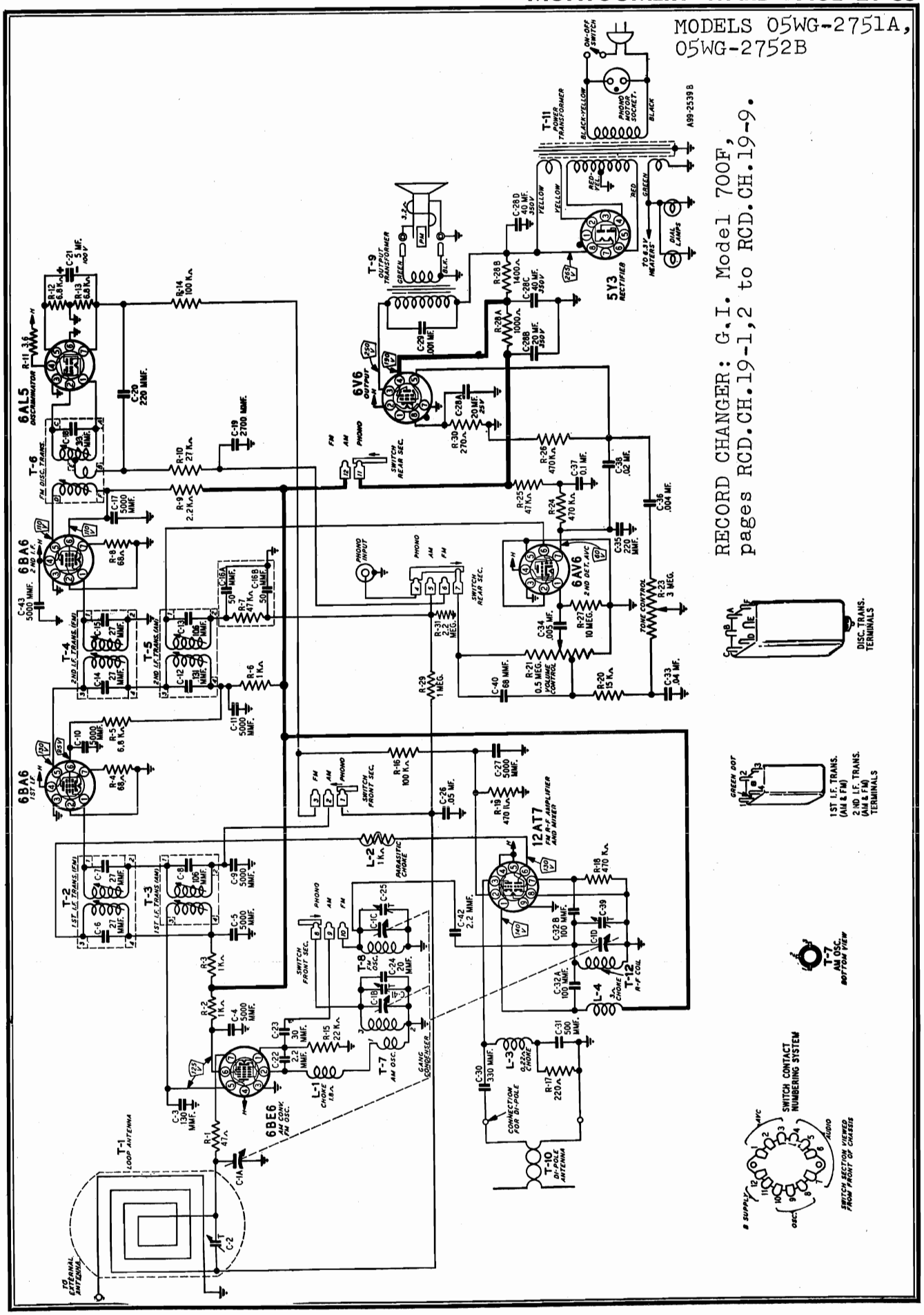

RECORD CHANGER: G.I. Model 700F,
pages RCD.CH.19-1,2 to RCD.CH.19-9.

©John F. Rider

Compliments of www.nucow.com

ELECTRICAL SPECIFICATIONS

Power Supply.....105-125 volts AC 60 cycles, 60 watts. 80 watts with record changer.

Frequency Ranges.....Broadcast 540-1600 KC
Frequency Modulation 88-108 MC

Intermediate Frequency....AM—455KC
FM—10.7 MC

Selectivity.....AM—45 KC broad at 1000 times signal, measured at 1000 KC
I.F. FM—200 KC broad at 2 times down
I.F. FM—950 KC broad at 200 times down

AM Sensitivity.....(For .5 watt output with external antenna) 15 microvolts average

FM Sensitivity.....(For .5 watt output)
25 microvolts average

Power Output..... 4.5 watts maximum
2.5 watts 10% distortion

Loud Speaker.....12" PM Dynamic

Voice Coil Impedance..... 3.2 ohms 400 cycles

Record Changer ..... See Manual No. 5081A.

Tube and Dial Lamp Complement
1 6BE6 AM Converter & FM Osc.
1 6BA6 1st I-F Amplifier
1 6BA6 2nd I-F Amplifier
1 6AL5 FM Discriminator
1 6AV6 Audio Amplifier, AM 2nd Detector and AVC
1 6V6GT Audio Output
1 5Y3GT Rectifier
1 12AT7 R-F Amplifier & Mixer
2 No. 47 Dial Lamps

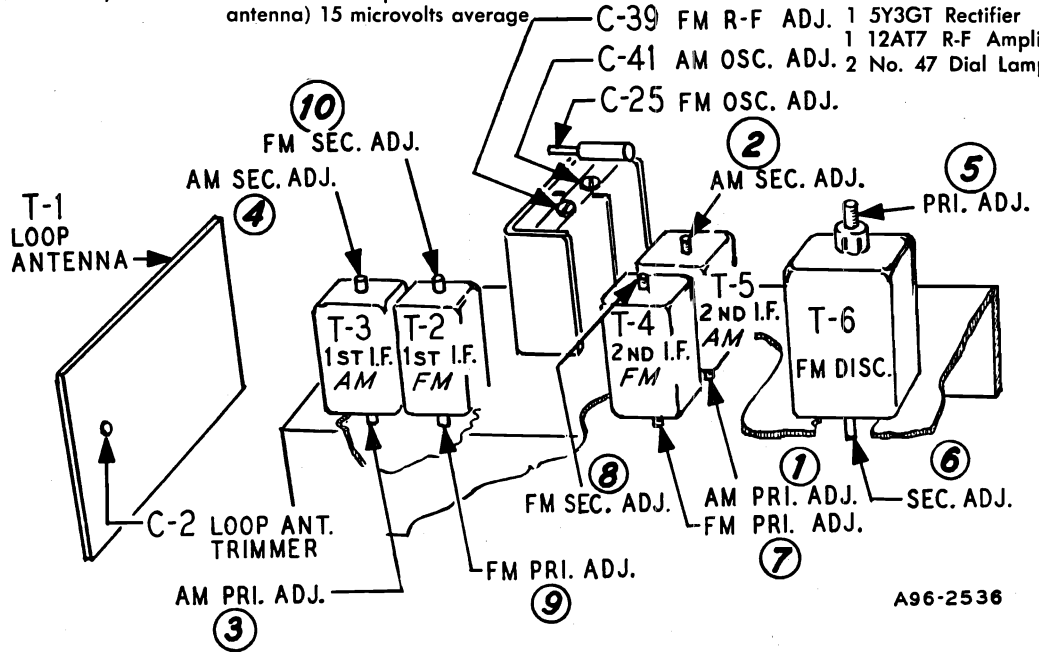

GENERAL DESCRIPTION

This is a two band, seven tube (plus rectifier tube) AM and FM receiver with automatic record changer. The I-F stages use high gain miniature type tubes. Built-in Air Wave Aerials are provided for the FM and Broadcast bands. Features include, a grounded grid R-F amplifier stage on the FM band, compensator circuits to prevent oscillator drift, automatic volume control, beam power output stage, PM dynamic loud speaker and an electrostatic shield in the power transformer to reduce power line noise.

The receiver and record changer are housed in a console combination cabinet with controls provided for tuning, volume, tone and band or phono selection.

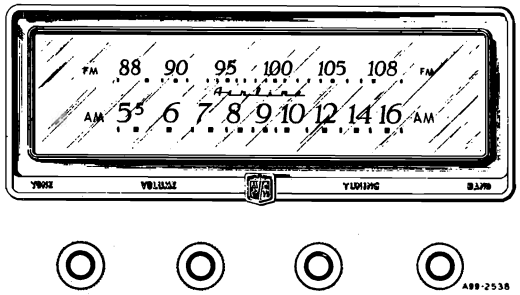

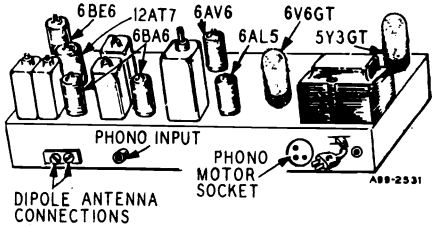

TUBE SOCKET VOLTAGES

Socket voltages are shown on the schematic diagram at the tube socket terminals. All voltages are between the socket terminal and chassis ground. Plate, screen and cathode voltages were taken with a 1000 ohm-per-volt meter with a 300 volt scale used for plate and screen voltages. Audio grid voltages were read with a vacuum tube volt-meter.

Conditions of measurement are:

Line voltage.....117 Volts AC

Signal Input.....None

A variation of ±10% is usually permissible.

©John F. Rider

Compliments of www.nucow.com

MODEL 05WG-2752

ALIGNMENT PROCEDURES

AM STAGES

The following is required for aligning:
An All Wave Signal Generator Which Will Provide an Accurately Calibrated Signal at the Test Frequencies as Listed.
Output Indicating Meter, Non-Metallic Screwdriver, Dummy Antennas — .1 mf, and 50mmf.

Volume Control Maximum all Adjustments.
Connect Radio Chassis to Ground Post of Signal Generator with a Short Heavy Lead.
Allow Chassis and Signal Generator to "Heat Up" for Several Minutes.

SIGNAL GENERATOR						
FREQUENCY SETTING	CONNECT GENERATOR OUTPUT TO	THROUGH DUMMY ANTENNA	CONNECT GROUND TO	GANG CONDENSER SETTING	ADJUST	ADJUST FOR
455 KC	Control Grid 1st 6BA6 Pin No. 1	.1 mf	Chassis Base	Rotor Fully Open	2nd I.F. Pri. (1) and Sec. (2)	Maximum Output
455 KC	Control Grid 6BE6 Pin No. 7 1st Det.	.1 mf	Chassis Base	Rotor Fully Open	1st I.F. Pri. (3) and Sec. (4)	Maximum Output
455 KC	Control Grid 6BE6 Pin No. 7	.1 mf	Chassis Base	Rotor Fully Open	2nd I-F Pri. (1) and Sec. (2)	Maximum Output
1620 KC	Control Grid 6BE6 Pin No. 7	.1 mf	Chassis Base	Rotor Fully Open	Oscillator C-41	Maximum Output
1400 KC	External Antenna Lead	50 mmf	Chassis Base	Turn Rotor to Max. Output. Set Pointer to 1400 KC See Note A	Antenna C-2	Maximum Output

NOTE A—If the pointer is not at 1400 KC on the dial, reset pointer to the 1400 KC mark on the dial scale.

FM STAGES

The following is required for aligning:
An accurately calibrated signal generator providing unmodulated signals at the test frequencies listed below.
Non-metallic screwdriver.
Dummy Antennas and I-F Loading Resistor—2500 mmf, 300 ohms

Zero center scale DC vacuum tube voltmeter having a range of approximately 3 volts.
(If a zero center scale meter is not available, a standard scale vacuum tube voltmeter may be used by reversing the meter connections for negative readings).
Allow chassis and signal generator to "Heat Up" for several minutes.

	SIGNAL GENERATOR						
	FREQUENCY SETTING	CONNECT GENERATOR OUTPUT TO	THROUGH DUMMY ANTENNA	BAND SWITCH SETTING	GANG CONDENSER SETTING	ADJUST	ADJUST FOR
Discriminator	10.7 MC	6BA6 2nd I-F Pin 1 and Chassis	2500 mmf	FM	Rotor Fully Open	Disc. Pri. (5) Note A	Maximum Deflection
	10.7 MC	6BA6 2nd I-F Pin 1 and Chassis	2500 mmf	FM	Rotor Fully Open	Disc. Sec. (6) Note B	
I-F	10.7 MC Note C	6BA6 1st I-F Pin 1 and Chassis	2500 mmf	FM	Rotor Fully Open	2nd I-F Pri. (7) Sec. (8) Note D	Maximum Deflection
Discriminator	10.7 MC	6BA6 1st I-F Pin 1 and Chassis	2500 mmf	FM	Rotor Fully Open	Disc. Pri. (5) Note D	Maximum Deflection
I-F	10.7 MC	Junction C-32A & B (Dual 100 mmf cond.) And chassis	2500 mmf	FM	Rotor Fully Open	1st I-F Pri. (9) & Sec. (10) 2nd I-F Pri. (7) & Sec. (8) Disc. Pri. (5) In Order Shown Note D	Maximum Deflection
	10.7 MC	Same as above	2500 mmf	FM	Rotor Fully Open	Disc. Sec. (6) Note B	Maximum Deflection
RECHECK I-F ADJUSTMENTS IN ORDER GIVEN							
Oscillator	108.5	Disconnect built-in dipole antenna and connect generator to dipole terminals with resistor in series.	300 ohms	FM	Rotor Fully Open	Osc. C-25	Maximum Deflection
Antenna	104.5	Same as above	300 ohms	FM	Tune rotor for max. AVC voltage	Ant. C-39	Maximum Deflection
RECHECK ANTENNA & OSC. ADJUSTMENTS IN ORDER GIVEN							

FM ALIGNMENT NOTES

NOTE A—The zero center scale DC vacuum tube voltmeter is to be connected between chassis ground and the AVC line. A signal of .1 volt must be fed into the receiver for this adjustment.
Note output voltage on the zero center DC vacuum tube voltmeter.

NOTE B—Disconnect zero center DC vacuum tube voltmeter from AVC and connect it at the audio takeoff point at the 27 K ohm resistor (R-10) and its junction with the terminal strip. Adjust for zero voltage indication.

NOTE C—AM I-F coils must be aligned before attempting to align the FM I-F coils.

NOTE D—Connect zero center DC vacuum tube voltmeter as in Note A. Adjust input to give same output on the zero center DC vacuum tube voltmeter as in Note A.

© John F. Rider

Compliments of www.nucow.com

MODEL 05WG-2752

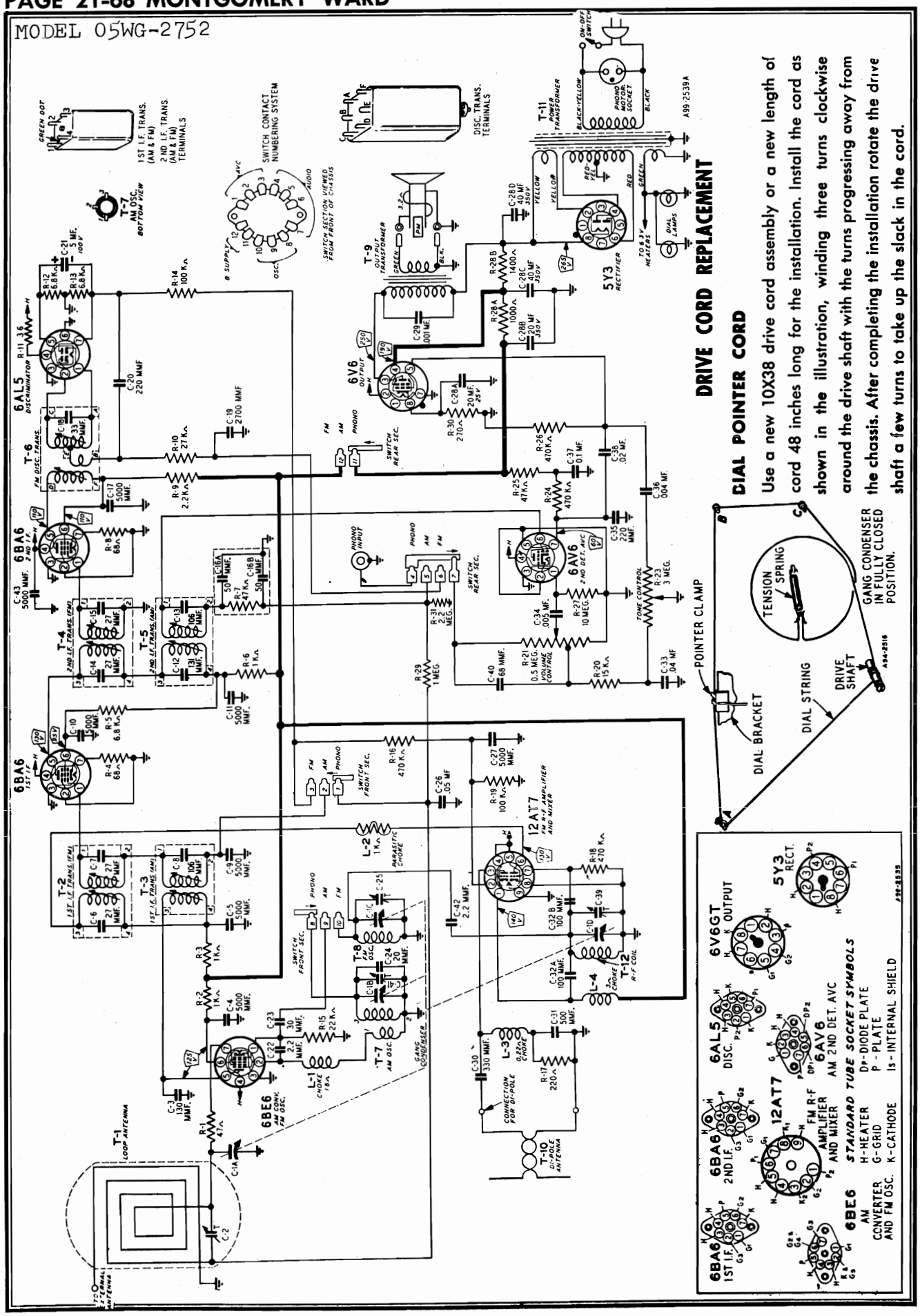

©John F. Rider

Compliments of www.nucow.com

REPLACEMENT PARTS

Ref. No.	Part No.	Description			Qty. Used in Set
CAPACITORS					
C-1	14A209	Gang Condenser Assembly			1
C-2	17A256	2-24 mmf		Trimmer	1
C-3	47X559	130 mmf		Ceramic	1
C-4, C-5, C-9, C-10, C-11, C-17, C-27, C-43	47X507	5000 mmf		Ceramic	8
C-6, C-7		Part of T-2 (Ist I-F Trans. FM)			
C-8		Part of T-3 (Ist I-F Trans. AM)			
C-12, C-13		Part of T-5 (2nd I-F Trans. AM)			
C-14, C-15		Part of T-4 (2nd I-F Trans. FM)			
C-16A, C-16B	47X112	50-50 mmf		Dual Mica	1
C-18		Part of T-6 (Discriminator Trans.)			
C-19	47X492	2700 mmf		Molded Mica	1
C-20, C-35	47X468	220 mmf		Ceramic	2
C-21	45X361	5 mf	100 V	Dry Electrolytic	1
C-22, C-42	47X557	2.2 mmf		Ceramic	2
C-23	47X558	30 mmf		Ceramic	1
C-24	47X516	20 mmf		Ceramic	1
C-25	17A255	1-8 mmf		Trimmer	1
C-26	B66503	.05 mf	200 V	Tubular	1
C-28A, C-28B, C-28C, C-28D	45X359	20 mf 20 mf 40 mf 40 mf	25 V 350 V 350 V 350 V	Dry Electrolytic	1
C-29	H66102	.001 mf	800 V	Tubular	1
C-30	47X470	330 mmf		Molded Mica	1
C-31	47X508	500 mmf		Ceramic	1
C-32A, C-32B	76X4	100 mmf		Dual Ceramic	1
C-33	B66403	.04 mf	200 V	Tubular	1
C-34	D66502	.005 mf	400 V	Tubular	1
C-36	B66402	.004 mf	200 V	Tubular	1
C-37	D66104	.1 mf	400 V	Tubular	1
C-38	D66203	.02 mf	400 V	Tubular	1
C-39, C-41		Part of C-1 (Gang Condenser)			
C-40	47X471	68 mmf		Ceramic	1

RESISTORS

Ref. No.	Part No.	Ohms	Watts	Description	Qty.
R-1	B85470	47	0.5	Carbon	1
R-2, R-3, R-6	B85102	1000	0.5	Carbon	3
R-4, R-8	B84680	68	0.5	Carbon	2
R-5, R-12, R-13	B84682	6800	0.5	Carbon	3
R-7, R-25	B85473	47 K	0.5	Carbon	2
R-9	B85222	2200	0.5	Carbon	1
R-10	B85273	27 K	0.5	Carbon	1
R-11	43X233	3.6	0.5	Wirewound	1
R-14, R-16	B85104	100 K	0.5	Carbon	2
R-15	B85223	22 K	0.5	Carbon	1
R-17	B84221	220	0.5	Carbon	1
R-18, R-19, R-24, R-26	B85474	470 K	0.5	Carbon	4
R-20	B85153	15 K	0.5	Carbon	1
R-21	36X372	.5 meg.		Volume Control & Switch	1
R-23	40X285	3 meg.		Tone Control	1
R-27	B85106	10 meg.	0.5	Carbon	1
R-28A, R-28B	43X224	1000 1400	4.0 6.0	Wirewound	1
R-29	B85105	1 meg.	0.5	Carbon	1
R-30	B84271	270	0.5	Carbon	1
R-31	B85225	2.2 meg.	0.5	Carbon	1

TRANSFORMERS AND COILS

Ref. No.	Part No.	Description	Qty.
L-1	35A5	Insulated Choke	1
L-2	9A2068	Parasitic Choke Assembly	1
L-3	35A9	Insulated Choke	1
L-4	35A8	Insulated Choke	1
T-1	9A1972	"B" Range Loop Antenna	1
T-2	9A2060	1st I-F Trans. (FM)	1
T-3	9A2062	1st I-F Trans. (AM)	1
T-4	9A2061	2nd I-F Trans. (FM)	1
T-5	9A2063	2nd I-F Trans. (AM)	1
T-6	9A2064	Discriminator Transformer	1
T-7	9A2065	Oscillator Coil (AM)	1
T-8	9A2067	Oscillator Coil (FM)	1
T-9	51X134	Output Transformer	1
T-10	9A2004	Dipole Antenna	1
T-11	53X290	Power Transformer	1
T-12	9A2066	Antenna Coil (FM)	1

MISCELLANEOUS

Part No.	Description	Qty.
12A490	12" P.M. Speaker	1
3A303	Tube Socket—Octal (8 prong) Molded	2
3A426	Tube Socket—Miniature	4
3A427	Tube Socket (12AT7)	1
3A443	Tube Socket (6BE6)	1
3A304	Phono Motor Socket	1
3A305	Phono Socket—Single Pin Tip	1
2A393	Band Change Switch	1
13X546	Line Cord and Plug Assembly	1
4X1049	Escutcheon	1
10A754	Knob	4

DIAL AND DRIVE ASSEMBLY

Part No.	Description	Qty.
58X729	Dial Glass	1
24X446	Idler Pulley	2
15X251	Pointer	1
25X1616	Dial Bracket	1
7A103	No. 47 Pilot Light Bulb	2
7A199	Pilot Light Socket Assembly	1
26X486	Drive Shaft	1
41X26	Reflector, Dial Light	2
28X113	Drive Cord Tension Spring	1
10X38	Drive Cord Assembly	1
19X192	"C" Washer (Mtg. drive Shaft)	2
6X66	Rubber Grommet (Mtg. gang cond.)	3

TYPE V-28A166 RECORD CHANGER PARTS

Part No.	Description	Qty.
V-2727B	Motor Assembly, 60 cycles 105-125 Volts AC	1
Shure P-81	Crystal Cartridge	1
	Semi-Permanent Needle	1

(When ordering needles, specify part number and letter stamped on cartridge.)

©John F. Rider

Compliments of www.nucow.com

MODEL 84GWM-1058A

SERVICE DATA

DESCRIPTION

This receiver is a single band four tube superhetrodyne designed for operation on AC-DC current or from batteries. It has a selenium rectifier for use on AC current. It is equipped with a loop antenna and incorporates an automatic volume control circuit.

SPECIFICATIONS

Power Supply.....105, 125 volt AC-DC or Batteries
Batteries.....Five 1 ½ volt "A" Airline No. 23
.....One 67 ½ volt "B" Airline No. 43
Tuning Range .....540 to 1610 KC
I.F. Frequency.....455 KC
Loud Speaker.....4 inch P.M.
Voice Coil Impedence.....3.2 ohms at 400 cycles
Power Output.....Maximum 100 milliwatts

Tube Complement

1R5—Oscillator Converter
1U4—I.F. Amplifier
1S5—AVC, Detector, 1st Audio
3V4—Power Output

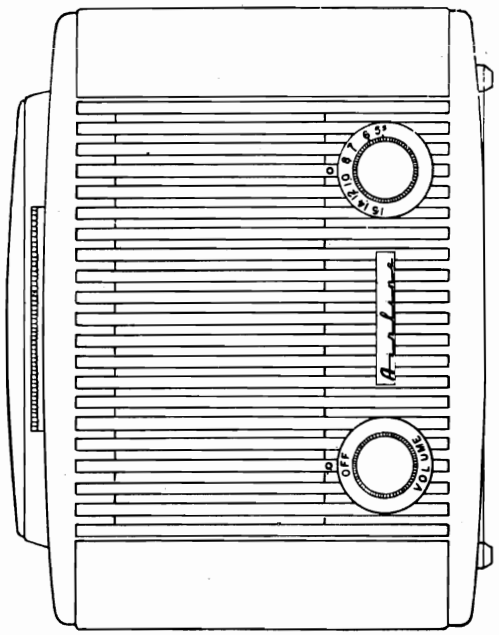

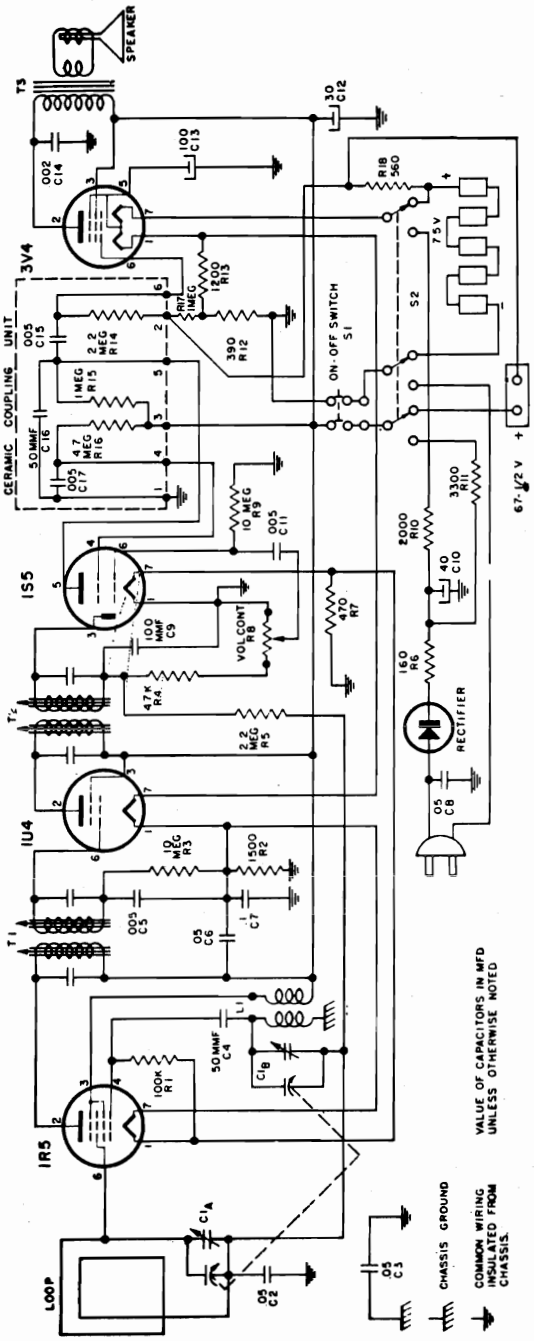

©John F. Rider

Compliments of www.nucow.com

MODEL 84GWM-1058A

ALIGNMENT INSTRUCTIONS

The following equipment is necessary for proper alignment:

Signal generator that will provide the test freauencies as listed.

Output meter.

Non-metallic screwdriver.

Dummy antenna—.1 mfd.

Volume control—Maximum: all adjustments.

Connect ground lead of signal generator to common negative.

Connect dummy antenna in series with output lead of signal generator.

Connect output meter across voice coil of speaker.

ALIGNMENT PROCEDURE

Position of Variable	Generator Frequency	Dummy Ant. Mfd.	Generator Connections	Trimmer Adjustment	Adjust Trimmer for	Trimmer Function
Fully open	455 KC	.1	*1R5 Grid (Stator of C1A)	T2	Maximum	Output I.F.
Fully open	455 KC	.1	*1R5 Grid (Stator of C1A)	T1	Maximum	Input I.F.
Fully open	1610 KC	.1	*1R5 Grid (Stator of C1A)	C1B	Maximum	Oscillator
Tune in signal from generator	1400 KC	—	Loosely coupled to loop	C1A	Maximum	Antenna

*Connect ground lead of signal generator to common negative.

RECEIVER STAGE SENSITIVITIES

The table below lists the sensitivity at the input of each stage. The receiver should be tuned to 1000 KC for all readings. All measurements are based on an output of 50 milliwatts. This may be measured by disconnecting the speaker voice coil and substituting a 3.2 ohm 5 watt resistor across the secondary winding of the output transformer. A reading of .4 volt across this resistor will be equivalent to a 50 milliwatt output. The volume control must be set to maximum. The signal source must be an accurately calibrated signal generator capable of supplying both 1000 KC and 455 KC signals modulated 30% with a 400 cycle audio signal. Variations in sensitivity of plus or minus 25% are usually permissible.

SIGNAL GENERATOR

Freq.	Coupling Condenser	Connection to Receiver	Ground Connection	INPUT FOR 50 MILLIWATT OUTPUT
1000 kc	.1 mfd	1R5 Mixer Pin 6	Common Negative	150 microvolts
455 kc	.1 mfd	1R5 Mixer Pin 6	Common Negative	120 microvolts
455 kc	.1 mfd	1U4 IF Amp. Pin 6	Common Negative	4000 microvolts
400 cycles	.1 mfd	1S5 2nd Det. Pin 6	Common Negative	.028 volts
400 cycles	.1 mfd	3V4 Output Pin 6	Common Negative	2.8 volts

©John F. Rider

Compliments of www.nucow.com

MODEL 84GWM-1058A

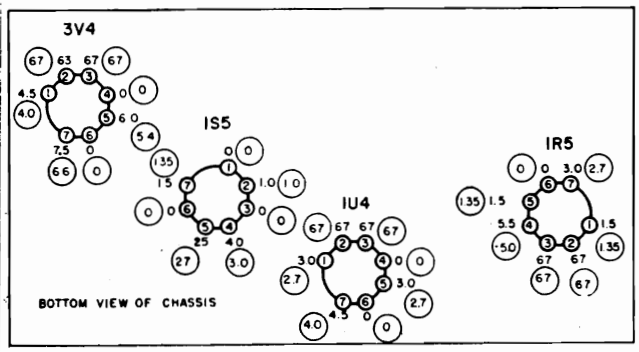

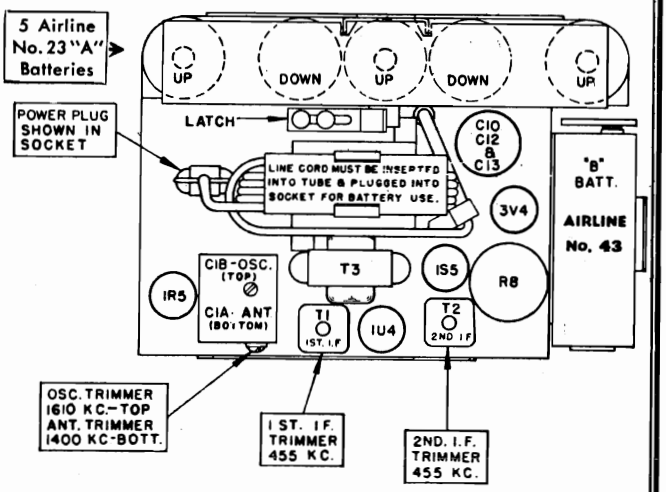

All voltages are measured from tube pin to common negative with a 20,000 ohm per volt voltmeter.

Voltages shown in circles are obtained when set is operated on 117 volt current.

Voltages shown outside the circles are obtained when the set is operated on batteries. New batteries in good condition should be used for these measurements.

REPLACEMENT PARTS LIST

Circuit Diagram Reference	Part No.	Description
		CONDENSERS
C1A, C1B	B19-197	Variable condenser
C2, C6	A16-152	.05 MFD 200 volt condenser
C3	A16-158	.05 MFD 400 volt condenser
C4	A15-175	50 MMF mica condenser
C5, C11	A16-153	.005 MFD 600 volt condenser
C7	A16-157	.1 MFD 200 volt condenser
C8	A16-189	.05 MFD 400 volt condenser
C9	A15-188	100 MMF mica condenser
C10	A18-290	40 MFD 150 volt electrolytic condenser
C12		30 MFD 150 volt electrolytic condenser
C13		100 MFD 10 volt electrolytic condenser
C14	A16-182	.002 MFD 200 volt condenser
C15	*A17-100	.005 MFD — See Note Below
C16		50 MMF — See Note Below
C17		.005 MFD — See Note Below
		RESISTORS
R1	A60-671	100K ohm ½ watt 20% resistor
R2	A60-680	1500 ohm ½ watt 10% resistor
R3, R9	A60-663	10 megohm ½ watt 20% resistor
R4	A60-685	47K ohm ½ watt 20% resistor
R5	A60-684	2.2 megohm ½ watt 20% resistor
R6	A60-725	160 ohm 5 watt 10% resistor
R7	A60-722	470 ohm ½ watt 10% resistor
R8	A24-178	Volume control, with switch
R10	A60-757	2000 ohm 10 watt 10% resistor
R11	A60-724	3300 ohm 1 watt, 10% resistor
R12	A60-665	390 ohm ½ watt 10% resistor
R13	A60-756	1200 ohm ½ watt 10% resistor
R14	*A17-100	2.2 megohm — See Note Below
R15		1 megohm — See Note Below
R16		4.7 megohm — See Note Below

Circuit Diagram Reference	Part No.	Description
		COILS
L1	A10-514	Oscillator coil
T1, T2	C10-475	1st and 2nd I.F. transformer
T3	B80-245	Output transformer
		MISCELLANEOUS
	B83-586	Baffle, speaker
	A11-322	Bracket, handle, mounting
	S84-242	Bracket, "A" battery retainer
	A72-32	Bushing, thimble, chassis mounting
	D42-448	Cabinet, (includes back cover)
		Cover, Back for Cabinet
	S84-257	Chassis Cover Assembly
	A83-421	Clip, I.F. transformer mounting
	B98-9	Grille Cloth
	C83-585	Handle, molded
	C52-278	Knob, dial
	C52-277	Knob, tuning
	C52-276	Knob, volume
	A83-568	Rectifier, selenium
	A71-38	Retainer, paper tube, for line cord
	A68-35	Socket, tube
	B79-367	Speaker, 4" P.M.
	A70-141	Spring, compression for handle
S2	A69-182	Switch AC-DC battery
	A76-49	Terminal for "B" battery
	B82-58	Loop Antenna

*NOTE: C15, C16, C17, R14, R15, R16, are contained in the Ceramic Coupling Unit, Part No. A17-100.

©John F. Rider

Compliments of www.nucow.com

MODELS BKO-A, CT8-A, GM9T-A, HNO, ILOT, PC9-A, Ch. 10A

GENERAL INFORMATION

TYPE - Chassis 10A is a universal, push-button tuned, automotive type, superheterodyne chassis, used in Motorola Models CT8-A, GM9T-A, BKO-A, PC9-A, HNO, ILOT, etc. An external speaker is used.

TUNING RANGE - 535 to 1600 Kc IF - 455 Kc

TUBE COMPLEMENT - 6BA6 - RF Amplifier
6BE6 - Converter
6BA6 - IF Amplifier
6AT6 - Det AVC & 1st AF Amp
6AQ5 - Power Amplifier
6X4 - Rectifier

POWER INPUT - 6.8 amps at 6.3V DC

POWER OUTPUT - 3 watts (max.)

PUSH BUTTON TUNER - Automatic Tuner AT-58. For complete service information on this tuner, refer to Motorola AT-58 Service Manual.

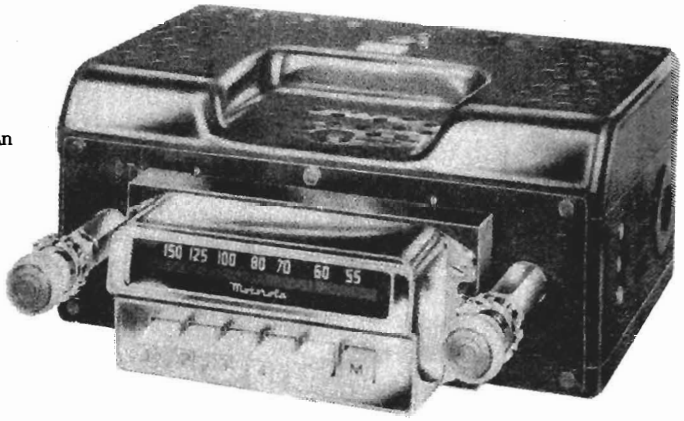

Typical Auto Receiver Using 10A Chassis
(Model CT8-A Illustrated)

NOTE:

This manual contains a complete list of replacement parts for the 10A chassis. Replacement parts for specific receivers in which the 10A chassis is used, will be found in separate service manuals bearing the appropriate receiver model numbers.

TO SET THE PUSH BUTTONS

1. Turn radio ON and allow it to warm up for a few minutes.
2. Push the number '1' button in as far as it will go and HOLD IT THAT WAY.
3. With the tuning knob, tune in the station you desire to set up. Tune carefully until you are exactly on the station; tuning to either side of it will result in poor tone quality. Release button and knob after tuning-in station.
4. Follow above steps 2 and 3 for the remaining four buttons.

ALIGNMENT

Expose alignment adjustment screws as follows: Remove the top and bottom covers; replace front plate screws to hold front plate in position after making sure that the plastic idler gear engages gear on tuner. On some models it will also be necessary to remove the escutcheon and escutcheon spacer.

Connect a PM speaker (3.2 ohm VC) to VC and GND terminals and connect a low range output meter across voice coil.

Connect a 6 volt storage battery to GND (or chassis) and BAT terminals of receiver; turn receiver on and allow it to warm up for a few minutes. Set receiver volume control at maximum. Push 'M' button (far enough so it will lock in) to place tuner in manual position.

For greatest accuracy, keep output of receiver at approximately 1 watt (1 watt = 1.79 volts on output meter) throughout alignment by reducing generator output as stages are brought into alignment. Use a small fibre screwdriver when aligning IF and diode transformers. A special tool, Motorola Part Number 66A76278, is required for adjusting the tuner cores. IMPORTANT: Do not push in on the alignment tool when adjusting the tuner cores; the slightest inward pressure may move the tuner carriage and result in inaccurate alignment.

Construct a dummy antenna as shown in Fig. 1.

POINTER ADJUSTMENT. The pointer can be moved slightly for calibration correction by turning the eccentric adjustment rivet. This rivet has a slotted head and is exposed only when tuner is tuned to high frequency end. See Figure 1 for its location.

©John F. Rider

Compliments of www.nucow.com

MODELS BKO-A, CT8-A, GM9T-A,
HNO, ILOT, PC9-A, Ch. 10A

ALIGNMENT CHART

STEP	DUMMY ANTENNA	GENERATOR CONNECTION	GENERATOR FREQUENCY	TUNER SET TO	ADJUST	REMARKS
IF ALIGNMENT						
1.	.1 mf	6BE6 grid (pin #7) & chassis	455 Kc	High frequency end-(cores out)	1, 2, 3 & 4	Peak for maximum in order indicated. Check by repeating step.
RF ALIGNMENT						
2.	See Fig. 1	Ant receptacle thru dummy	1610 Kc	High frequency end; cores should project 1-1/8" from cans. (Screw out if necessary)	5, 6 & 7	Peak for maximum in order indicated.
3.	"	"	1425 Kc	1425 Kc-Per Fig. 1	8, 9 & 10	Peak for maximum in order indicated.
4.	"	"	Turn generator power off.	'Osc Pad' Adj per Fig. 1	11	Peak oscillator padder for maximum noise. See*

5. When receiver is installed in car, extend antenna fully, set dial to approximately 1400 Kc and repeak antenna trimmer (7) for maximum volume of a weak station or noise between stations.

* If padder core (11) must be moved more than 1/2 turn from its original position, repeat steps 2, 3 & 4 until it is necessary to move the padder core less than 1/2 turn in this step.

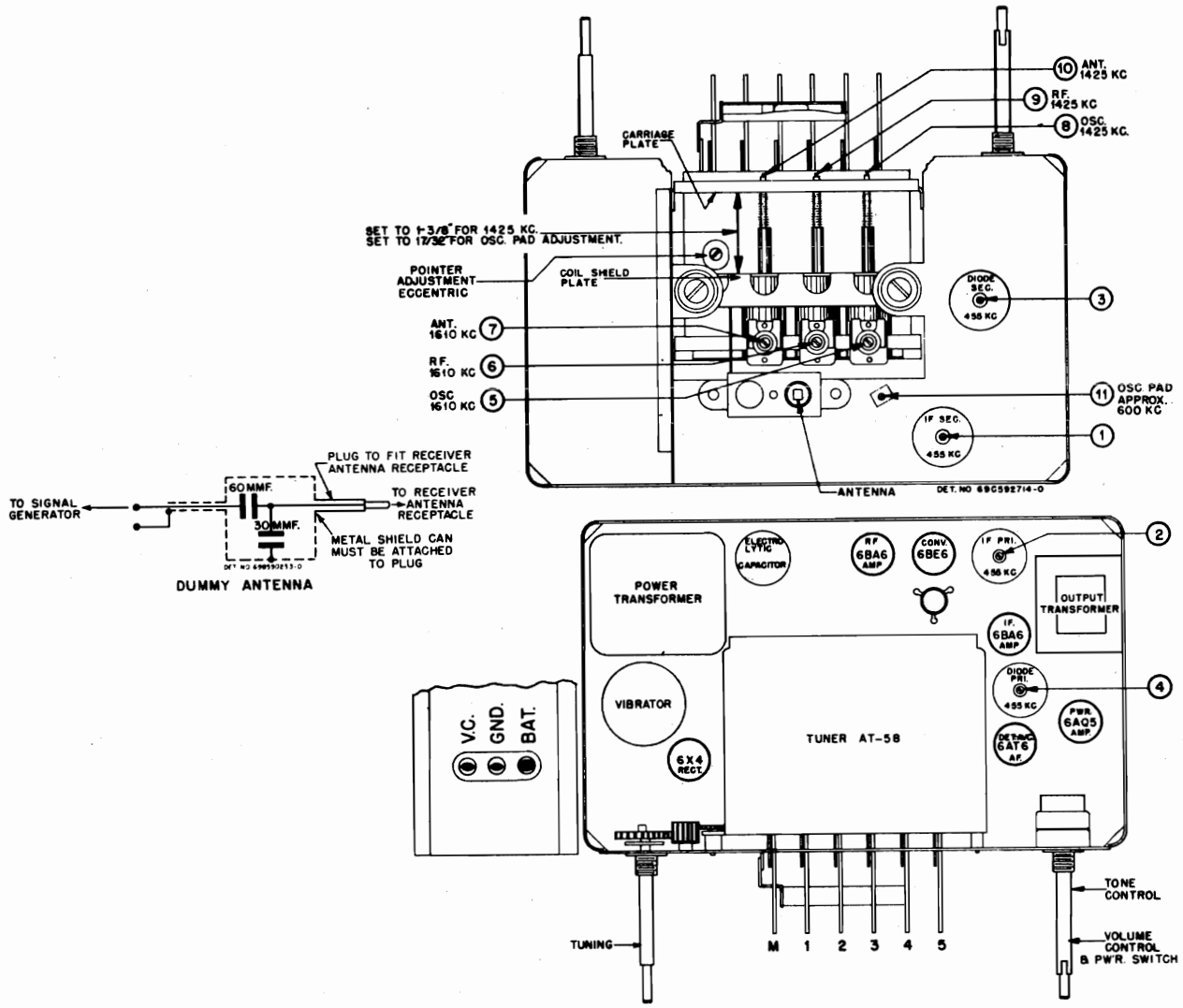

FIGURE 1. TUBE & TRIMMER LOCATIONS AND DUMMY ANTENNA

©John F. Rider

Compliments of www.nucow.com

MODELS BKO-A, CT8-A, GM9T-A, HNO, ILOT, PC9-A, Ch. 10A

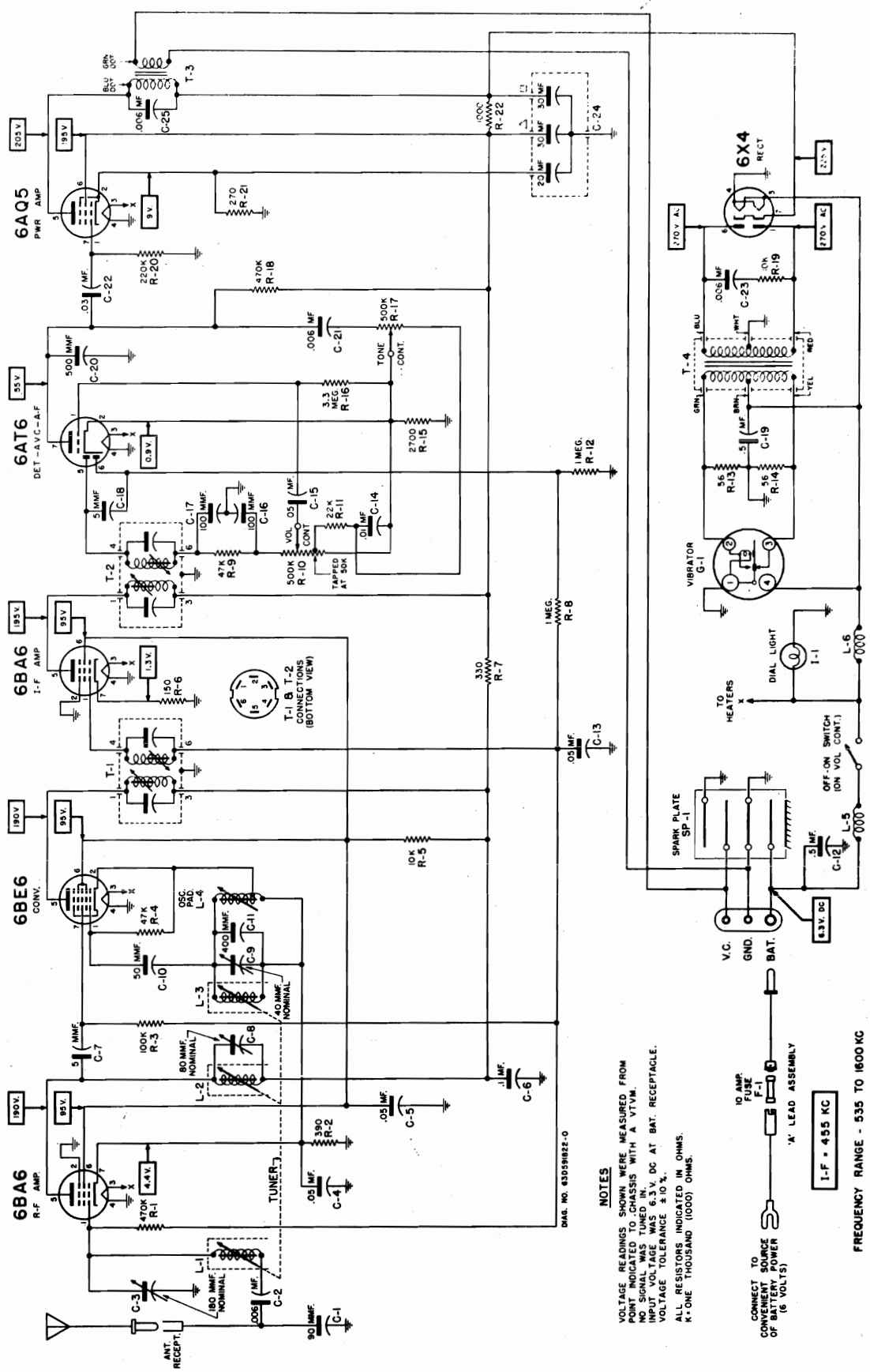

FIGURE 2. SCHEMATIC DIAGRAM

©John F. Rider

Compliments of www.nucow.com

MODELS BKO-A, CT8-A, GM9T-A,
HNO, ILOT, PC9-A, Ch. 10A

REPLACEMENT PARTS LIST

REF. NO.	PART NO.	DESCRIPTION
CHASSIS PARTS - ELECTRICAL		
CAPACITORS		
C-1	21B591682	Ceramic: 90 mmf 500V
C-2	8A4529	Paper: .006 mf 100V
C-3	20A480600	Trimmer, variable: mica; 50 to 280 mmf; on *same bracket as C-8 and C-9
C-4	8R13514	Paper: .05 mf 100V
C-5	8R14791	Paper: .05 mf 400V
C-6	8R13166	Paper: .1 mf 400V
C-7	21K70720	Molded: 5 mmf 500V
C-8	20A480600	Trimmer, variable: mica; 50 to 180 mmf; on same bracket as C-3 and C-9
C-9	20A480600	Trimmer, variable: mica; 30 to 60 mmf; on same bracket as C-3 and C-8
C-10	21R6513	Mica: 50 mmf 300V
C-11	21A71872	Ceramic: 400 mmf 5% 500V
C-12	8K17028	Paper: .5 mf 100V
C-13	8R13514	Paper: .05 mf 100V
C-14	8R472754	Paper: .01 mf 100V
C-15	8R13514	Paper: .05 mf 100V
C-16	21B77562	Paper: 100 mmf 500V
C-17	21B77562	Paper: 100 mmf 500V
C-18	21K70720	Molded: 5 mmf 500V
C-19	8K17028	Paper: .5 mf 100V
C-20	21R6639	Mica: 500 mmf 500V 20%
C-21	8K71910	Paper: .006 mf 400V
C-22	8R71911	Paper: .03 mf 400V
C-23	8K12840	Paper: .006 mf 1600V
C-24	23A473015	Electrolytic: 30-30-20 mf/350-300-25V
C-25	8K71910	Paper: .006 mf 400V
FUSE		
F-1	65A10266	Fuse: 10 amp; 3AG
VIBRATOR		
G-1	48B3333	Vibrator, non-sync: 4-pin
DIAL LIGHT		
I-1	65X10867	Bulb: 6.3V; .25A; bayonet base; clear
COILS		
L-1,2	24B71881	RF and Antenna (specify color of paint dot on old coil when ordering)
L-3	24B71879	Oscillator (specify color of paint dot on old coil when ordering)
L-4	24B70227	Oscillator Padder: complete with iron core
L-5	24K591605	Choke, RF
L-6	24A472535	Choke, hash
RESISTORS		
Note:		All resistors are carbon insulated type unless otherwise specified.
R-1	6R6032	470,000 20% 1/2W
R-2	6R5554	390 10% 1/2W
R-3	6R6075	100,000 20% 1/2W
R-4	6R6056	47,000 20% 1/2W
R-5	6R476060	10,000 20% 2W
R-6	6R3992	150 20% 1/2W
R-7	6R6010	330 20% 1/2W
R-8	6R6004	1 meg 20% 1/2W
R-9	6R6056	47,000 20% 1/2W
R-10	18A591550	Volume Control: 500,000; tapped at 50,000 (dual - also includes tone control R-17)
R-11	6R6028	22,000 20% 1/2W
R-12	6R6004	1 meg 20% 1/2W
R-13	6R5614	56 10% 1/2W
R-14	6R5614	56 10% 1/2W
R-15	6R5577	2700 10% 1/2W
R-16	6R2118	3.3 meg 20% 1/2W
R-17		Tone Control: See volume control R-10
R-18	6R6032	470,000 20% 1/2W
R-19	6R6054	10,000 20% 1/2W
R-20	6R6015	220,000 20% 1/2W
R-21	6R6336	270 10% 1W
R-22	6R476004	1000 20% 2W
SPARK PLATE		
SP-1	1A472606	Spark Plate Assembly
TRANSFORMERS		
T-1,2	24B485670	IF and Diode, 455 Kc: complete with padding capacitors and tuning cores but less shield
T-3	25B70171	Output Transformer
T-4	25B472533	Power Transformer
TUNER		
	1X472770	AT-58 Automatic Tuner (see Service Manual Motorola Part No. 54P480955 for complete breakdown)

PART NUMBER	DESCRIPTION
CHASSIS PARTS - MECHANICAL	
7A472580	Bracket, antenna receptacle mtg
42A4215	Clip, vibrator grounding
15C472596	Cover, bottom
15K591601	Cover, top
4A51289	Cupwasher (tuner mtg)
37A12949	Grommet, rubber (tuner mtg)
4S7671	Lockwasher, split: #8; cad pl (tuner mtg)
29R5239	Lug, soldering
1X70646	Receptacle, antenna
5S7771	Rivet: .088 x 3/16; stl; nkl pl (tube socket and soldering lug mtg)
5S7706	Rivet: .122 x 1/8; stl; nkl pl (term strip mtg)
5S7707	Rivet: .122 x 5/32; stl; nkl pl (ant receptacle, tuner shield, hash shield and output trans mtg)
5S7701	Rivet: .122 x 3/16; stl; nkl pl (vib socket mtg)
5S7751	Rivet: .122 x 1/4; stl; antique copper finish (spark plate mtg)
3S7454	Screw, sheet metal: #8 x 1/4; PKZ plain hex head; stl; cad pl (pilot light socket mtg).
3S7475	Screw, sheet metal: #8 x 1/4; PKZ slotted acorn head; stl; cad pl (housing screws)
3S7154	Screw, machine: 8-32 x 1/4 slotted binderhead; stl; cad pl (tuner mtg)
3S3397	Screw, sheet metal: #8 x 5/16; PKZ plain hex head; stl; cad pl (pwr trans mtg)
1X473150	Shield Assembly, light
26A472560	Shield, hash
26K485936	Shield, coil (for T-1 and T-2)
26A472602	Shield, tuner
9A472905	Socket, pilot light: includes brackets
9A70208	Socket, tube: 4-pin; with grounding lug (vibrator socket)
9A472534	Socket, tube: miniature; 7-prong
9A580002	Socket, tube: miniature; 7-prong (for 6AQ5 tube).
31C490140	Strip, terminal: 1 insulated lug, #1 mtg
31K86126	Strip, terminal: 2 insulated lugs, #2 mtg
31A472574	Strip, terminal: 4 insulated lugs, #4 mtg
39A26068	Wiper, grounding

©John F. Rider

Compliments of www.nucow.com

MODEL CTO,
Chevrolet

GENERAL INFORMATION

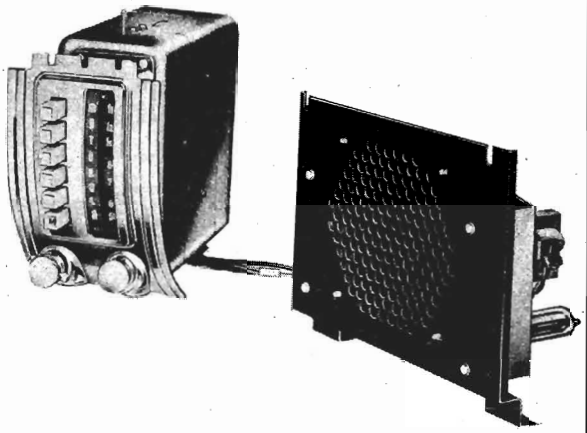

TYPE - Automotive type superheterodyne receiver specifically designed to fit the 1950 and 1949 Chevrolet. Receiver consists of two units; the RF tuner and the Power & Audio Unit.

TUNING RANGE - 535 to 1600 Kc

IF - 455 Kc

TUBE COMPLEMENT - 6BA6 - RF Amplifier
6BE6 - Converter
6BA6 - IF Amplifier
6AT6 - Diode detector, AVC & 1st AF Amp
6AQ5 - Power Amplifier
6X4 - Rectifier

POWER INPUT - 6.8 amps at 6.3V DC

POWER OUTPUT - 3 watts (max)

PUSH BUTTON TUNER - Automatic Tuner AT-71

ALIGNMENT

EQUIPMENT REQUIRED

1. A special tool for adjusting the tuner cores. Use Alignment Tool, Motorola Part No. 66A76278.

2. A small screwdriver for IF & RF alignment.

3. An accurately calibrated AM modulated signal generator.

4. A low range output meter.

5. A special dummy antenna for RF alignment. Construct dummy antenna as shown in Figure 1. The 21" coaxial lead needed in its construction is the same type as used for lead-in on Motorola car antennas.

PROCEDURE

1. Expose the alignment screws as follows: remove escutcheon, dial background and rear cover.

2. Connect the power & audio unit to the tuner unit and connect the output meter across the voice coil.

3. Connect a 6 volt storage battery to the power & audio unit chassis and 'A' lead. Turn on the receiver and allow it to warm up a few minutes. Set the receiver volume control at maximum and the tone control on 'high'.

4. For greatest accuracy, keep the output of the receiver at approximately 1 watt (1 watt = 1.79 volts on output meter) throughout alignment by reducing generator output (not receiver volume control) as stages are brought into alignment.

5. IF & RF ALIGNMENT - See Alignment Chart & Fig. 1
IMPORTANT: Do not push in on the alignment tool when adjusting the tuner cores. The slightest inward pressure on the alignment tool may move the tuner carriage and result in inaccurate alignment.

6. ANTENNA TRIMMER ADJUSTMENT. Once alignment has been satisfactorily performed, no further adjustment of any alignment screws should be made except to align the antenna trimmer (7) to the antenna after receiver is installed in car. This adjustment should be made with the antenna fully extended and receiver set to approximately 1400 Kc. Peak the trimmer for maximum volume of a weak station or background noise between stations. Trimmer can be reached from front by removing the top push button.

7. POINTER ADJUSTMENT. The pointer can be moved slightly for calibration correction by turning the eccentric adjustment rivet. This rivet has a slotted head and is exposed only when tuner is tuned to high frequency end. See Figure 1 for its location.

©John F. Rider

Compliments of www.nucow.com

MODEL CTO,
Chevrolet

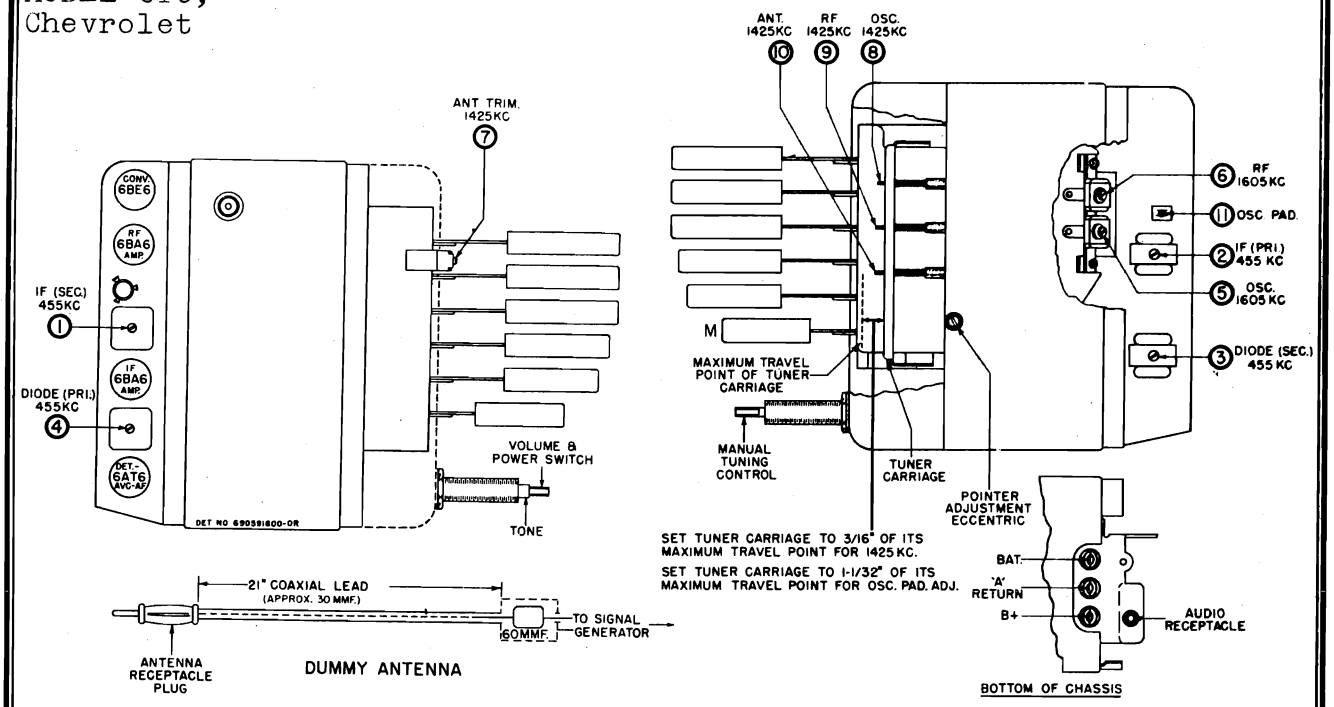

FIGURE 1. TUBE & TRIMMER LOCATIONS

ALIGNMENT CHART

STEP	TUNER SET TO	DUMMY ANTENNA	SIGNAL GENERATOR CONNECTED TO	SIGNAL GENERATOR FREQUENCY	ADJUST	REMARKS
1.	High frequency end (cores out)	.1 mf	Hi side -6BE6 grid (pin #7) Lo side -chassis.	455 Kc	1, 2, 3 & 4	Peak for maximum in order indicated. Check by repeating procedure.
2.	High frequency end; Core screws should project 5/16" from core adjustment clip	Special -See Fig. 1	Ant. receptacle through special dummy.	1605 Kc	5, 6, & 7	Peak for maximum in order indicated.
3.	Using manual knob, set tuner to extreme HF position, then move carriage inward 3/16" (see 'Measurements', Fig. 1)	Special -See Fig. 1	Ant. receptacle through special dummy.	1425 Kc	8, 9 & 10	Peak for max. in order indicated.
4.	Move carriage 1-1/32" inward from point of maximum travel	Special -See Fig. 1	Ant. receptacle through special dummy.	Turn generator power off.	11	Peak oscillator padder for maximum noise. See*
5.	Approx. 1400 Kc	-	-		7	With set installed in car, peak antenna trimmer for maximum noise or volume of a weak station. Car antenna should be fully extended.

* If padder core (11) must be moved more than 1/2 turn from its original position, repeat steps 2, 3 & 4 until it is necessary to move the padder core less than 1/2 turn in this step.

©John F. Rider

Compliments of www.nucow.com

MODEL CTO, Chevrolet

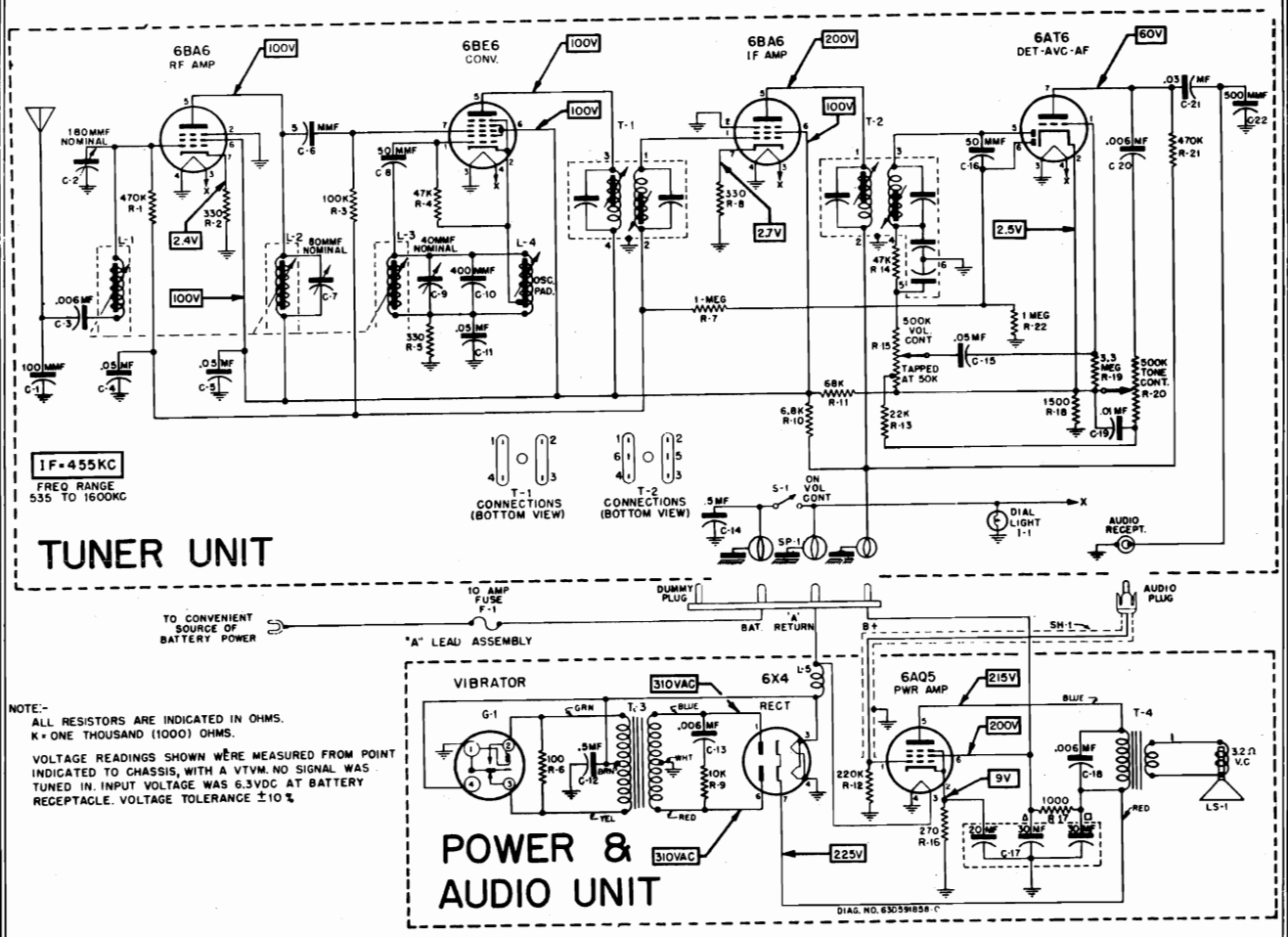

NOTE:-
ALL RESISTORS ARE INDICATED IN OHMS.
K = ONE THOUSAND (1000) OHMS.

VOLTAGE READINGS SHOWN WERE MEASURED FROM POINT INDICATED TO CHASSIS, WITH A VTVM. NO SIGNAL WAS TUNED IN. INPUT VOLTAGE WAS 6.3VDC AT BATTERY RECEPTACLE. VOLTAGE TOLERANCE ±10%

FIGURE 2. SCHEMATIC DIAGRAM

REPLACEMENT PARTS LIST

REF. NO.	PART NO.	DESCRIPTION
TUNER UNIT - ELECTRICAL PARTS		
CAPACITORS		
C-1	21B77562	Ceramic: 100 mmf 500V
C-2	20A590629	Trimmer, variable mica: 50-220 mmf; with brkt
C-3	8C4529	Paper: .006 mf 100V
C-4	8K13514	Paper: .05 mf 100V
C-5	8K14791	Paper: .05 mf 400V
C-6	21K70720	Ceramic: 5 mmf 500V
C-7	20A590639	Trimmer, variable mica: 20-180 mmf; includes C-9 and brkt
C-8	21K74661	Ceramic: 50 mmf 300V
or	21R6513	Mica: 50 mmf 300V
C-9	20A590639	Trimmer, variable mica: 5-80 mmf; includes C-7 & brkt
C-10	21A71872	Ceramic: 400 mmf 5% 500V
C-11	8K13514	Paper: .05 mf 100V
C-14	8K17028	Paper: .5 mf 100V
C-15	8K13514	Paper: .05 mf 100V
C-16	21K74661	Ceramic: 50 mmf 300V
C-19	8R472754	Paper: .01 mf 100V
C-20	8C4529	Paper: .006 mf 100V
C-21	8K71911	Paper: .03 mf 400V
C-22	21K481377	Ceramic: 500 mmf 500V
DIAL LIGHT		
I-1	65X10867	Bulb: 6.3V; .25A; bayonet base; clear #44
COILS		
L-1	24B71881*	RF & Antenna coil (specify color of paint dot on old coil when ordering)
L-2	24B71881*	RF & Antenna coil (specify color of paint dot on old coil when ordering)
L-3	24B71879*	Oscillator coil (specify color of paint dot on old coil when ordering)
L-4	24A70227	Oscillator padder coil: complete with iron tuning core
RESISTORS		Note: All resistors are insulated carbon type, unless otherwise specified.
R-1	6R6032	470,000 20% 1/2W
R-2	6R6010	330 20% 1/2W
R-3	6R6075	100,000 20% 1/2W
R-4	6R6056	47,000 20% 1/2W
R-5	6R6010	330 20% 1/2W
R-7	6R6004	1 meg 20% 1/2W
R-8	6R6010	330 20% 1/2W
R-10	6R6287	6800 20% 1W N.I.
R-11	6R6001	68,000 20% 1/2W
R-13	6R6028	22,000 20% 1/2W
R-14	6R6056	47,000 20% 1/2W
R-15	18B590604	Volume Control: 500,000 ohms; tapped at 50,000 ohms (includes tone control R-20 and switch S-1)
R-18	6R6161	1500 20% 1/2W
R-19	6R2118	3.3 meg 20% 1/2W
R-20		500,000 ohm tone control (part of vol cont).
R-21	6R6032	470,000 20% 1/2W
R-22	6R6004	1 meg 20% 1/2W
SWITCH		
S-1		Switch (Part of Volume Control)
SPARK PLATE		
SP-1	1A590637	Spark Plate Assembly

*Part of Tuner AT-71

©John F. Rider

Compliments of www.nucow.com

MODEL CTO,
Chevrolet

REF. NO.	PART NO.	DESCRIPTION
TRANSFORMERS		
T-1	24B485553	IF, 455 Kc: complete with padding capacitors and tuning cores
T-2	24K485555	Diode, 455 Kc: complete with padding capacitors and tuning core
TUNER		
1X590784	AT-71	Automatic Tuner
POWER & AUDIO UNIT - ELECTRICAL PARTS		
CAPACITORS		
C-12	8K17028	Paper: .5 mf 100V
C-13	8K12840	Paper: .006 mf 1600V
C-17	23A473015	Electrolytic: 30-30-20 mf/350-300-25V
C-18	8K71910	Paper: .006 mf 400V
FUSE		
F-1	65A10266	Fuse, 10 amp: type 3AG
VIBRATOR		
G-1	48B3333	Vibrator, non-sync: 4-pin
COILS		
L-5	24A472535	Choke, hash
SPEAKER		
LS-1	50K590681	Speaker: 6" PM; 3.2 ohm VC
RESISTORS		
Note:		All resistors are insulated carbon type unless otherwise specified.
R-6	6R6415	100 10% 1 watt
R-9	6R6054	10,000 20% 1/2W
R-12	6R6015	220,000 20% 1/2W
R-16	6R6336	270 10% 1 watt
R-17	6R6184	1000 20% 1 watt N.I.
TRANSFORMERS		
T-3	25K590650	Power transformer
T-4	25B590648	Output transformer

PART NUMBER	DESCRIPTION
TUNER UNIT - CHASSIS MECHANICAL PARTS	
43A590605	Bushing, tuning shaft
42A485548	Clip, coil can mounting (T-1 & T-2)
2S8397	Nut, hex: 1/2-28 x 5/8 stl; cad pl (volume control and tuning control bushings mtg)
1X590785	Pointer and Sleeve Assembly
1X590794	Receptacle, antenna input: includes bracket and terminal strip
9A54664	Receptacle, 1-pin (audio input)
5S7771	Rivet: .088 x 3/16; stl; nkl pl (tube socket mtg)
5S7706	Rivet: .122 x 1/8 stl; pol nkl (terminal strip mtg)
5S7701	Rivet: .122 x 3/16; stl; pol nkl (audio receptacle mtg)
3S7205	Screw, machine: 8-32 x 1/4; slotted hex head; locking type; stl; cad pl(automatic tuner mtg)
3S7454	Screw, sheet metal: #8 x 1/4 PKZ plain hex head; stl; cad pl (variable cap brkt, antenna receptacle brkt, and pilot lamp brkt mtg)
26A473011	Shield, light
9A472905	Socket, pilot light & brkt
9A472534	Socket, tube: miniature; 7-prong
9K580218	Socket, tube: miniature; 8-prong
31K490141	Strip, terminal: 1 ins lug, #2 mtg (part of antenna receptacle brkt)
31K490143	Strip, terminal: 2 ins lugs, #2 mtg
1K590623	Tuning Shaft and Gear Assembly
4A21577	Washer, 'C' (tuning shaft mtg)
4S490351	Washer, flat: 11/16 x .515 x .033 thick; stl; cad pl (tuning shaft bushing and volume control mtg)
4A580282	Washer, spring (tuning shaft mtg)

PART NUMBER	DESCRIPTION
TUNER UNIT HOUSING PARTS	
7B590696	Background, dial
1X590783	Cover, front: includes gear mounting stud
15D590615	Cover, rear
13K590702	Escutcheon, dial
7B590693	Frame, dial retaining
44B472872	Gear, idler (mounted on front cover)
2S8397	Nut, hex: 1/2-28 x 5/8 stl; cad pl (tuner bushing mtg)
34C590802	Scale, dial
3S7156	Screw, machine: 6-32 x 3/16 slotted binderhead; stl; cad pl (dial retaining frame mtg)
3S7205	Screw, machine: 8-32 x 1/4 slotted hex head; stl; cad pl (shell housing)
3S7475	Screw, sheet metal: #8 x 1/4 plain acorn head; stl; cad pl (front cover and rear cover mtg)
3S7454	Screw, sheet metal: #8 x 1/4 PKZ plain hex head; stl; cad pl (front cover mtg)
15D590600	Shell, housing
46A590602	Stud, idler gear mtg
4K73809	Washer, 'C' (idler gear mtg)
4S490351	Washer: 11/16 x .515 x .033 thick; stl; cad pl (tuner bushing mtg)
POWER & AUDIO UNIT - CHASSIS MECHANICAL PARTS	
42A4215	Clip, vibrator grounding
14A590633	Insulator, armite (used on 4- pin connector)
14K590653	Insulator, armite (cable insulator)
1X590689	Lead Assembly, 'A': includes fuse & fuse receptacle, 4-pin connector and insulator
1X590691	Lead Assembly, audio: includes plug
4S7666	Lockwasher, ext: #6; stl; cad pl (power trans mtg)
2S7005	Nut, hex: 6-32 x 1/4; stl; cad pl (power trans mtg)
64C590641	Plate, speaker mtg
28K71775	Plug, 1-pin (audio plug)
28A590611	Plug, 4-pin ('A' lead connector)
9B591314	Receptacle, fuse (complete)
5S7769	Rivet: .088 x 3/32 stl; pol nkl (connector plug insulator mtg)
5S7771	Rivet: .088 x 3/16; stl; pol nkl (miniature socket mtg)
5S7701	Rivet: .122 x 3/16; stl; pol nkl (vibrator socket and output trans mtg)
5S7707	Rivet: .122 x 5/32; stl; pol nkl (terminal strip mtg)
3S7475	Screw, sheet metal: #8 x 1/4 PKZ slotted acorn head; stl; cad pl (spkr plate mtg)
3S8176	Screw, sheet metal: #10 x 3/8 PKZ plain hex head; stl; cad pl (spkr mtg)
9A472534	Socket, tube: miniature; 7-prong
9K580218	Socket, tube: miniature (for 6AQ5 tube)
9A70208	Socket, tube: 4-prong (for vibrator)
31K490143	Strip, terminal: 2 ins lugs, #2 mtg
4S1706	Washer, flat: 3/8 x .203 x .033 thick; stl; cad pl (spkr mtg)
4S7555	Washer, flat: 1/4 x .128 x .033 thick; stl; cad pl (output transformer mtg)
MOUNTING PARTS & ACCESSORIES	
7B590609	Bracket, tuning unit mtg
1X590563	Button, push: includes clip; 2-3/32" long
1X590656	Button, push: includes clip; 2-3/64" long
1X590661	Button, push: includes clip; 1-15/16" long
1X590662	Button, push: includes clip; 1-25/32" long
1X590663	Button, push: includes clip; 'M'
43A590621	Bushing, spacer: chrome pl (large)
43A590603	Bushing, spacer (small)
8A4491	Capacitor, generator
32C590643	Gasket, speaker: rubber
36K472939	Knob, reset: chrome pl (tone control)
36K590638	Knob, volume and tuning control
4S7693	Lockwasher, split: 1/4 stl; cad pl (tuner unit mtg)
2S7022	Nut, hex: 1/4-20 x 7/16; stl; cad pl (tuner unit mtg)
2S8397	Nut, hex: 1/2-28 x 5/8; stl; cad pl (tuner unit mtg to instrument panel)
64A13637	Plate, serrated (tuner unit mtg)
64D590704	Plate, trim: chrome pl
2S490342	Speednut: 10-24 blued (power & audio unit mtg).
46A590644	Stud, threaded shoulder (power & audio unit mtg)
6A4141	Suppressor, distributor
4K590606	Washer, cup: chrome pl
4K489323	Washer, felt (reset knob)

©John F. Rider

Compliments of www.nucow.com

GENERAL INFORMATION

TYPE - Specifically designed for installation in the 1950 and 1949 Chevrolet

TUNING RANGE - 540 to 1600 Kc

IF FREQUENCY - 455 Kc

TUBE COMPLEMENT - 6BE6 - Converter
6BA6 - IF Amplifier
6AV6 - Det, AVC & 1st AF Amp
6AS5 - Power Amplifier
6X4 - Rectifier

POWER INPUT - 5.0 amps at 6.3V DC

POWER OUTPUT - 2 watts (maximum)

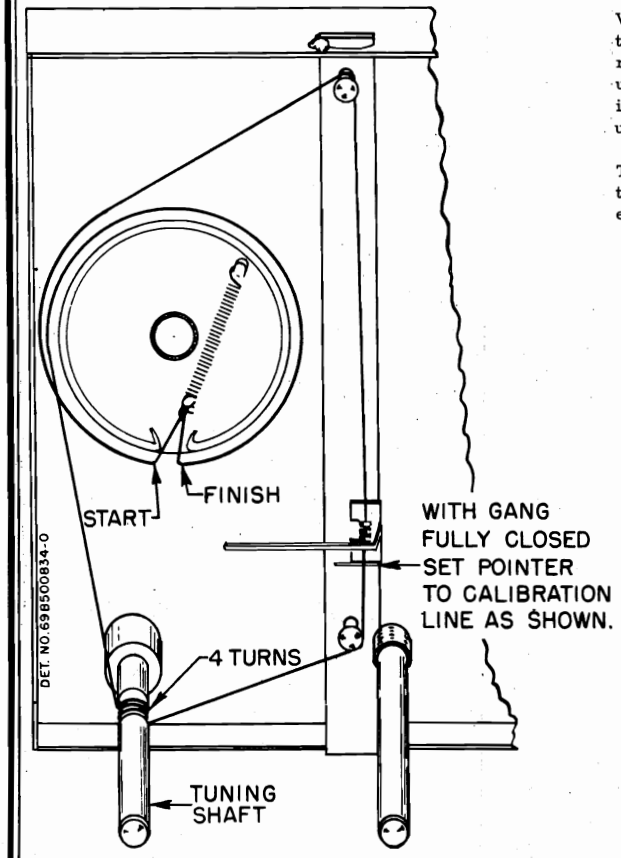

FIGURE 1. STRING DRIVE DETAIL

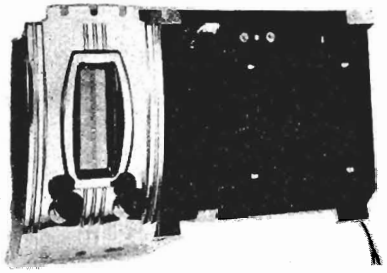

OPERATING INSTRUCTIONS

VOLUME CONTROL & ON-OFF SWITCH. The volume control and on-off switch are combined and are operated by the right-hand knob. Turn radio on by turning knob to the right until a "click" is heard. Continued rotation to the right will increase volume. To turn radio off, turn knob fully to left until a "click" is heard.

TUNING. Tune stations with the left-hand knob. Always tune carefully until you are exactly on the station; tuning to either side of it will result in poor tone quality.

ALIGNMENT

EQUIPMENT REQUIRED

1. A small screwdriver for IF & RF alignment.
2. An accurately calibrated 400 cycle, AM modulated signal generator.
3. A low range output meter.
4. A special dummy antenna for RF alignment. Construct dummy antenna as shown in Figure 2.

PROCEDURE

1. All adjustments are accessible without removing the covers, through holes provided.
2. Connect an output meter across the voice coil.
3. Connect a 6 volt storage battery to chassis and BATT terminal of receiver; turn receiver on and allow it to warm up for a few minutes.
4. For greatest accuracy, keep output of receiver at approximately 1/2 watt (1/2 watt = 1.25 volts on output meter) throughout alignment by reducing generator output (not receiver volume control) as stages are brought into alignment.

ALIGNMENT CHART

STEP	DUMMY ANTENNA	GENERATOR CONNECTED TO	GENERATOR FREQUENCY	GANG SET TO	ADJUST	REMARKS
IF ALIGNMENT						
1.	.1 mf	Hi side - 6BE6 grid (pin #7) Lo side - chassis	455 Kc	High freq. end	1, 2, 3 & 4	Peak for maximum in order indicated. Check by repeating procedure.
RF ALIGNMENT						
2.	Special see Fig. 2.	Ant. receptacle thru special dummy	1605 Kc	Gang open	5	Peak for maximum
3.	"	"	1400 Kc	Tune in signal	6	Peak for maximum
4.	"	"	600 Kc	"	7	Peak antenna padder for maximum while rocking gang.

5. Repeat steps 3 & 4 until maximum output is obtained. The last adjustment should be trimmer (6).
6. With set installed in car, peak antenna trimmer (6) for maximum noise or volume of a weak station. Car antenna should be fully extended, and receiver set to approximately 1400 Kc.

©John F. Rider

Compliments of www.nucow.com

MODEL CTOM,
Chevrolet, 1949-1950

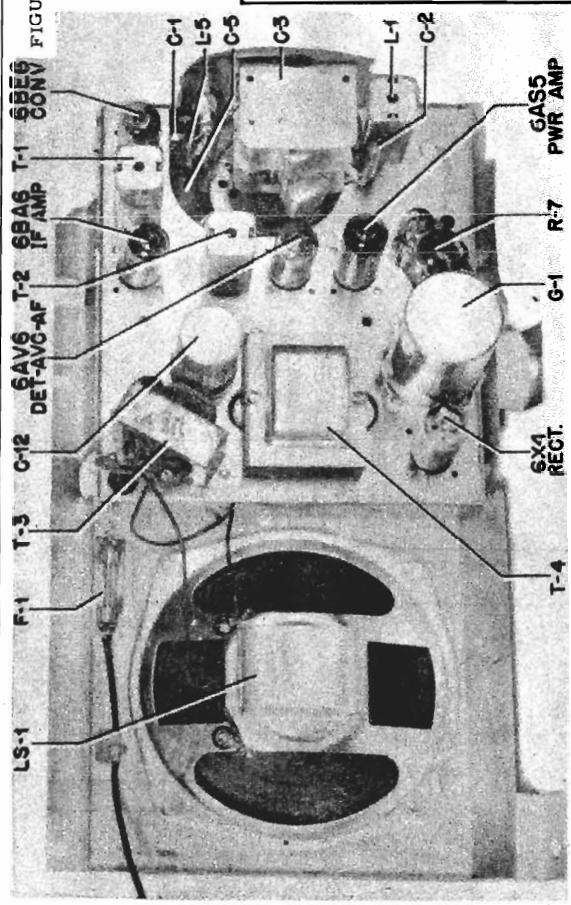

FIGURE 3. PARTS LOCATION - RECEIVER REAR VIEW

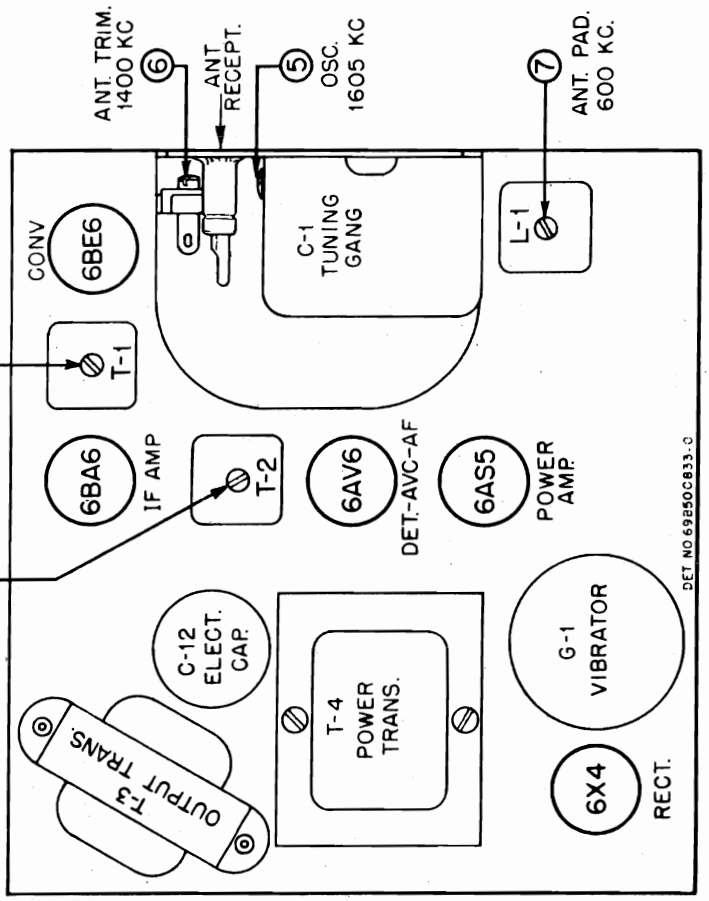

FIGURE 2. TUBE & TRIMMER LOCATIONS

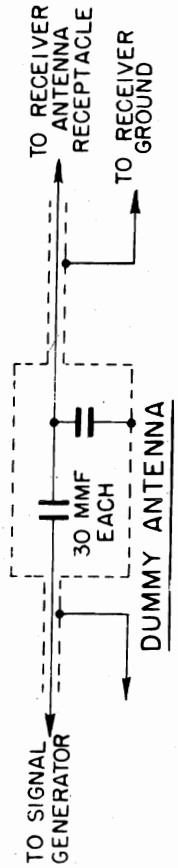

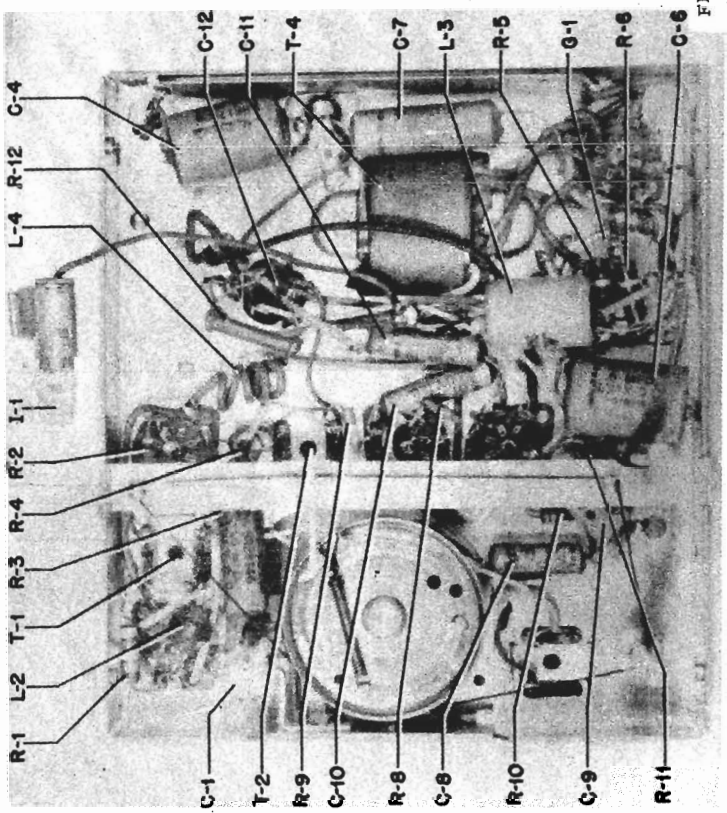

FIGURE 4. PARTS LOCATION - CHASSIS BOTTOM VIEW

©John F. Rider

Compliments of www.nucow.com

MODEL CTOM,
Chevrolet, 1949-1950

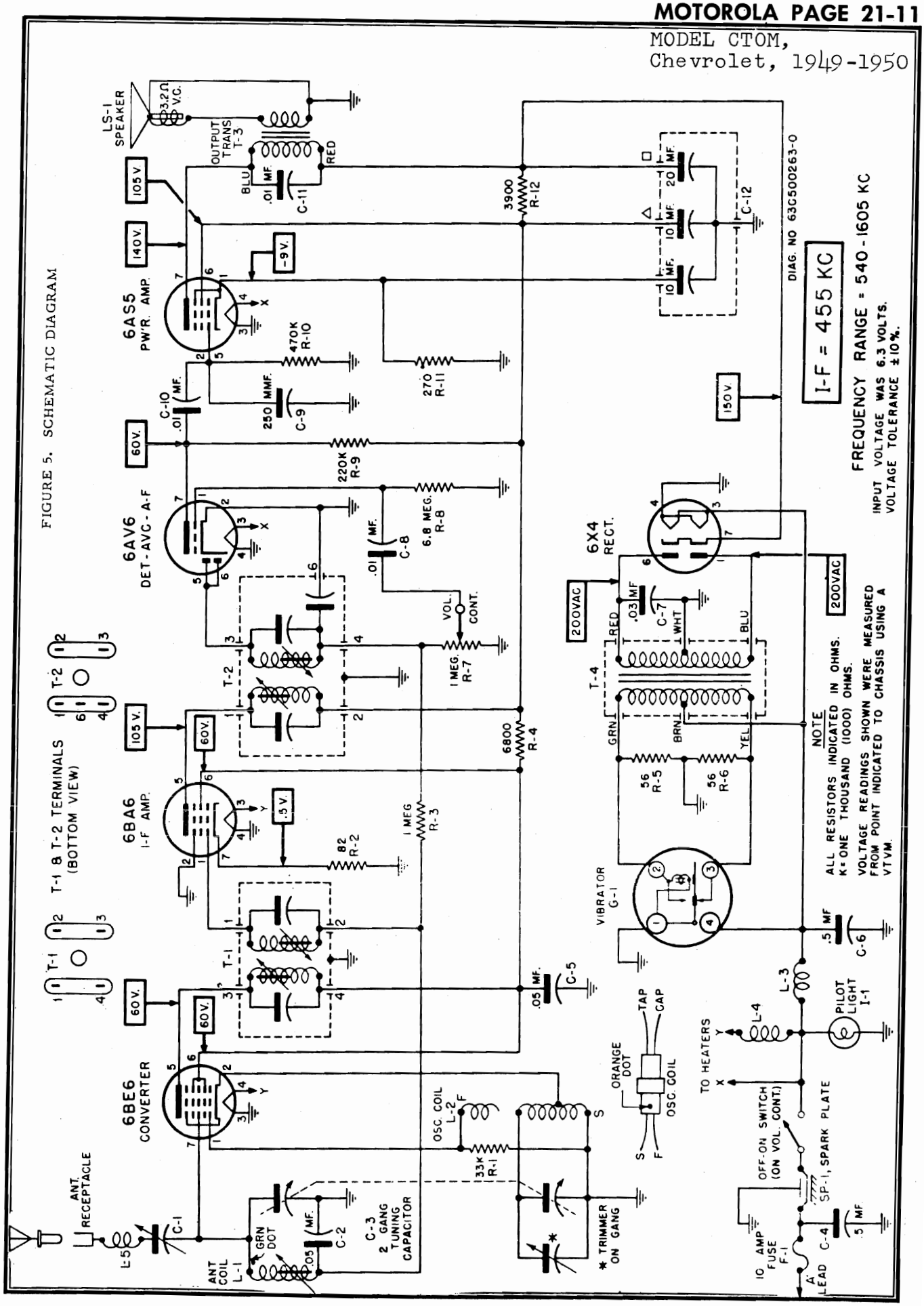

FIGURE 5. SCHEMATIC DIAGRAM

©John F. Rider

Compliments of www.nucow.com

MODEL C TOM,
Chevrolet, 1949-1950

REPLACEMENT PARTS LIST

NOTE: When ordering parts specify model number of set in addition to part number and description of part.

Ref. No.	Part No.	Description
CHASSIS PARTS - ELECTRICAL		
Capacitors		
C-1	20K500197	Trimmer, variable mica: 70 mmf; includes mounting brkt.....
C-2	8R13514	Paper: .05 mf 100V.....
C-3	19B500195	Variable, 2-gang.....
C-4	8K17028	Paper: .5 mf 100V.....
C-5	8R23146	Paper: .05 mf 200V.....
C-6	8K17028	Paper: .5 mf 100V.....
C-7	8R592154	Paper: .03 mf 600V.....
C-8	8R472754	Paper: .01 mf 100V.....
C-9	21R6662	Mica: 250 mmf 500V.....
C-10	8R23690	Paper: .01 mf 400V.....
C-11	8R23053	Paper: .01 mf 200V.....
C-12	23A500059	Electrolytic: 20 mf-10 mf 250V; 10 mf 25V.....
Fuse		
F-1	65A10266	Fuse: 10 amp.....
Vibrator		
G-1	48B3333	Vibrator: non-sync; 4-pin full wave.....
Bulb		
I-1	65X11854	Bulb: 6-8V; .20 amp; round; bayonet base; clear.....
Coils		
L-1	24B591628	Antenna coil.....
L-2	24A591629	Oscillator coil.....
L-3	24A472535	Choke, hash.....
L-4	24K78026	Choke, hash.....
L-5	24K592197	Choke, antenna spark.....
Speaker		
LS-1	50B500460	Speaker, PM: 5-1/4"; 3.2 ohm VC....
Resistors		
		Note: All resistors are carbon, insulated type unless otherwise specified.
R-1	6R6012	33,000 20% 1/2W.....
R-2	6R2035	82 10% 1/2W.....
R-3	6R6004	1 meg 20% 1/2W.....
R-4	6R6428	6800 10% 1/2W.....
R-5	6R5614	56 10% 1/2W.....
R-6	6R5614	56 10% 1/2W.....
R-7	18A500423	Volume control: 1 meg; includes on-off switch.....
R-8	6R3987	6.8 meg 20% 1/2W.....
R-9	6R6015	220,000 20% 1/2W.....
R-10	6R6032	470,000 20% 1/2W.....
R-11	6R6336	270 10% 1W.....
R-12	6R488313	3900 10% 1W N.I.....
Spark Plate		
SP-1	1A591512	Spark Plate Assembly.....
Transformers		
T-1	24K591556	IF, 455 Kc: complete with padding capacitors, tuning cores and shield.....
T-2	24K591555	Diode, 455 Kc: complete with padding capacitors, tuning cores and shield.....
T-3	25K500194	Output Transformer.....
T-4	25C500189	Power Transformer.....
CHASSIS PARTS - MECHANICAL		
	1X500445	Bracket, pointer: with two shoulder rivets.....
	43A500497	Bushing, tuning shaft.....
	42A4215	Clip, vibrator grounding.....
	11M8877	Cord, dial: #20 nylon black.....
	15C500406	Cover, rear.....
	4S7666	Lockwasher ext: #6; stl; cad pl (power trans mtg).....
	2S7005	Nut, hex: 6-32 x 1/4 stl; cad pl (power trans mtg).....
	2S7051	Nut, hex: 3/8-32; Palnut; stl; cad pl (volume control mtg).....
	1K500174	Pointer and Slider Assembly.....
	9A472148	Receptacle, antenna contact.....
	5S7771	Rivet: .088 x 3/16 stl; nkl pl (tube socket mtg).....
	5S7707	Rivet: .122 x 5/32; stl; nkl pl (terminal strip, spark plate and capacitor bracket mtg).....
	5S7701	Rivet: .122 x 3/16 stl; nkl pl (vibrator clip and output transformer mtg)..
	5K12814	Rivet, shoulder: stl; nkl pl (dial cord guide).....
	3S7350	Screw, machine: 6-32 x 1/4; slotted hex head; locking type; stl; cad pl (gang mtg).....
	3S7454	Screw, sheet metal: #8 x 1/4 PKZ plain hex head; stl; cad pl (dial bracket mtg).....
	47A500422	Shaft, tuning.....
	9A500198	Socket, pilot light: includes bracket
	9A70208	Socket, tube: 4 prong.....
	9A472534	Socket, tube: 7 prong.....
	9K580218	Socket, tube: 8 prong.....
	41A14111	Spring, slider tension.....
	22S7906	Staple, flat head.....
	31A500418	Strip, terminal: 1 insulated lug #2 mtg.....
	4S7555	Washer: 1/4 x .128 x .033 thick; stl; cad pl (output trans mtg).....
	4A11291	Washer "C" (tuning shaft retainer)..
HOUSING PARTS & ACCESSORIES		
	7C500409	Bracket, dial background.....
	8A4491	Capacitor, noise suppression.....
	42A500196	Clip, dial scale retainer.....
	1X500450	Cover Assembly, front: includes fuse mtg strip.....
	4K590653	Insulator, armite (used on "A" lead)..
	36B500459	Knob, control.....
	1X500451	Lead Assembly, "A".....
	64D500416	Plate, trim: chrome pl.....
	34B500179	Scale, dial.....
	3S7454	Screw, sheet metal: #8 x 1/4; PKZ plain hex head; stl; cad pl (chassis to front plate and dial bracket mtg).....
	3S8176	Screw, sheet metal: #10 x 3/8 PKZ plain hex head; stl; cad pl (speaker mtg).....
	3S7104	Setscrew: 8-32 x 3/16 slotted headless; stl; cad pl (knob retainer).....
	2S490342	Speednut: 10-24; blued (receiver mtg).
	6A4141	Suppressor, noise.....

©John F. Rider

Compliments of www.nucow.com

CHASSIS HS-190, HS-190A, HS-234

RECEIVER MODELS

Model	Radio Chassis Used	Record Changer Used	TV Chassis Used
12VF4R	HS-190	M4RC	TS-23 Series
12VF4B	HS-190	M4RC	TS-23 Series
12VF4R-C	HS-190	W6RC	TS-23 Series
12VF26R	HS-190A	M3RC	TS-23 Series
12VF26B	HS-190A	M3RC	TS-23 Series

Model	Radio Chassis Used	Record Changer Used	TV Chassis Used
12VF26R-C	HS-190A	W5RC	TS-23 Series
12VF26B-C	HS-190A	W5RC	TS-23 Series
16F1	HS-234	RC-36	TS-60
16F1B	HS-234	RC-36	TS-60

RECORD CHANGER: Model RC-36, page RCD.CH.21-1.

RADIO CHASSIS - HS-190: Radio chassis HS-190 contains 6 tubes, plus a selenium rectifier, and it receives both AM and FM broadcast programs. Except for common speakers, it operates entirely independently of the television receiver.

HS-190A: Same as chassis HS-190 except for shorter AC power lead and loop lead.

HS-234: Similar to chassis HS-190 except for different lead lengths, different phono motor and pick-up connectors, and the addition of a phono power switch to the tone control.

RADIO TUNING RANGE - AM - 535 to 1620 Kc
FM - 88 to 108 Mc

RADIO IF FREQUENCIES - AM IF - 455 Kc
FM IF - 10.7 Mc

ANTENNAS - AM: Loop antenna mounted in the cabinet
FM: Built into the power cord, with terminals for connection of an external antenna, if required.

SPEAKERS - RADIO: 10" PM
TV: Dual 10" PM and 5" electrodynamic

POWER SUPPLY - 117 volts, 60 cycle alternating current only

RADIO POWER CONSUMPTION - 60 watts, including phono motor

RADIO AUDIO OUTPUT - 2 watts.

RADIO CHASSIS TUBE COMPLEMENT -
12BA6 - FM-AM RF Amplifier
12BA7 - FM-AM Converter
12BA6 - FM-AM IF Amplifier
12BA6 - FM-IF Amplifier
19T8 - FM Ratio Detector, AM Detector & 1st Audio Amp
50C5 - Power Amplifier
Rectifier - Selenium type

INSTALLATION & OPERATING INSTRUCTIONS

ANTENNAS

No outside antenna or ground is normally required for standard broadcast (AM) reception, as a loop antenna is located at the rear of the cabinet. In locations where additional pick-up is desired, an external antenna may be connected to the loop antenna by taping the lead-in wire over the dashed lines on the loop panel. Do not use a shorted turn.

An FM antenna, built into the power cord, eliminates the need for an external FM antenna when the receiver is used in normal FM service areas, such as are found in and for a few miles around metropolitan areas. In 'fringe' or weak signal areas, improved FM reception can be obtained by using an outside FM antenna. The external antenna should be connected through a 300 ohm twin transmission line to screws #1 and #2 on the terminal strip on the loop antenna panel, as in Figure 1. The link between screws #2 and #3 should be opened. Orient the antenna to obtain maximum volume of the FM stations.

For best FM reception from the built-in power line cord antenna, it is important to stretch the cord to its full length. Changing the direction or position of the line cord, or reversing the plug in the wall outlet, will often improve reception from weak stations. Connect the link between screws #2 and #3 on the terminal strip on the loop antenna when the built-in antenna is used.

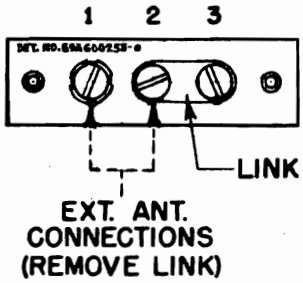

FIGURE 1 ANTENNA CONNECTIONS

CAUTION: Do not connect the antenna or chassis to a water pipe, radiator, or other ground.

©John F. Rider

Compliments of www.nucow.com

CHASSIS HS-190,
HS-190A, HS-234

CONTROLS

Refer to Figure 2 for the location of the radio controls.

POWER SWITCH AND VOLUME CONTROL. The volume control and power switch for both radio and phonograph operation are combined and are operated with the extreme left-hand knob. **CAUTION:** The power switches on the AM-FM radio and on the television receiver are independent. Make sure both are turned off when the set is not in use.

PHONO-TONE-RADIO CONTROL. For phonograph operation, rotate the second knob from the left fully clockwise until a 'click' is heard. For radio operation, rotate the knob fully counterclockwise until a 'click' is heard. Tone may be varied between these two positions. **NOTE:** On the 16F1 model, rotating the control to the "PHONO" position also starts the phono motor. Models 12VF4 and 12VF26 have separate power switches on the phonograph itself.

FM-AM SELECTOR SWITCH. Rotate the extreme right-hand control clockwise for AM (Standard Broadcast) or counterclockwise for FM (Frequency Modulation), as desired.

TUNING CONTROL. The third control from the left selects the desired FM or AM station. The standard broadcast scale (AM) is read in kilocycles by adding one '0' to the figures. The frequency modulation scale (FM) is read in megacycles (88 to 108).

Tuning of FM stations should be done very carefully, for best sound reproduction, not necessarily for strongest volume received.

FIGURE 2. OPERATING CONTROLS

SERVICE NOTES

DET. NO. 69B691643-0

The chassis of this receiver is connected directly to the power line. When operating the chassis outside of its cabinet, use an isolation transformer between the power line and the receiver to reduce the possibility of electrical shock. If an isolation transformer is not available, check the AC voltage between the chassis and the bench ground. If there is any indication of voltage, reverse the line plug before handling the set.

TO REMOVE RADIO CHASSIS FROM CABINET

1. Remove the large panel covering the rear of the cabinet.
2. Pull off the four knobs on the front of the cabinet.
3. Remove the five screws holding the radio loop panel to the cabinet.
4. Pull the loop panel loose from the interlock plug.
5. Disconnect the power and loop leads between the loop panel and the television and radio chassis.
6. Disconnect the speaker and phonograph leads.
7. Remove the two screws holding the interlock plug bracket.
8. Remove the three chassis mounting screws.
9. Slide the chassis from the cabinet.
10. Refer to Figure 3 when reassembling the chassis into the cabinet.

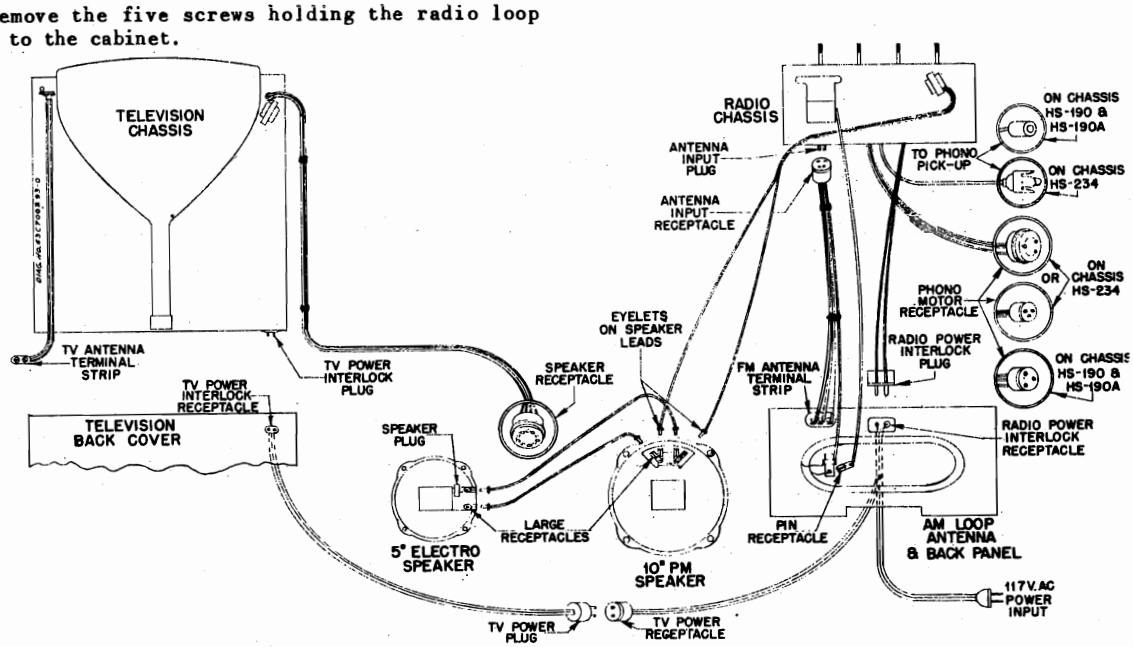

FIGURE 3. INTERCONNECTING CABLE DIAGRAM

©John F. Rider

Compliments of www.nucow.com

CHASSIS HS-190, HS-190A, HS-234

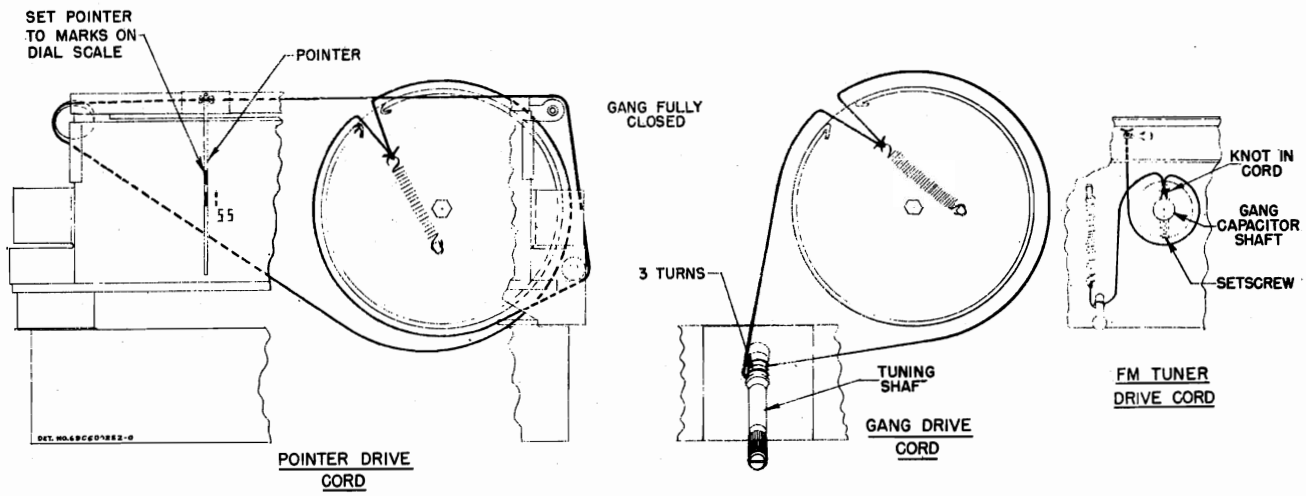

FIGURE 4. DIAL RESTRINGING DETAIL

ALIGNMENT

GENERAL INFORMATION

1. Maximum performance can be obtained only if extreme care is exercised during alignment.

2. It is recommended that an isolation transformer be placed between the power line and the receiver during alignment to avoid hum and electrical shocks. If an isolation transformer is not available, connect the low side of the signal generator to the receiver chassis through a .1 mf capacitor.

3. Use a small fibre screwdriver for aligning the IF transformer.

4. Refer to Figure 5 for the location of all alignment trimmers and cores.

5. As the stages are brought into alignment, reduce the signal generator output to a low value to avoid overloading the receiver.

ORDER OF ALIGNMENT AND EQUIPMENT REQUIRED

1. Broadcast Band IF & RF Alignment
   a. 455 to 1620 Kc AM signal generator
   b. Low range output meter

2 (A) FM Band IF & RF Alignment (Preferred Method)
   a. 10.7 to 108 Mc FM signal generator
   b. Oscilloscope

(B) FM Band IF & RF Alignment (Alternate Method)
   a. 10.7 to 108 Mc signal generator (unmod.)
   b. Low range DC electronic voltmeter

BROADCAST BAND - IF & RF ALIGNMENT

1. With the gang fully closed, adjust the pointer to coincide with the calibration marks at the left of "55" on the dial scale. See Figure 4.

2. Connect the AM signal generator as in chart below, with 400 cycle, 30% modulation.

3. Connect the output meter across the speaker voice coil. Throughout alignment, reduce the generator output to a level which produces less than 1.27 volts across the voice coil to avoid overloading the receiver.

4. Set the bandswitch to the AM position.

5. Turn the receiver volume control to maximum.

6. Proceed as shown in the following chart.

STEP	DUMMY ANTENNA	GENERATOR CONNECTION	GENERATOR FREQUENCY	GANG SETTING	ADJUST	REMARKS
IF ALIGNMENT						
1.	.1 mf	Grid of conv. V-2 (pin 7, 12BA7)	455 Kc	Fully opened	1, 2, 3 & 4 (IF cores)	Adjust for maximum.
RF ALIGNMENT						
2.	.1 mf	Grid of conv. V-2 (pin 7, 12BA7)	1620 Kc	Fully opened	5 (BC osc)	Adjust for maximum.*
3.	-	Across radiation loop**	1400 Kc	Tune in signal	8 (BC ant)	Adjust for maximum.

4. If, after the receiver has been aligned as above, it is found to be badly off calibration, it will be necessary to adjust oscillator core (7) as follows: connect the generator to the grid of the converter tube and, with the gang fully closed, adjust core (7) at 535 kc. It is advisable to repeat the oscillator adjustments at 1620 Kc and 535 kc several times until the tuning range is correct. Core (7) has been preset at the factory and normally should require no retuning.

* If difficulty is encountered in tuning trimmer (5), adjust trimmer (6) to ½ turn from tight.

** Connect generator output across 5" diameter, 5 turn loop and couple inductively to receiver loop. Keep loops at least 12" apart.

©John F. Rider

Compliments of www.nucow.com

CHASSIS HS-190,
HS-190A, HS-234

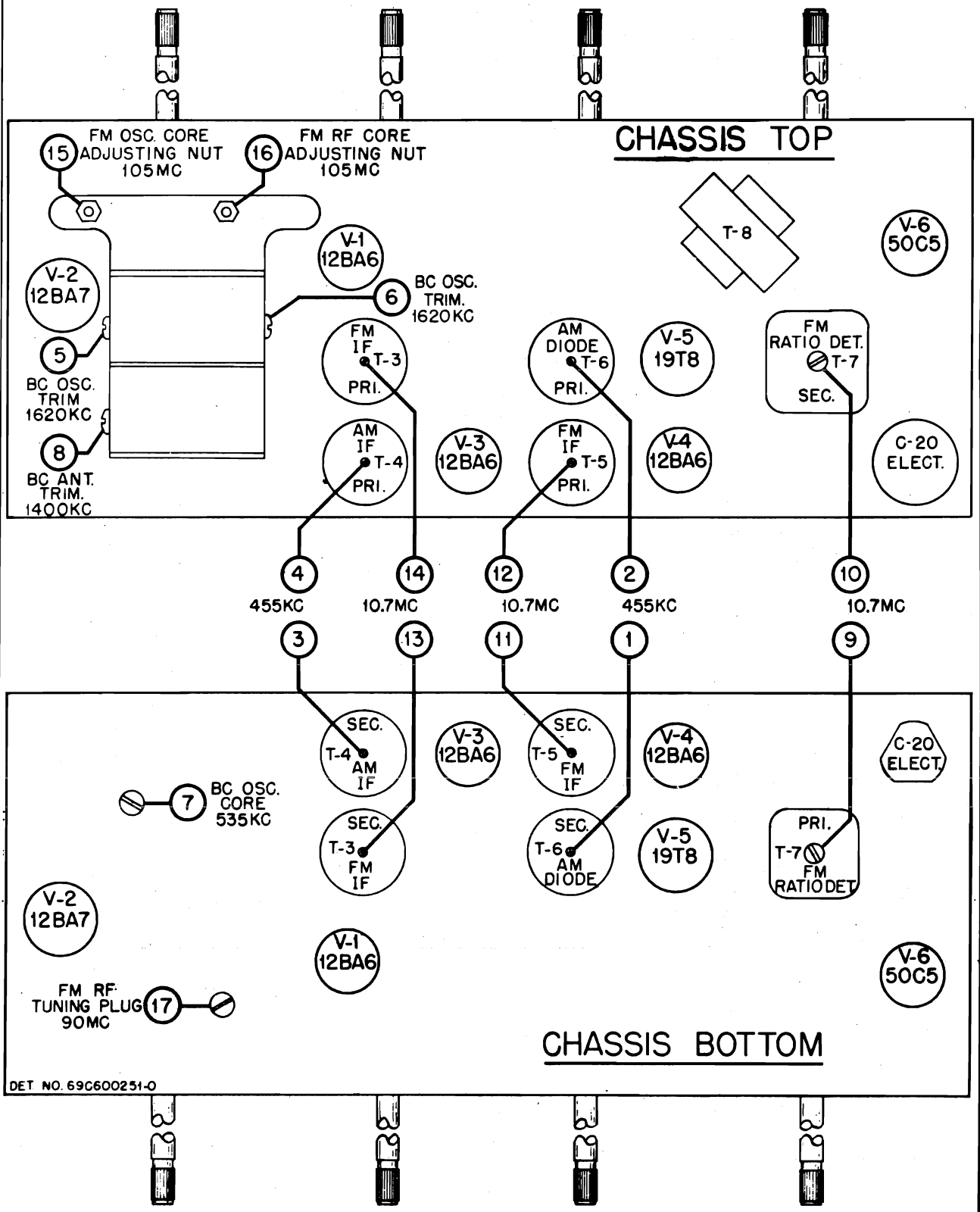

FIGURE 5. TUBE & TRIMMER LOCATION

©John F. Rider

Compliments of www.nucow.com

CHASSIS HS-190,
HS-190A, HS-234

FM BAND - IF & RF ALIGNMENT (PREFERRED METHOD)

1. The following FM alignment procedure, using an FM signal generator and an oscilloscope, is to be preferred because the actual response pattern may be observed on the scope and adjusted for best symmetry and maximum amplitude.

2. Connect the vertical input terminals of the oscilloscope between the chassis and the junction of resistor R-24 (22K) and capacitor C-35 (1000 mmf).

3. Connect the FM signal generator sync voltage output terminals, through a phase shifting network, to the horizontal input terminals of the scope, as in Figure 6. (Other values of resistance and capacitance may be required, depending upon the scope). The phasing control should be adjusted to give only one trace on the scope. **NOTE:** If the FM generator has a built-in phase control, the phase shifting network is not necessary.

4. Set the bandswitch to the FM position.

5. Throughout alignment, reduce the generator output to keep the signal just above the noise level, to avoid overloading the receiver.

6. Proceed as shown in the following chart.

STEP	DUMMY ANTENNA	GENERATOR CONNECTION	GENERATOR FREQUENCY	TUNER SETTING	ADJUST	REMARKS
IF ALIGNMENT						
1.	1000 mmf	Grid of 2nd IF Amp V-4 (pin 1, 12BA6)	10.7 mc ±100 kc dev	Fully opened	9 (ratio det pri)	Adjust for maximum amplitude of pattern.*
2.	1000 mmf	Grid of 2nd IF Amp V-4 (pin 1, 12BA6)	10.7 mc ±100 kc dev	Fully opened	10 (ratio det sec)	Adjust for symmetrical curve, as shown in Figure 7.
3.	-	-	-	-	-	Repeat steps 1 & 2 for maximum amplitude and best symmetry.
4.	1000 mmf	Grid of 1st IF Amp V-3 (pin 1, 12BA6)	10.7 mc ±100 kc dev	Fully opened	11 & 12 (2nd IF sec & pri)	Adjust for maximum amplitude of pattern.*
5.	1000 mmf	Grid of conv V-2 (pin 7, 12BA7)	10.7 mc ±100 kc dev	Fully opened	13 & 14 (1st IF sec & pri)	Adjust for maximum amplitude of pattern.*
6.	1000 mmf	Grid of conv V-2 (pin 7, 12BA7)	10.7 mc ±100 kc dev	Fully opened	11, 12, 13 & 14	Readjust for maximum amplitude and best symmetry.
RF ALIGNMENT						
7.	270 ohms	FM terminals on loop	105 mc ±22½ kc dev	105 mc on dial	15 (osc adj nut)	Adjust for maximum amplitude of pattern.*
8.	-	-	-	Fully closed	16 (RF adj nut)	Turn counterclockwise until core is at bottom of pipe, then turn four turns clockwise.
9.	270 ohms	FM terminals on loop	90 mc ± 22½ kc dev	Tune in signal	17 (RF tuning plug)	Adjust for maximum amplitude of pattern.*
10.	270 ohms	FM terminals on loop	105 mc ± 22½ kc dev	Tune in signal	16 (RF adj nut)	Adjust for maximum amplitude of pattern.*
11.	-	-	-	-	-	Repeat steps 9 & 10, until no further adjustment is necessary.

*An output meter across the speaker voice coil will also indicate maximum amplitude. It should not be used in place of the scope, however, since it will not show symmetry of the curve.

©John F. Rider

Compliments of www.nucow.com

CHASSIS HS-190,
HS-190A, HS-234

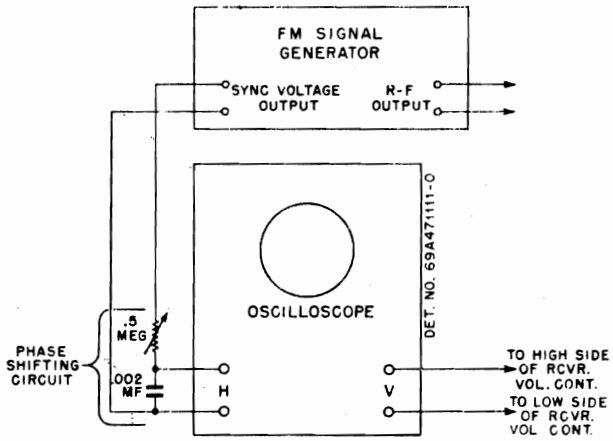

FIGURE 6.

FM SIGNAL GENERATOR & OSCILLOSCOPE HOOK-UP

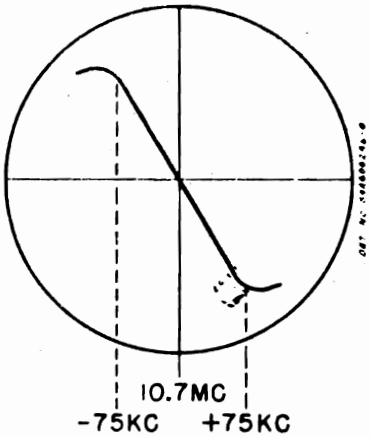

FIGURE 7.

RATIO DETECTOR WAVEFORM

FM BAND - IF & RF ALIGNMENT (ALTERNATE METHOD)

1. The following procedure for FM alignment, with an unmodulated carrier generator and a DC electronic voltmeter, is not as desirable as the preceding method; but it may be used if no FM generator is available.

2. Connect the signal generator as in chart below, with no modulation.

3. Set the bandswitch to the FM position.

4. Except in step 2 below, connect the electronic voltmeter across resistor R-33 (33K) in the ratio detector stage.

5. Throughout alignment reduce the signal generator output to a value which produces no more than a 5 volt rise above no signal voltage, to avoid overloading the receiver.

6. In step 2 below, connect two 100K ohm resistors in series across R-33. Connect the electronic voltmeter between the volume control side of resistor R-24 (22K) and the junction of the two 100K resistors, with the low side of the meter at the 100K resistors.

7. Proceed as shown in the following chart.

STEP	DUMMY ANTENNA	GENERATOR CONNECTION	GENERATOR FREQUENCY	TUNER SETTING	ADJUST	REMARKS
IF ALIGNMENT						
1.	1000 mmf	Grid of conv V-2 (pin 7, 12BA7)	10.7 mc	Fully opened	9, 11, 12, 13 & 14 (IF cores)	Adjust for maximum.
2.	1000 mmf	Grid of conv V-2 (pin 7, 12BA7)	10.7 mc	Fully opened	10 (ratio det sec)	Adjust for zero (connect meter as in step 6 above)
RF ALIGNMENT						
3.	270 ohms	FM terminals on loop	105 mc	105 mc on dial	15 (osc adj nut)	Adjust for maximum
4.	-	-	-	Fully closed	16 (RF adj nut)	Turn counterclockwise until core is at bottom of pipe, then turn four turns clockwise.
5.	270 ohms	FM terminals on loop	90 mc	Tune in signal	17 (RF tuning plug)	Adjust for maximum.
6.	270 ohms	FM terminals on loop	105 Mc	Tune in signal	16 (RF adj nut)	Adjust for maximum.
7.	-	-	-	-	-	Repeat steps 5 & 6 until no further adjustment is necessary.

©John F. Rider

Compliments of www.nucow.com

CHASSIS HS-190, HS-190A

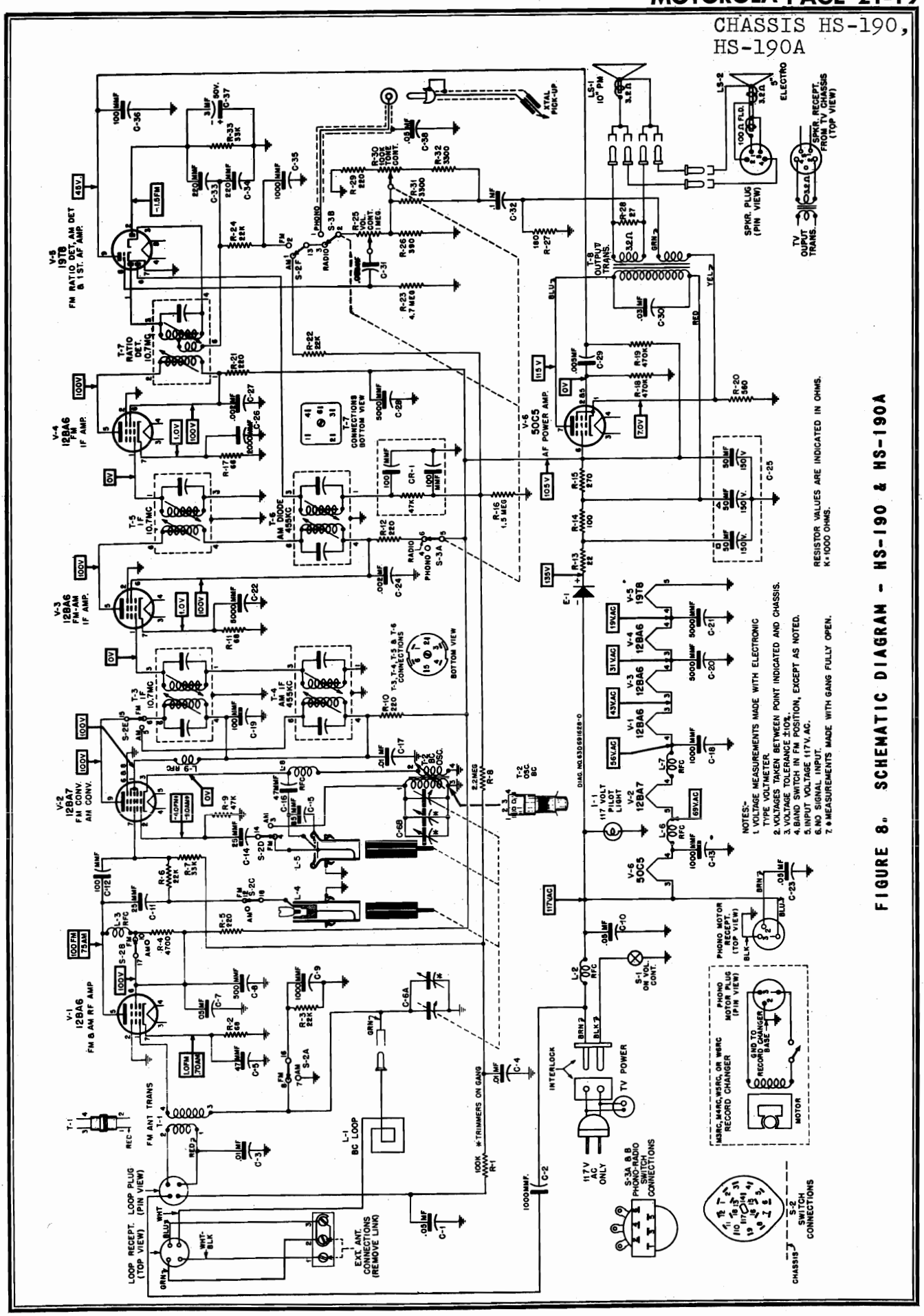

FIGURE 8. SCHEMATIC DIAGRAM - HS-190 & HS-190A

©John F. Rider

Compliments of www.nucow.com

CHASSIS HS-234

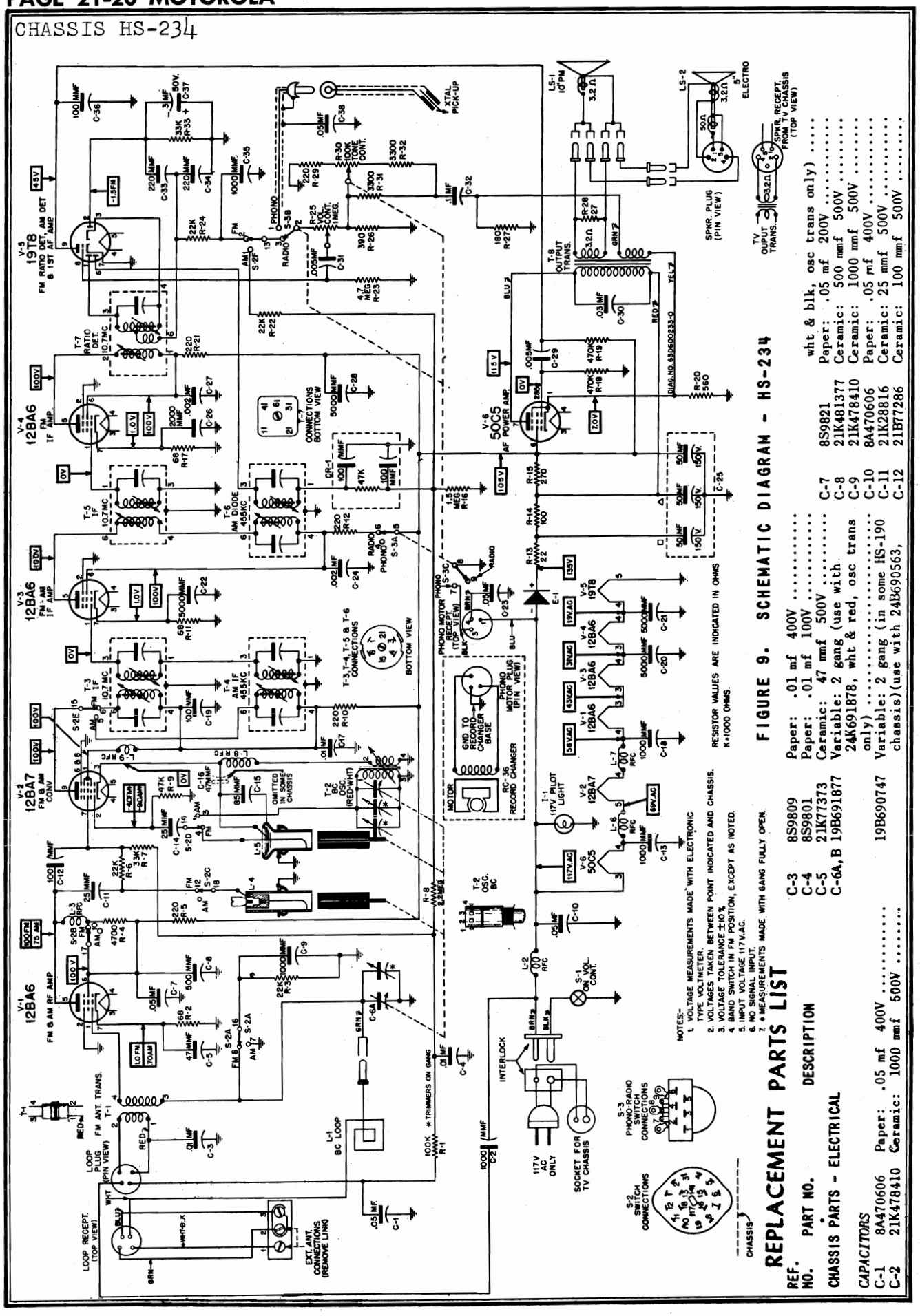

NOTES:-
1. VOLTAGE MEASUREMENTS MADE WITH ELECTRONIC TYPE VOLTMETER.
2. VOLTAGES TAKEN BETWEEN POINT INDICATED AND CHASSIS.
3. VOLTAGE TOLERANCE ±10%.
4. BAND SWITCH IN FM POSITION, EXCEPT AS NOTED.
5. INPUT VOLTAGE 117V.AC.
6. NO SIGNAL INPUT.
7. ♦ MEASUREMENTS MADE WITH GANG FULLY OPEN.

FIGURE 9. SCHEMATIC DIAGRAM - HS-234

REPLACEMENT PARTS LIST

REF. NO.	PART NO.	DESCRIPTION
CHASSIS PARTS - ELECTRICAL		
CAPACITORS		
C-1	8A470606	Paper: .05 mf 400V .....
C-2	21K478410	Ceramic: 1000 mmf 500V .....
C-3	8S9809	Paper: .01 mf 400V .....
C-4	8S9801	Paper: .01 mf 100V .....
C-5	21K77373	Ceramic: 47 mmf 500V .....
C-6A, B	19B691877	Variable: 2 gang (use with 24K691878, wht & red, osc trans only) .....
	19B690747	Variable: 2 gang (in some HS-190 chassis)(use with 24B690563, wht & blk, osc trans only) .....
C-7	8S9821	Paper: .05 mf 200V .....
C-8	21K481377	Ceramic: 500 mmf 500V .....
C-9	21K478410	Ceramic: 1000 mmf 500V .....
C-10	8A470606	Paper: .05 mf 400V .....
C-11	21K28816	Ceramic: 25 mmf 500V .....
C-12	21B77286	Ceramic: 100 mmf 500V .....

©John F. Rider

Compliments of www.nucow.com

PART NUMBER		DESCRIPTION
C-13	21K478410	Ceramic: 1000 mmf 500V .....
C-14	21K28816	Ceramic: 25 mmf 500V .....
C-15	21A690688	Ceramic: 85 mmf 500V .....
C-16	21K77373	Ceramic: 47 mmf 500V .....
C-17	8S9809	Paper: .01 mf 400V .....
C-18	21K471761	Ceramic: 1000 mmf 500V .....
C-19	21B77286	Ceramic: 100 mmf 500V .....
C-20	21A470789	Ceramic, disc type: 5000 mmf 450V
C-21	21A470789	Ceramic, disc type: 5000 mmf 450V
C-22	21A470789	Ceramic, disc type: 5000 mmf 450V
C-23	8A470606	Paper: .05 mf 400V .....
C-24	8S9824	Paper: .002 mf 400V .....
C-25	23B690539	Electrolytic: 50-50-50 mf/150V...
C-26	21K790912	Ceramic: 2000 mmf 500V .....
C-27	8S9824	Paper: .002 mf 400V .....
C-28	21A470789	Ceramic, disc type: 5000 mmf 450V .....
C-29	8A24966	Paper: .005 mf 100V .....
C-30	8R9872	Paper: .03 mf 600V .....
C-31	8A24966	Paper: .005 mf 100V .....
C-32	8K471636	Paper: .1 mf 200V .....
C-33	21K77375	Ceramic: 220 mmf 500V .....
C-34	21K77375	Ceramic: 220 mmf 500V .....
C-35	21K478410	Ceramic: 1000 mmf 500V .....
C-36	21B77286	Ceramic: 100 mmf 500V .....
C-37	23K690543	Electrolytic: 3 mf 50V .....
C-38	8A470606	Paper: .05 mf 400V .....
CAPACITOR-RESISTOR		
CR-1	21A473040	Capacitor-Resistor: 100 mmf, 100 mmf, 47,000 ohms .....
RECTIFIER		
E-1	48B482807	Selenium rectifier: half-wave; 150 ma .....
PILOT LIGHT		
I-1	65K691040	Bulb, incandescent: 117V; 10W bayonet base .....
COILS		
L-1	1X790757	Antenna Loop, Panel, and Leads Assembly: complete with line cord (12VF4) .....
	1X790758	Antenna Loop & Panel Assembly: complete with antenna terminal strip and interlock receptacle cover; less line cord and leads (12VF4) .....
	1X791664	Antenna Loop, Panel, and Leads Assembly: complete with line cord (12VF26) .....
	1X791665	Antenna Loop & Panel Assembly: complete with antenna terminal strip and interlock receptacle cover; less line cord and leads (12VF26) .....
	1X792539	Antenna Loop, Panel, and Leads Assembly: complete with line cord (16F1) .....
	1X792541	Antenna Loop & Panel Assembly: complete with antenna terminal strip and interlock receptacle cover; less line cord and leads (16F1) .....
L-2	24K691041	RF choke: insulated .....
L-3	24A90064	RF choke .....
L-4	24C690584	Inductor & Capacitor Assembly: FM RF; less tuning core .....
L-5	24K600519	Inductor & Capacitor Assembly: FM osc; less tuning core .....
L-6	24K780128	RF choke: insulated .....
L-7	24K780128	RF choke: insulated .....
L-8	24K780128	RF choke: insulated .....
L-9	24A691847	RF choke .....
SPEAKERS		
LS-1	50C791427	Speaker: 10" PM; 3.2 ohm VC..
LS-2	50C791426	Speaker: 5" electrodynamic; 3.2 ohm VC (12VF4 & 12VF26).
	50K792776	Speaker: 5" electrodynamic; 3.2 ohm VC (16F1) .....
RESISTORS		
		Note: All resistors are insulated carbon type unless otherwise specified.
R-1	6R6075	100,000 20% ½W .....
R-2	6R2039	68 10% ½W .....
R-3	6R6028	22,000 20% ½W .....
R-4	6R6039	4700 20% ½W .....
R-5	6R3933	220 20% ½W .....
R-6	6R6028	22,000 20% ½W .....
R-7	6R6012	33,000 20% ½W .....
R-8	6R3927	2.2 meg 20% ½W .....
R-9	6R6056	47,000 20% ½W .....
R-10	6R3933	220 20% ½W .....
R-11	6R2039	68 10% ½W .....
R-12	6R3933	220 20% ½W .....
R-13	17A690578	Wire wound: 22 10% 1.5W ...
R-14	6R3963	100 10% 2W .....
R-15	6R476116	270 10% 2W .....
R-16	6R3966	1.5 meg 20% ½W .....
R-17	6R2039	68 10% ½W .....
R-18	6R6032	470,000 20% ½W .....
R-19	6R6032	470,000 20% ½W .....
R-20	6R6291	560 10% ½W .....
R-21	6R3933	220 20% ½W .....
R-22	6R6028	22,000 20% ½W .....
R-23	6R2122	4.7 meg 20% ½W .....
R-24	6R6028	22,000 20% ½W .....
R-25	18A690549	Volume control: 1 meg; with ON-OFF switch .....
R-26	6R5554	390 10% ½W .....
R-27	6R5660	180 10% ½W .....
R-28	6R5683	27 10% ½W .....
R-29	6R3933	220 20% ½W .....
R-30	18B691152	Tone Control: 100,000; with phono-radio switch (HS-190 & HS-190A) .....
	18B691882	Tone Control: 100,000; with phono-radio switch (HS-234).
R-31	6R6036	3300 20% ½W .....
R-32	6R6036	3300 20% ½W .....
R-33	6R6012	33,000 20% ½W .....
SWITCHES		
S-1	-	On-off Switch (on volume control)
S-2	40B690538	Band Switch, AM-FM .....
S-3	-	Phono-radio switch (on tone cont)
TRANSFORMERS		
T-1	24A690544	FM Antenna Input Transformer ....
T-2	24K691878	BC Oscillator Transformer: wht & red dot (use with 19B691877 gang only) .....
	24B690563	BC Oscillator Transformer: wht & blk dot (in some HS-190 chassis) (use with 19B690747 gang only)..
T-3	24B690540	1st FM IF Transformer (orange dot): 10.7 mc; complete with capacitor and cores; less shield
T-4	24B482863	AM IF Transformer (brown dot); 455 Kc: complete with capacitors and cores; less shield.....
T-5	24B690541	2nd FM IF Transformer (yellow dot): 10.7 mc; complete with capacitor and cores; less shield
T-6	24B482865	AM Diode Transformer (red dot): 455 kc; complete with capacitors and cores; less shield.....
T-7	24B690542	Ratio Detector Transformer: 10.7 mc; complete with capacitors, cores, and shield.....
T-8	25B690805	Audio Output Transformer .....

CHASSIS PARTS - MECHANICAL

1X691054	Bracket and Shield Assembly, pilot light .....
1X690717	Bracket Assembly, tuning core mtg: includes shoulder rivet and anti-backlash clip .....
7C690567	Bracket, tuner mtg (gang mtg) .....
7A77337	Bracket, tuning shaft .....
42K690561	Clip, anti-backlash: single (on core mtg bracket) .....
42A690560	Clip, anti-backlash: double (on tuner mtg brkt) .....
42B482867	Clip, spring: blued finish (holds IF transformers) .....
39K17396	Contact, pin terminal (in molded phono motor receptacle)(HS-234).
11M488137	Cord, dial (core drive) .....
11M8944	Cord, dial (pointer drive) .....
30K21859	Cord, line: with plug; 9 ft long (AC power cord on loop panel).....
46B692164	Core, iron and screw: green dot (FM osc tuning core) .....
46K692165	Core, iron and screw (FM RF tuning core)
15A690556	Cover, interlock receptacle (on loop panel) .....
34C691014	Dial Scale: glass .....
1X691065	Dial Scale and Plate Assembly: complete with cord pulleys .....
5S7866	Eyelet: .125 x .091 brass; nkl pl (core drive cord retainer).....
5S3113	Eyelet: .182 x .194 brass (pilot light bracket mtg) .....
5S7820	Eyelet: .450 x .125 (on speaker leads) .....
5S7855	Eyelet: .484 x .156 (on speaker leads) .....
5A691144	Grommet, rubber (pilot light bracket mtg) .....
14A691961	Insulator, bracket: fibre (dial plate bracket mtg) .....

© John F. Rider

Compliments of www.nucow.com

PART NUMBER	DESCRIPTION
14A690802	Insulator, chassis front: fibre (tuning shaft mtg) .....
14A690535	Insulator, chassis front: fibre (volume, tone, and bandswitch mtg)
14A484225	Insulator, chassis mtg: white plastic.
14A690548	Insulator, control: bakelite (volume, tone, and bandswitch mtg).....
14A690619	Insulator, tuning shaft: bakelite ..
1X691969	Lead and Plug Assembly, phono pick-up (HS-234) .....
1X691032	Lead and Receptacle Assembly, phono pick-up (HS-190 & HS-190A) .....
4S7650	Lockwasher, internal: #6; cad pl (interlock receptacle cover mtg)
4S9751	Lockwasher, int-ext: #8; cad pl (pointer drive pulley mtg) .....
29R5252	Lug, soldering: #6 (holds spkr leads) .....
2S7019	Nut, hex: 4-40 x 1/4; cad pl (FM tuning core mtg) .....
2S7051	Nut, hex palnut: 3/8-32 x 9/16; cad pl (volume, tone and bandswitch mtg) .....
35K691846	Pad, rubber: 1-hole (gang mtg).....
35A691845	Pad, rubber: 2-hole (gang mtg).....
1X691062	Plug and Bracket Assembly, interlock.
28A690615	Plug, antenna input: 4-pin .....
28K71775	Plug, phono pick-up (HS-234) .....
52B481704	Pointer, dial .....
49A23960	Pulley, cord: 1/4" groove (on dial plate assembly) .....
49A21552	Pulley, cord: 1/2" groove (on dial plate assembly) .....
49A690562	Pulley, core drive: brass .....
1A691015	Pulley, pointer drive: 3½" diam....
9K690618	Receptacle, antenna: 4-prong; includes shell .....
9A15907	Receptacle, interlock: 2-prong (on loop panel) .....
9A30680	Receptacle, phono motor: 3-prong; includes shell (HS-190 & HS-190A).....
9K470402	Receptacle, phono motor: 5-prong; molded; includes contacts (HS-234)..
9A600040	Receptacle, phono motor: 3-prong; includes shell (HS-234) .....
9A71639	Receptacle, phono pick-up (HS-190 & HS-190A) .....
9A470980	Receptacle, pin (on lead from gang to loop) .....
9A791031	Receptacle, TV power: 2-prong; includes shell .....
5S8497	Rivet: .088 x 1/8 steel; nkl pl (anti-backlash clip mtg).....
5S7771	Rivet: .088 x 3/16 steel; nkl pl (min socket mtg) .....
5S7774	Rivet: .088 x 1/4 steel; nkl pl (noval socket mtg) .....
5S7707	Rivet: .122 x 5/32 steel; nkl pl (term strip mtg) .....
5S7701	Rivet: .122 x 3/16 steel; nkl pl (ant input plug mtg) .....
5S7700	Rivet: .122 x 1/4 steel; nkl pl (interlock receptacle cover mtg)
5S7728	Rivet: .122 x 5/16 steel; nkl pl (tuning shaft bracket mtg) .....
5K27675	Rivet, shoulder (cord pulley mtg).
5K13896	Rivet, shoulder (on core mtg bracket) .....
3S7163	Screw, machine: 8-32 x 1/4 plain hex head; cad pl (pointer drive pulley mtg) .....
3S7205	Screw, machine: 8-32 x 1/4 slotted locking hex head; cad pl (gang mtg)...
3S2695	Screw, sheet metal: #6 x 3/16 PKZ plain hex head; cad pl (tuner brkt mtg)
3S3360	Screw, sheet metal: #6 x ½ PKZ plain hex head; cad pl (pilot light bracket mtg) .....
3S490325	Screw, sheet metal: #6 x 1-1/8" PKZ plain hex head; cad pl (selenium rectifier mtg) .....
3S7512	Screw, sheet metal: #8 x ½ PKZ plain hex head; cad pl (dial plate bracket mtg) .....
3S7471	Screw, thread-cutting: 6-32 x 1/4 plain hex head; cad pl (interlock receptacle mtg) .....
3S7103	Setscrew: 8-32 x 1/8 Allen head; cad pl (core drive pulley mtg) .....
1X691025	Shaft, tuning: complete with pulley....
15A690616	Shell, receptacle (on antenna receptacle)
15K74443	Shell, receptacle (on TV power receptacle) .....
26K485936	Shield, coil (for IF transformers)...
26A481521	Shield, tube: spring type .....
9K691017	Socket, pilot light .....
9K484167	Socket, tube: miniature; 7-prong .....
9A485495	Socket, tube: noval; 9-prong .....
41A690598	Spring, coil: 7 turns; cosmoline dipped (FM RF core mtg) .....
41K691840	Spring, coil: 8 turns; cop pl (FM osc core mtg) .....
41A14244	Spring, tension (core & pointer drive cord) .....
37K21114	Strip, channel: rubber; 1" long (dial scale mtg) .....
41A470403	Strip, terminal: 3-screw (FM ant conn on loop panel) .....
31K85348	Strip, terminal: 1 insulated lug, #2 mtg; 3/8" spacing .....
31K86126	Strip, terminal: 2 insulated lugs; #2 mtg; 3/8" spacing .....
31K470746	Strip, terminal: 3 insulated lugs, #2 mtg; 3/8" spacing .....
31K471568	Strip, terminal: 4 insulated lugs, #2 gnd; 3/8" spacing .....
31K470747	Strip, terminal: 5 insulated lugs; #3 mtg; 3/8" spacing .....
4A70015	Washer, 'C' (tuning shaft mtg)...
4S7554	Washer, flat: 3/8 x 1/8 x .033 steel; cad pl (tuning shaft brkt mtg)...
4S7557	Washer, flat: 3/8 x 11/64 x .033 stl; cad pl (dial plate brkt mtg).....
4S7582	Washer, flat: ½ x .195 x .033; cad pl (pointer drive pulley mtg)....
4K690812	Washer, shoulder: fibre (tuning shaft brkt mtg) .....
4K690571	Washer, shoulder: fibre (volume, tone and bandswitch mtg) .....
4K691959	Washer, shoulder: fibre (dial plate bracket mtg) .....

CABINET PARTS

42A470832	Clamp, cable: plastic (holds line cord)
13K790751	Escutcheon, radio dial (12VF4) .....
13K791032	Escutcheon, radio dial (12VF26) .....
13K792535	Escutcheon, radio dial (16F1) .....
14K790743	Insulator, chassis base: bakelite (under radio chassis) .....
14K791482	Insulator, fibre (clamps power and phono leads) .....
36K791432	Knob, control: tan (radio controls) (12VF4B) .....
36K691195	Knob, control: tan (radio controls) (12VF26B & 12VF26B-C) .....
36K792561	Knob, control: tan (radio controls) (16F1B) .....
36K691070	Knob, control: wal-mahogany (radio controls)(12VF4R & 12VF4R-C) .....
36K690886	Knob, control: wal-mahogany (radio controls)(12VF26R & 12VF26R-C) .....
36K792562	Knob, control: wal-mahogany (radio controls)(16F1) .....
2S7005	Nut, hex: 6-32 x 1/4 stl; cad pl (interlock plug mtg)(12VF26 & 16F1).
64C791006	Panel, cabinet back (covers radio, phono, and album compartments)(12VF4)
64C791659	Panel, cabinet back (covers radio, phono, and album compartments)(12VF26)
64C792544	Panel, cabinet back (covers radio, phono, and album compartments)(16F1)
3S490354	Screw, machine: 6-32 x 5/8 slotted hex head; cad pl (interlock plug mtg)(12VF26 & 16F1) .....
3S7439	Screw, sheet metal: #4 x ½ slotted acorn head; ant cop (loop panel mtg)(12VF4) .....
3S490453	Screw, sheet metal: #6 x 3/8 PKA plain acorn head; ant cop (cabinet back panel mtg)(12VF4) .....
3S7536	Screw, sheet metal: #6 x 3/8 PKA slotted acorn head; ant cop (cabinet back panel mtg)(16F1).....
3S3387	Screw, sheet metal: #6 x ½ PKA plain hex head; ant cop (loop panel mtg) (12VF26) .....
3S490454	Screw, sheet metal: #6 x 5/8 PKA plain acorn head; ant cop (cable clamp & cabinet back panel mtg)(12VF4 & 12VF26) .....
3S7509	Screw, sheet metal: #6 x 5/8 PKA slotted acorn head; ant cop (loop panel & cable clamp mtg)(16F1)...
3S490452	Screw, sheet metal: #8 x 3/8 PKA plain acorn head; ant cop (loop panel and interlock plug mtg)(12VF4 & 12VF26) .....
3S7457	Screw, sheet metal: #8 x 7/8 PKA plain hex head; cad pl (chassis mtg)....
4S1720	Washer, flat: 3/8 x .156 x .030 stl; cad pl (loop panel mtg)(12VF26).
4S7562	Washer, flat: 7/16 x .187 x .033 stl; cad pl (interlock plug mtg)(12VF26 & 16F1) .....
4S490412	Washer, flat: 11/16 x .156 x .031 stl; cad pl (chassis mtg) .....
4S7607	Washer, flat: 9/32 x .125 x .027 stl; cad pl (loop panel mtg)(12VF4)..

©John F. Rider
Compliments of www.nucow.com

CHASSIS HS-211, HS-230

RECEIVER MODELS

Model	Radio Chassis Used	Record Changer Used	TV Chassis Used
16VF8R	HS-211	M3RC	TS-16 series
16VF8B	HS-211	M3RC	TS-16 series
19F1	HS-230	RC-36	TS-67 series
19F1B	HS-230	RC-36	TS-67 series

RADIO CHASSIS - HS-211: Radio chassis HS-211 contains 9 tubes and receives both AM and FM broadcast programs. Except for common speakers, it operates entirely independently of the television receiver.

HS-230: Similar to chassis HS-211 except for the addition of a separate phono motor power switch, connected to the AM-FM-PHONO switch control shaft.

RADIO TUNING RANGE - AM -535 to 1620 Kc
FM - 88 to 108 Mc

RADIO IF FREQUENCIES - AM IF - 455 Kc
FM IF - 10.7 Mc

RADIO ANTENNAS - Separate AM and FM loop antennas, mounted in cabinet

SPEAKERS - Dual 12" PM and 5" PM, common to both radio and television chassis.

POWER SUPPLY - 117 volts, 60 cycle alternating current only

RADIO POWER CONSUMPTION - 100 watts, including phono motor

RADIO AUDIO OUTPUT - 8 watts

RADIO CHASSIS TUBE COMPLEMENT -

6AU6	- FM-AM RF Amplifier
6BA7	- FM-AM Converter
6BA6	- FM-AM IF Amplifier
6AU6	- FM IF Amplifier
6AL5	- FM Ratio Detector
6AV6	- AM Detector & 1st Audio Amp
6V6GT	- Power Amplifier
6V6GT	- Power Amplifier
7Z4	- Rectifier

INSTALLATION & OPERATING INSTRUCTIONS

ANTENNAS

No outside antenna or ground is normally required for standard broadcast (AM) reception, as a loop antenna is located inside the cabinet. Antenna connections are shown in Figure 1. In locations where additional pick-up is desired, an external antenna may be connected to the clip marked "EXT BC ANT" on the loop antenna.

An FM loop antenna, mounted inside the cabinet, eliminates the need for an external FM antenna when the receiver is used in normal FM service areas such as are found in and for a few miles around metropolitan areas.

In "fringe" or weak signal areas, improved FM reception can be obtained by using an outside FM antenna. The loop connections should be removed from the terminal strip on the rear of the chassis and the outside antenna should be connected, through a 300 ohm twin transmission line, to the terminal strip, as shown in Figure 1. Orient the antenna to obtain maximum volume of the FM stations.

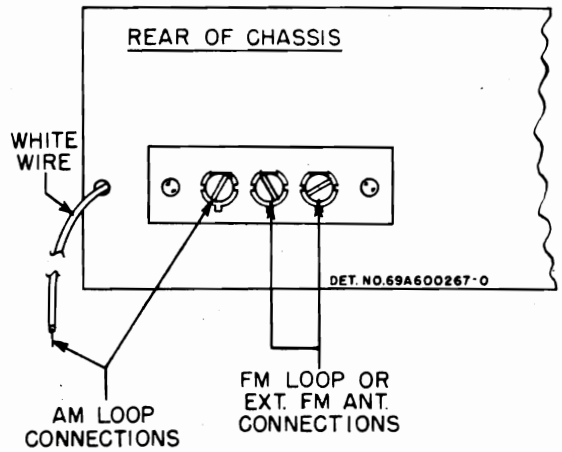

FIGURE 1. EXTERNAL ANTENNA CONNECTIONS

©John F. Rider

Compliments of www.nucow.com

CHASSIS HS-211,
HS-230

CONTROLS

Refer to Figure 2 for the location of the radio controls.

POWER SWITCH AND VOLUME CONTROL. The volume control and power switch for both radio and phonograph operation are combined and are operated with the extreme left-hand knob. **CAUTION:** The power switches on the AM-FM radio and on the television receiver are independent. Make sure both are turned off when the set is not in use.

TONE CONTROL. Tone is varied by adjusting the second knob from the left.

AM-FM-PHONO SWITCH. The third control from the left operates a three-position switch. The extreme counterclockwise position selects the AM (Standard Broadcast) band, the center position selects the FM (Frequency Modulation) band, and the extreme clockwise position is used for phonograph operation. **NOTE:** On the 19F1 model, rotating the control to the "PHONO" position also starts the phono motor, whereas model 16VF8 has a separate power switch on the record changer itself.

TUNING CONTROL. The extreme right-hand control selects the desired FM or AM station. The standard broadcast scale (AM) is read in kilocycles by adding one '0' to the figures. The frequency modulation scale (FM) is read in megacycles (88 to 108).

Tuning of FM stations should be done very carefully, for best sound reproduction, not necessarily for strongest volume received.

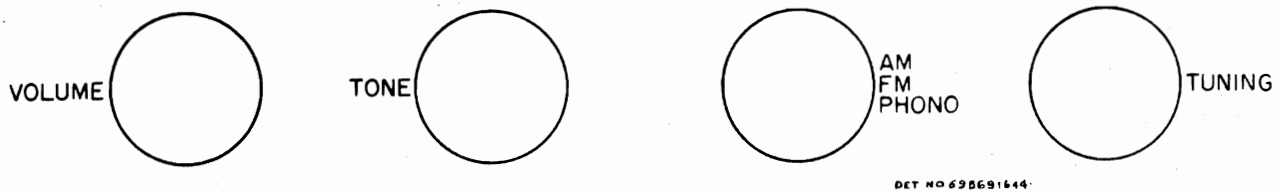

FIGURE 2. RADIO CONTROLS

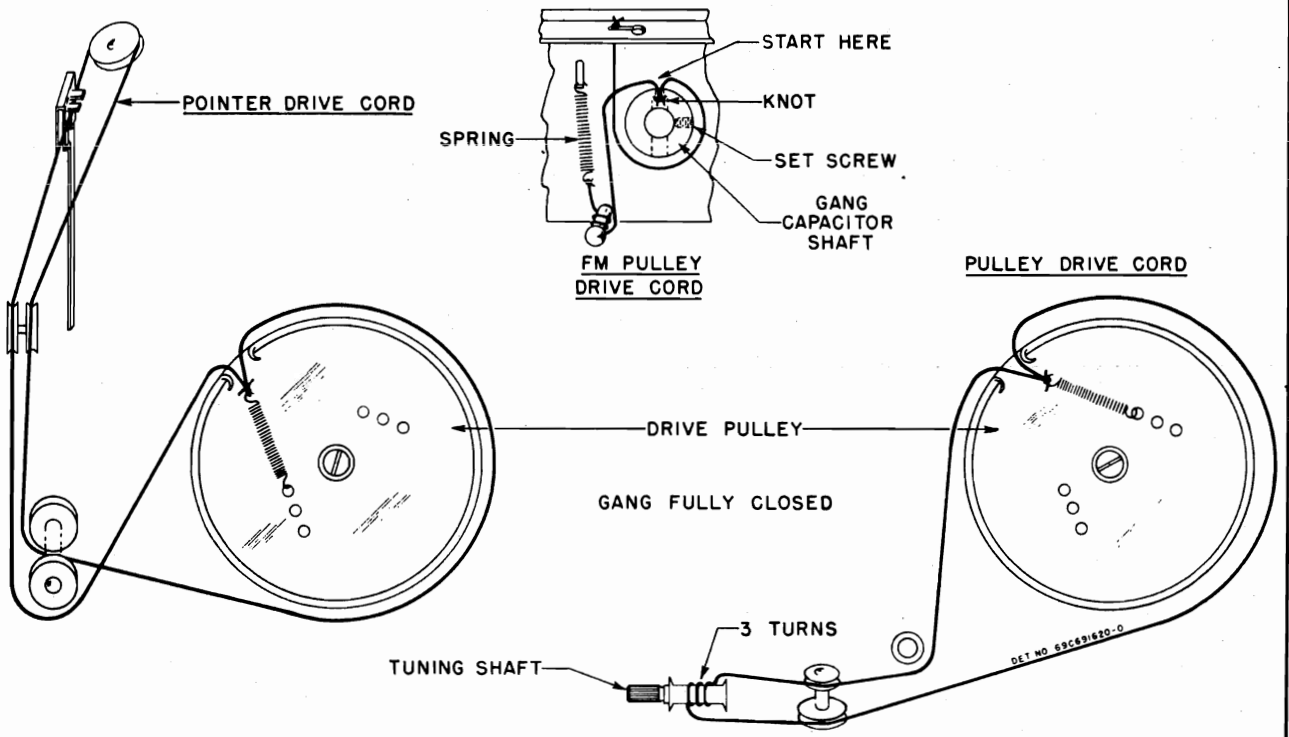

FIGURE 3. STRING DRIVE DETAIL

©John F. Rider

Compliments of www.nucow.com

CHASSIS HS-211, HS-230

SERVICE NOTE

TO REMOVE RADIO CHASSIS FROM CABINET

1. Pull off the four radio knobs on the front of the cabinet.

2. Remove the AC power plug from the receptacle attached to the cabinet.

3. Remove the large panel covering the rear of the cabinet.

4. Disconnect the AM and FM loop leads from the receiver.

5. Disconnect the phono power plug from the chassis.

6. Disconnect the speaker leads.

7. Remove the three chassis mounting screws.

8. Slide the chassis from the cabinet.

ALIGNMENT

GENERAL INFORMATION

1. Maximum performance can be obtained only if extreme care is exercised during alignment.

2. Use a small fibre screwdriver for aligning the IF transformers.

3. Refer to Figure 4 for the location of all alignment trimmers and cores.

4. As the stages are brought into alignment, reduce the signal generator output to a low value to avoid overloading the receiver.

ORDER OF ALIGNMENT AND EQUIPMENT REQUIRED

1. Broadcast Band IF & RF Alignment
   a. 455 to 1620 Kc AM Signal Generator
   b. Low range output meter

2 (A) FM Band IF & RF Alignment (Preferred Method)
   a. 10.7 to 108 Mc FM signal generator
   b. Oscilloscope

(B) FM Band IF & RF Alignment (Alternate Method)
   a. 10.7 to 108 Mc signal generator (unmod.)
   b. Low range DC electronic voltmeter.

BROADCAST BAND - IF & RF ALIGNMENT

1. With the gang fully closed, adjust the pointer to coincide with the calibration marks at the left of the "55" on the dial scale.

2. Connect the AM signal generator as in chart below, with 400 cycle, 30% modulation.

3. Connect the output meter across the speaker voice coil. Throughout alignment reduce the generator output to a level which produces less than 1.27 volts (.5 watt) across the voice coil, to avoid overloading the receiver.

4. Set the bandswitch to the AM position.

5. Turn the receiver volume control to maximum.

6. Proceed as shown in the following chart.

STEP	DUMMY ANTENNA	GENERATOR CONNECTION	GENERATOR FREQUENCY	GANG SETTING	ADJUST	REMARKS
IF ALIGNMENT						
1.	.1 mf	Grid of conv. V-2 (pin 7, 6BA7)	455 Kc	Fully opened	1, 2, 3, & 4 (IF cores)	Adjust for maximum.
RF ALIGNMENT						
2.	.1 mf	Grid of conv. V-2 (pin 7, 6BA7)	1620 Kc	Fully opened	5 (AM osc)	Adjust for maximum.
3.	.1 mf	Grid of conv. V-2 (pin 7, 6BA7)	1400 Kc	Tune in signal	6 (AM RF)	Adjust for maximum.
4.	-	-	-	-	-	Connect AM loop to chassis.
5.	-	Across radiation loop*	1400 Kc	Tune in signal	7 (AM ant)	Adjust for maximum.

*Connect generator output across 5" diameter, 5 turn loop and couple inductively to receiver loop. Keep loops at least 12" apart.

©John F. Rider

Compliments of www.nucow.com

CHASSIS HS-211,
HS-230

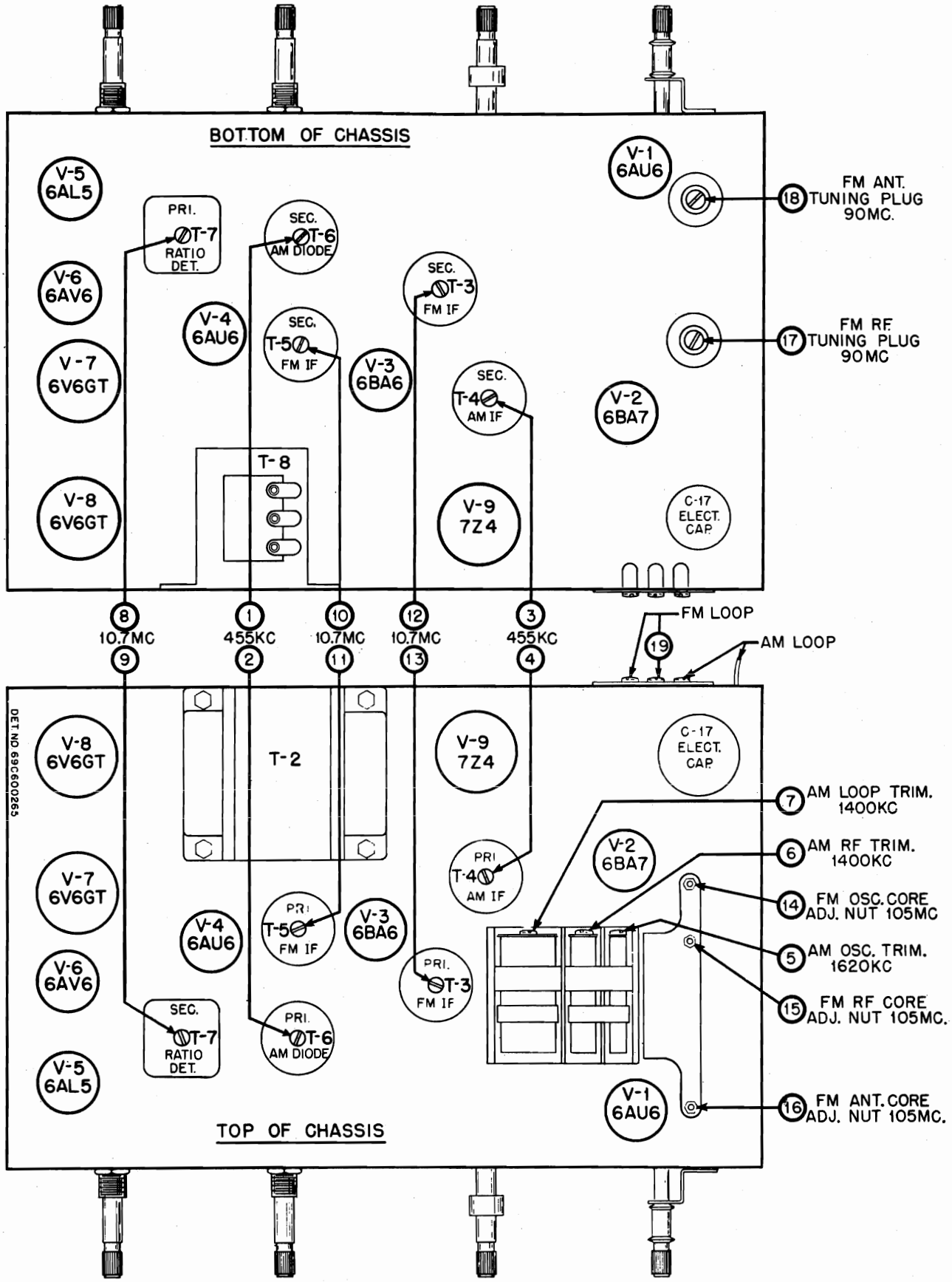

FIGURE 4. TUBE & TRIMMER LOCATIONS

©John F. Rider

Compliments of www.nucow.com

CHASSIS HS-211, HS-230

FM BAND - IF & RF ALIGNMENT (PREFERRED METHOD)

1. The following FM alignment procedure, using an FM signal generator and an oscilloscope, is to be preferred because the actual response pattern may be observed on the scope and adjusted for best symmetry and maximum amplitude.

2. Connect the vertical input terminals of the oscilloscope between the chassis and the junction of resistor R-17 (47K) and capacitor C-21 (1000 mmf).

3. Connect the FM signal generator sync voltage output terminals, through a phase shifting network, to the horizontal input terminals of the scope, as in Figure 5. (Other values of resistance and capacitance may be required, depending upon the scope). The phasing control should be adjusted to give only one trace on the scope. **NOTE:** If the FM generator has a built-in phase control, the phase shifting network is not necessary.

4. Set the bandswitch to the FM position.

5. Throughout alignment, reduce the generator output to keep the signal just above the noise level, to avoid overloading the receiver.

6. Proceed as shown in the following chart.

STEP	DUMMY ANTENNA	GENERATOR CONNECTION	GENERATOR FREQUENCY	TUNER SETTING	ADJUST	REMARKS
IF ALIGNMENT						
1.	1000 mmf	Grid of 2nd IF Amp V-4 (pin 1, 6AU6)	10.7 mc ±100 Kc dev.	Fully opened	8 (ratio det pri)	Adjust for maximum amplitude of pattern.*
2.	1000 mmf	Grid of 2nd IF Amp V-4 (pin 1, 6AU6)	10.7 mc ±100 Kc dev.	Fully opened	9 (ratio det sec)	Adjust for symmetrical curve, as shown in Figure 6.
3.	-	-	-	-	-	Repeat steps 1 & 2 for maximum amplitude and best symmetry.
4.	1000 mmf	Grid of 1st IF Amp V-3 (pin 1, 6BA6)	10.7 mc ±100 Kc dev.	Fully opened	10 & 11 (2nd IF sec & pri)	Adjust for maximum amplitude of pattern.*
5.	1000 mmf	Grid of conv. V-2 (pin 7, 6BA7)	10.7 mc ±100 Kc dev.	Fully opened	12 & 13 (1st IF sec & pri)	Adjust for maximum amplitude of pattern.*
6.	1000 mmf	Grid of conv. V-2(pin 7, 6BA7)	10.7 mc ±100 Kc dev.	Fully opened	10, 11 12 & 13	Readjust for maximum amplitude and best symmetry.
RF ALIGNMENT						
7.	270 ohms	FM terminal 19 on rear of chassis	105 mc ±22½ Kc dev.	105 mc on dial	14 (osc core)	Adjust for maximum amplitude of pattern.*
8.	-	-	-	Fully closed	15 & 16 (RF & ant cores)	Turn counterclockwise until cores are at bottom of pipe, then turn two turns clockwise.
9.	270 ohms	FM terminal 19 on rear of chassis	90 mc ±22½ kc dev.	Tune in signal	17 & 18 (RF & ant tuning plugs)	Adjust for maximum amplitude of pattern.*
10.	270 ohms	FM terminal 19 on rear of	105 mc ±22½ kc dev.	Tune in signal	15 & 16 (RF & ant cores)	Adjust for maximum amplitude of pattern.*
11.	-	-	-	-	-	Repeat steps 9 & 10 until no further adjustment is necessary.

An output meter across the speaker voice coil will also indicate maximum amplitude. It should not be used in place of the scope, however, since it will not show symmetry of the curve.

©John F. Rider

Compliments of www.nucow.com

CHASSIS HS-211,
HS-230

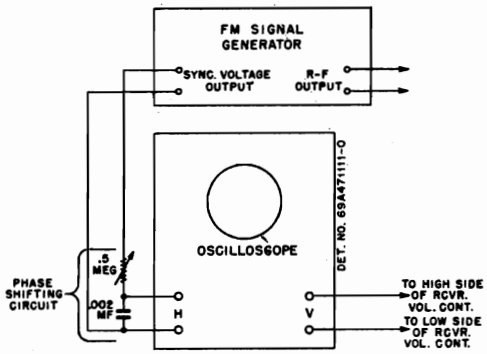

FIGURE 5.

FM SIGNAL GENERATOR & OSCILLOSCOPE HOOK-UP

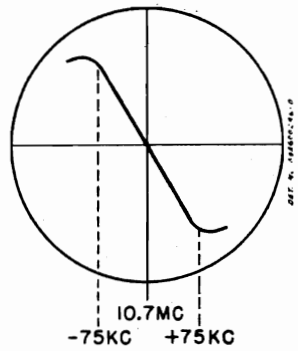

FIGURE 6.

RATIO DETECTOR WAVEFORM

FM BAND - IF & RF ALIGNMENT (ALTERNATE METHOD)

1. The following procedure for FM alignment, with an unmodulated carrier generator and a DC electronic voltmeter, is not as desirable as the preceding method; but it may be used if no FM generator is available.

2. Connect the signal generator as in chart below, with no modulation.

3. Set the bandswitch to the FM position.

4. Except in step 2 below, connect the electronic voltmeter across resistor R-21 (33K) in the ratio detector stage.

5. Throughout alignment reduce the signal generator output to a value which produces no more than a 5 volt rise above no signal voltage, to avoid overloading the receiver.

6. In step 2 below, connect two 100K ohm resistors in series across R-21. Connect the electronic voltmeter between the volume control side of resistor R-17 (47K) and the junction of the two 100K resistors, with the low side of the meter at the 100K resistors.

7. Proceed as shown in the following chart.

STEP	DUMMY ANTENNA	GENERATOR CONNECTION	GENERATOR FREQUENCY	TUNER SETTING	ADJUST	REMARKS
IF ALIGNMENT						
1.	1000 mmf	Grid of conv. V-2 (pin 7, 6BA7)	10.7 mc	Fully opened	8, 10, 11, 12 & 13 (IF cores)	Adjust for maximum.
2	1000 mmf	Grid of conv. V-2 (pin 7, 6BA7)	10.7 mc	Fully opened	9 (ratio det sec)	Adjust for zero. (Connect meter as in step 6 above)
RF ALIGNMENT						
3.	270 ohms	FM terminal 19 on rear of chassis	105 mc	105 mc on dial	14 (osc core)	Adjust for maximum.
4.	-	-	-	Fully closed	15 & 16 (RF & ant cores)	Turn counterclockwise until cores are at bottom of pipe, then turn two turns clockwise.
5.	270 ohms	FM terminal 19 on rear of chassis	90 mc	Tune in signal	17 & 18 (RF & ant tuning plugs)	Adjust for maximum.
6.	270 ohms	FM terminal 19 on rear of chassis	105 mc	Tune in signal	15 & 16 (RF & ant cores)	Adjust for maximum.
7.	-	-	-	-	-	Repeat steps 5 & 6 until no further adjustment is necessary.

©John F. Rider

Compliments of www.nucow.com

CHASSIS HS-211,
HS-230

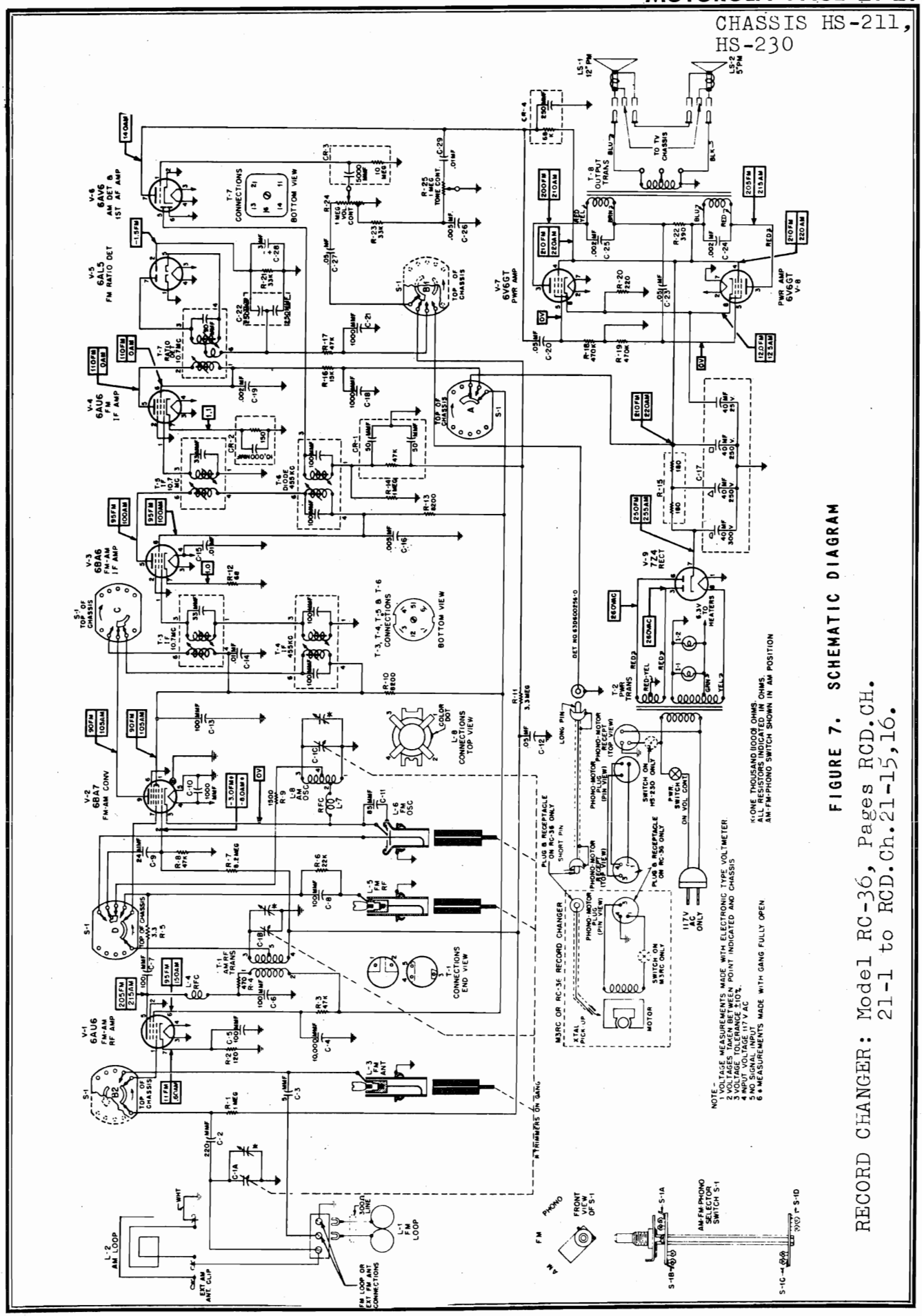

FIGURE 7. SCHEMATIC DIAGRAM

RECORD CHANGER: Model RC-36, Pages RCD.CH.
21-1 to RCD.Ch.21-15,16.

©John F. Rider

Compliments of www.nucow.com

CHASSIS HS-211,
HS-230

REPLACEMENT PARTS LIST

REF. NO.	PART NO.	DESCRIPTION
CHASSIS PARTS - ELECTRICAL		
CAPACITORS		
C-1	19B690978	Variable, 3 gang .....
C-2	21K77375	Ceramic: 220 mmf 500V .....
C-3	21K70720	Ceramic: 5 mmf 500V .....
C-4	21K482726	Ceramic, disc type: 10,000 mmf 450V .....
C-5	21B77286	Ceramic: 100 mmf 500V .....
C-6	21B77286	Ceramic: 100 mmf 500V .....
C-7	21B77286	Ceramic: 100 mmf 500V .....
C-8	21R6554	Mica: 100 mmf 10% 500V .....
C-9	21K28816	Ceramic: 24 mmf 500V .....
C-10	21K478410	Ceramic: 1000 mmf 500V .....
C-11	21K691203	Ceramic: 85 mmf 500V .....
C-12	8R9821	Paper: .05 mf 200V .....
C-13	21B77286	Ceramic: 100 mmf 500V .....
C-14	8R9809	Paper: .01 mf 400V .....
C-15	8R9809	Paper: .01 mf 400V .....
C-16	8R9813	Paper: .005 mf 600V .....
C-17	23B690975	Electrolytic: 40 mf/300V, 40-40 mf/250V, 40 mf/25V..... ....
C-18	21K478410	Ceramic: 1000 mmf 500V .....
C-19	8R9824	Paper: .002 mf 400V .....
C-20	8K470606	Paper: .05 mf 400V .....
C-21	21K478410	Ceramic: 1000 mmf 500V .....
C-22	21B484337	Ceramic: dual; 250-250 mmf/450V.
C-23	8K470606	Paper: .05 mf 400V .....
C-24	8R9824	Paper: .002 mf 400V .....
C-25	8R9824	Paper: .002 mf 400V .....
C-26	8R9813	Paper: .005 mf 600V .....
C-27	8R9821	Paper: .05 mf 200V .....
C-28	23K690543	Electrolytic: 3 mf 50V .....
C-29	8R9809	Paper: .01 mf 400V .....
CAPACITOR-RESISTOR		
CR-1	21K690980	Capacitor-Resistor: 50 mmf-50 mmf 47,000 ohms .....
CR-2	21K680007	Capacitor-Resistor: 10,000 mmf 150 ohms .....
CR-3	21K691125	Capacitor-Resistor: 5000 mmf 10 meg .....
CR-4	21K690979	Capacitor-Resistor: 250 mmf 68,000 ohms .....
DIAL LIGHT		
I-1, I-2	65X11854	Bulb, dial light: #47; 6-8V; .15 amp; clear; bayonet base .....
COILS		
L-1	24K690985	FM Loop antenna: with lead.....
L-2	24C690896	AM Loop antenna .....
L-3	24C690584	Inductor and Capacitor Assembly: FM antenna: less tuning core...
L-4	24A484025	RF choke .....
L-5	24C690584	Inductor and Capacitor Assembly: FM RF; less tuning core .....
L-6	24K690996	Inductor and Capacitor Assembly: FM oscillator; less tuning core
L-7	24K780128	RF choke: insulated .....
L-8	24B690976	AM oscillator coil .....

REF. NO.	PART NO.	DESCRIPTION
SPEAKERS		
LS-1	50C791631	Speaker: 12" PM; 3.2 ohm VC
LS-2	50C790701 or 50C791430	Speaker: 5" PM; 3.2 ohm VC.
RESISTORS		
		Note: All resistors are carbon insulated type unless otherwise specified.
R-1	6R6004	1 meg 20% ½W .....
R-2	6R5551	120 10% ½W .....
R-3	6R6048	47,000 10% ½W .....
R-4	6R3949	470 20% ½W .....
R-5	6R490131	3.3 10% ½W .....
R-6	6R6028	22,000 20% ½W .....
R-7	6R5585	8.2 meg 10% ½W .....
R-8	6R6048	47,000 10% ½W .....
R-9	6R6038	1500 10% ½W .....
R-10	6R5725	8200 10% 2W .....
R-11	6R6497	3.3 meg 10% ½W .....
R-12	6R2039	68 10% ½W .....
R-13	6R5725	8200 10% 2W .....
R-14	6R6046	1 meg 10% ½W .....
R-15	17A690973	Wirewound: 360 10% 3W; center tapped .....
R-16	6R6431	15,000 10% 1W .....
R-17	6R6056	47,000 20% ½W .....
R-18	6R6032	470,000 20% ½W .....
R-19	6R6032	470,000 20% ½W .....
R-20	6R6389	220 10% 1W.....
R-21	6R6410	33,000 10% ½W .....
R-22	6R5598	390 10% 1W .....
R-23	6R6012	33,000 20% ½W .....
R-24	18K691192	Volume Control: 1 meg; tapped at 300,000 ohms; includes on-off switch .....
R-25	18K77399	Tone Control: 1 meg .....
SWITCHES		
S-1	40B690977	Band Switch: AM-FM-PHONO.....
S-2	-	On-off Switch (on volume control)
S-3	40A691922	Phono-Radio-Switch; SPST (HS-234)
TRANSFORMERS		
T-1	24B690899	AM RF Transformer .....
T-2	25B691035	Power Transformer .....
T-3	24B690540	1st FM IF Transformer (orange dot): 10.7 mc; complete with capacitor and cores; less shield
T-4	24B482863	AM IF Transformer (brown dot): 455 Kc: complete with capacitors and cores; less shield....
T-5	24B690541	2nd FM IF Transformer (yellow dot): 10.7 mc; complete with capacitor and cores; less shield
T-6	24B482865	AM Diode Transformer (red dot): 455 Kc: complete with capacitors and cores; less shield....
T-7	24B690542	Ratio Detector Transformer: 10.7 mc: complete with capacitors, cores and shield.....
T-8	25B690898	Audio Output Transformer.....

©John F. Rider

Compliments of www.nucow.com

CHASSIS PARTS - MECHANICAL

PART NUMBER	DESCRIPTION
1X690717	Bracket Assembly, tuning core mtg: includes shoulder rivet and single anti-backlash clip
1X691127	Bracket & Pullies Assembly: includes two pullies and shoulder rivet (cord guides on chassis front)
7C690567	Bracket, tuner mtg (gang mtg)
7A77337	Bracket, tuning shaft
43K890398	Bushing, line cord retainer (use with 43A890397)
43A890397	Bushing, line cord strain relief (use with 43K890398)
42A690560	Clip, anti-backlash: double (on tuner mounting brkt)
42K690561	Clip, anti-backlash: single (on core mtg brkt)
42B482867	Clip, spring: blued finish (holds IF transformer)
11M488137	Cord, dial (core drive)
11M8944	Cord, dial (pointer drive)
30K21859	Cord, line: with plug: 9 ft long
46B692164	Core, iron and screw: green dot (FM osc tuning core)
46K692165	Core, iron and screw (FM RF and ant tuning core)
34C690897	Dial scale: glass
1X691136	Dial Scale and Plate Assembly: complete with cord pulleys
5S7866	Eyelet: .125 x .091; brass; nkl pl (core drive cord retainer)
1X600081	Link Assembly, bandswitch actuating: complete with bushings; less setscrews
4S9751	Lockwasher, int-ext: #8; cad pl (pointer drive pulley mtg)
2S7019	Nut, hex: 4-40 x 1/4; cad pl (FM tuning core mtg)
2S7051	Nut, hex palnut: 3/8-32 x 9/16; cad pl (bandswitch, tone and volume control mtg)
52B481704	Pointer, dial
49A21741	Pulley, cord: 3/8" groove (on chassis front)
49A73807	Pulley, cord: 1/2" groove (on chassis side and on dial plate)
49A26433	Pulley, cord: 21/32" groove (on chassis front)
49A690562	Pulley, core drive: brass
1K691145	Pulley, pointer drive: 3-1/2" diameter
9K592170	Receptacle, phono pick-up: 1 prong
9A27674	Receptacle, phono power: 3-prong
5S8497	Rivet: .088 x 1/8 stl; nkl pl (single anti-backlash clip mtg)
5S7771	Rivet: .088 x 3/16; stl; nkl pl (min and midget tube socket mtg)
5S7707	Rivet: .122 x 5/32; stl; nkl pl (loctal tube socket, terminal strip, output transformer mtg)
5S7701	Rivet: .122 x 3/16 stl; nkl pl (power receptacle, ant term strip, and tuning shaft bracket mtg)
5S7700	Rivet: .122 x 1/4; stl; nkl pl (octal tube socket mtg)
5K13896	Rivet, shoulder (tuning core cord guide and pulley mtg on front of chassis)
5K71246	Rivet, shoulder (pulley mtg on side of chassis and on left side of dial plate)
5K481770	Rivet, shoulder (for double pullies on dial plate)
3S7462	Screw, machine: 6-32 x 3/16 plain hex head; cad pl (electrostatic shield mtg)
3S7326	Screw, machine: 8-32 x 3/16 plain locking hex head; cad pl (gang mtg)
3S7163	Screw, machine: 8-32 x 1/4 plain hex head; cad pl (pointer drive pulley mtg)
3S2695	Screw, sheet metal: #6 x 3/16 PKZ plain hex head; cad pl (tuner brkt mtg)
3S7454	Screw, sheet metal: #8 x 1/4 PKZ plain hex head; cad pl (dial plate assembly mtg)
3S7475	Screw, sheet metal: #8 x 1/4 PKZ slotted acorn head; cad pl (power trans mtg)
3S7103	Setscrew: 8-32 x 1/8 Allen head; cad pl (core drive pulley mtg)
3S7113	Setscrew: 8-32 x 1/4 slab head; cad pl (bandswitch link assembly mtg).
47A690893	Shaft, bandswitch actuating (HS-211)
1X691134	Shaft, tuning: complete with pulley
26K485936	Shield, coil: for IF transformers
26A470013	Shield, dial light
26K690984	Shield, electrostatic (gang shield)
26K690981	Shield, tube: spring type
26A692080	Shield, tube (for V-9)
9K471935	Socket, dial light: includes brkt
9A72519	Socket, tube: loctal
9A690129	Socket, tube: midget; 7 prong (for V-1)
9K484167	Socket, tube: miniature; 7 prong
9A485495	Socket, tube: noval; 9-prong
9A76209	Socket, tube: octal
41A690598	Spring, coil: 7 turns; cosmoline dipped (FM RF & ant core mtg)
41K691840	Spring, coil: 8 turns; copper plated (FM osc core mtg)
41A14244	Spring, tension (core & pointer drive cord)
41K692081	Spring, tube shield retaining (for V-9 shield)
37K21114	Strip, channel: rubber; 1" long (dial scale mtg)
31K37504	Strip, terminal: 1 insulated lug; #1 mtg; 3/8" spacing
31K51251	Strip, terminal: 1 insulated lug, #1 gnd; 3/8" spacing
31K471565	Strip, terminal: 3 insulated lugs, #4 gnd; 3/8" spacing
31A690974	Strip, terminal: 7 insulated lugs, #4 & 9 gnd; 3/8" spacing
31K471498	Strip, terminal: 3-screw (antenna input)
29K5412	Terminal, plain pin (on speaker leads)
4A70015	Washer, 'C' (tuning shaft retainer)

CABINET PARTS

PART NUMBER	DESCRIPTION
39K17396	Contact, pin terminal (in molded phono motor receptacle)(19F1)
13C791478	Escutcheon, radio dial: brass
5A71081	Eyelet (radio chassis mtg)
5A71092	Grommet, rubber (radio chassis mtg)
14K791482	Insulator, fibre (clamps phono and antenna leads)
36B790569	Knob, control: no dot; beige plastic (radio controls)
36K791630	Knob, control: with dot; beige plastic (radio controls)
1X792530	Lead and Plugs Assembly, phono pick-up (shielded lead with two phono pick-up plugs)(19F1)
64D791510	Panel, cabinet back: fibre (covers radio and phono compartments)(16VF8)
64K792522	Panel, cabinet back: fibre (covers radio and phono compartments)(19F1)
28K71775	Plug, phono pick-up (short plug on phono lead)(19F1)
28K22183	Plug, phono pick-up (long plug on phono lead)(19F1)
28K30736	Plug, phono motor: 3-pin; includes shell (on phono motor lead)
9K470402	Receptacle, phono motor: 5-prong; molded; includes contacts (19F1)
9A600040	Receptacle, phono motor: 3-prong; includes shell (19F1)
3S7536	Screw, sheet metal: #6 x 3/8 PKA slotted acorn head; antique copper finish (cabinet back panel mtg).
3S7534	Screw, sheet metal: #8 x 1-3/8 PKA plain hex head; cad pl (radio chassis mtg)
15K74443	Shell, plug (on 28K30736 phono motor plug)
15A690616	Shell, receptacle (on 9A600040 phono motor receptacle)(19F1)
4S490513	Washer, flat: 3/4 x 7/32 x .042 stl; cad pl (radio chassis mtg)

© John F. Rider

Compliments of www.nucow.com

CHASSIS HS-253

USED WITH TV MODELS 17F1 Series 17F2 Series 17F3 Series 17F4 Series

GENERAL INFORMATION

POWER SUPPLY - 117 volts, 60 cycle alternating current only.

RADIO CHASSIS - Radio chassis HS-253 contains 8 tubes and receives both AM and FM broadcast programs. Except for common speakers, it operates entirely independently of the television receiver.

RADIO TUNING RANGE - AM 535 to 1620 Kc
FM 88 to 108 Mc

RADIO IF FREQUENCIES - AM IF - 455 Kc
FM IF - 10.7 Mc

RADIO ANTENNAS - AM: Loop antenna mounted in cabinet.
FM: Built into the power cord, with terminals for connection of an external antenna, if required.

SPEAKER - PM type, common to both radio and television chassis.

RADIO POWER CONSUMPTION - 85 watts, including phono motor.

RADIO AUDIO OUTPUT - 3 watts

RADIO CHASSIS TUBE COMPLEMENT -

6BA6	-	FM-AM RF Amplifier
6BA7	-	FM-AM Converter
6BA6	-	FM-AM IF Amplifier
6BA6	-	FM IF Amplifier
6AL5	-	FM Ratio Detector
6AV6	-	AM Detector & 1st Audio Amp
6K6GT	-	Power Amplifier
5Y3GT	-	Rectifier

INSTALLATION & OPERATING INSTRUCTIONS

ANTENNAS

No outside antenna or ground is normally required for standard broadcast (AM) reception, as a loop antenna is located inside the cabinet. Antenna connections are shown in Figure 1. In locations where additional pick-up is desired, an external antenna may be connected to the clip marked "EXT BC ANT" on the loop antenna.

An FM antenna, built into the power cord, eliminates the need for an external FM antenna when the receiver is used in normal FM service areas, such as are found in and for a few miles around metropolitan areas. In "fringe" or weak signal areas, improved FM reception can be obtained by using an outside FM antenna. The external antenna should be connected through a 300 ohm twin transmission line to the 1st & 2nd screws on the terminal strip on the chassis, as in Figure 1. The link between the 2nd & 3rd screws should be opened. Orient the antenna to obtain maximum volume of the FM stations.

For best FM reception from the built-in power line cord antenna, it is important to stretch the cord to its full length. Changing the direction or position of the line cord, or reversing the plug in the wall outlet, will often improve reception from weak stations. Connect the link between the 2nd & 3rd screws on the terminal strip on the chassis when the built-in antenna is used.

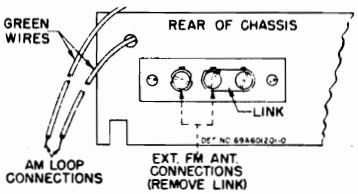

FIGURE 1.
ANTENNA CONNECTIONS

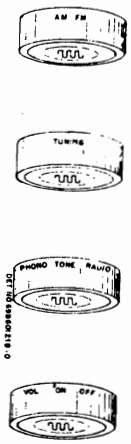

FIGURE 2.
OPERATING CONTROLS

CONTROLS

Refer to Figure 2 for the locations of the radio operating controls.

Power for both the radio and the record changer is controlled by the VOL-ON-OFF knob. The phonograph motor will not operate, however, until the PHONO-TONE-RADIO knob is rotated also to "PHONO". CAUTION: The power switches on the AM-FM radio and on the television receiver are independent. Make sure both are turned off when the set is not in use.

Tuning of FM stations should be done very carefully, for best sound reproduction, not necessarily for the strongest volume received.

ALIGNMENT

GENERAL INFORMATION

1. Maximum performance can be obtained only if extreme care is exercised during alignment.
2. Use a small fibre screwdriver for aligning the IF transformers.
3. Refer to Figure 4 for the location of all alignment trimmers and cores.
4. As the stages are brought into alignment, reduce the signal generator output to a low value to avoid overloading the receiver.

©John F. Rider

Compliments of www.nucow.com

ORDER OF ALIGNMENT AND EQUIPMENT REQUIRED

1. AM Broadcast Band IF & RF Alignment
   a. 455 to 1620 Kc AM Signal Generator
   b. Low range output meter

2(A) FM Band IF & RF Alignment (preferred method)
   a. 10.7 to 108 Mc FM signal generator
   b. Oscilloscope

(B) FM Band IF & RF Alignment (alternate method)
   a. 10.7 to 108 Mc signal generator (unmodulated)
   b. Low range DC electronic voltmeter.

AM BROADCAST BAND - IF & RF ALIGNMENT

1. With the gang fully closed, adjust the pointer to coincide with the bottom of the "55" on the dial scale. See Figure 3.

2. Connect the AM signal generator as in chart below, with 400 cycle, 30% modulation.

3. Connect the output meter across the speaker voice coil. Throughout alignment reduce the generator output to a level which produces less than 1.27 volts (.5 watt) across the voice coil, to avoid overloading the receiver.

4. Set the bandswitch to the AM position.

5. Turn the receiver volume control to maximum.

6. Proceed as shown in the following chart.

FIGURE 3. DIAL RESTRINGING DETAIL

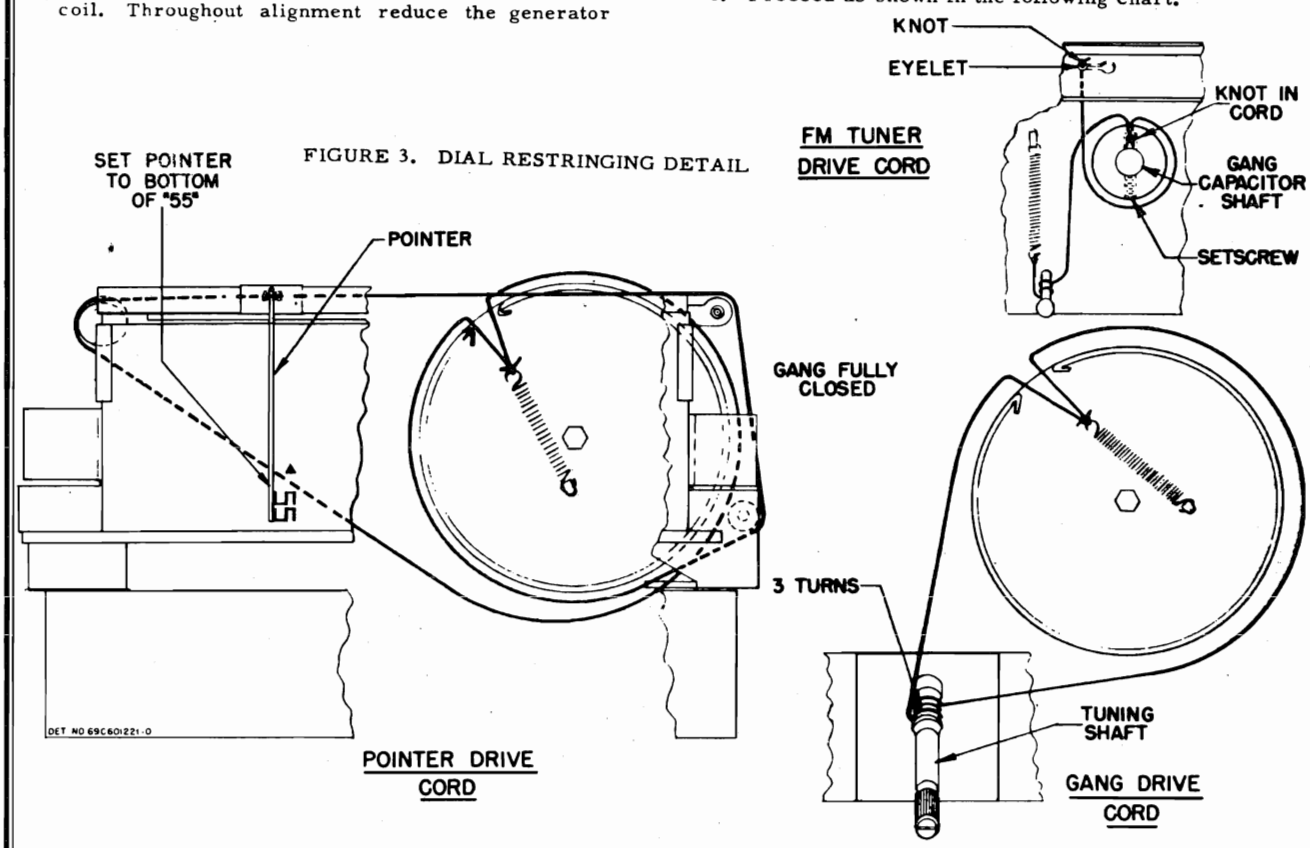

STEP	DUMMY ANTENNA	GENERATOR CONNECTION	GENERATOR FREQUENCY	GANG SETTING	ADJUST	REMARKS
IF ALIGNMENT						
1.	.1 mf	Grid of conv. V-2 (pin 7, 6BA7)	455 Kc	Fully opened	1, 2, 3, & 4 (IF cores)	Adjust for maximum.
RF ALIGNMENT						
2.	.1 mf	Grid of conv. V-2 (pin 7, 6BA7)	1620 Kc	Fully opened	5 (AM osc)	Adjust for maximum. *
3.	-	-	-	-	-	Connect AM loop to chassis.
4.	-	Across radiation loop**	1400 Kc	Tune in signal	8 (AM ant)	Adjust for maximum.

©John F. Rider

Compliments of www.nucow.com

CHASSIS HS-253

5. If, after the receiver has been aligned as above, it is found to be badly off calibration, it will be necessary to adjust oscillator core (7) as follows: connect the generator to the grid of the converter tube and, with the gang fully closed, adjust core (7) at 535 kc. It is advisable to repeat the oscillator adjustments at 1620 kc and 535 kc several times until the tuning range is correct. Core (7) has been pre-set at the factory and normally should require no retuning.

* If, difficulty is encountered in tuning trimmer (5), adjust trimmer (6) to 1/2 turn from tight.

** Connect generator output across 5" diameter, 5 turn loop and couple inductively to receiver loop. Keep loops at least 12" apart.

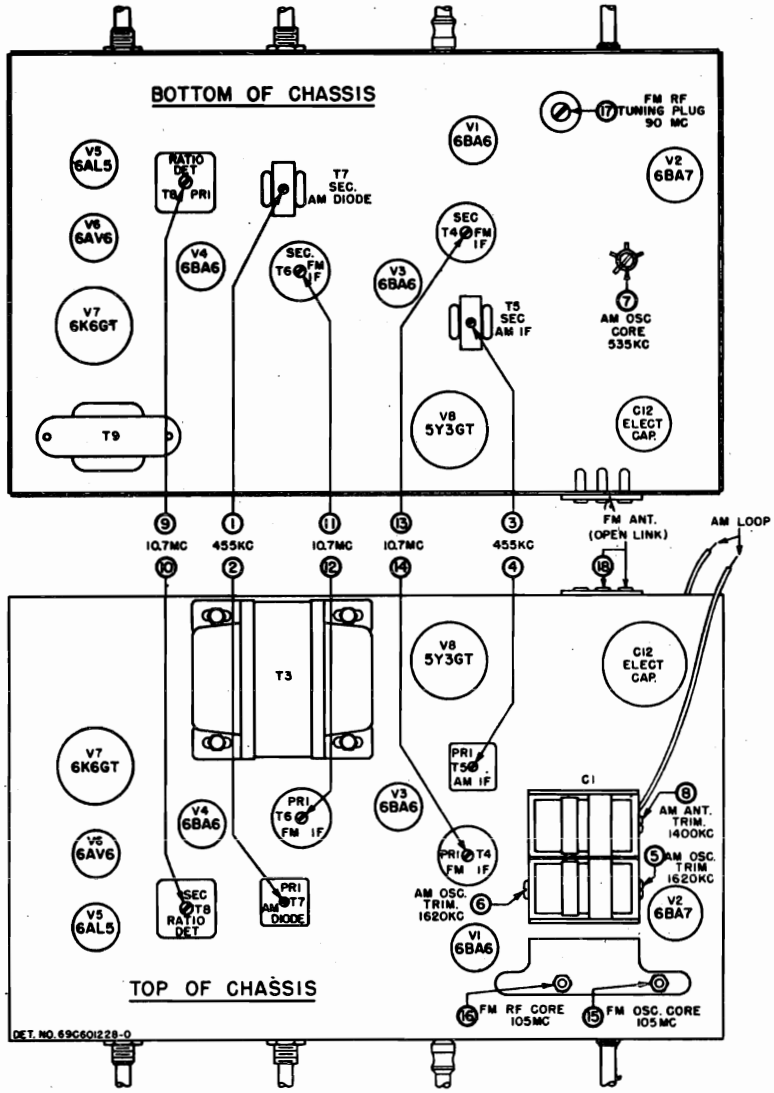

FIGURE 4.
TUBE & TRIMMER LOCATIONS

FM BAND - IF & RF ALIGNMENT (PREFERRED METHOD)

1. The following FM alignment procedure, using an FM signal generator and an oscilloscope, is to be preferred because the actual response pattern may be observed on the scope and adjusted for best symmetry and maximum amplitude.

2. Connect the vertical input terminals of the oscilloscope between the chassis and the junction of resistor R-18 (47K) and capacitor C-23 (1000 mmf).

3. Connect the FM signal generator sync voltage output terminals, through a phase shifting network, to the horizontal input terminals of the scope, as in Figure 5. (Other values of resistance and capacitance may be required, depending upon the scope). The phasing control should be adjusted to give only one trace on the scope. NOTE: If the FM generator has a built-in phase control, the phase shifting network is not necessary.

4. Set the bandswitch to the FM position.

5. Throughout alignment, reduce the generator output to keep the signal just above the noise level, to avoid overloading the receiver.

6. Proceed as shown in the following chart.

©John F. Rider

Compliments of www.nucow.com

STEP	DUMMY ANTENNA	GENERATOR CONNECTION	GENERATOR FREQUENCY	TUNER SETTING	ADJUST	REMARKS
IF ALIGNMENT						
1.	1000 mmf	Grid of 2nd IF Amp V-4 (pin 1, 6BA6)	10.7 mc ±100 kc dev	Fully opened	9 (ratio det pri)	Adjust for maximum amplitude of pattern.*
2.	1000 mmf	Grid of 2nd IF Amp V-4 (pin 1, 6BA6)	10.7 mc ±100 kc dev	Fully opened	10 (ratio det sec)	Adjust for symmetrical curve, as shown in Figure 6.
3.	-	-	-	-	-	Repeat steps 1 & 2 for maximum amplitude and best symmetry.
4.	1000 mmf	Grid of 1st IF Amp V-3 (pin 1, 6BA6)	10.7 mc ±100 kc dev	Fully opened	11 & 12 (2nd IF sec & pri)	Adjust for maximum amplitude of pattern.*
5.	1000 mmf	Grid of conv V-2 (pin 7, 6BA7)	10.7 mc ±100 kc dev	Fully opened	13 & 14 (1st IF sec & pri)	Adjust for maximum amplitude of pattern.*
6.	1000 mmf	Grid of conv V-2 (pin 7, 6BA7)	10.7 mc ±100 kc dev	Fully opened	11, 12, 13 & 14	Readjust for maximum amplitude and best symmetry.
RF ALIGNMENT						
7.	270 ohms	FM terminal 18 on rear of chassis (open link)	105 mc ±22-1/2 kc dev	105 mc on dial	15 (osc core)	Adjust for maximum amplitude of pattern.*
8.	-	-	-	Fully closed	16 (RF core)	Turn counterclockwise until core is at bottom of pipe, then turn four turns clockwise.
9.	270 ohms	FM terminal 18 on rear of chassis	90 mc ±22-1/2 kc dev	Tune in signal	17 (RF tuning plug)	Adjust for maximum amplitude of pattern.*
10.	270 ohms	FM terminal 18 on rear of chassis	105 mc ±22-1/2 kc dev	Tune in signal	16 (RF core)	Adjust for maximum amplitude of pattern.*
11.	-	-	-	-	-	Repeat steps 9 & 10, until no further adjustment is necessary.

* An output meter across the speaker voice coil will also indicate maximum amplitude. It should not be used in place of the scope, however, since it will not show symmetry of the curve.

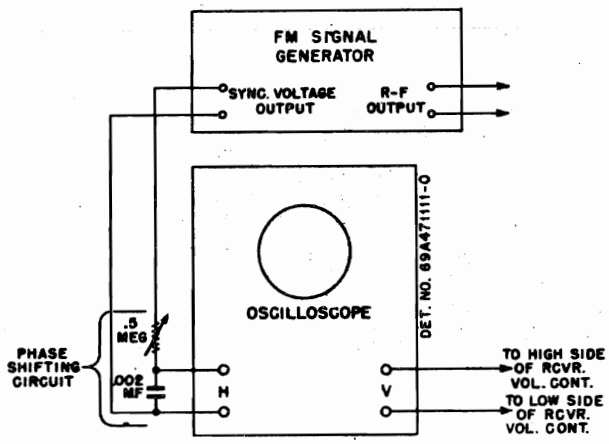

FIGURE 5.
FM SIGNAL GENERATOR & OSCILLOSCOPE HOOK-UP

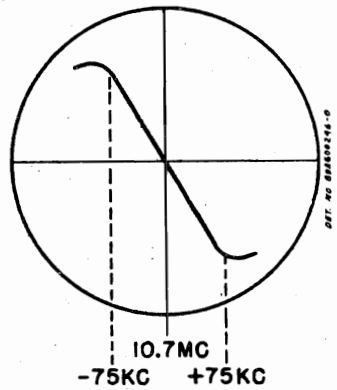

FIGURE 6. RATIO DETECTOR WAVEFORM

©John F. Rider

Compliments of www.nucow.com

CHASSIS HS-253

FM BAND - IF & RF ALIGNMENT (ALTERNATE METHOD)

1. The following procedure for FM alignment, with an unmodulated carrier generator and a DC electronic voltmeter, is not as desirable as the preceding method; but it may be used if no FM generator is available.

2. Connect the signal generator as in chart below, with no modulation.

3. Set the bandswitch to the FM position.

4. Except in step 2 below, connect the electronic voltmeter across resistor R-19 (33K) in the ratio detector stage.

5. Throughout alignment reduce the signal generator output to a value which produces no more than a 5 volt rise above no signal voltage, to avoid overloading the receiver.

6. In step 2 below, connect two 100K ohm resistors in series across R-19. Connect the electronic voltmeter between the volume control side of resistor R-18 (47K) and the junction of the two 100K resistors, with the low side of the meter at the 100K resistors.

7. Proceed as shown in the following chart.

STEP	DUMMY ANTENNA	GENERATOR CONNECTION	GENERATOR FREQUENCY	TUNER SETTING	ADJUST	REMARKS
IF ALIGNMENT						
1.	1000 mmf	Grid of conv. V-2 (pin 7, 6BA7)	10.7 mc	Fully opened	9, 11, 12, 13 & 14 (IF cores)	Adjust for maximum.
2.	1000 mmf	Grid of conv V-2 (pin 7, 6BA7)	10.7 mc	Fully opened	10 (ratio det sec)	Adjust for zero (connect meter as in step 6 above)
RF ALIGNMENT						
3.	270 ohms	FM terminal 18 on rear of chassis (open link)	105 mc	105 mc on dial	15 (osc core)	Adjust for maximum.
4.	-	-	-	Fully closed	16 (RF core)	Turn counterclockwise until core is at bottom of pipe, then turn four turns clockwise.
5.	270 ohms	FM terminal 18 on rear of chassis	90 mc	Tune in signal	17 (RF tuning plug)	Adjust for maximum.
6.	270 ohms	FM terminal 18 on rear of chassis.	105 mc	Tune in signal	16 (RF core)	Adjust for maximum.
7.	-	-		-	-	Repeat steps 5 & 6 until no further adjustment is necessary.

REPLACEMENT PARTS LIST

NOTE: When ordering parts, specify model number of set in addition to part number and description of part.

Ref. No.	Part No.	Description
CHASSIS PARTS - ELECTRICAL		
Capacitors		
C-1	19B691877	Variable, 2-gang .....
C-2	21B77286	Ceramic: 100 mmf 500V .....
C-3	21K478410	Ceramic: 1000 mmf 500V .....
C-4	21K481377	Ceramic: 500 mmf 500V .....
C-5	21K482726	Ceramic, disc type: 10,000 mmf 450V
C-6	21K77373	Ceramic: 47 mmf 500V .....
C-7	21B77286	Ceramic: 100 mmf 500V .....
C-8	8R9816	Paper: .05 mf 400V .....
C-9	21K77373	Ceramic: 47 mmf 500V .....
C-10	21A690688	Ceramic: 85 mmf 500V .....
C-11	21K482726	Ceramic, disc type: 10,000 mmf 450V
C-12	23B690975	Electrolytic: 40 mf/300V, 40-40 mf/250V, 40 mf/25V .....
C-13	21A470789	Ceramic, disc type: 5000 mmf 450V.
C-14	21K482726	Ceramic, disc type: 10,000 mmf 450V
C-15	21A470789	Ceramic, disc type: 5000 mmf 450V.
C-16	8R9809	Paper: .01 mf 400V .....
C-17	21K482726	Ceramic, disc type: 10,000 450V...
C-18	21K790912	Ceramic: 2000 mmf 500V .....
C-19	21K482726	Ceramic, disc type: 10,000 mmf 450V
C-20	21K478410	Ceramic: 1000 mmf 500V .....
C-21	21B484337	Ceramic: dual; 250-250 mmf/450V....
C-22	23K690543	Electrolytic: 3 mf 50V .....
C-23	21K478410	Ceramic: 1000 mmf 500V .....
C-24	8R9809	Paper: .01 mf 400V .....
C-25	8R490232	Tubular, molded: .047 mf 400V .....
C-26	8R9813	Paper: .005 mf 600V .....
C-27	8R9809	Paper: .01 mf 400V .....
C-28	21B77286	Ceramic: 100 mmf 500V .....
C-29	8R9813	Paper: .005 mf 600V .....
C-30	8R9813	Paper: .005 mmf 600V .....
C-31	8R9847	Paper: .002 mmf 600V .....
C-32	21K482726	Ceramic, disc type: 10,000 mmf 450V
Pilot Light		
I-1,2	65X11854	Bulb, pilot light: #47; 6-8V; .15 amp; clear; bayonet base .....

©John F. Rider

Compliments of www.nucow.com

Coils

L-1	24C690896	AM loop antenna .....
L-2	24A692148	RF choke .....
L-3	24A90064	RF choke .....
L-4	24C690584	Inductor and Capacitor Assembly: FM RF; less tuning core .....
L-5	24K600519	Inductor and Capacitor Assembly: FM osc; less tuning core .....
L-6	24A791081	RF choke .....

Resistors

Note: All resistors are insulated carbon type unless otherwise specified.

R-1	6R6004	1 meg 20% 1/2W .....
R-2	6R5551	120 10% 1/2W .....
R-3	6R5725	8200 10% 2W .....
R-4	6R2089	1800 10% 1/2W .....
R-5	6R6028	22,000 20% 1/2W .....
R-6	6R6410	33,000 10% 1/2W .....
R-7	6R6056	47,000 20% 1/2W .....
R-8	6R2108	47 20% 1/2W .....
R-9	6R5725	8200 10% 2W .....
R-10	17A690973	Wire wound: 360 10% 3W; center-tapped .....
R-11	6R2039	68 10% 1/2W .....
R-12	6R5725	8200 10% 2W .....
R-13	6R5551	120 10% 1/2W .....
R-14	6R6056	47,000 20% 1/2W .....
R-15	6R3927	2.2 meg 20% 1/2W .....
R-16	6R6377	470,000 10% 1/2W .....
Ref. No.	Part No.	Description
R-17	6R5732	15,000 10% 2W .....
R-18	6R6056	47,000 20% 1/2W .....
R-19	6R6410	33,000 10% 1/2W .....
R-20	18A600974	Volume control: 2 meg; tapped at 600,000 ohms; includes on-off sw
R-21	6R2109	10 meg 20% 1/2W .....
R-22	6R6074	68,000 10% 1/2W .....
R-23	6R6032	470,000 20% 1/2W .....
R-24	18B600683	Tone control: 1 meg; with phono-radio switch .....
R-25	6R5593	470 10% 1W .....
R-26	6R6015	220,000 20% 1/2W .....

Switches

S-1	40B690538	Bandswitch, AM-FM .....
S-2	-	Phono-radio switch (on tone control)

Transformers

T-1	24A690544	FM Antenna Input Transformer .....
T-2	24K691878	AM Oscillator Transformer: white & red dot .....
T-3	25B600684	Power Transformer .....
T-4	24B690540	1st FM IF Transformer (orange dot): 10.7 mc; complete with capacitors and cores; less shield .....
T-5	24B485553	AM IF Transformer (green dot): 455 kc; complete with capacitors, cores, and shield .....
T-6	24B690541	2nd FM IF Transformer (yellow dot): 10.7 mc; complete with capacitors and cores, less shield .....
T-7	24K485555	AM Diode Transformer (pink dot): 455 Kc: complete with capacitors, cores, and shield .....
T-8	24K600893	Ratio Detector Transformer: 10.7 mc; complete with capacitors, cores and shield .....
T-9	25B600969	Audio Output Transformer .....

CHASSIS PARTS - MECHANICAL

Part Number	Description
1X690717	Bracket Assembly, tuning core mtg: includes shoulder rivet and anti-backlash clip .....
7A600672	Bracket, chassis mtg (on rear of chassis)
7C690567	Bracket, tuner mtg (gang mtg) .....
7A600476	Bracket, tuning shaft .....
43A890397	Bushing, line cord strain relief (use with 43K890398) .....
43K890398	Bushing, line cord retainer (use with 43A890397) .....
42K690561	Clip, anti-backlash: single (on core mtg bracket) .....
42A690560	Clip, anti-backlash: double (on tuner mtg bracket) .....
42A485548	Clip, coil can mtg (AM IF transformer)
42B482867	Clip, spring: blued finish (holds FM IF transformer) .....
11M8944	Cord, dial (pointer drive) .....
11M488137	Cord, dial (core drive) .....
30K21859	Cord, line: with plug; 9 ft long .....
46B692164	Core, iron and screw: green dot (FM osc tuning core) .....
46K692165	Core, iron and screw (FM RF tuning core).
1X600490	Dial Plate and Pulleys Assembly: complete, less dial scale .....
34C600811	Dial scale: glass .....
5S7866	Eyelet: .125 x .091 brass; nkl pl (core drive cord retainer) .....
1X600495	Lead and Plug Assembly, phono-pick-up...
4S9751	Lockwasher, int-ext: #8; cad pl (pointer drive pulley mtg) .....
2S7019	Nut, hex: 4-40 x 1/4; cad pl (FM tuning core mtg) .....
2S7051	Nut, hex palnut: 3/8-32 x 9/16; cad pl (control mtg) .....
35K691846	Pad, rubber: 1-hole (gang mtg).....
35A691845	Pad, rubber: 2-hole (gang mtg) .....
28K71775	Plug, phono pick-up .....
52B481704	Pointer, dial .....
49A23960	Pulley, cord: 1/4" groove (on dial plate assembly) .....
49A21552	Pulley, cord: 1/2" groove (on dial plate assembly) .....
49A690562	Pulley, core drive: brass .....
1A691015	Pulley, pointer drive: 3-1/2" diameter
9A600040	Receptacle, phono motor: 3-prong; includes shell .....
9A791031	Receptacle, TV power: 2-prong; includes shell .....
5S8497	Rivet: .088 x 1/8 stl; nkl pl (anti-backlash clip mtg) .....
5S7771	Rivet: .088 x 3/16 stl; nkl pl (min socket mtg) .....
5S7774	Rivet: .088 x 1/4 stl; nkl pl (noval socket mtg) .....
5S7707	Rivet: .122 x 5/32 stl; nkl pl (term strip mtg) .....
5S7701	Rivet: .122 x 3/16 stl; nkl pl (ant term strip & output transformer mtg)....
5S7700	Rivet: .122 x 1/4 stl; nkl pl (octal socket mtg) .....
5A27675	Rivet, shoulder (cord pulley mtg)...
5K13896	Rivet, shoulder (on core mtg brkt)..
3S7163	Screw, machine: 8-32 x 1/4 plain hex head; cad pl (pointer drive pulley mtg)..
3S7205	Screw, machine: 8-32 x 1/4 slotted locking hex head; cad pl (gang mtg) .....
3S2695	Screw, sheet metal: #6 x 3/16 PKZ plain hex head; cad pl (tuner brkt mtg)..
3S7454	Screw, sheet metal: #8 x 1/4 PKZ plain hex head; cad pl (power trans & dial plate mtg) .....
3S7103	Setscrew: 8-32 x 1/8 Allen head; cad pl (core drive pulley mtg) .....
1X600489	Shaft, tuning: complete with pulley.....
15A690616	Shell, receptacle (on phono motor receptacle) .....
15K74443	Shell, receptacle (on TV power receptacle)
26K485936	Shield, coil (for FM IF transformers)....
26A470013	Shield, pilot light .....
9K600685	Socket, pilot light .....
9K484167	Socket, tube: miniature; 7-prong .....
9A485495	Socket, tube: noval; 9-prong .....
9A76209	Socket, tube: octal .....

©John F. Rider

Compliments of www.nucow.com

CHASSIS HS-253

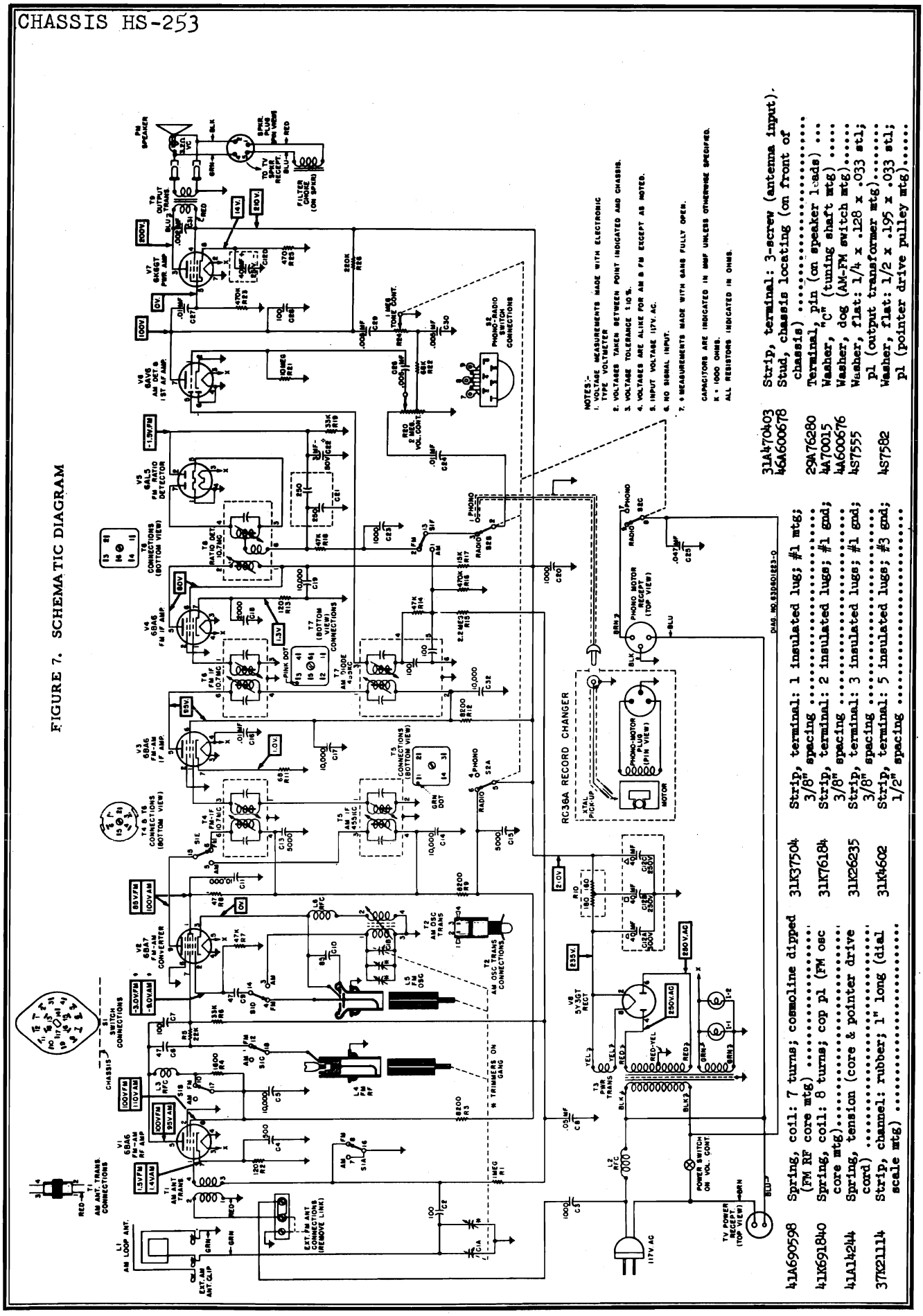

FIGURE 7. SCHEMATIC DIAGRAM

31A470403	Strip, terminal: 3-screw (antenna input).	
46A600678	Stud, chassis locating (on front of chassis)	
29A76280	Terminal, pin (on speaker leads) ...	
4A70015	Washer, "C" (tuning shaft mtg)	
44A600676	Washer, dog (AM-FM switch mtg).....	
4S7555	Washer, flat: 1/4 x .128 x .033 stl; pl (output transformer mtg).....	
4S7582	Washer, flat: 1/2 x .195 x .033 stl; pl (pointer drive pulley mtg).....	
31K37504	Strip, terminal: 1 insulated lug; #1 mtg; 3/8" spacing	
31K76184	Strip, terminal: 2 insulated lugs; #1 gnd; 3/8" spacing	
31K26235	Strip, terminal: 3 insulated lugs; #1 gnd; 3/8" spacing	
31K4602	Strip, terminal: 5 insulated lugs; #3 gnd; 1/2" spacing	
41A690598	Spring, coil: 7 turns; cosmoline dipped (FM RF core mtg)	
41K691840	Spring, coil: 8 turns; cop pl (FM osc core mtg).....	
41A14244	Spring, tension (core & pointer drive cord)	
37K21114	Strip, channel: rubber; 1" long (dial scale mtg)	

©John F. Rider

Compliments of www.nucow.com

USED WITH TV MODELS

17F5 Series

SPEAKER - PM type; common to both radio and television chassis

RADIO CHASSIS - Radio chassis HS-261 contains 8 tubes and receives both AM and FM broadcast programs. Except for common speakers, it operates entirely independently of the television receiver.

RADIO TUNING RANGE - AM - 535 to 1620 Kc
FM - 88 to 108 Mc

RADIO IF FREQUENCIES - AM IF - 455 Kc
FM IF - 10.7 Mc

RADIO ANTENNAS - AM: Loop antenna mounted in cabinet.
FM: Built into the power cord, with terminals for connection of an external antenna, if required.

POWER SUPPLY - 117 volts, 60 cycle alternating current only.

RADIO POWER CONSUMPTION - 85 watts, including phono motor

RADIO AUDIO OUTPUT - 3 watts

RADIO CHASSIS TUBE COMPLEMENT -

6BA6	FM-AM RF Amplifier
6BA7	FM-AM Converter
6BA6	FM-AM IF Amplifier
6BA6	FM IF Amplifier
6AL5	FM Ratio Detector
6AV6	AM Detector & 1st Audio Amp
6K6GT	Power Amplifier
5Y3GT	Rectifier

INSTALLATION & OPERATING INSTRUCTIONS

ANTENNAS

No outside antenna or ground is normally required for standard broadcast (AM) reception, as a loop antenna is located inside the cabinet. Antenna connections are shown in Figure 1. In locations where additional pick-up is desired, an external antenna may be connected to the clip marked "EXT BC ANT" on the loop antenna.

An FM antenna, built into the power cord, eliminates the need for an external FM antenna when the receiver is used in normal FM service areas, such as are found in and for a few miles around metropolitan areas. In "fringe" or weak signal areas, improved FM reception can be obtained by using an outside FM antenna. The external antenna should be connected through a 300 ohm twin transmission line to the 1st & 2nd screws on the terminal strip on the chassis, as in Figure 1. The link between the 2nd & 3rd screws should be opened. Orient the antenna to obtain maximum volume of the FM stations.

For best FM reception from the built-in power line cord antenna, it is important to stretch the cord to its full length. Changing the direction or position of the line cord, or reversing the plug in the wall outlet, will often improve reception from weak stations. Connect the link between the 2nd & 3rd screws on the terminal strip on the chassis when the built-in antenna is used.

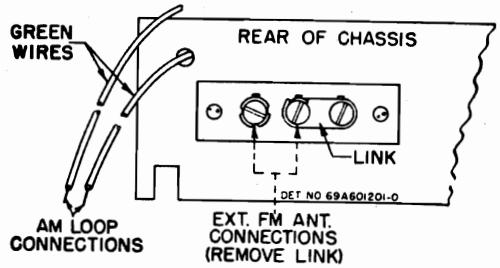

FIGURE 1. ANTENNA CONNECTIONS

CONTROLS

Refer to Figure 2 for the locations of the radio operating controls.

Power for both the radio and the record changer is controlled by the VOL-ON-OFF knob. The phonograph motor will not operate, however, until the PHONO-TONE-RADIO knob is rotated also to "PHONO". CAUTION: The power switches on the AM-FM radio and on the television receiver are independent. Make sure both are turned off when the set is not in use.

Tuning of FM stations should be done very carefully, for best sound reproduction, not necessarily for the strongest volume received.

FIGURE 2. OPERATING CONTROLS

ALIGNMENT

GENERAL INFORMATION

1. Maximum performance can be obtained only if extreme care is exercised during alignment.
2. Use a small fibre screwdriver for aligning the IF transformers.
3. Refer to Figure 4 for the location of all alignment trimmers and cores.
4. As the stages are brought into alignment, reduce the signal generator output to a low value to avoid overloading the receiver.

©John F. Rider

Compliments of www.nucow.com

CHASSIS HS-261

ORDER OF ALIGNMENT AND EQUIPMENT REQUIRED

1. AM Broadcast Band IF & RF Alignment
   a. 455 to 1620 Kc AM Signal Generator
   b. Low range output meter

2(A) FM Band IF & RF Alignment (preferred method)
   a. 10.7 to 108 Mc FM signal generator
   b. Oscilloscope

(B) FM Band IF & RF Alignment (alternate method)
   a. 10.7 to 108 Mc signal generator (unmodulated)
   b. Low range DC electronic voltmeter

AM BROADCAST BAND - IF & RF ALIGNMENT

1. With the gang fully closed, adjust the pointer to coincide with the left of the "55" marking on the dial scale. See Figure 3.
2. Connect the AM signal generator as in chart below, with 400 cycle, 30% modulation.
3. Connect the output meter across the speaker voice coil. Throughout alignment reduce the generator output to a level which produces less than 1.27 volts (.5 watt) across the voice coil, to avoid overloading the receiver.
4. Set the bandswitch to the AM position.
5. Turn the receiver volume control to maximum.
6. Proceed as shown in the following chart.

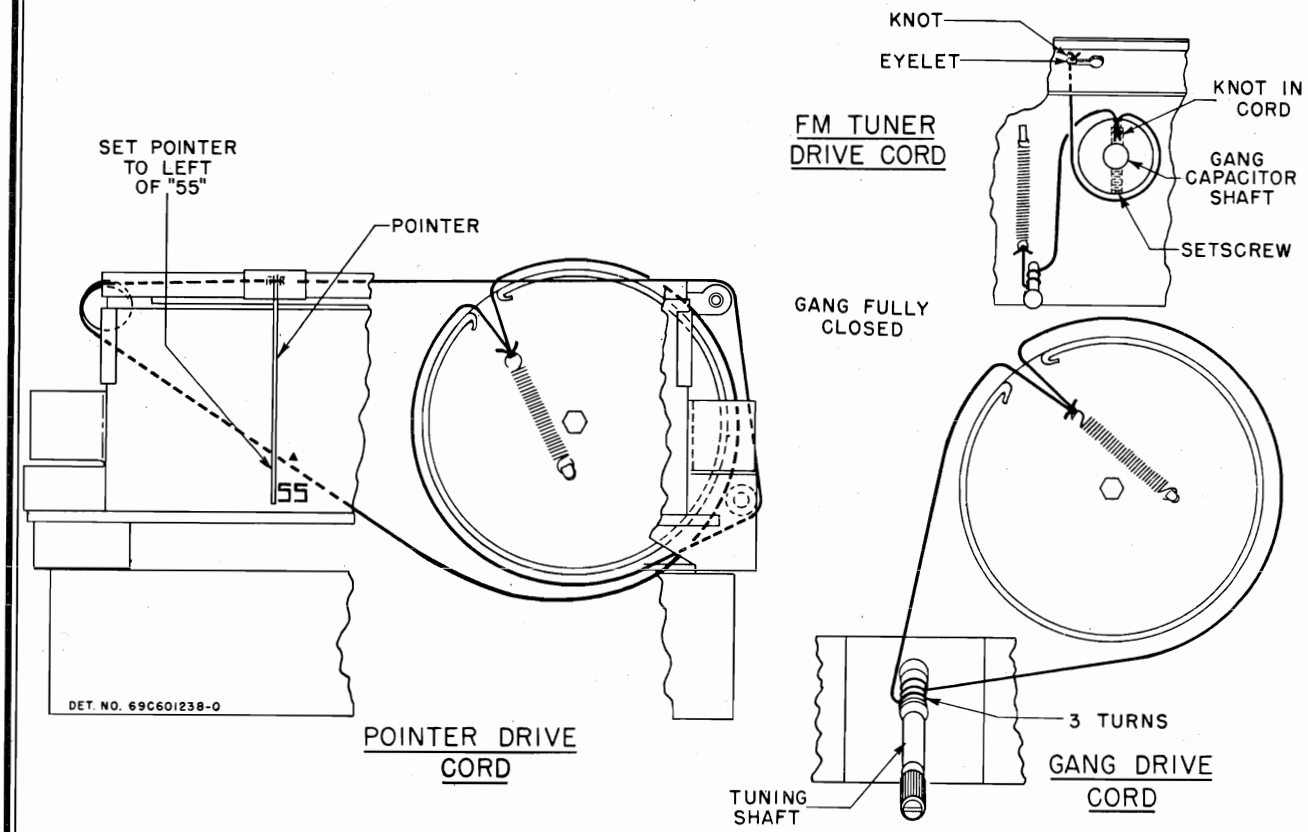

FIGURE 3. DIAL RESTRINGING DETAIL

STEP	DUMMY ANTENNA	GENERATOR CONNECTION	GENERATOR FREQUENCY	GANG SETTING	ADJUST	REMARKS
IF ALIGNMENT						
1.	.1 mf	Grid of conv V-2 (pin 7, 6BA7)	455 Kc	Fully opened	1, 2, 3, & 4 (IF cores)	Adjust for maximum.
RF ALIGNMENT						
2.	.1 mf	Grid of conv V-2 (pin 7, 6BA7)	1620 Kc	Fully opened	5 (AM osc)	Adjust for maximum. *
3.	-	-	-	-	-	Connect AM loop to chassis.
4.	-	Across radiation loop**	1400 Kc	Tune in signal	8 (AM ant)	Adjust for maximum.

©John F. Rider

Compliments of www.nucow.com

5. If, after the receiver has been aligned as above, it is found to be badly off calibration, it will be necessary to adjust oscillator core (7) as follows: connect the generator to the grid of the converter tube and, with the gang fully closed, adjust core (7) at 535 kc. It is advisable to repeat the oscillator adjustments at 1620 Kc and 535 Kc several times until the tuning range is correct. Core (7) has been pre-set at the factory and normally should require no retuning.

* If difficulty is encountered in tuning trimmer (5), adjust trimmer (6) to 1/2 turn from tight.

**Connect generator output across 5" diameter, 5 turn loop and couple inductively to receiver loop. Keep loops at least 12" apart.

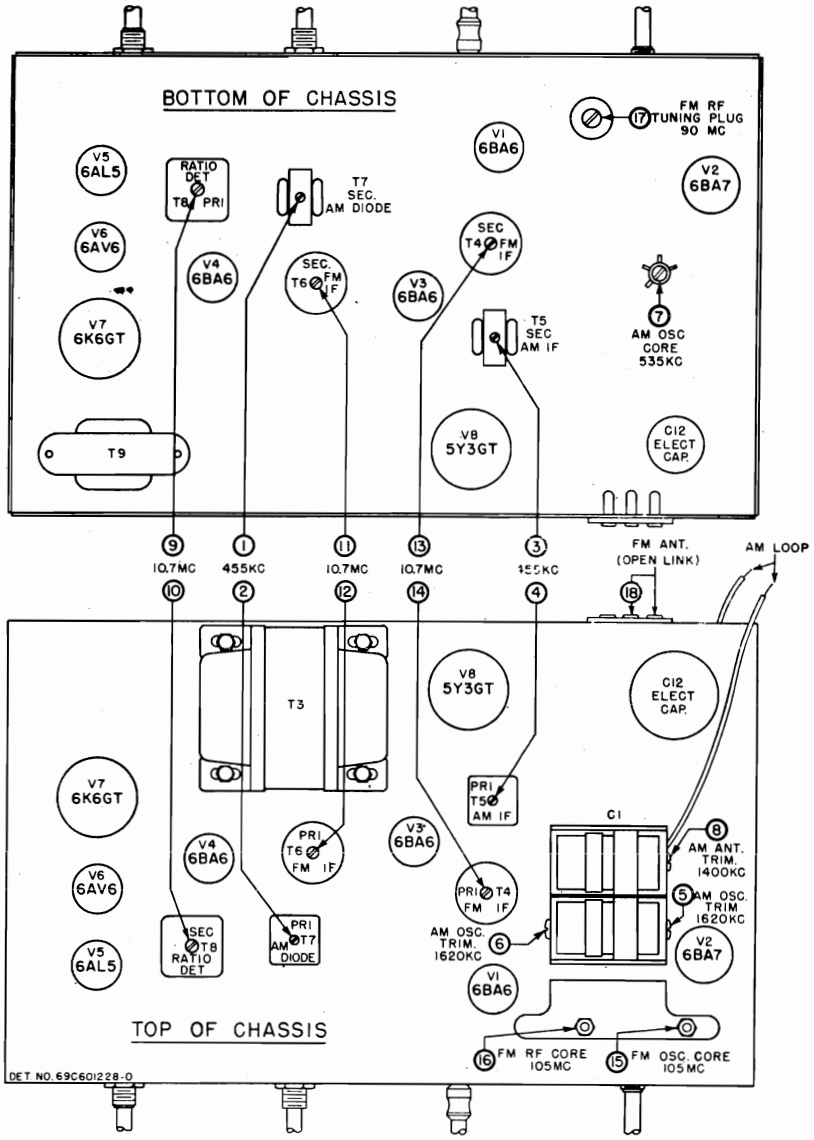

FIGURE 4.
TUBE & TRIMMER LOCATIONS

FM BAND - IF & RF ALIGNMENT (PREFERRED METHOD)

1. The following FM alignment procedure, using an FM signal generator and an oscilloscope, is to be preferred because the actual response pattern may be observed on the scope and adjusted for best symmetry and maximum amplitude.

2. Connect the vertical input terminals of the oscilloscope between the chassis and the junction of resistor R-18 (47K) and capacitor C-23 (1000 mmf).

3. Connect the FM signal generator sync voltage output terminals, through a phase shifting network, to the horizontal input terminals of the scope, as in Figure 5. (Other values of resistance and capacitance may be required, depending upon the scope). The phasing control should be adjusted to give only one trace on the scope. NOTE: If the FM generator has a built-in phase control, the phase shifting network is not necessary.

4. Set the bandswitch to the FM position.

5. Throughout alignment, reduce the generator output to keep the signal just above the noise level, to avoid overloading the receiver.

6. Proceed as shown in the following chart.

©John F. Rider

Compliments of www.nucow.com

CHASSIS HS-261

STEP	DUMMY ANTENNA	GENERATOR CONNECTION	GENERATOR FREQUENCY	TUNER SETTING	ADJUST	REMARKS
IF ALIGNMENT						
1.	1000 mmf	Grid of 2nd IF Amp V-4 (pin 1, 6BA6)	10.7 mc ±100 kc dev	Fully opened	9 (ratio det pri)	Adjust for maximum amplitude of pattern. *
2.	1000 mmf	Grid of 2nd IF Amp V-4 (pin 1, 6BA6)	10.7 mc ±100 kc dev	Fully opened	10 (ratio det sec)	Adjust for symmetrical curve, as shown in Figure 6.
3.	-	-	-	-	-	Repeat steps 1 & 2 for maximum amplitude and best symmetry.
4.	1000 mmf	Grid of 1st IF Amp V-3 (pin 1, 6BA6)	10.7 mc ±100 kc dev	Fully opened	11 & 12 (2nd IF sec & pri)	Adjust for maximum amplitude of pattern. *
5.	1000 mmf	Grid of conv V-2 (pin 7, 6BA7)	10.7 mc ±100 kc dev	Fully opened	13 & 14 (1st IF sec & pri)	Adjust for maximum amplitude of pattern. *
6.	1000 mmf	Grid of conv V-2 (pin 7, 6BA7)	10.7 mc ±100 kc dev	Fully opened	11, 12, 13 & 14	Readjust for maximum amplitude and best symmetry.
RF ALIGNMENT						
7.	270 ohms	FM terminal 18 on rear of chassis (open link)	105 mc ±22-1/2 kc dev	105 mc on dial	15 (osc core)	Adjust for maximum amplitude of pattern. *
8.	-	-	-	Fully closed	16 (RF core)	Turn counterclockwise until core is at bottom of pipe, then turn four turns clockwise.
9.	270 ohms	FM terminal 18 on rear of chassis	90 mc ±22-1/2 kc dev	Tune in signal	17 (RF tuning plug)	Adjust for maximum amplitude of pattern. *
10.	270 ohms	FM terminal 18 on rear of chassis	105 mc ±22-1/2 kc dev	Tune in signal	16 (RF core)	Adjust for maximum amplitude of pattern. *
11.	-	-	-	-	-	Repeat steps 9 & 10, until no further adjustment is necessary.

* An output meter across the speaker voice coil will also indicate maximum amplitude. It should not be used in place of the scope, however, since it will not show symmetry of the curve.

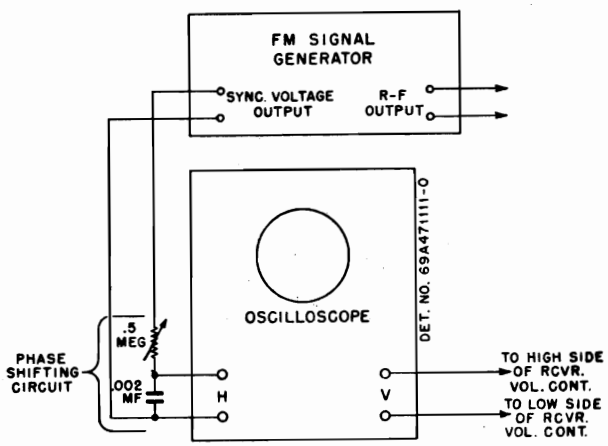

FIGURE 5.
FM SIGNAL GENERATOR AND OSCILLOSCOPE HOOK-UP

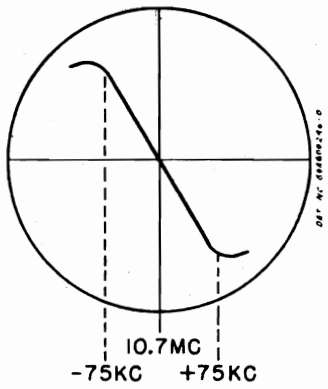

FIGURE 6. RATIO DETECTOR WAVEFORM

©John F. Rider

Compliments of www.nucow.com

FM BAND - IF & RF ALIGNMENT (ALTERNATE METHOD)

1. The following procedure for FM alignment, with an unmodulated carrier generator and a DC electronic voltmeter, is not as desirable as the preceding method; but it may be used if no FM generator is available.

2. Connect the signal generator as in chart below, with no modulation.

3. Set the bandswitch to the FM position.

4. Except in step 2 below, connect the electronic voltmeter across resistor R-19 (33K) in the ratio detector stage.

5. Throughout alignment reduce the signal generator output to a value which produces no more than a 5 volt rise above no signal voltage, to avoid overloading the receiver.

6. In step 2 below, connect two 100K ohm resistors in series across R-19. Connect the electronic voltmeter between the volume control side of resistor R-19 (47K) and the junction of the two 100K resistors, with the low side of the meter at the 100K resistors.

7. Proceed as shown in the following chart.

STEP	DUMMY ANTENNA	GENERATOR CONNECTION	GENERATOR FREQUENCY	TUNER SETTING	ADJUST	REMARKS
IF ALIGNMENT						
1.	1000 mmf	Grid of conv V-2 (pin 7, 6BA7)	10.7 mc	Fully opened	9, 11, 12, 13 & 14 (IF cores)	Adjust for maximum.
2.	1000 mmf	Grid of conv V-2 (pin 7, 6BA7)	10.7 mc	Fully opened	10 (ratio det sec)	Adjust for zero (connect meter as in step 6 above)
RF ALIGNMENT						
3.	270 ohms	FM terminal 18 on rear of chassis (open link)	105 mc	105 mc on dial	15 (osc core)	Adjust for maximum
4.	-	-	-	Fully closed	16 (RF core)	Turn counterclockwise until core is at bottom of pipe, then turn four turns clockwise.
5.	270 ohms	FM terminal 18 on rear of chassis	90 mc	Tune in signal	17 (RF tuning plug)	Adjust for maximum.
6.	270 ohms	FM terminal 18 on rear of chassis	105 mc	Tune in signal	16 (RF core)	Adjust for maximum.
7.	-	-	-	-	-	Repeat steps 5 & 6 until no further adjustment is necessary.

REPLACEMENT PARTS LIST

NOTE: When ordering parts, specify model number of set in addition to part number and description of part.

CHASSIS PARTS - ELECTRICAL

Capacitors

Ref. No.	Part No.	Description
C-1	19B691877	Variable, 2-gang .....
C-2	21B77286	Ceramic: 100 mmf 500V .....
C-3	21K478410	Ceramic: 1000 mmf 500V .....
C-4	21K481377	Ceramic: 500 mmf 500V .....
C-5	21K482726	Ceramic, disc type: 10,000 mmf 450V
C-6	21K77373	Ceramic: 47 mmf 500V .....
C-7	21B77286	Ceramic: 100 mmf 500V.....
C-8	8R9816	Paper: .05 mf 400V .....
C-9	21K77373	Ceramic: 47 mmf 500V .....
C-10	21A690688	Ceramic: 85 mmf 500V .....
C-11	21K482726	Ceramic, disc type: 10,000 mmf 450V
C-12	23B690975	Electrolytic: 40 mf/300V, 40-40 mf/ 250V, 40 mf/25V .....
C-13	21A470789	Ceramic, disc type: 5000 mmf 450V.
C-14	21K482726	Ceramic, disc type: 10,000 mmf 450V
C-15	21A470789	Ceramic, disc type: 5000 mmf 450V.
C-16	8R9809	Paper: .01 mf 400V .....
C-17	21K482726	Ceramic, disc type: 10,000 mmf 450V
C-18	21K790912	Ceramic; 2000 mmf 500V .....
C-19	21K482726	Ceramic, disc type: 10,000 mmf 450V
C-20	21K478410	Ceramic: 1000 mmf 500V .....
C-21	21B484337	Ceramic: dual; 250-250 mmf/450V....
C-22	23K690543	Electrolytic: 3 mf 50V .....
C-23	21K478410	Ceramic: 1000 mmf 500V .....
C-24	8R9809	Paper: .01 mf 400V .....
C-25	8R490232	Tubular, molded: .047 mf 400V.....
C-26	8R9813	Paper: .005 mf 600V .....
C-27	8R9809	Paper: .01 mf 400V .....
C-28	21B77286	Ceramic: 100 mmf 500V .....
C-29	8R9813	Paper: .005 mf 600V .....
C-30	8R9813	Paper: .005 mmf 600V .....
C-31	8R9847	Paper: .002 mmf 600V .....
C-32	21K482726	Ceramic, disc type: 10,000 mmf 450V

Pilot Light

I-1,2	65X11854	Bulb, pilot light: #47; 6-8V; .15 amp; clear; bayonet base .....

©John F. Rider

Compliments of www.nucow.com

CHASSIS HS-261

Ref. No.	Part No.	Description
Coils		
L-1	24C690896	AM loop antenna .....
L-2	24A692148	RF choke .....
L-3	24A90064	RF choke .....
L-4	24C690584	Inductor and Capacitor Assembly: FM RF; less tuning core .....
L-5	24K600519	Inductor and Capacitor Assembly: FM osc; less tuning core .....
L-6	24A791081	RF choke .....
Resistors		
		Note: All resistors are insulated carbon type unless otherwise specified.
R-1	6R6004	1 meg 20% 1/2W .....
R-2	6R5551	120 10% 1/2W.....
R-3	6R5725	8200 10% 2W .....
R-4	6R2089	1800 10% 1/2W .....
R-5	6R6028	22,000 20% 1/2W .....
R-6	6R6410	33,000 10% 1/2W .....
R-7	6R6056	47,000 20% 1/2W .....
R-8	6R2108	47 20% 1/2W .....
R-9	6R5725	8200 10% 2W .....
R-10	17A690973	Wire wound: 360 10% 3W; center-tapped .....
R-11	6R2039	68 10% 1/2W .....
R-12	6R5725	8200 10% 2W .....
R-13	6R5551	120 10% 1/2W .....
R-14	6R6056	47,000 20% 1/2W .....
R-15	6R3927	2.2 meg 20% 1/2W .....
R-16	6R6377	470,000 10% 1/2W.....
R-17	6R5732	15,000 10% 2W .....
R-18	6R6056	47,000 20% 1/2W .....
R-19	6R6410	33,000 10% 1/2W .....
R-20	18A600974	Volume control: 2 meg; tapped at 600,000 ohms; includes on-off sw.
R-21	6R2109	10 meg 20% 1/2W .....
R-22	6R6074	68,000 10% 1/2W .....
R-23	6R6032	470,000 20% 1/2W .....
R-24	18B600683	Tone control: 1 meg; with phono-radio switch .....
R-25	6R5593	470 10% 1W .....
R-26	6R6015	220,000 20% 1/2W .....
Switches		
S-1	40B690538	Bandswitch, AM-FM .....
Transformers		
T-1	24A690544	FM Antenna Input Transformer .....
T-2	24K691878	AM Oscillator Transformer: white & red dot .....
T-3	25B600684	Power Transformer .....
T-4	24B690540	1st FM IF Transformer (orange dot): 10.7 mc; complete with capacitors and cores; less shield .....
T-5	24B485553	AM IF Transformer (green dot): 455 kc; complete with capacitors, cores,and shield .....
T-6	24B690541	2nd FM IF Transformer (yellow dot): 10.7 mc; complete with capacitors and cores; less shield.....
T-7	24K485555	AM Diode Transformer (pink dot): 455 kc; complete with capacitors, cores, and shield .....
T-8	24K600893	Ratio Detector Transformer: 10.7 mc; complete with capacitors, cores and shield .....
T-9	25B600969	Audio Output Transformer .....

Part Number	Description
CHASSIS PARTS - MECHANICAL	
1X690717	Bracket Assembly, tuning core mtg: includes shoulder rivet and anti-backlash clip .....
7C690567	Bracket, tuner mtg (gang mtg) .....
7A600476	Bracket, tuning shaft .....
43A890397	Bushing, line cord strain relief (use with 43K890398) .....
43K890398	Bushing, line cord retainer (use with 43A890397) .....
42K690561	Clip, anti-backlash: single (on core mtg bracket) .....
42A690560	Clip, anti-backlash: double (on tuner mtg bracket) .....
42A485548	Clip, coil can mtg (AM IF transformer)
42B482867	Clip, spring: blued finish (holds FM IF transformer) .....
11M8944	Cord, dial (pointer drive) .....
11M488137	Cord, dial (core drive) .....
30K21859	Cord, line: with plug; 9 ft long .....
46B692164	Core, iron and screw: green dot (FM osc tuning core) .....
46K692165	Core, iron and screw (FM RF tuning core).
1X600490	Dial Plate and Pulleys Assembly: complete, less dial scale .....
34C600868	Dial scale: glass .....
5S7866	Eyelet: .125 x .091 brass; nkl pl (core drive cord retainer).....
1X601152	Lead and Plug Assembly, phono pick-up....
4S9751	Lockwasher, int-ext: #8; cad pl (pointer drive pulley mtg) .....
2S7019	Nut, hex: 4-40 x 1/4; cad pl (FM tuning core mtg) .....
2S7051	Nut, hex palnut: 3/8-32 x 9/16; cad pl (control mtg) .....
35K691846	Pad, rubber: 1-hole (gang mtg) .....
35A691845	Pad, rubber: 2-hole (gang mtg) .....
28K71775	Plug, phono pick-up .....
52B481704	Pointer, dial .....
49A23960	Pulley, cord: 1/4" groove (on dial plate assembly) .....
49A21552	Pulley, cord: 1/2" groove (on dial plate assembly) .....
49A690562	Pulleys, core drive: brass .....
1A691015	Pulley, pointer drive: 3-1/2" diameter...
9A600040	Receptacle, phono motor: 3-prong; includes shell .....
9A791031	Receptacle, TV power: 2-prong; includes shell .....
5S8497	Rivet: .088 x 1/8 stl; nkl pl (anti-backlash clip mtg) .....
5S7771	Rivet: .088 x 3/16 stl; nkl pl (min socket mtg) .....
5S7774	Rivet: .088 x 1/4 stl; nkl pl (noval socket mtg) .....
5S7707	Rivet: .122 x 5/32 stl; nkl pl (term strip mtg) .....
5S7701	Rivet: .122 x 3/16 stl; nkl pl (ant term strip & output trans mtg).....
5S7700	Rivet: .122 x 1/4 stl; nkl pl (octal socket mtg) .....
5A27675	Rivet, shoulder (cord pulley mtg)...
5K13896	Rivet, shoulder (on core mtg brkt)....
3S7163	Screw, machine:8-32 x 1/4 plain hex head; cad pl (pointer drive pulley mtg)..
3S7205	Screw, machine: 8-32 x 1/4 slotted locking hex head; cad pl (gang mtg).....
3S2695	Screw, sheet metal: #6 x 3/16 PKZ plain hex head; cad pl (tuner brkt mtg)..
3S7454	Screw, sheet metal: #8 x 1/4 PKZ plain hex head; cad pl (pwr trans & dial plate mtg) .....
3S7103	Setscrew: 8-32 x 1/8 Allen head; cad pl (core drive pulley mtg) .....
1X600489	Shaft, tuning: complete with pulley.....

©John F. Rider

Compliments of www.nucow.com

15A690616	Shell, receptacle (on phono motor receptacle) .....
15K74443	Shell, receptacle (on TV power receptacle)
26K485936	Shield, coil (for FM IF transformers)....
26A470013	Shield, pilot light .....
9K600685	Socket, pilot light .....
9K484167	Socket, tube: miniature; 7-prong .....
9A485495	Socket, tube: noval; 9-prong .....
9A76209	Socket, tube: octal .....
41A690598	Spring, coil: 7 turns; cosmoline dipped (FM RF core mtg) .....
41K691840	Spring, coil: 8 turns; cop pl (FM osc core mtg) .....
41A14244	Spring, tension (core & pointer drive cord) .....
37K21114	Strip, channel: rubber; 1" long (dial scale mtg) .....
31K37504	Strip, terminal: 1 insulated lug; #1 mtg; 3/8" spacing .....
31K76184	Strip, terminal: 2 insulated lugs; #1 gnd; 3/8" spacing .....
31K26235	Strip, terminal: 3 insulated lugs; #1 gnd; 3/8" spacing .....
31K4602	Strip, terminal: 5 insulated lugs; #3 gnd; 1/2" spacing .....
31A470403	Strip, terminal: 3-screw (antenna input)
5S5405	Terminal, pin (on speaker leads) .....
4A70015	Washer, "C" (tuning shaft mtg).....
4A600767	Washer, dog (AM-FM switch mtg).....
4S7555	Washer, flat: 1/4 x .128 x .033 stl; cad pl (output trans mtg) .....
4S7582	Washer, flat: 1/2 x .195 x .033 stl; cad pl (pointer drive pulley mtg).....

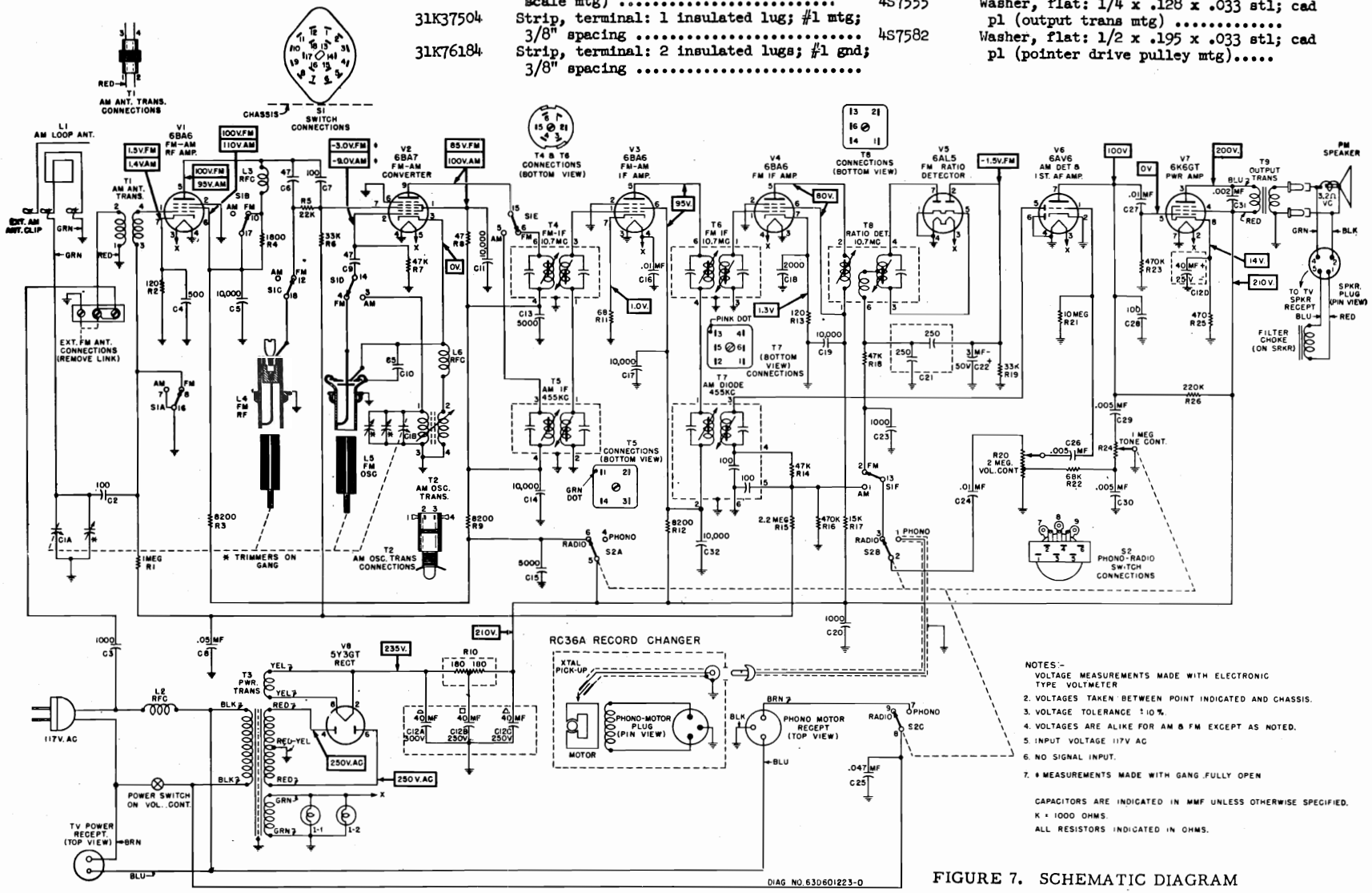

NOTES:-
1. VOLTAGE MEASUREMENTS MADE WITH ELECTRONIC TYPE VOLTMETER
2. VOLTAGES TAKEN BETWEEN POINT INDICATED AND CHASSIS.
3. VOLTAGE TOLERANCE ±10%.
4. VOLTAGES ARE ALIKE FOR AM & FM EXCEPT AS NOTED.
5. INPUT VOLTAGE 117V AC
6. NO SIGNAL INPUT.
7. * MEASUREMENTS MADE WITH GANG FULLY OPEN

CAPACITORS ARE INDICATED IN MMF UNLESS OTHERWISE SPECIFIED.
K = 1000 OHMS.
ALL RESISTORS INDICATED IN OHMS.

FIGURE 7. SCHEMATIC DIAGRAM

©John F. Rider
Compliments of www.nucow.com

MODEL SROB, Ch. OB, Studebaker

GENERAL INFORMATION

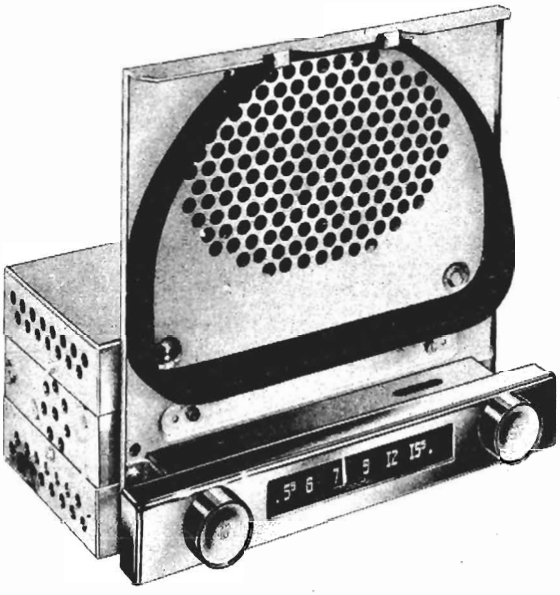

TYPE - Chassis OB is a universal, manually tuned, automotive type, superheterodyne chassis, used in Motorola Models SROB, etc. An external speaker is used.

TUNING RANGE - 540 to 1600 Kc IF - 455 Kc

TUBE COMPLEMENT - 6BA6 - RF Amplifier
6BE6 - Converter
6BA6 - IF Amplifier
6AV6 - Det-AVC & AF Amp
6AS5 - Power Amplifier
6X4 - Rectifier

POWER INPUT - 5 amps at 6.3V DC

POWER OUTPUT - 2 watts

NOTE:
This manual contains a complete list of parts for the OB chassis. Replacement parts for specific receivers in which the OB chassis is used, will be found in separate service manuals bearing the appropriate receiver model numbers.

ALIGNMENT

Remove receiver top and bottom housing covers and also the escutcheon to expose all alignment adjustments.

Connect a 6 volt storage battery to BAT terminal and chassis of receiver.

Connect a 3.2 ohm PM speaker to VC terminal and chassis of receiver.

Connect a low range output meter across speaker voice coil and set volume control at maximum. For greatest accuracy, keep output of receiver at approximately 1 watt (1 watt = 1.79 volts on output meter) throughout alignment by reducing signal generator output as stages are brought into alignment. Use a small fibre screwdriver when aligning IF and diode transformers. A special tool, Motorola Part No. 66A76278, is required for adjusting the tuner cores. IMPORTANT: Do not push in on the alignment tool when adjusting the tuner cores; the slightest inward pressure may move tuner carriage and result in inaccurate alignment.

STEP	DUMMY ANTENNA	GENERATOR CONNECTION	GENERATOR FREQUENCY	TUNER SET TO	ADJUST	REMARKS
IF ALIGNMENT						
1.	.1 mf	6BE6 grid (pin #7) & chassis	455 Kc	High frequency end (cores out)	1, 2, 3 & 4	Peak for maximum in order indicated. Check by repeating step.
RF ALIGNMENT						
2.	See Fig. 1	Antenna receptacle through dummy	1610 Kc	High frequency end; cores should project 1-1/8" from cans (Screw out if necessary)	5, 6, & 7	Peak for maximum in order indicated.
3.	"	"	1425 Kc	1425 Kc-per Fig. 1	8, 9 & 10	Peak for maximum in order indicated.

4. When receiver is installed in car, extend antenna fully, set dial to approximately 1400 Kc and repeak antenna trimmer (7) for maximum volume of a weak station or noise between stations.

©John F. Rider

Compliments of www.nucow.com

MODEL SROB, Ch. OB, Studebaker

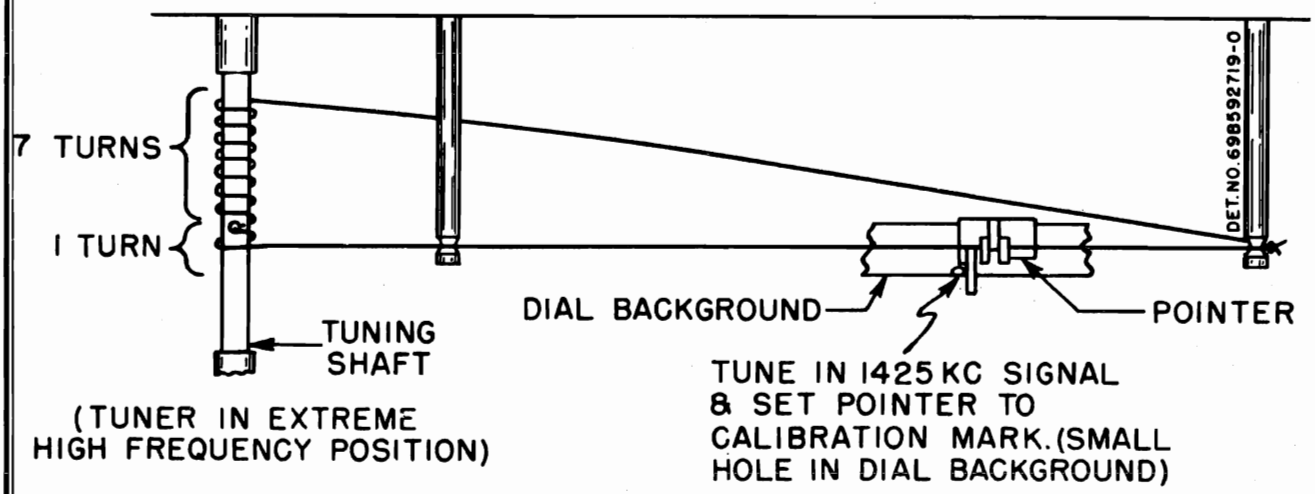

FIGURE 1. RESTRINGING DETAIL

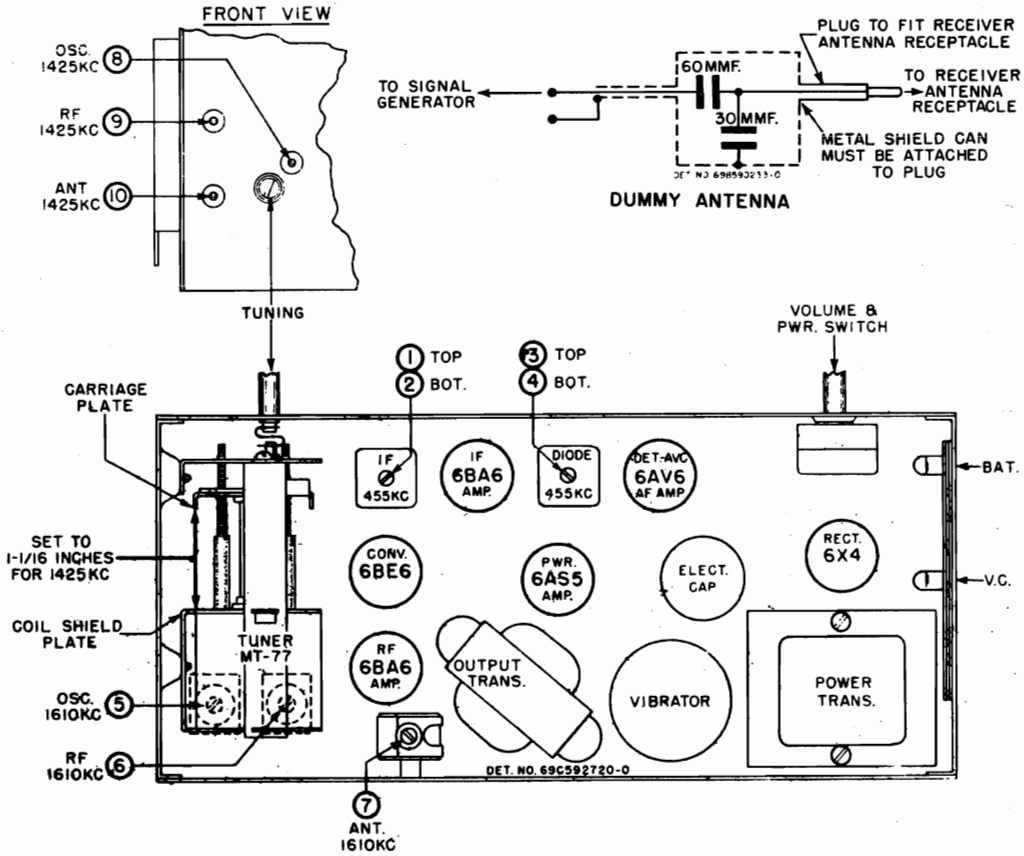

FIGURE 2. TUBE & TRIMMER LOCATIONS AND DUMMY ANTENNA

©John F. Rider

Compliments of www.nucow.com

MODEL SROB, Ch.OB,
Studebaker

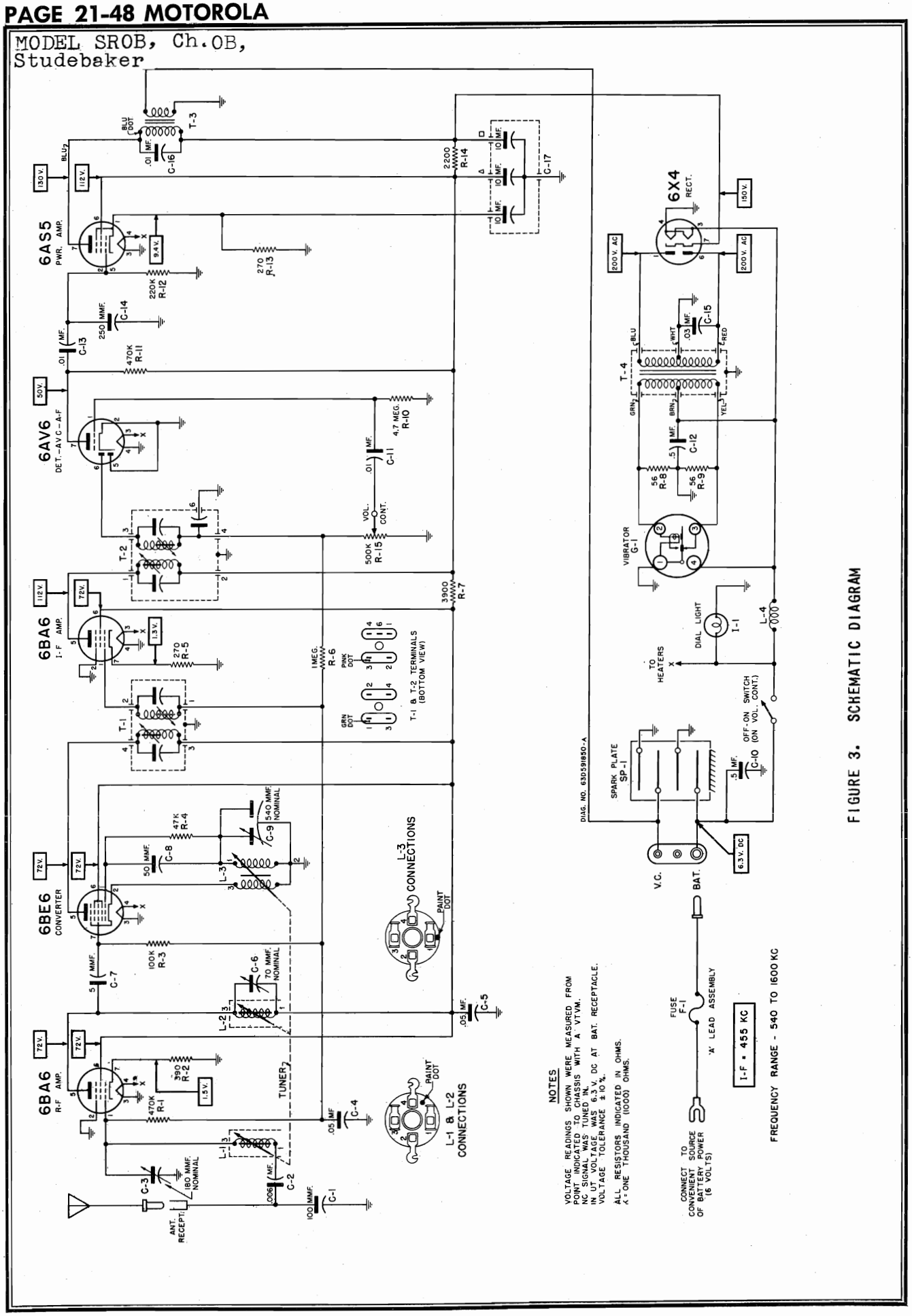

FIGURE 3. SCHEMATIC DIAGRAM

©John F. Rider

Compliments of www.nucow.com

MODEL SROB, Ch. OB, Studebaker

REPLACEMENT PARTS LIST

CHASSIS PARTS - ELECTRICAL

REF. NO.	PART NO.	DESCRIPTION
CAPACITORS		
C-1	21B77562	Ceramic: 100 mmf 500V .....
C-2	8A4529	Paper: .006 mf 100V .....
C-3	20K591969	Trimmer, variable: 180 mmf nominal
C-4	8K13514	Paper: .05 mf 100V .....
C-5	8R23146	Paper: .05 mf 200V .....
C-6	20A481526	Trimmer, variable: 70 mmf nominal
C-7	21K70720	Molded: 5 mmf 500V .....
C-8	21R6513	Mica: 50 mmf 10% 300V .....
C-9	20A591977	Trimmer, variable: 540 mmf nominal
C-10	8K17028	Paper: .5 mf 100V .....
C-11	8K472754	Paper: .01 mf 100V .....
C-12	8K17028	Paper: .5 mf 100V .....
C-13	8R23690	Paper: .01 mf 400V .....
C-14	21R6543	Mica: 250 mmf 20% 500V .....
C-15	8K592154	Paper: .03 mf 600V .....
C-16	8R23690	Paper: .01 mf 400V .....
C-17	23A591500	Electrolytic: 10-10/250V; 10-25V.
FUSE		
F-1	65A10266	Fuse: 10 amp (3AG) .....
PILOT LIGHT		
I-1	65X10867	Bulb: 6.3V; .25 amp; tubular; bayonet base; clear .....
VIBRATOR		
G-1	48B3333	Vibrator: non-sync; 4-pin .....
COILS		
L-1,2	24B71881	RF & Antenna Coil (specify color of paint dots on old coil when ordering) .....
L-3	24B592153	Oscillator Coil (specify color of paint dots on old coil when ordering) .....
L-4	24A472535	Choke, hash .....

RESISTORS

Note: All resistors are insulated carbon type unless otherwise specified.

R-1	6R6032	470,000 20% 1/2W .....
R-2	6R5554	390 10% 1/2W .....
R-3	6R6075	100,000 20% 1/2W .....
R-4	6R6056	47,000 20% 1/2W .....
R-5	6R6432	270 10% 1/2W .....
R-6	6R6004	1 meg 20% 1/2W .....
R-7	6R5618	3900 10% 1W .....
R-8	6R5614	56 10% 1/2W .....
R-9	6R5614	56 10% 1/2W .....
R-10	6R2122	4.7 meg 20% 1/2W .....
R-11	6R6032	470,000 20% 1/2W .....
R-12	6R6015	220,000 20% 1/2W .....
R-13	6R6336	270 10% 1W .....
R-14	6R6006	2200 20% 1W .....
R-15	18A591978	Volume Control: 500,000 ohms; includes SPST switch .....
SPARK PLATE		
SP-1	1B592173	Spark Plate Assembly: complete..
TRANSFORMERS		
T-1	24B485553	IF, 455 Kc: complete with tuning cores & padding capacitors but less shield .....
T-2	24B485554	Diode, 455 Kc: complete with tuning cores & padding capacitors but less shield .....
T-3	25B70171	Output Transformer .....
T-4	25B591533	Power Transformer .....

CHASSIS PARTS - MECHANICAL

PART NO.	DESCRIPTION
42A485548	Clip, coil can mtg .....
42A591959	Clip, spring (tuner drive) .....
42A4215	Clip, vibrator grounding .....
61A473514	Crystal, transparent green (for dial light) .....
1X473150	Light Shield & Plug Assembly.....
4S7666	Lockwasher, ext: #6; cad pl (power trans mtg) .....
4S7691	Lockwasher, int: 3/8"; cad pl (vol control mtg) .....
2S7002	Nut, hex: 6-32 x 5/16; cad pl (pwr trans mtg) .....
2S1376	Nut, hex: 3/8-32 x 1/2; cad pl (vol control mtg) .....
64A591992	Plate, rear cover .....
9A472148	Receptacle, antenna contact .....
5S7706	Rivet: .122 x 1/8; stl; nkl pl (dial light brkt mtg) .....
5S7707	Rivet: .122 x 5/32; stl; nkl pl (terminal strip mtg) .....
5S7771	Rivet: .088 x 3/16; stl; nkl pl (tube socket mtg) .....
5S7701	Rivet: .122 x 3/16; stl; nkl pl (vibrator socket mtg) .....
5S7700	Rivet: .122 x 1/4; stl; nkl pl (spark plate mtg) .....
3S7454	Screw, sheet metal: #8 x 1/4; PKZ; plain hex head (tuner mtg, rear cover mtg) .....
3S8140	Screw, sheet metal: #8 x 3/16; PKZ; plain hex head (tuner mtg) .....
9A591971	Socket, pilot light & brkt .....
9A70208	Socket, tube: 4-pin; with grounding lug (vibrator socket) .....
9A472534	Socket, tube: miniature; 7-prong .....
9K580218	Socket, tube: miniature; 8-prong .....

TUNER PARTS - MECHANICAL

Note: Electrical parts of the tuner are included in the Electrical Chassis Parts List.

1X592120	Model MT-77 Manual Tuner: complete....
1X592099	Base, Sleeve, Shields & Channels Assembly .....
1X78034	Carriage Plate, Slug Insulator & Center Guide Rod Assembly .....
42A70184	Clip, core adjustment .....
46B591654	Core, iron & screw .....
14A70876	Insulator, coil sleeve .....
14B78007	Insulator, slug: bakelite .....
2A77596	Nut, floating: without ear (on manual lead screw) .....
2A78005	Nut, floating: with ear (on manual lead screw) .....
64K592064	Plate, tuner front .....
5S7770	Rivet: .088 x 5/32; stl; pol nkl (slug insulator mtg) .....
47A78002	Rod, carriage guide .....
3S7352	Screw, machine: 8-32 x 2"; slotted round head; stl; cad pl (front plate mtg) .....
3A591998	Screw, manual lead (tuning shaft)
43A70881	Sleeve, coil: iron .....
41A77595	Spring, coil slug .....
41A77592	Spring, compression (on manual lead screw) .....
4A21577	Washer, 'C' spring (manual lead screw mtg) .....
4A70873	Washer, coil spacer .....
4A74571	Washer, fishpaper .....
4A70956	Washer, slug insulator .....

©John F. Rider

Compliments of www.nucow.com

MODEL SROB, Ch. OB, Studebaker

GENERAL INFORMATION

TYPE - Manually tuned automotive type superheterodyne receiver specifically designed for installation in 1950 Studebaker cars.

CHASSIS USED - Model OB. Refer to Chassis OB Service Manual for chassis alignment, dial restringing and replacement parts list.

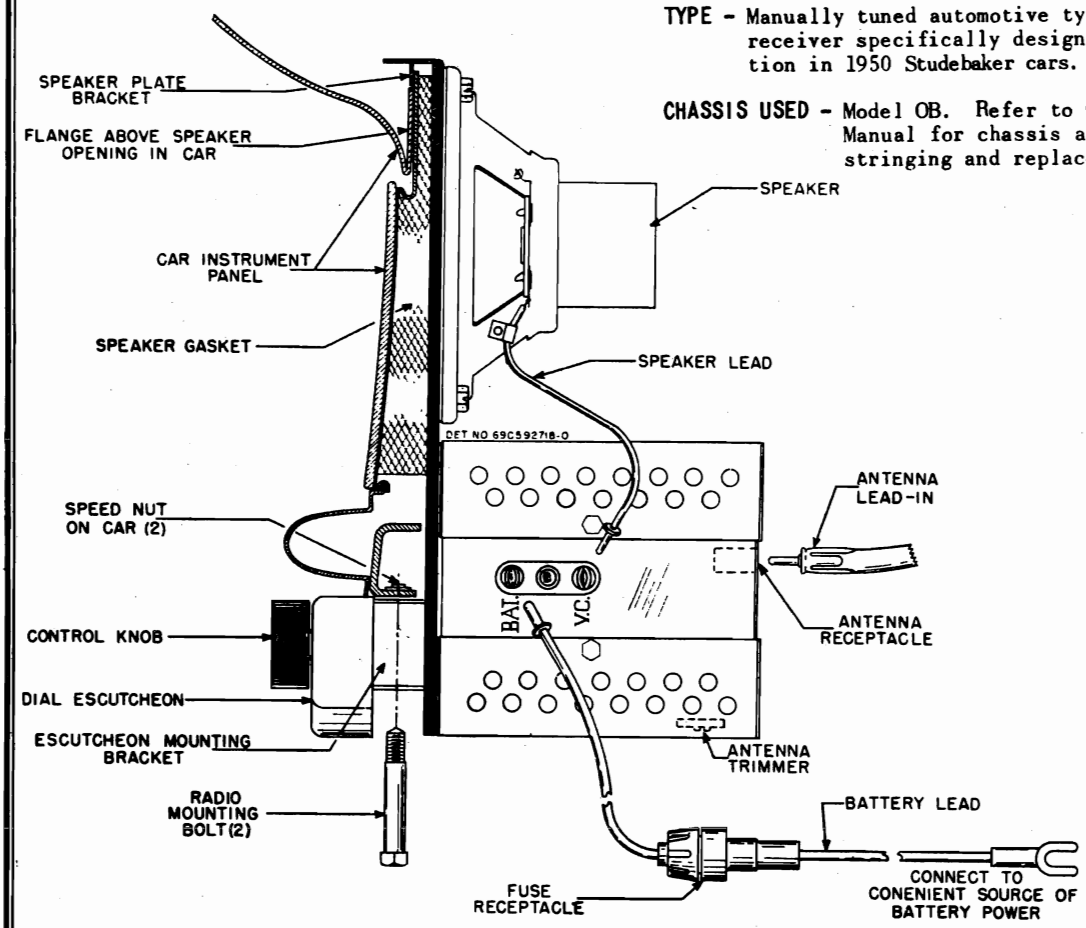

FIGURE 1. RECEIVER INSTALLATION DETAIL

REPLACEMENT PARTS LIST

(For chassis replacement parts, refer to Chassis OB Service Manual)

PART NUMBER	DESCRIPTION
3A592058	Bolt, radio mounting .....
7C592046	Bracket, escutcheon mtg (mounts escutcheon to speaker plate).....
8A4491	Capacitor, noise suppression (generator capacitor) .....
42A591931	Clip, dial scale retaining .....
11M8877	Cord, dial: 20 lb; nylon; black ..
15K592073	Cover, housing (top & bottom) .....
13C592066	Escutcheon, dial: chrome plated....
32C591967	Gasket, speaker: rubber .....
14K590653	Insulator, armite .....
36K591949	Knob, control: tuning & volume .....
1K592062	Pointer & Slider Assembly .....
9B473111	Receptacle, fuse: complete .....
34B592149	Scale, dial: glass .....
3S7370	Screw, machine: 6-32 x 1/4; slotted binderhead; locking type; cad pl (escutcheon mtg) .....
3S7454	Screw, sheet metal: #8 x 1/4; PKZ; plain hex head; cad pl (cover, escutcheon bracket & spkr brkt to chassis mtg) .....
3S8176	Screw, sheet metal: #10 x 3/8 PKZ; plain hex head; cad pl (spkr mtg).
47A592070	Shaft, tuning .....
50B592106 or 50B592479	Speaker, PM: 5 x 7"; 3.2 ohm voice coil .....
1X592189	Speaker Plate & Gasket Assembly: less spkr .....
6A4141	Suppressor, distributor .....
29K5407	Terminal, insulated pin: white (spkr lead) .....
4B592098	Washer, 'C' (tuning shaft retainer)

©John F. Rider

Compliments of www.nucow.com

GENERAL INFORMATION

TYPE - AC table model superheterodyne with self-contained electric clock for controlling automatically the operation of the radio.

RECEIVER MODELS -

Model	Color	Chassis
5C1	Green	HS-228
5C2	Ivory	HS-258
5C3	Walnut	HS-262

TUNING RANGE - 535 to 1620 Kc IF - 455 Kc

TUBE COMPLEMENT -

12BE6	Converter
12BA6	IF Amplifier
12AT6	Det, AVC & AF Amp
50C5	Power Amplifier
35W4	Rectifier

POWER SUPPLY - Operates from 117 volts, 60 cycle, alternating current only. Power consumption 37 watts.

CLOCK - Telechron self-starting electric clock (Telechron basic movement No. C-57, with Motorola face, hands, and escutcheon).

INSTALLATION & OPERATING INSTRUCTIONS

The locations and functions of the clock and radio controls are shown in Figure 1.

NORMAL RADIO OPERATION

Knob "A" on the clock turns the radio on or off. Select stations with the TUNING knob, and adjust volume with the VOLUME control.

A built-in loop antenna eliminates the need for an outside antenna in most locations. When receiving a weak station, rotate the receiver slightly for best signal strength. If additional pick-up is necessary, connect an external antenna to the radio by following the instructions printed on the rear panel. CAUTION: Never connect the radio chassis to a water pipe, radiator, or other ground.

CLOCK OPERATION

The clock will start as soon as the receiver is plugged into an electrical outlet. To set the hands to the correct time, rotate the TIME SET knob (on the rear of the radio) in a clockwise direction only.

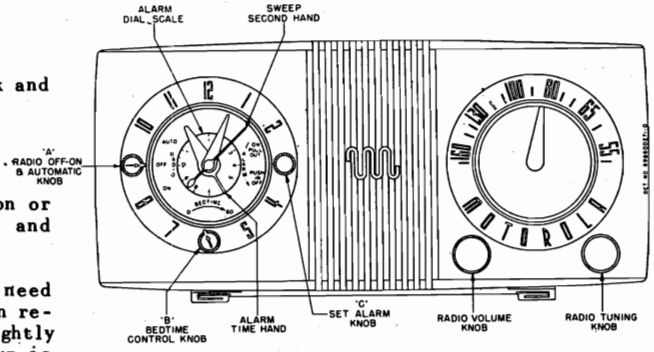

FIGURE 1. OPERATING CONTROLS

BEDTIME CONTROL

The BEDTIME control will turn the radio off after any pre-set interval of time up to one hour.

Turn knob "A" to the "OFF" position and rotate knob "B" to any period of time between 0 and 60 minutes. The radio will be turned off automatically after the proper time has elapsed, and it will remain off until turned on again manually.

AUTOMATIC RADIO OPERATION

The clock controls may be pre-set to turn the radio on automatically at any time up to twelve hours in advance.

Pull out knob "C", rotate it counterclockwise to the desired time on the alarm dial scale, and push the knob back in. Rotate knob "A" first to the "OFF" and then to the "AUTO" position. At the pre-set time, the radio will come on and will continue to play until turned off manually. The alarm will ring also if knob "C" is left pulled out. The radio will come on first and, after an interval of about ten minutes, the alarm will ring.

BEDTIME AND AUTOMATIC OPERATIONS COMBINED

By combining the operations in the two sections above, the radio may be turned off automatically and on again automatically.

When setting the BEDTIME control, rotate knob "A" to the "AUTO" position instead of "OFF". IMPORTANT: It is necessary to turn knob "A" first to the "OFF" position before proceeding to "AUTO", otherwise the radio may not shut off.

ALIGNMENT

NOTE: It is recommended that an isolation transformer be placed between the power line and the receiver to avoid hum and electrical shocks. If an isolation transformer is not available, connect the low side of the signal generator to B- through a .1 mf capacitor.

1. Connect a low range output meter across the speaker voice coil.
2. Connect the low side of the signal generator to B-.
3. Set the signal generator for 400 cycle, 30% modulation.
4. Turn the receiver volume control to maximum.
5. Use a small fibre screwdriver for aligning the IF and diode transformers.
6. As stages are brought into alignment, reduce the signal generator output to a level which produces less than .40 volts (.05 watt) across the voice coil to avoid overloading the receiver.
7. See Figure 2 for adjustment locations and the following chart for procedure.

©John F. Rider
Compliments of www.nucow.com

ALIGNMENT CHART

STEP	DUMMY ANTENNA	GENERATOR CONNECTION	GENERATOR FREQUENCY	GANG SETTING	ADJUST	REMARKS
IF ALIGNMENT						
1.	.1 mf	Grid of conv. (pin 7, 12BE6)	455 Kc	Fully open	1, 2, 3 & 4 (IF cores)	Adjust for maximum
RF ALIGNMENT						
2.	-	-	-	Fully closed	-	Set pointer to horizontal position
3.	-	Grid of conv. (pin 7, 12BE6)	1620 Kc	Fully open	5 (Osc)	Adjust for maximum
4.	-	Radiation loop*	1400 Kc	Tune for max	6 (Ant)	Adjust for maximum

*Connect generator output across 5" diameter, 5 turn loop and couple inductively to receiver loop. Keep loops at least 12" apart.

ALARM OPERATION

To set the alarm, pull out knob "C" and rotate it in a counterclockwise direction to the desired time on the alarm dial scale. The alarm will ring for one hour, or until knob "C" is pushed in. The alarm function is completely independent of the other controls on the clock.

FIGURE 3. STRING DRIVE DETAIL

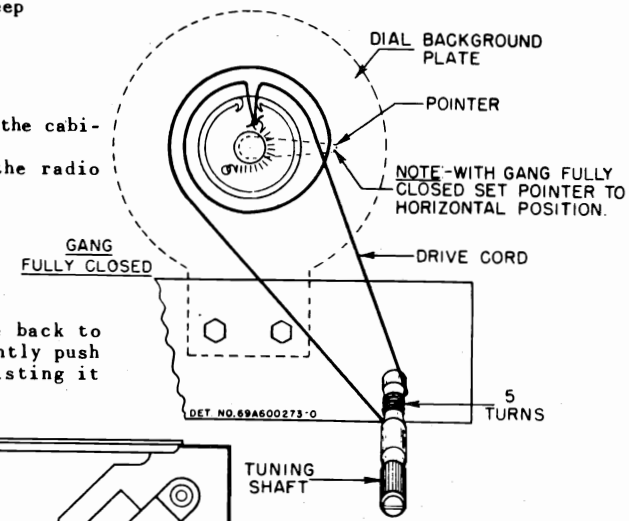

SERVICE NOTES

TO REMOVE RADIO CHASSIS FROM CABINET

1. Pull off the two radio control knobs.
2. Remove the split plugs which hold the loop to the cabinet.
3. From the back of the cabinet, remove the two hex head screws at the rear edge of the radio chassis.
4. Slide the radio chassis and loop from the cabinet.
5. Disconnect the two power leads to the radio chassis.

TO REMOVE CLOCK FROM CABINET

1. Remove radio chassis as above.
2. Remove the three nuts and lockwashers holding the shield behind the clock.
3. Slide the shield from the cabinet.
4. Turn the BEDTIME control knob to "60".
5. Pull out the ALARM set knob.
6. Turn the RADIO control knob to "AUTO".
7. While observing the clock from the back to avoid bending or breaking any parts, gently push the clock forward, at the same time twisting it slightly to eliminate binding.

TO REPLACE CLOCK DIAL FACE

1. Remove the clock from the cabinet as above.
2. Pull off the RADIO control and BEDTIME knobs.
3. Turn the ALARM set knob clockwise to remove.
4. Remove the escutcheon and crystal.
5. Carefully pull off the three hands.
6. Remove the alarm dial and the clock face.
7. Turn the radio control shaft to "AUTO" position.
8. Slowly rotate the time set shaft clockwise until the switch contacts behind the radio control shaft close.
9. Reassemble the clock face, alarm dial and three hands. Set all the hands to indicate 12 o'clock. Set Figure 12 on the alarm dial to index with the small pointer on the hour hand.
10. Replace the crystal, the escutcheon, and the knobs.
11. Check the automatic operation to be sure the switch contacts close at the time indicated on the alarm dial.

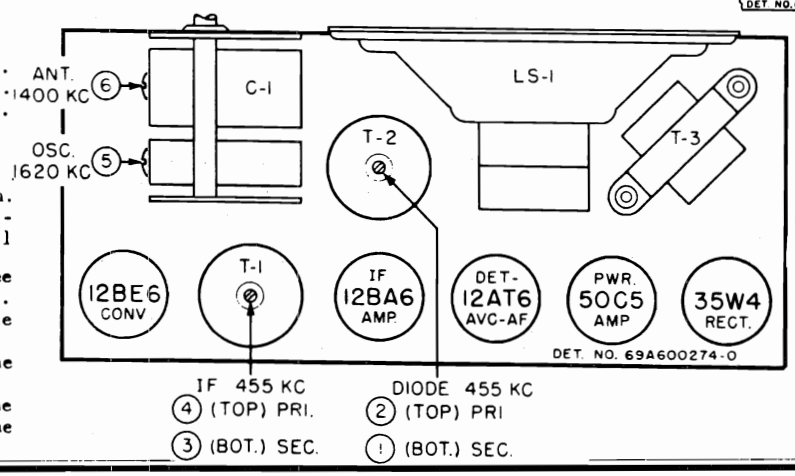

FIGURE 2. TUBE & TRIMMER LOCATIONS

©John F. Rider

Compliments of www.nucow.com

MODELS 5C1, Ch. HS-228; 5C2, Ch. HS-258; 533, Ch. HS-262

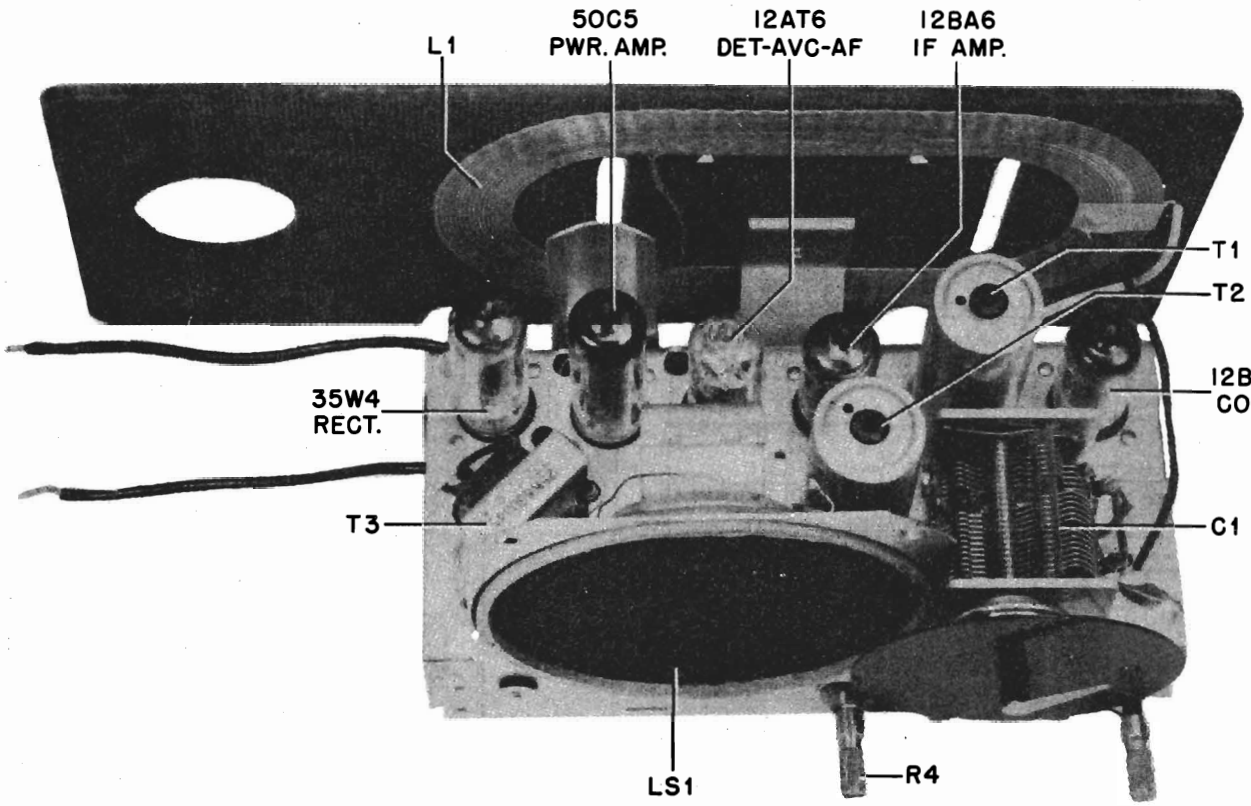

FIGURE 4. TOP VIEW OF CHASSIS

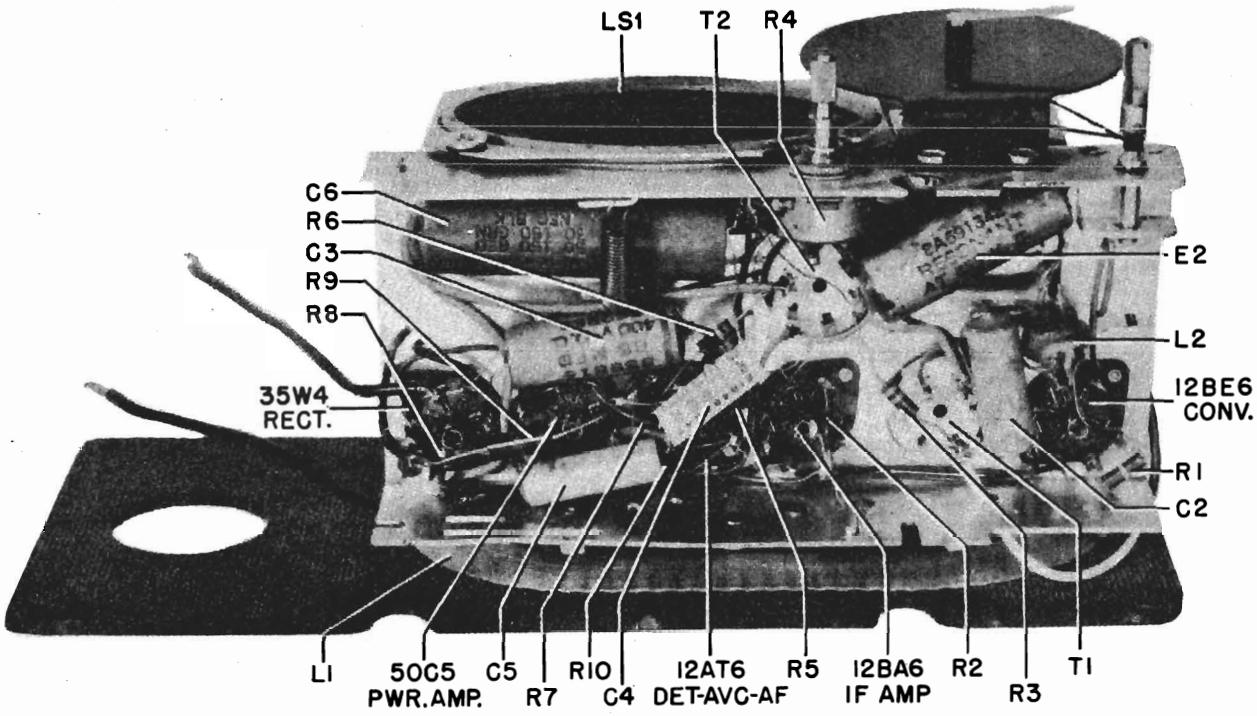

FIGURE 5. BOTTOM VIEW OF CHASSIS USING MULTIPLE CERAMIC CAPACITOR PLATE

©John F. Rider

Compliments of www.nucow.com

MODELS 5C1, Ch. HS-228; 5C2, Ch. HS-258; 533, Ch. HS-262

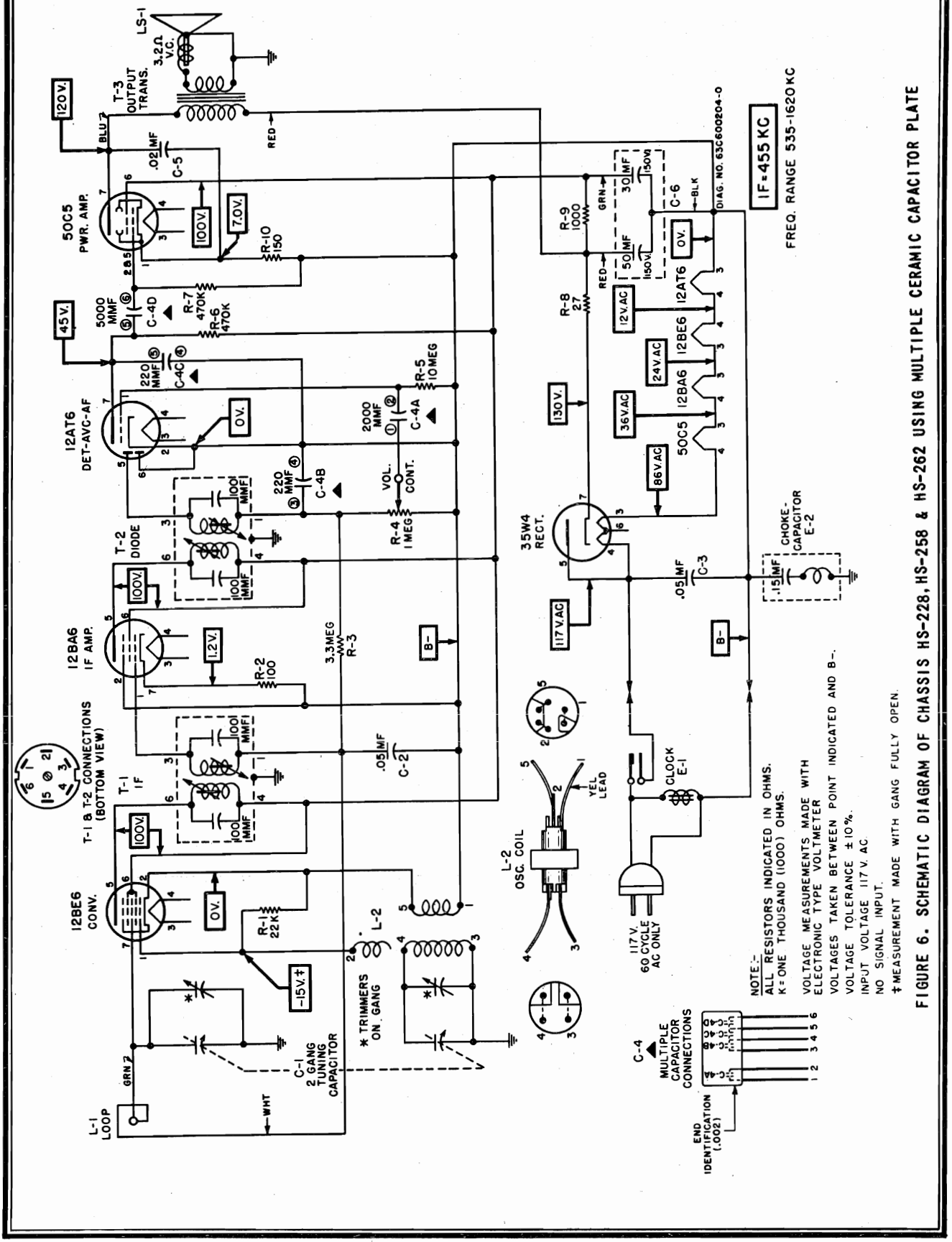

FIGURE 6. SCHEMATIC DIAGRAM OF CHASSIS HS-228, HS-258 & HS-262 USING MULTIPLE CERAMIC CAPACITOR PLATE

©John F. Rider

Compliments of www.nucow.com

FIGURE 7. SCHEMATIC DIAGRAM OF CHASSIS HS-228, HS-258 & HS-262 USING MULTIPLE CERAMIC CAPACITOR-RESISTOR PLATE

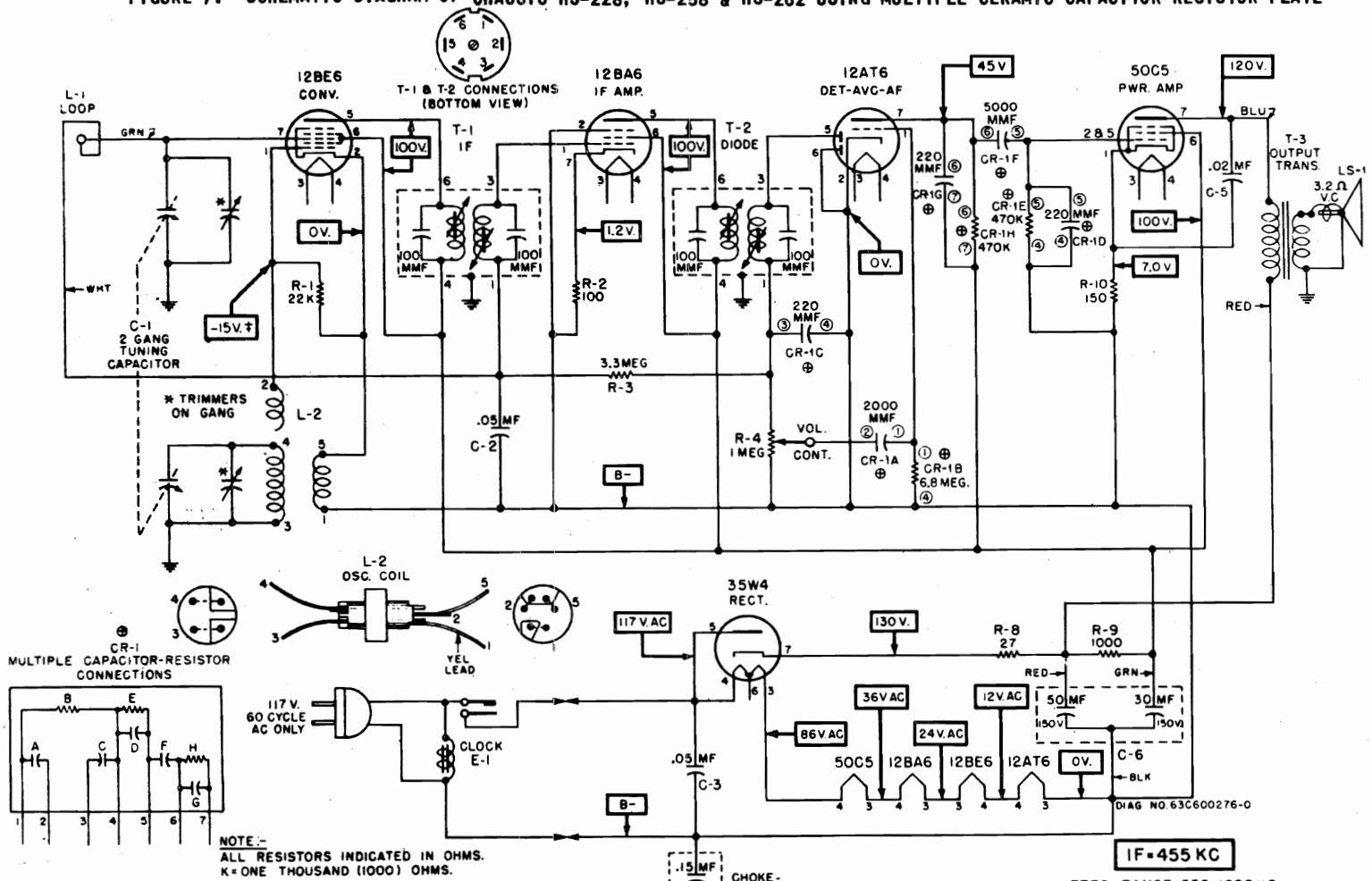

NOTE:-
ALL RESISTORS INDICATED IN OHMS.
K=ONE THOUSAND (1000) OHMS.

VOLTAGE MEASUREMENTS MADE WITH ELECTRONIC TYPE VOLTMETER.
VOLTAGES TAKEN BETWEEN POINT INDICATED AND B-
VOLTAGE TOLERANCE ±10%.
INPUT VOLTAGE 117 V. AC.
NO SIGNAL INPUT.
‡MEASUREMENT MADE WITH GANG FULLY OPEN

REPLACEMENT PARTS LIST

NOTE: When ordering parts, specify model number of set in addition to part number and description of part.

REF. NO.	PART NO.	DESCRIPTION
CHASSIS PARTS - ELECTRICAL		
CAPACITORS		
C-1	19B600021	Variable: 2 gang; with pulley...
C-2	8R9821	Paper: .05 mf 200V .....
C-3	8R9816	Paper: .05 mf 400V .....
C-4	21B482847	Ceramic, multiple: 2000 mmf, 220 mmf, 220 mmf, 5000 mmf .....
C-5	8R9802	Paper: .02 mf 400V .....
C-6	23B600855	Electrolytic: 50-30 mf/150V ...

© John F. Rider

Compliments of www.nucow.com

PART NUMBER		DESCRIPTION
CAPACITOR-RESISTOR		
CR-1	21B601007	Capacitor-Resistor: 2000, 220, 220, 5000, 220 mmf; 6.8 meg; 470,000, 470,000 ohms .....
CLOCK		
E-1	59C600007	Electric Clock Assembly: Telechron movement No. C-57, with Motorola face, hands, crystal, escutcheon and knobs (for green cabinet)(5C1) .....
	59K600198	Same as above except color (for ivory cabinet)(5C2) .....
	59K600788	Same as above except color (for walnut cabinet)(5C3) .....
CHOKE & CAPACITOR		
E-2	8A690487	Choke & .15 mf paper capacitor..
COILS		
L-1	24C600029	Antenna Loop and Panel Assembly.
L-2	24B680364	Oscillator coil .....
SPEAKER		
LS-1	50C600017 or 50C600857	Speaker: 4" PM; 3.2 ohm VC .
RESISTORS		
		Note: All resistors are insulated carbon type unless otherwise specified
R-1	6R6028	22,000 20% ½W .....
R-2	6R6018	100 20% ½W .....
R-3	6R2118	3.3 meg 20% ½W .....
R-4	18A600018	Volume control: 1 meg .....
R-5	6R2109	10 meg 20% ½W .....
R-6	6R6032	470,000 20% ½W .....
R-7	6R6032	470,000 20% ½W .....
R-8	6R5683	27 10% ½W .....
R-9	6R3953	1000 20% 1W .....
R-10	6R3992	150 20% ½W .....
TRANSFORMERS		
T-1	24B482863	IF Transformer (brown dot): 455 Kc: complete with capacitor and cores; less shield .....
T-2	24B482865	Diode Transformer (red dot): 455 Kc: complete with capacitors and cores; less shield .....
T-3	25K680345	Output Transformer .....

CHASSIS PARTS - MECHANICAL

7A478118	Bracket, loop mtg .....
7A77337	Bracket, tuning shaft .....
42B482867	Clip, spring: blued finish (holds IF transformers) .....
11M8944	Cord, dial: 18 lb; black .....
5A484268	Grommet, speaker mtg: rubber .....
14A478119	Insulator, loop brkt mtg: fibre...
4S7691	Lockwasher, internal: 3/8; cad pl (vol control mtg) .....
2A780465	Nut, knurled (vol control mtg).....
64A600025	Plate, dial background: green (HS-228)
64K600193	Plate, dial background: ivory (HS-258)
64K600779	Plate, dial background: walnut (HS-262)
52A600027	Pointer, dial: light green color (HS-228 & HS-262) .....
52K600194	Pointer, dial: dark green color (HS-258)
5S7771	Rivet: .088 x 3/16 stl; nkl pl (tube socket mtg) .....
5S7707	Rivet: .122 x 5/32 stl; nkl pl (output trans mtg) .....
5S7701	Rivet: .122 x 3/16 stl; nkl pl (tuning shaft brkt mtg) .....
5S7703	Rivet: .122 x 7/32 stl; nkl pl (loop bracket & spkr mtg) .....
3S7247	Screw, machine: 6-32 x 3/16 slotted locking hex head; cad pl (gang mtg) .....
3S7506	Screw, sheet metal: #6 x 1/4 PKZ plain hex head; cad pl (dial background plate mtg) .....
3S7467	Screw, sheet metal: #8 x 3/8 PKZ plain hex head; cad pl (loop mtg).....
47A600022	Shaft, tuning .....
26K485936	Shield, coil (for IF transformers)
26A478117	Shield, electrostatic (on rear of chassis) .....
43A600095	Sleeve, paper: black (on pointer shaft)(HS-228, HS-262) .....
43K600195	Sleeve, paper: ivory (on pointer shaft)(HS-258) .....
9A472534	Socket, tube: miniature; 7-prong .
41A73996	Spring, tension (electrolytic mtg).
41A73619	Spring, tension (gang drive cord).
4A70015	Washer, 'C' (tuning shaft mtg)..
4S7633	Washer, flat: 9/16 x 11/64 x 033 stl; cad pl (loop mtg) .....
14A11493	Washer, shoulder: fibre (loop bracket mtg) .....

CABINET PARTS

16E600005	Cabinet, table model: plastic; green (5C1) .....
16K600199	Cabinet, table model: plastic; ivory (5C2) .....
16K600791	Cabinet, table model: plastic; walnut (5C3) .....
28A600064	Connector, wire (connects clock & radio power leads) .....
61A600001	Crystal; plastic (cover over radio dial)
13K600003	Escutcheon, radio dial: green (5C1)...
13K600197	Escutcheon, radio dial: ivory (5C2)...
13K600790	Escutcheon, radio dial: walnut (5C3)..
14A16304	Grommet, fibre (on clock shield).....
36A600065	Knob, radio control: green plastic(5C1)
36K600192	Knob, radio control: ivory plastic(5C2)
36K600787	Knob, radio control: walnut plastic(5C3)
4S7667	Lockwasher: #4 ext: cad pl (clock shield mtg) .....
13A792195	Medallion: brass (on front of speaker grille) .....
2S7019	Nut, hex: 4-40 x 1/4 stl; cad pl (clock shield mtg) .....
38A25507	Plug, split (mounts loop to cabinet) .....
3S476083	Screw, machine: 6-32 x 5/16 slotted locking hex head; cad pl (radio chassis mtg) .....
1X600799	Shield, clock: with grommet (covers rear of clock) .....
2S490840	Speednut: for 1/16" stud (medallion mtg) .....
11M488253	Tape, aluminum foil (inside top of cabinet) .....

CLOCK PARTS

Note: The following Motorola parts are for use with the basic Telechron clock movement No. C-57.

34K600993	Alarm Dial: green color (5C1) .....
34K600994	Alarm Dial: ivory color (5C2) .....
34K600995	Alarm Dial: walnut color (5C3) .....
30K680352	Cord, line: with plug; 6 ft long .....
61A600001	Crystal: plastic (cover over face of clock) .....
34K600990	Dial Face: green color (5C1) .....
34K600991	Dial Face: ivory color (5C2) .....
34K600992	Dial Face: walnut color (5C3) .....
13C600002	Escutcheon, clock: green color(5C1) ..
13K600196	Escutcheon, clock: ivory color (5C2) .
13K600789	Escutcheon, clock: walnut color (5C3).
52K600996	Hand, hour: light green color (5C1 & 5C3) .....
52K600997	Hand, hour: dark green color (5C2)....
52K600998	Hand, minute: light green color (5C1 & 5C3) .....
52K600999	Hand, minute: dark green color (5C2)..
52K601001	Hand, second: brass .....
36K600987	Knob, clock control: plain; green (5C1)
36K600988	Knob, clock control: plain; ivory (5C2)
36K600989	Knob, clock control: plain; walnut(5C3)
36K600984	Knob, clock control: with arrow; green (5C1) .....
36K600985	Knob, clock control: with arrow; ivory (5C2) .....
36K600986	Knob, clock control: with arrow; walnut (5C3) .....
36K601002	Knob, time set .....

©John F. Rider
Compliments of www.nucow.com

MODELS 5H11U, 5H12U, 5H13U, Ch. HS-244

GENERAL INFORMATION

TYPE - AC-DC table model superheterodyne receiver with loop antenna.

RECEIVER MODELS -

Model	Color
5H11U	Walnut
5H12U	Ivory
5H13U	Green

TUNING RANGE - 535 to 1620 Kc IF - 455 Kc

TUBE COMPLEMENT - 12BE6 - Converter
12BA6 - IF Amplifier
12AT6 - Det, AVC & 1st AF Amp
50C5 - Power Amplifier
35W4 - Rectifier

POWER SUPPLY - 117 volts AC or DC, 35 watts

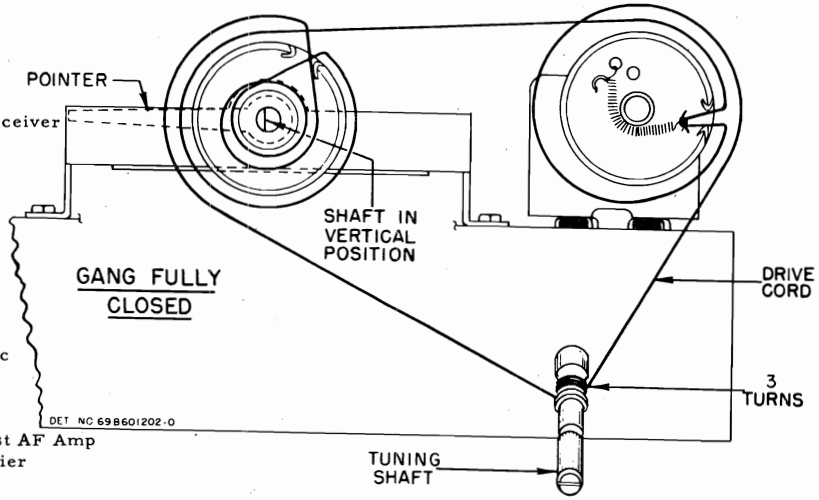

FIGURE 1. STRING DRIVE DETAIL

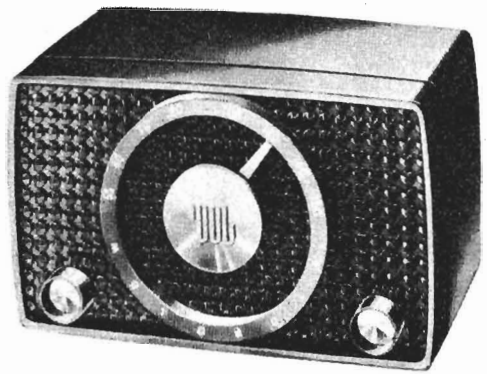

INSTALLATION & OPERATING INSTRUCTIONS

POWER SWITCH AND VOLUME CONTROL. Operated with the left-hand knob. NOTE: Reverse the line cord plug in the wall outlet if radio does not operate from DC. When operating from AC, reversing the line cord plug in the wall outlet may sometimes improve reception

TUNING. Tune stations with the right-hand knob.

ANTENNA. A built-in loop antenna eliminates the need for an outside antenna in most locations. When receiving a weak station, rotate the receiver slightly for best signal strength. If additional pick-up is necessary, connect an external antenna to the radio by following the instructions printed on the rear panel. CAUTION: Never connect the radio chassis to a water pipe, radiator, or other ground.

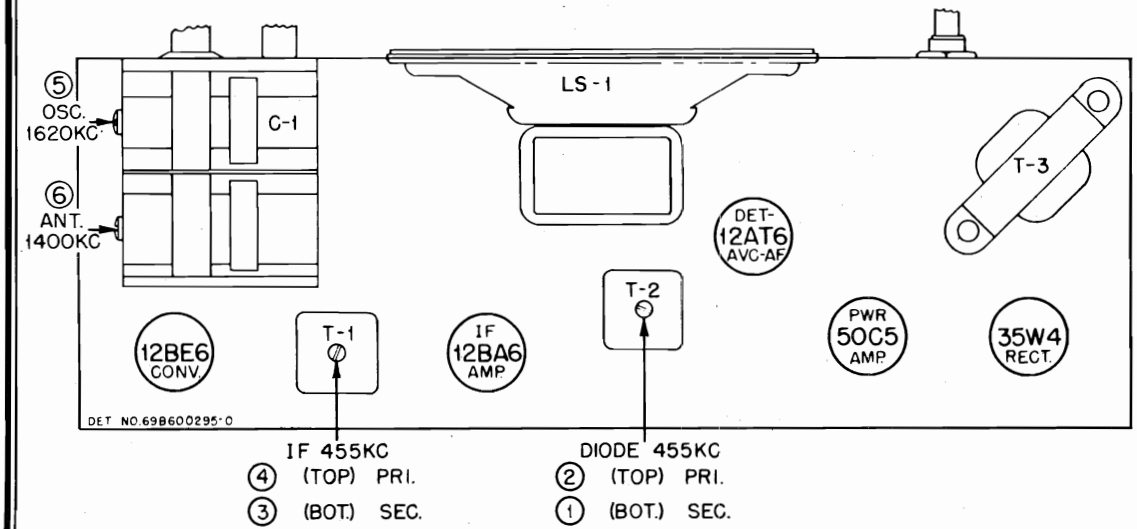

FIGURE 2. TUBE & TRIMMER LOCATIONS

SERVICE NOTES

The chassis of this receiver is isolated from the AC power line circuit by a capacitor to eliminate the shock hazard when handling the receiver. However, as an additional precaution when aligning or servicing the receiver from AC, an isolation transformer should be inserted between the power line and the chassis.

To remove the chassis from the cabinet:

1. Pull off the two radio control knobs.
2. Pull off the brass cover over the pointer.
3. Pull off the pointer.
4. Remove the split plugs which hold the loop to the cabinet.
5. From the back of the cabinet, remove the two hex head screws at the rear edge of the radio chassis.
6. Slide the radio chassis and loop from the cabinet.

©John F. Rider

Compliments of www.nucow.com

MODELS 5H11U, 5H12U,
5H13U, Ch. HS-244

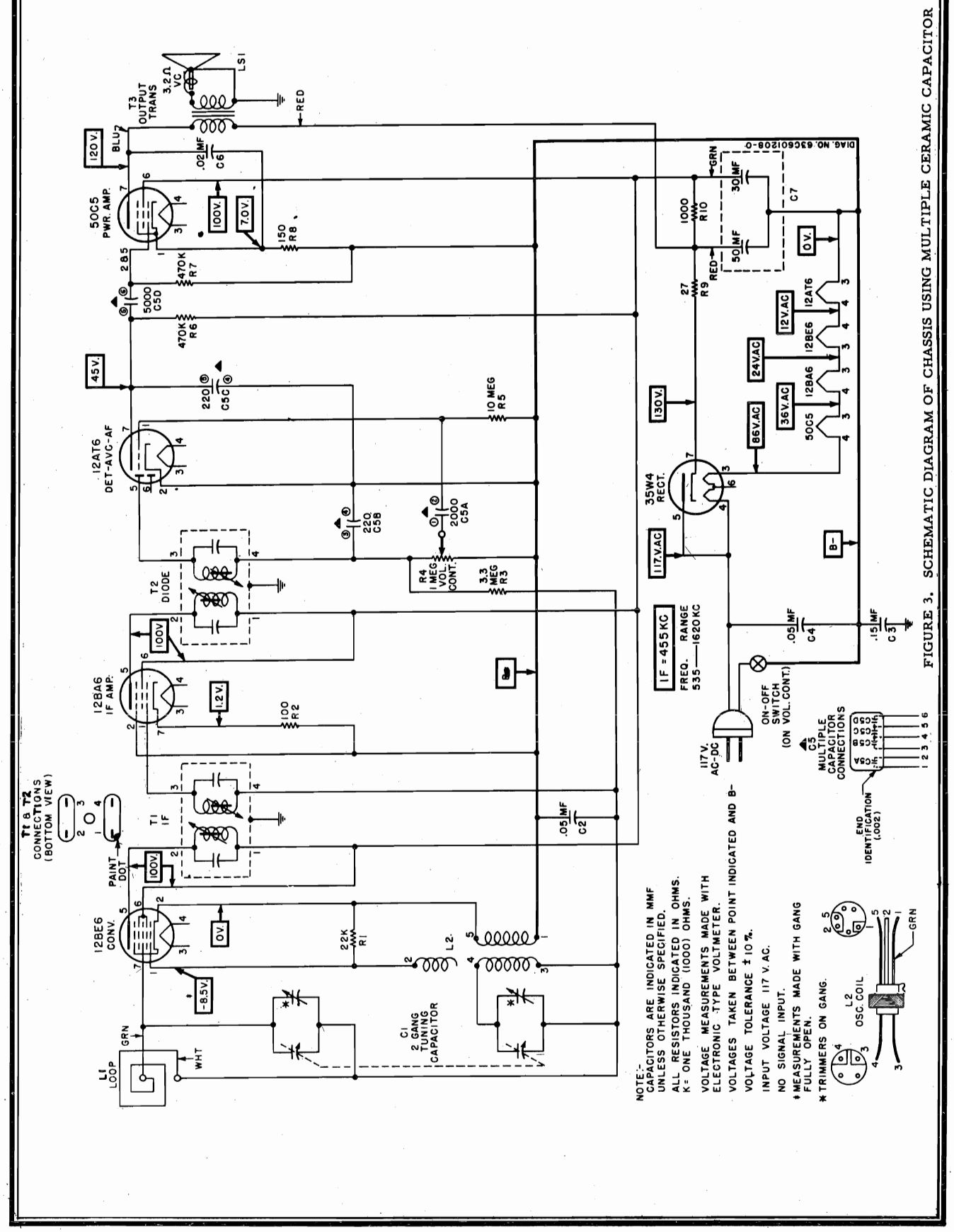

FIGURE 3. SCHEMATIC DIAGRAM OF CHASSIS USING MULTIPLE CERAMIC CAPACITOR

©John F. Rider

Compliments of www.nucow.com

MODELS 5H11U, 5H12U,
5H13U, Ch. HS-244

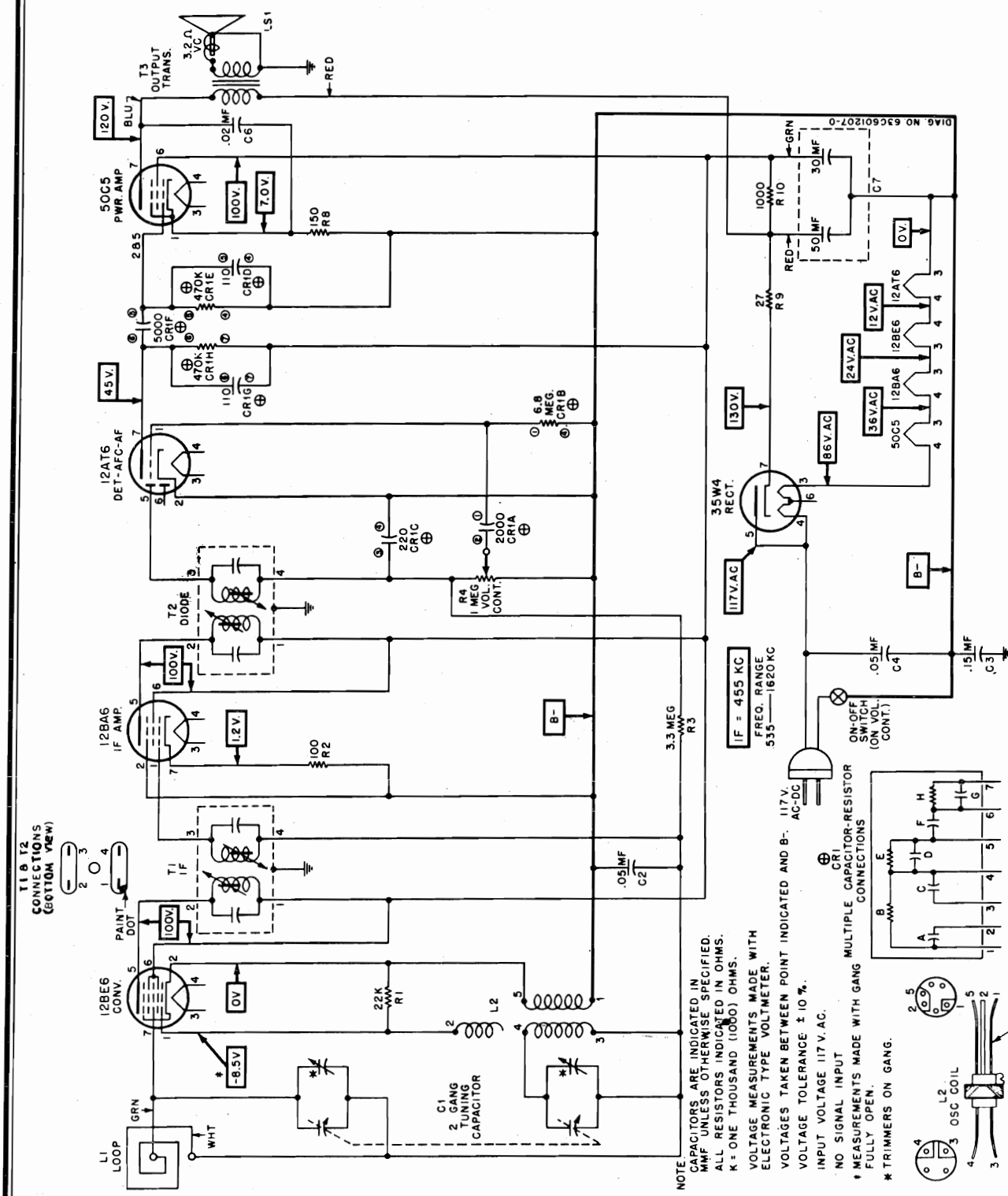

FIGURE 4. SCHEMATIC DIAGRAM OF CHASSIS USING MULTIPLE CERAMIC CAPACITOR-RESISTOR

©John F. Rider

Compliments of www.nucow.com

ALIGNMENT

NOTE: It is recommended that an isolation transformer be placed between the power line and the receiver to avoid hum and electrical shocks. If an isolation transformer is not available, connect the low side of the signal generator to B- through a .1 mf capacitor.

1. Connect a low range output meter across the speaker voice coil.
2. Connect the low side of the signal generator to B-.
3. Set the signal generator for 400 cycle, 30% modulation.
4. Turn the receiver volume control to maximum.
5. Use a small fibre screwdriver for aligning the IF and diode transformers.
6. As stages are brought into alignment, reduce the signal generator output to a level which produces less than .40 volts (.05 watt) across the voice coil to avoid overloading the receiver.
7. See Figure 2 for adjustment locations and the following chart for procedure.

ALIGNMENT CHART

STEP	DUMMY ANTENNA	GENERATOR CONNECTION	GENERATOR FREQUENCY	GANG SETTING	ADJUST	REMARKS
IF ALIGNMENT						
1.	.1 mf	Grid of conv. (pin 7, 12BE6)	455 Kc	Fully open	1, 2, 3 & 4 (IF cores)	Adjust for maximum.
RF ALIGNMENT						
2.	-	Grid of conv. (pin 7, 12BE6)	1620 Kc	Fully open	5 (Osc)	Adjust for maximum.
3.	-	Radiation loop*	1400 Kc	Tune for max	6 (Ant)	Adjust for maximum.

*Connect generator output across 5" diameter, 5 turn loop and couple inductively to receiver loop. Keep loops at least 12" apart.

REPLACEMENT PARTS LIST

NOTE: When ordering parts specify model number of set in addition to part number and description of part.

Ref. No.	Part Number	Description
CHASSIS PARTS - ELECTRICAL		
Capacitors		
C-1	19B600483	Variable, 2 gang: with pulley .....
C-2	8R9821	Paper: .05 mf 200V .....
C-3	8R9816	Paper: .05 mf 400V .....
C-4	8R9843	Paper: .15 mf 200V .....
C-5	21B482847	Ceramic, multiple: 2000,220,220, 5000 mmf .....
C-6	8R9802	Paper: .02 mf 400V .....
C-7	23B600855	Electrolytic: 50-30 mf/150V .....
Capacitor-Resistor		
CR-1	21B601007	2000,110,110,5000 mmf; 6.8 meg; 470,000, 470,000 ohms .....
Coils		
L-1	24C600518	Loop Antenna Assembly: includes back panel .....
L-2	24K600812	BC Oscillator .....
Speaker		
LS-1	50C691401	Speaker, PM: 4"; 3.2 ohm VC ...
Resistors		
		Note: All resistors are insulated carbon type unless otherwise specified.
R-1	6R6028	22,000 20% 1/2W .....
R-2	6R6018	100 20% 1/2W .....
R-3	6R2118	3.3 meg 20% 1/2W .....
R-4	18K600473	Volume control: 1 meg; includes on-off switch .....
R-5	6R2109	10 meg 20% 1/2W .....
R-6	6R6032	470,000 20% 1/2W .....
R-7	6R6032	470,000 20% 1/2W .....
R-8	6R3992	150 20% 1/2W .....
R-9	6R5683	27 10% 1/2W .....
R-10	6R3953	1000 20% 1W .....
Transformers		
T-1,2	24B485553	IF and Diode, 455 Kc: complete; including padding capacitors and tuning cores .....
T-3	25K485973	Output .....

Part Number	Description
CHASSIS PARTS - MECHANICAL	
7K485971	Bracket, loop back mtg .....
7A600476	Bracket, tuning shaft mtg .....
1X600606	Bracket and Bushing Assembly, pointer
42A485548	Clip, coil can mtg .....
11M8944	Cord, dial: 18 lb black .....
30A470651	Cord, line and plug: 6 ft long .....
5A19658	Eyelet, spacer (gang mtg) .....
5A70404	Grommet, rubber (gang mtg) .....
14A482844	Insulator, cord outlet .....
29R3010	Lug, soldering .....
2S7051	Nut, hex: Palnut (volume control mtg)
1X600590	Pulley and Bushing Assembly, pointer drive
5S7771	Rivet: .088 x 3/16 stl; nkl pl (tube socket mtg) .....
5S7707	Rivet: .122 x 5/32 stl; nkl pl (tube shield mtg, output transformer mtg and tuning shaft bracket mtg) ....
3S2294	Screw, machine: 6-32 x 1/2; lockscrew; plain hex head; stl; cad pl (gang mtg) .....
3S7477	Screw, machine: 8-32 x 1/4; type #1; plain hex head; stl; cad pl (back mtg) .....
3S2695	Screw, sheet metal: #6 x 3/16 PKZ plain hex head; stl; cad pl (pointer bracket mtg) .....
3S3398	Screw, sheet metal: #6 x 3/8 PKZ plain hex head; stl; cad pl (loop bracket mtg) .....
3S7454	Screw, sheet metal: #8 x 1/4 PKZ plain hex head; stl; cad pl (speaker mtg)
3S7148	Setscrew: 6-32 x 1/8; Allen head; stl; cad pl (pointer drive pulley retainer).
47K600598	Shaft, pointer: brass .....
1K600594	Shaft and Pulley Assembly, tuning ....
26A481521	Shield, spring (for 12BA6 tube) .....
9A472534	Socket, tube: 7-prong .....
9K580218	Socket, tube: 8-prong .....
41A73996	Spring, tension (electrolytic mtg) ...
41A14244	Spring, tension (drive cord) .....
4K692188	Washer, "C" (tuning shaft retainer and pointer shaft retainer) .....
4S7633	Washer, flat: 9/16 x 11/64 x .033 thick; stl; cad pl (loop back mtg) .....
4K482859	Washer, insulated shoulder .....
CABINET PARTS	
16E600461	Cabinet, table model: walnut (5H11U) .
16K600463	Cabinet, table model: ivory (5H12U) ..
16K600465	Cabinet, table model: green (5H13U) ..
15B600569	Cover, pointer .....
36B600566	Knob, control: walnut (5H11U) .....
36K600567	Knob, control: ivory (5H12U) .....
36K600568	Knob, control: green (5H13U) .....
38A25507	Plug, split (back mtg) .....
52B600537	Pointer, dial .....
3S3371	Screw, sheet metal: #8 x 3/8 PKF plain hex head; stl; cad pl (chassis mtg) ...

©John F. Rider

Compliments of www.nucow.com

MODELS 5J1, 5L1, Ch. HS-250; 5J1U, 5L1U, Ch. HS-224

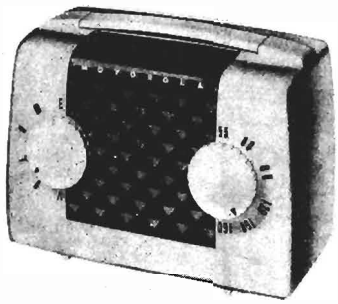

5L1 SERIES

5J1 SERIES

GENERAL INFORMATION

TYPE - A three-power (AC/DC, Battery) portable receiver. Four miniature type tubes and a selenium rectifier are used in a superheterodyne circuit.

MODEL	COLOR	CHASSIS
5L1	Tan	HS-250
5L1U	Tan	HS-224
5J1	Black	HS-250
5J1U	Black	HS-224

TUNING RANGE - 535 to 1620 Kc **IF** - 455 Kc

TUBE COMPLEMENT - 1R5 - Converter
1U4 - IF Amplifier
1U5 - Det, AVC & 1st AF Amp
3S4 - Power Amplifier
Rectifier - Selenium type (for AC/DC operation)

POWER SUPPLY - Operates from 117V AC/DC (15 watts) or from the following batteries:

2 - 1½V flashlight cells (Eveready #950 or equivalent)

1 - 67½V "B" battery (Eveready #467 or equivalent)

OPERATING INSTRUCTIONS

TO OPEN FRONT COVER (5J1 & 5J1U ONLY). The front covers of the models 5J1 and 5J1U contain the loop antenna. They may be opened simply by lifting them upward with the fingers. A special hinge holds the covers in either the closed, half-opened, or fully open position.

VOLUME CONTROL & OFF-ON SWITCH. The "off-on" switch and volume control are combined and are operated with the left-hand knob.

TUNING CONTROL. Stations are tuned in with the right-hand knob.

TO TURN OFF. Turn the receiver "off" by rotating the volume knob to the left until a click is heard.

TO OPEN BACK COVER. The back cover may be opened by inserting the fingertips into the slots in the cover and pulling it open. When closing the cover be careful not to pinch the power line cord or other leads between the cover and the cabinet.

117 VOLT AC OR DC OPERATION. The power cord is located inside the cabinet and may be reached by opening the back cover. Pass the line cord through the slot on the side of the receiver, and plug it into any 117 volt AC or DC power outlet. If the receiver does not operate from DC power, reverse the plug in the power outlet. When operating from AC power, reception may sometimes be improved by reversing the power plug in the outlet. It is not necessary that batteries be installed if the receiver is to be operated only from house power lines.

BATTERY OPERATION. Open the back cover and install the batteries, following the instructions on the label inside the back cover (or see Figure 1). Insert the line cord plug into the receptacle on the chassis, or the receiver will not play from batteries. If the receiver is to be operated for a long period of time from 117 volts AC or DC, or is to be placed in storage, remove the batteries and store in a cool place. **IMPORTANT:** Never leave low or run-down batteries in the receiver, as they will leak or swell and damage it.

ANTENNA. A loop antenna is built into the front cover of models 5J1 and 5J1U and into the rear cover of models 5L1 and 5L1U. Because of the slightly directional characteristics of the loop antenna, reception from some stations may be improved by rotating the entire receiver. In extremely noisy locations, rotate the receiver until minimum noise and maximum signal pickup are obtained.

BATTERY REPLACEMENT. If low volume or fuzzy tone is noticed when operating from batteries, replace the flashlight cells. Normally, the 67½V "B" battery will last for 3 or 4 changes of the flashlight cells. The condition of the batteries will not affect the operation of the receiver from 117 volts AC or DC. Complete battery replacement instructions will be found inside the cabinet back cover (or see Figure 1).

©John F. Rider

Compliments of www.nucow.com

MODELS 5J1, 5L1,
Ch. HS-250: 5J1U.
5L1U, Ch. HS-224

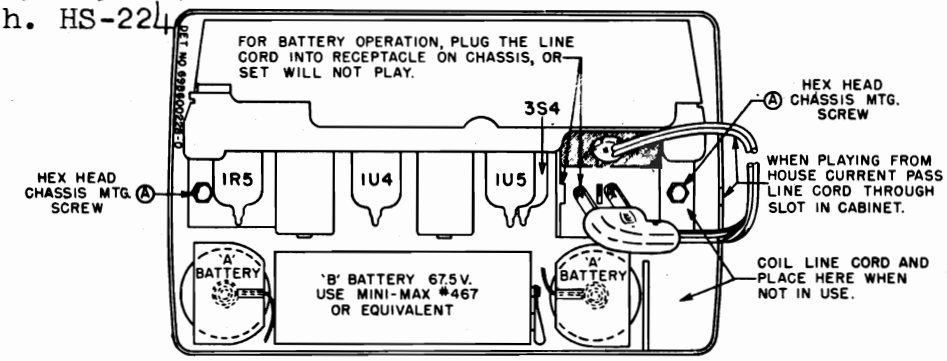

NOTE:- 'A' BATTERIES: USE TWO 1-1/2 V. FLASHLIGHT CELLS-EVEREADY #950 OR EQUIVALENT. INSTALL 'A' BATTERIES SO SPRING CONTACTS BOTTOM OF BATTERIES.

FIGURE 1. BATTERY INSTALLATION & CHASSIS REMOVAL INSTRUCTIONS

ALIGNMENT

NOTE: The receiver may be operated either from a battery or from the commercial power lines during alignment. If AC power is used, it is recommended that an isolation transformer be placed between the power line and the receiver. If an isolation transformer is not available, connect the low side of the signal generator to B- through a .1 mf capacitor.

1. Connect a low range output meter across the speaker voice coil.
2. Connect the low side of the signal generator to B-.
3. Set the signal generator for 400 cycle, 30% modulation.
4. Turn the receiver volume control to maximum.
5. Use a small fibre screwdriver for aligning the IF and diode transformers.
6. As stages are brought into alignment, reduce the signal generator input to keep the output of the receiver at approximately .05 watt (.05 watt = .40 volts on the output meter) to avoid overloading the receiver.
7. See Figure 2 for adjustment locations and the following chart for procedure.

ALIGNMENT CHART

STEP	DUMMY ANTENNA	GENERATOR CONNECTION	GENERATOR FREQUENCY	GANG SETTING	ADJUST	REMARKS
IF ALIGNMENT						
1.	.1 mf	Grid of conv. (pin 6, 1R5)*	455 Kc	Fully open	1, 2 & 3	Adjust for maximum.
RF ALIGNMENT						
2.	-	Grid of conv. (pin 6, 1R5)*	1620 Kc	Fully open	4	Adjust for maximum.
3.	-	-	-	-	-	Install chassis in cabinet, leaving output meter connected to speaker. NOTE: Batteries should be in cabinet.
4.	-	Radiation loop**	1400 Kc	Tune for maximum	5	Adjust for maximum. Trimmer is reached through hole under plug button on side of cabinet.

*On chassis HS-250 return the grid of the converter tube to AVC either through the loop or through a 4.7 meg resistor (as in chassis HS-224).

**Connect generator output across 5" diameter, 5 turn loop and couple inductively to receiver loop. Keep loops at least 12" apart.

©John F Rider

Compliments of www.nucow.com

MODELS 5J1, 5L1, Ch. HS-250; 5J1U, 5L1U, Ch. HS-224

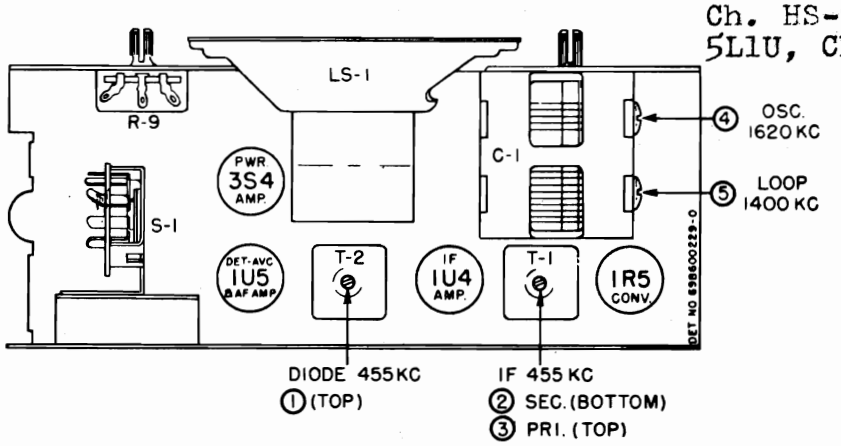

FIGURE 2. TUBE & TRIMMER LOCATIONS

SERVICE NOTES

The chassis of this receiver is isolated from the AC power line circuit by a capacitor-choke assembly to eliminate the shock hazard when handling the receiver. However, as an additional precaution when aligning or servicing the receiver from AC, an isolation transformer should be inserted between the power line and the chassis.

The tubes are exposed when the rear cover is opened. It is not necessary to remove the chassis to replace tubes.

To remove the chassis from the cabinet:

1. Pull off the two control knobs on the front of the cabinet.
2. Open the rear cover and remove the batteries.
3. Disconnect the two loop antenna leads from the chassis.
4. Remove the two hex head screws holding the chassis to the cabinet ("A" - "A" in Figure 1).
5. Slide the chassis out of the cabinet.

REPLACEMENT PARTS LIST

REF. NO.	PART NO.	DESCRIPTION
CHASSIS PARTS - ELECTRICAL		
CAPACITORS		
C-1	19K692008	Variable, 2-gang .....
C-2	21K481377	Ceramic: 500 mmf 500V .....
C-3	21K482726	Ceramic, disc type: 10,000 mmf 450V .....
C-4	21K482726	Ceramic, disc type: 10,000 mmf 450V .....
C-5	21K77373	Ceramic: 47 mmf 500V .....
C-6	8K71213	Paper: .05 mf 100V .....
C-7	8K71213	Paper: .05 mf 100V .....
C-8	8K471635	Paper: .05 mf 400V .....
C-9	23B691995	Electrolytic: 40-40 mf 150V/ 250 mf 10V .....
C-10A, B,C,D	21K691992	Ceramic, multiple: 2000 mmf, 100 mmf, 100 mmf, 5000 mmf .....
C-11	21K482726	Ceramic, disc type: 10,000 mmf 450V .....
C-12	21A470789	Ceramic, disc type: 5000 mmf 450V
CHOKE & CAPACITOR		
E-2	24K691986	Choke & .05 mf 200V paper capacitor .....
RECTIFIER		
E-1	48B791092	Selenium rectifier: half-wave...
COILS		
L-1	1X692056	Antenna Loop & Leads Assembly (5L1 & 5L1U) .....
	1X692139	Antenna Loop & Front Cover Assembly: complete; black plastic (5J1 & 5J1U).....
	1X692141	Antenna Loop, Panel & Hinge Assembly: less front cover; black plastic(5J1 & 5J1U).....
	24B691936	Antenna Loop & Panel Assembly: less hinges; black plastic (5J1 & 5J1U) .....
L-2	24B691987	Oscillator coil (red code) (HS-224 only) .....
	24K600154	Oscillator coil (white code) (HS-250 only) .....
SPEAKER		
LS-1	50B692037	Speaker: 3½" PM; 3.2 ohm VC.
or	50B692038	Speaker: 3½" PM; 3.2 ohm VC.
RESISTORS		
		Note: All resistors are insulated, carbon type unless otherwise specified.
R-1	6R2122	4.7 meg 20% ½W .....
R-2	6R6031	100,000 10% ½W .....
R-3	6R6397	22,000 10% ½W .....
R-4	6R2109	10 meg 20% ½W .....
R-5	6R5683	27 10% ½W .....
R-6	6R2118	3.3 meg 20% ½W .....
R-7	17K692009	Wire wound: 2150 5% 10W; tapped
R-8	6R5581	3300 10% ½W .....
R-9	18A692018	Volume control: 1 meg; with on-off switch .....
R-10	6R5554	390 10% ½W .....
R-11	6R2109	10 meg 20% ½W .....
R-12	6R6004	1 meg 20% ½W .....
R-13	6R2122	4.7 meg 20% ½W .....
R-14	6R2118	3.3 meg 20% ½W .....
R-15	6R6432	270 10% ½W .....
R-16	6R6040	680 10% ½W .....
R-17	6R6269	820 10% ½W .....
R-18	6R6015	220,000 20% ½W .....
SWITCHES		
S-1	40B471927	Rotary switch, 5PDT (AC/DC, battery selector)(HS-224 only) .....
	40K600156	Rotary switch, 4PDT (AC/DC, battery selector)(HS-250 only).
S-2		On-off switch (on volume control)
TRANSFORMERS		
T-1	24B692014	IF Transformer, 455 Kc: complete with capacitors, less shield...
T-2	24B692015	Diode Transformer, 455 Kc: complete with capacitors, less shield .....
T-3	25K692006	Output Transformer .....

©John F. Rider

Compliments of www.nucow.com

MODELS 5J1, 5L1, Ch. HS-250; 5J1U, 5L1U, Ch. HS-224

PART NUMBER	DESCRIPTION
CHASSIS PARTS - MECHANICAL	
43A692012	Bushing, strain relief: line cord (use with 43K692013) .....
42K75826	Clip, electrolytic mtg .....
42A485548	Clip, IF coil mtg .....
30B691994	Cord, line: with plug; 6 ft long (HS-224 only) .....
30K600125	Cord, line: with plug; 6 ft long (HS-250 only) .....
4S7650	Lockwasher, internal: #6; cad pl.
29R5294	Lug, soldering (holds battery leads)
29R5239	Lug, soldering: #8 hole (holds line cord)(HS-224 only) .....
29R3020	Lug, soldering: battery contact (in 'A' battery retainer).....
2S7005	Nut, hex: 6-32 x 1/4 stl; cad pl (R-7 & selenium rect mtg).....
2S7051	Nut, hex: palnut; 3/8-32 x 9/16; pl (vol control mtg).....
9A691988	Receptacle, 2-pin (ant lead recep)....
15B481896	Retainer, 'A' battery; plastic.....
43K692013	Retainer, strain relief (on line cord bushing)(use with 43A692012).....
5S7771	Rivet: .088 x 3/16 stl; nkl pl (tube socket mtg) .....
5S7706	Rivet: .122 x 1/8 stl; nkl pl (term strip & switch mtg) .....
5S7791	Rivet: .122 x 3/8 stl; nkl pl (ant receptacle mtg) .....
3S490828	Screw, machine: 6-32 x 3/16 plain hex head lockscrew; cad pl (gang mtg)
3S7363	Screw, machine: 6-32 x 1" slotted binder head; cad pl (selenium rect mtg) .....
3S1451	Screw, machine: 6-32 x 2" slotted round head; cad pl (R-7 mtg).....
3S7205	Screw, machine: 8-32 x 1/4 slotted hex head lockscrew; cad pl (spkr mtg) .....
3S2695	Screw, sheet metal: #6 x 3/16 PKZ plain hex head; cad pl (bottom shield mtg) .....
3S7462	Screw, thread-cutting: 6-32 x 3/16 plain hex head; cad pl (S-1 mtg)
26K600155	Shield, back: aluminum (on rear of chassis)(HS-250 only) .....
26C691983	Shield, bottom: black (over chassis bottom)(HS-224 only) .....
26A692005	Shield, heat (around R-7) .....
26K691997	Shield, switch: cad pl (over AC/DC, Batt. switch) .....
9A690129	Socket, tube: miniature; 7-prong .....
41K680029	Spring, battery contact (in 'A' battery retainer) .....
31K691985	Strip, 'B' battery terminal: with leads
31K37504	Strip, terminal: 1 insulated lug; #1 mtg; 3/8" spacing .....
31K470746	Strip, terminal: 3 insulated lugs; #2 mtg; 3/8" spacing .....
4K470939	Washer, fibre (ant receptacle mtg).....
4K470939	Washer, fibre (R-7 mtg) .....
CABINET PARTS (5L1 & 5L1U)	
7B600059	Bracket, chassis support: cad pl (on sides of chassis) .....
38K692051	Button, plug: tan .....
16E691902	Cabinet & Grille Assembly, front section; complete, less carrying handle; tan plastic .....
16K691903	Cabinet, front section: less grille & carrying handle; tan plastic .....
16D691905	Cover, cabinet back: tan plastic; less latch spring .....
5S7855	Eyelet: .156 x .484 (on loop leads)doz
16K691904	Grille, speaker: brown plastic .....
1X600082	Handle Assembly, complete: tan .....
36B691906	Knob, tuning: tan plastic .....
29A690089	Lug, crimping (on cover stop cord).doz
3S8175	Screw, sheet metal: #4 x 3/16 PKZ pl hex head; cad pl (chassis support bracket mtg) .....per/c
3S490390	Screw, thread-cutting: #4 x 3/8; type 25 Phillips round head; cad pl (spkr grille mtg) .....
3S488009	Screw, thread cutting: #6 x 3/8; type 25 plain hex head; cad pl (mounts chassis to cabinet) .....
2S7089	Speednut: for .187 stud; black parkerized finish (loop mtg) .....
41A480094	Spring, hinge (rear cover) .....
55B692068	Spring, rear cover latch .....
4K19943	Washer, paper: 11/16 x 17/64 x 1/32 (loop mtg) .....
CABINET PARTS (5J1 & 5J1U)	
7A600078	Bracket, chassis support: cad pl (on sides of chassis) .....
7A692061	Bracket, hinge mtg: black nickel finish (inside cabinet front) .....
38K692052	Button, plug: black .....
16E691798	Cabinet, front section: less grille, loop & front cover; black plastic....
42K692143	Clip, cabinet locking (on front section of cabinet) .....
42A480078	Clip, cabinet locking (on rear cover) .....
13A691938	Cloth, grille .....
15D691799	Cover, cabinet back: black plastic....
15D691894	Cover, cabinet front: less medallion and loop; black plastic .....
55A692058	Cover, handle mtg: brass plated (over ends of handle) .....
7A691932	Frame, grille: satin brass finish (around top of spkr grille).....
7K691934	Frame, grille: satin brass finish (around bottom of spkr grille).....
13C691896	Grille, speaker: green plastic.....
55A691944	Handle, carrying: black plastic; less spring .....
1X692142	Hinge Assembly, front cover: complete.
36B691923	Knob, control: green plastic.....
1X692137	Lead and Eyelet Assembly: white (loop lead) .....
1X692138	Lead and Eyelet Assembly: green (loop lead) .....
4S7695	Lockwasher, internal: #5; cad pl .....
29A690089	Lug, crimping (on cover stop cord)
29R3037	Lug, soldering: #6 hole (loop lead connector-on loop panel).....
13A691927	Medallion: brass plated (on front cover)
64A692191	Plate, handle mtg: cad pl (under ends of handle) .....
64A600044	Plate, loop panel support (under loop hinges-on loop panel) .....
5S6833	Rivet: .122 x 3/16 stl; blk nkl (mounts hinge to loop panel)...
3S7327	Screw, machine: 5-40 x 3/8 plain hex head; cad pl (handle mtg) ....
3S7155	Screw, machine: 6-32 x 3/16 plain hex head; cad pl (holds hinge to hinge mtg brkt) .....
3S490018	Screw, sheet metal: #2 x 1/4 PKZ Phillips flat head; blk nkl (mounts loop to front cover) .....
3S8136	Screw, sheet metal: #4 x 1/4 PKZ Phillips round head; blk nkl (chassis support brkt mtg).....
3S400036	Screw, thread-cutting: #6 x 1/4 PKF slotted binderhead; cad pl (holds hinge mtg brkt) .....
3S488009	Screw, thread-cutting: #6 x 3/8; type 25 plain hex head; cad pl (mounts chassis to cabinet) .....
2S490840	Speednut: for 1/16 stud; black parkerized finish (medallion mtg)....
2S7092	Speednut: for .125 stud; black parkerized finish (spkr grille mtg)..
2S490842	Speednut: for .271 stud; black parkerized finish (holds cover stop cord) .....
41A692060	Spring, handle (inside plastic handle)
4S1719	Washer, flat; 3/8 x .140 x .030 stl; cad pl (handle mtg) .....
4B600136	Washer, paper: 3/4 x 5/16 x .020 (holds cover stop cord) .....

©John F. Rider

Compliments of www.nucow.com

MODELS 5J1U,
5L1U, Ch. HS-224

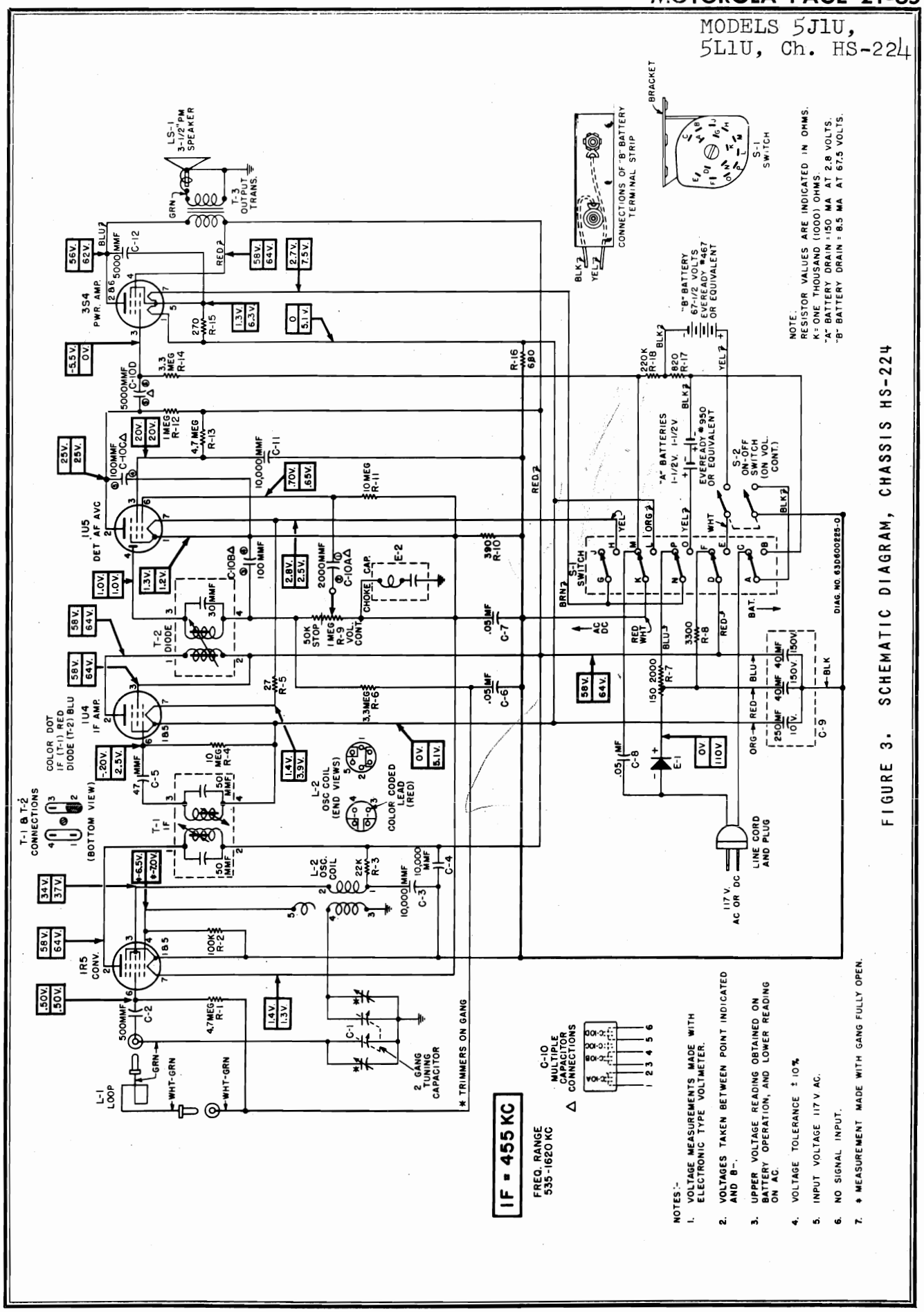

FIGURE 3. SCHEMATIC DIAGRAM, CHASSIS HS-224

©John F. Rider

Compliments of www.nucow.com

MODELS 5J1,
5L1, Ch. HS-250

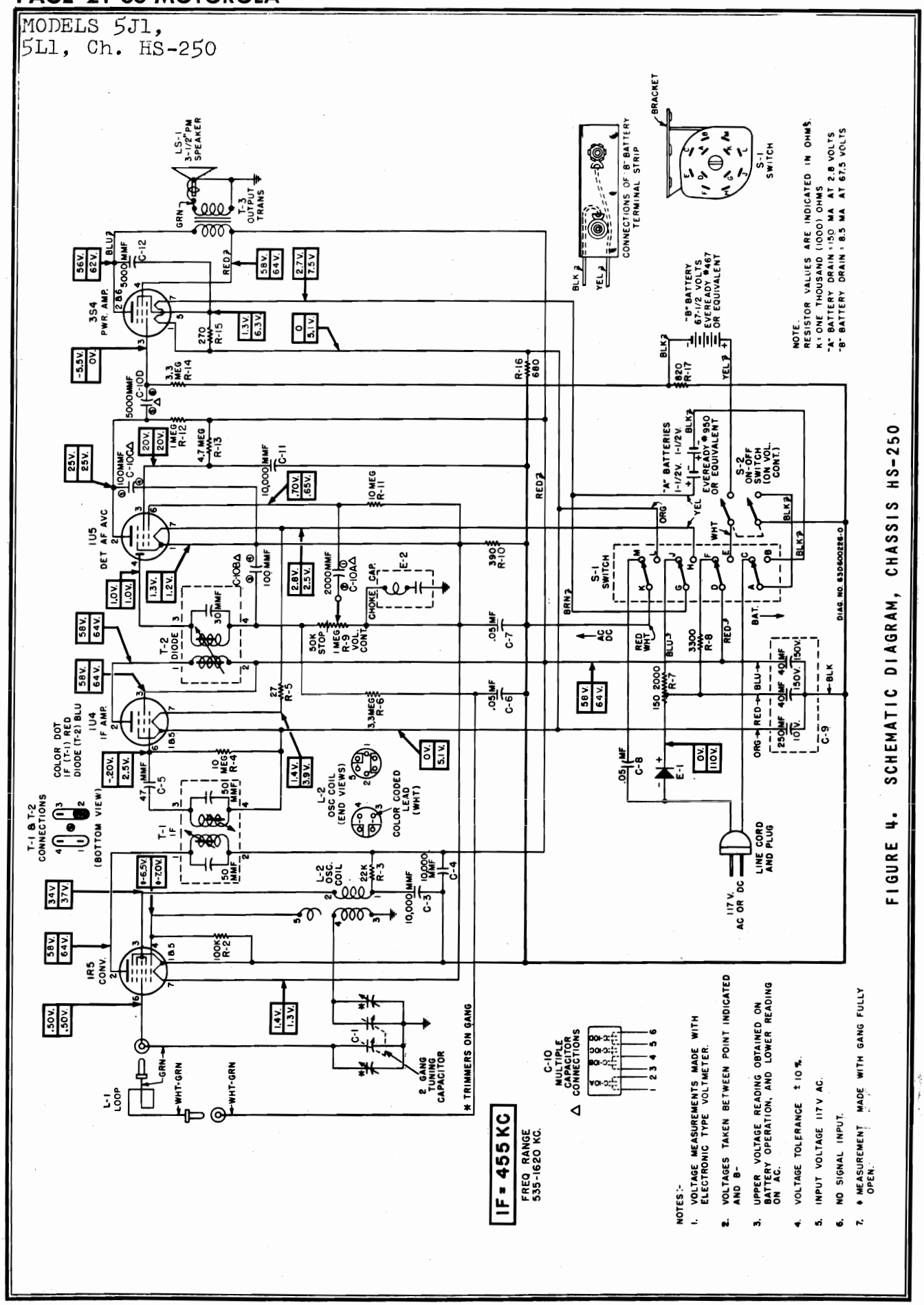

FIGURE 4. SCHEMATIC DIAGRAM, CHASSIS HS-250

©John F. Rider

Compliments of www.nucow.com

MODELS 5M1, 5M2, Ch. HS-249; 5M1U, 5M2U, Ch. HS-223

GENERAL INFORMATION

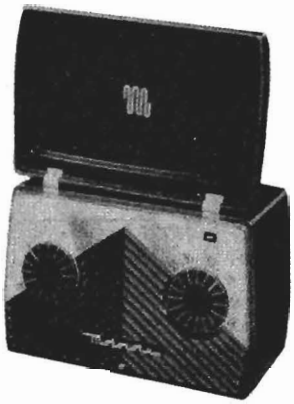

5M1 & 5M2 SERIES

TYPE - Three-power (AC/DC, Battery) portable radio receiver. Four miniature type tubes and a selenium rectifier are used in a superheterodyne circuit.

MODEL	COLOR	CHASSIS
5M1	Green	HS-249
5M1U	Green	HS-223
5M2	Maroon	HS-249
5M2U	Maroon	HS-223

TUNING RANGE - 535 to 1620 Kc IF - 455 Kc

TUBE COMPLEMENT - 1R5 - Converter
1R4 - IF Amplifier
1U5 - Det, AVC & 1st AF Amp
3S4 - Power Amplifier
Rectifier - Selenium type - for AC/DC operation

POWER SUPPLY - Operates from 117V AC/DC (15 watts) or from the following batteries:

2 - 1½V flashlight cells (Eveready #950 or equivalent)

1 - 67½V "B" battery (Eveready #467 or equivalent)

OPERATING INSTRUCTIONS

TO OPEN FRONT COVER. The front cover is opened by pushing upward on the "M" bar located in the center of the cover. The receiver is automatically turned on when the front cover is opened and raised to a vertical position.

TO OPEN BACK COVER. The back cover may be opened by gently pulling it at the top. When closing the cover, be careful not to pinch the power line cord or other leads between the cover and the cabinet.

117 VOLT AC OR DC OPERATION. The power cord is located inside the cabinet and may be reached by opening the back cover. Pass the line cord through the slot on the side of the receiver, and plug it into any 117 volt AC or DC power outlet. If the receiver does not operate from DC power, reverse the plug in the power outlet. When operating from AC power, reception may sometimes be improved by reversing the power plug in the outlet. It is not necessary that batteries be installed if the receiver is to be operated only from house power lines.

BATTERY OPERATION. Open the back cover and install the batteries, following the instructions on the label inside the back cover (or see Figure 1). Insert the line cord plug into the receptacle on the chassis, or the receiver will not play from batteries. If the receiver is to be operated for a long period of time from 117 volts AC or DC, or is to be placed in storage, remove the batteries and store them in a cool place. **IMPORTANT:** Never leave low or run-down batteries in the receiver, as they will leak or swell and damage it.

TUNING CONTROL. Stations are tuned in with the right-hand knob. The markings around the tuning knob may be read in kilocycles by adding one zero to the figures.

VOLUME CONTROL. The left-hand knob controls volume.

TO TURN OFF. Closing the front cover will automatically turn off the receiver.

ANTENNA. A loop antenna is built into the front cover. Because of the slightly directional characteristics of the loop antenna, reception from some stations may be improved by rotating the entire receiver. In extremely noisy locations, rotate the receiver until minimum noise and maximum signal pickup are obtained.

BATTERY REPLACEMENT. If low volume or fuzzy tone is noticed when operating from batteries, replace the flashlight cells. Normally, the 67½V "B" battery will last for 3 or 4 changes of the flashlight cells. The condition of the batteries will not affect the operation of the receiver from 117 volts AC or DC. Complete battery replacement instructions will be found inside the cabinet back cover (or See Figure 1).

SERVICE NOTES

The chassis of this receiver is isolated from the AC power line circuit by a capacitor-choke assembly to eliminate the shock hazard when handling the receiver. However, as an additional precaution when aligning or servicing the receiver from AC, an isolation transformer should be inserted between the power line and the chassis.

The tubes are exposed when the rear cover is opened. It is not necessary to remove the chassis to replace tubes.

To remove the chassis from the cabinet:

1. Pull off the two control knobs on the front of the cabinet.
2. Open the rear cover and remove the batteries.
3. Remove the two Phillips head screws holding the chassis to the cabinet ("A" - "A" in Figure 1).
4. Slide the chassis out of the cabinet.
5. Disconnect the two leads from the chassis to the loop antenna hinges.

©John F. Rider

Compliments of www.nucow.com

MODELS 5M1, 5M2, Ch. HS-249; 5M1U, 5M2U, Ch. HS-223

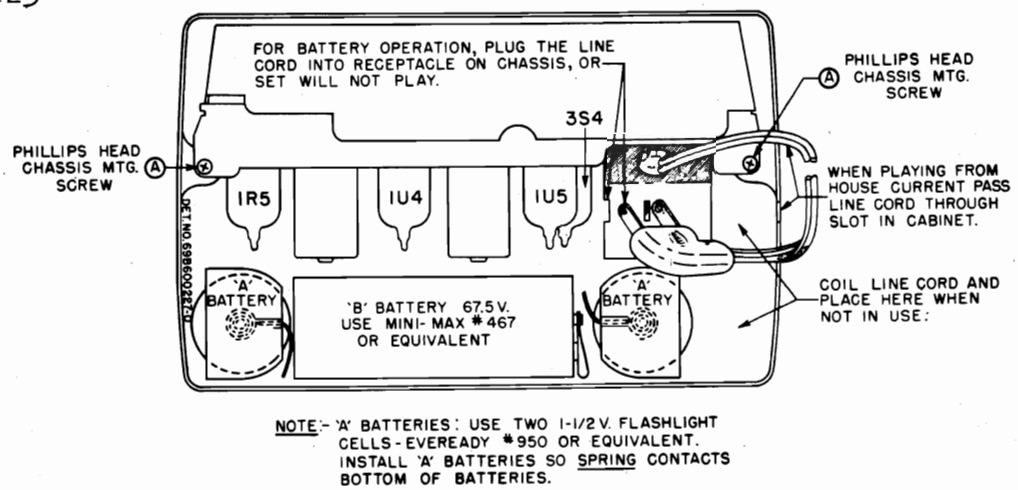

FIGURE 1. BATTERY INSTALLATION & CHASSIS REMOVAL INSTRUCTIONS

ALIGNMENT CHART

STEP	DUMMY ANTENNA	GENERATOR CONNECTION	GENERATOR FREQUENCY	GANG SETTING	ADJUST	REMARKS
IF ALIGNMENT						
1.	.1 mf	Grid of conv (pin 6, 1R5)*	455 Kc	Fully open	1, 2 & 3	Adjust for maximum.
RF ALIGNMENT						
2.	-	Grid of conv (pin 6, 1R5)*	1620 Kc	Fully open	4	Adjust for maximum.
3.	-	-	-	-	-	Install chassis in cabinet, leaving output meter connected to speaker.
4.	-	Radiation loop**	1400 Kc	Tune for maximum	5	Adjust for maximum. Trimmer is reached through hole under plug button on side of cabinet.

* On chassis HS-249 return the grid of the converter tube to AVC either through the loop or through a 4.7 meg resistor (as in chassis HS-223).

**Connect generator output across 5" diameter, 5 turn loop and couple inductively to receiver loop. Keep loops at least 12" apart.

ALIGNMENT

NOTE: The receiver may be operated either from a battery or from the commercial power lines during alignment. If AC power is used, it is recommended that an isolation transformer be placed between the power line and the receiver. If an isolation transformer is not available, connect the low side of the signal generator to B- through a .1 mf capacitor.

1. Connect a low range output meter across the speaker voice coil.
2. Connect the low side of the signal generator to B-.
3. Set the signal generator for 400 cycle, 30% modulation.
4. Turn the receiver volume control to maximum.
5. Use a small fibre screwdriver for aligning the IF and diode transformers.
6. As stages are brought into alignment, reduce the signal generator input to keep the output of the receiver at approximately .05 watt (.05 watt = .40 volts on the output meter) to avoid overloading the receiver.
7. See Figure 2 for adjustment locations and the following chart for procedure.

©John F. Rider

Compliments of www.nucow.com

MODELS 5M1, 5M2, Ch. HS-249; 5M1U, 5M2U, Ch. HS-223

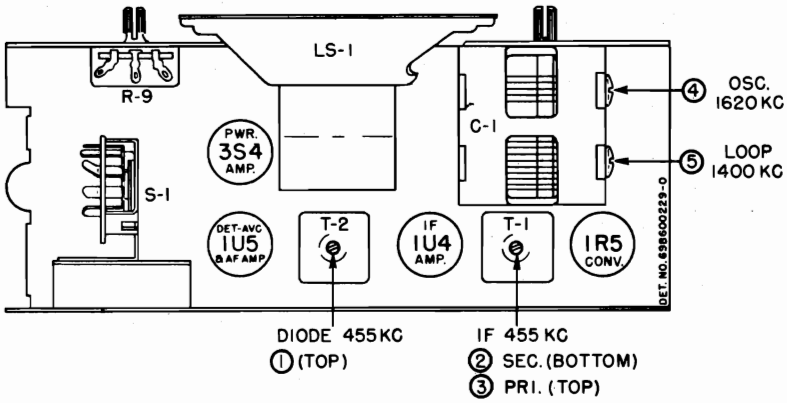

FIGURE 2. TUBE & TRIMMER LOCATIONS

REPLACEMENT PARTS LIST

REF. NO.	PART NO.	DESCRIPTION
CHASSIS PARTS - ELECTRICAL		
CAPACITORS		
C-1	19K692007	Variable, 2-gang .....
C-2	21K481377	Ceramic: 500 mmf 500V .....
C-3	21K482726	Ceramic, disc type: 10,000 mmf 450V .....
C-4	21K482726	Ceramic, disc type: 10,000 mmf
C-5	21K77373	Ceramic: 47 mmf 500V .....
C-6	8K71213	Paper: .05 mf 100V .....
C-7	8K71213	Paper: .05 mf 100V .....
C-8	8K471635	Paper: .05 mf 400V .....
C-9	23B691995	Electrolytic: 40-40 mf 150V/ 250 mf 10V .....
C-10A, B,C,D	21K691992	Ceramic, multiple: 2000 mmf, 100 mmf, 100 mmf, 5000 mmf ....
C-11	21K482726	Ceramic, disc type: 10,000 mmf 450V .....
C-12	21A470789	Ceramic, disc type: 5000 mmf 450V .....
CHOKE & CAPACITOR		
E-2	24K691986	Choke & .05 mf 200V paper capacitor .....
RECTIFIER		
E-1	48B791092	Selenium Rectifier: half-wave...
COILS		
L-1	1X692159	Antenna Loop & Front Cover Assembly: complete; green plastic (5M1 & 5M1U) .....
	1X692160	Antenna Loop, Panel & Hinge Assembly: less front cover; green plastic (5M1 & 5M1U)...
	24B692200	Antenna Loop & Panel Assembly: less hinges; green plastic (5M1 & 5M1U) .....
	1X600129	Antenna Loop & Front Cover Assembly: complete; maroon plastic (5M2 & 5M2U) .....
	1X600130	Antenna Loop, Panel & Hinge Assembly: less front cover; maroon plastic (5M2 & 5M2U)
	24K600132	Antenna Loop & Panel Assembly: less hinges; maroon plastic (5M2 & 5M2U) .....
L-2	24K600097	Oscillator Coil (yellow code)
SPEAKER		
LS-1	50K600142	Speaker: 3½" PM; 3.2 ohm VC.
or	50K600141	Speaker: 3½" PM; 3.2 ohm VC.
RESISTORS		
Note: All resistors are insulated, carbon type unless otherwise specified.		
R-1	6R2122	4.7 meg 20% ½W .....
R-2	6R6031	100,000 10% ½W .....
R-3	6R6397	22,000 10% ½W .....
R-4	6R2109	10 meg 20% ½W .....
R-5	6R5683	27 10% ½W .....
R-6	6R2118	3.3 meg 20% ½W .....
R-7	17K692009	Wire wound: 2150 5% 10W; tapped
R-8	6R5581	3300 10% ½W .....
R-9	18A691993	Volume control: 1 megohm...
R-10	6R5554	390 10% ½W .....
R-11	6R2109	10 meg 20% ½W .....
R-12	6R6004	1 meg 20% ½W .....
R-13	6R2122	4.7 meg 20% ½W .....
R-14	6R2118	3.3 meg 20% ½W .....
R-15	6R6432	270 10% ½W .....
R-16	6R6040	680 10% ½W .....
R-17	6R6269	820 10% ½W .....
R-18	6R6015	220,000 20% ½W .....
SWITCHES		
S-1	40B471927	Rotary switch, 5PDT (AC/DC, battery selector).....
S-2	40A691999	Slide switch (on-off).....
TRANSFORMERS		
T-1	24B692014	IF Transformer, 455 Kc: complete with capacitors, less shield..
T-2	24B692015	Diode Transformer, 455 Kc; complete with capacitors, less shield .....
T-3	25K692006	Output Transformer .....

PART NUMBER	DESCRIPTION
CHASSIS PARTS - MECHANICAL	
43A692011	Bushing, insulator: fibre (on rear edge of chassis) .....
43A692012	Bushing, strain relief: line cord (use with 43K692013) .....
42K75826	Clip, electrolytic mtg .....
42A485548	Clip, IF transformer mtg .....
30B691994	Cord, line: with plug; 6 ft long (HS-223 only) .....
30K600125	Cord, line: with plug; 6 ft long (HS-249 only) .....
4S7650	Lockwasher, internal: #6; cad pl.
29R5294	Lug, soldering (holds battery leads) .....
29R5239	Lug, soldering: #8 hole (holds line cord) (HS-223 only) .....
29R3020	Lug, soldering: battery contact (in 'A' battery retainer) .....
2S7005	Nut, hex: 6-32 x 1/4 stl; cad pl (R-7 & selenium rect mtg) .....
2S7051	Nut, hex: palnut; 3/8-32 x 9/16; cad pl (volume control mtg).....
9A470980	Receptacle, loop (on lead to loop).
15B481896	Retainer, 'A' battery: plastic.....
43K692013	Retainer, strain relief (on line cord bushing) (use with 43A692012).....
5S7771	Rivet: .088 x 3/16 stl; nkl pl (tube socket mtg) .....
5S7706	Rivet: .122 x 1/8 stl; nkl pl (term strip & switch mtg).....
3S490828	Screw, machine: 6-32 x 3/16; plain hex head lockscrew; cad pl (gang mtg)
3S7363	Screw, machine: 6-32 x 1 slotted binderhead; cad pl (selenium rect mtg).....
3S1451	Screw, machine: 6-32 x 2 slotted round head; cad pl (R-7 mtg).....
3S7205	Screw, machine: 8-32 x 1/4 slotted hex head lockscrew; cad pl (spkr mtg).
3S2695	Screw, sheet metal: #6 x 3/16 PKZ pl hex head; cad pl (rear shield mtg) .....
3S7462	Screw, thread-cutting: 6-32 x 3/16 plain hex head; cad pl (S-1 mtg)
26K692003	Shield, back (on rear of chassis).
26A692005	Shield, heat (around R-7) .....
26K691997	Shield, switch (over AC/DC, Batt. sw)
9A690129	Socket, tube: miniature; 7-prong ....
41K680029	Spring, battery contact (in 'A' battery retainer) .....
31K470880	Strip, 'B' battery terminal: with leads
31K37504	Strip, terminal: 1 insulated lug; #1 mtg; 3/8" spacing .....
31K470746	Strip, terminal: 3 insulated lugs; #2 mtg; 3/8" spacing .....
4K470939	Washer, fibre (R-7 mtg) .....
CABINET PARTS	
7A600092	Bracket, escutcheon support: cad pl (cabinet front support)(5M1U & 5M2U)
38K692050	Button, plug: green finish (5M1 & 5M1U) .....
38K600106	Button, plug: maroon finish (5M2 & 5M2U)
1X692156	Cabinet: complete, less handle, grille and front cover; green finish (5M1 & 5M1U) .....
1X600126	Cabinet: complete, less handle, grille and front cover; maroon finish (5M2 & 5M2U) . .....
42A600094	Clip, grille retainer (holds front grille to cabinet) .....
55A692058	Cover, handle mtg: brass plated (over ends of handle) .....
13D691949	Escutcheon, dial & volume (on front of cabinet) .....
55A27113	Foot, cabinet bottom: felt.....
1X692162	Front Cover Assembly: complete, less loop; green plastic (5M1 & 5M1U)....
1X600131	Front Cover Assembly: complete, less loop; maroon plastic (5M2 & 5M2U)...
1X692158	Grille Assembly: complete with escutcheon; green plastic (5M1 & 5M1U) .....
1X600128	Grille Assembly: complete with escutcheon; maroon plastic (5M2 & 5M2U) .....
55K692166	Handle, carrying: green plastic; less spring (5M1 & 5M1U) .....
55K600107	Handle, carrying: maroon plastic; less spring (5M2 & 5M2U) .....
55C692202	Hinge, front cover; complete; left-hand
55K600087	Hinge, front cover: complete; right-hand
55K30198	Hinge, rear cover .....
36B691899	Knob, control: green plastic (5M1 & 5M1U) .....
36K600105	Knob, control: maroon plastic (5M2 & 5M2U).....
1X692163	Latch and Plate Assembly (inside front cover) .....
4S8406	Lockwasher, internal: #2; cad pl.
4S7683	Lockwasher, internal: #4; cad pl.
29R5399	Lug, soldering (under front hinge, for loop connection) .....
13B691901	Medallion (on front cover) .....
28A692198	Pin, loop connector (on front hinge) .....
64A692191	Plate, handle mtg: cad pl (under ends of handle) .....
5S8487	Rivet: .088 x 3/32 stl; blk nkl (rear cover hinges) .....
5S8490	Rivet: .088 x 5/32 stl; blk nkl (front hinge mtg)(5M1 & 5M1U)...
5S2827	Rivet: .088 x 5/32 stl; statuary bronze (front hinge mtg)(5M2 & 5M2U)..
3S490849	Screw, machine: 4-40 x 11/32 Phillips round head; cad pl (mounts front hinges to cabinet).....
3S2995	Screw, machine: 5-40 x 5/16 plain hex head; cad pl (handle mtg).....
3S490018	Screw, sheet metal: #2 x 1/4 PKZ Phillips flat head; blk nkl (mounts loop to front cover)(5M1 & 5M1U).
3S3389	Screw, sheet metal: #2 x 1/4 PKZ Phillips flat head; statuary bronze (mounts loop to front cover) (5M2 & 5M2U) .....
3S490739	Screw, sheet metal: #4 x 1/4 PKZ Phillips binderhead; cad pl (chassis mtg) .....
41A470909	Spring, door latch (inside front cover) .....
41K692167	Spring, handle (inside plastic handle)
41A692069	Spring, rear cover latch .....
42A692189	Strap, door latch retainer (inside front cover) .....
46A692151	Stud, latch retainer (front cover latch, on grille) .....
46K690079	Stud, trimount: blk nkl (on loop panel for operating on-off switch)(5M1 & 5M1U) .....
46K680035	Stud, trimount: statuary bronze (on loop panel, for operating on-off switch)(5M2 & 5M2U) .....
4S1719	Washer, flat: 3/8 x .140 x .030 stl; cad pl (handle mtg) .....

©John F. Rider

Compliments of www.nucow.com

MODELS 5M1, 5M2, Ch. HS-249; 5M1U, 5M2U, Ch. HS-223

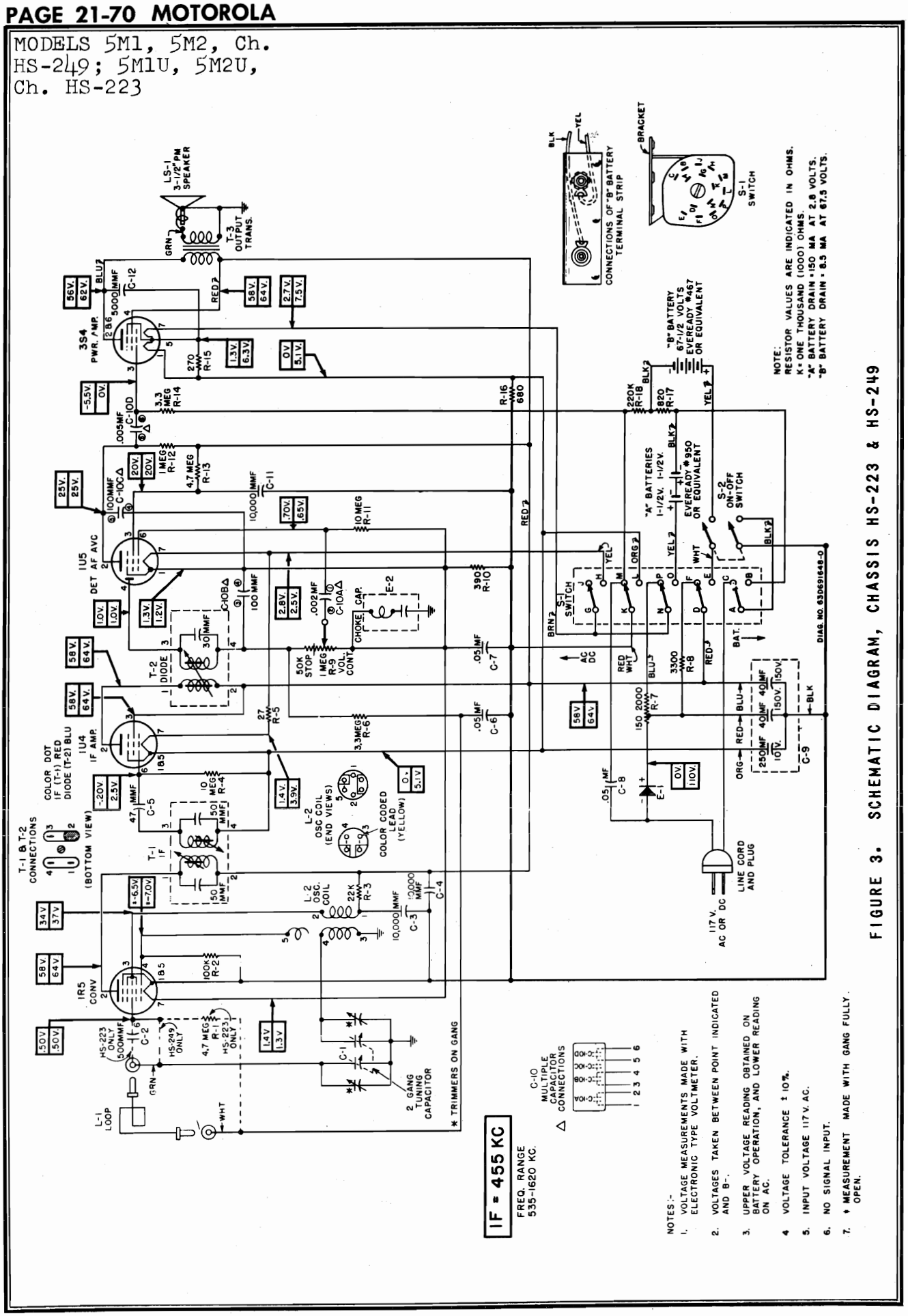

FIGURE 3. SCHEMATIC DIAGRAM, CHASSIS HS-223 & HS-249

©John F. Rider

Compliments of www.nucow.com

MODELS 5R11U, 5R12U, 5R13U, 5R14U, 5R15U, 5R16U, Ch. HS-242

GENERAL INFORMATION

TYPE - AC-DC table model superheterodyne receiver with loop antenna.

RECEIVER MODELS -

Model	Color
5R11U	Walnut-Mahogany
5R12U	Ivory
5R13U	Maroon
5R14U	Gray
5R15U	Green
5R16U	Yellow

TUBE COMPLEMENT -

12BE6	Converter
12BA6	IF Amplifier
12AT6	Det, AVC & AF Amp
50C5	Power Amplifier
35W4	Rectifier

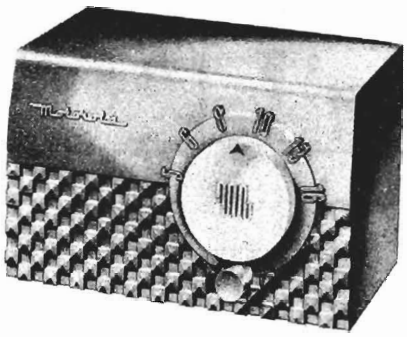

TUNING RANGE - 535 to 1620 Kc IF - 455 Kc

POWER SUPPLY - 117 volts AC or DC; 35 watts

ALIGNMENT

NOTE: It is recommended that an isolation transformer be placed between the power line and the receiver to avoid hum and electrical shocks. If an isolation transformer is not available, connect the low side of the signal generator to B- through a .1 mf capacitor.

1. Connect a low range output meter across the speaker voice coil.
2. Connect the low side of the signal generator to B-.
3. Set the signal generator for 400 cycle, 30% modulation.
4. Turn the receiver volume control to maximum.
5. Use a small fibre screwdriver for aligning the IF and diode transformers.
6. As stages are brought into alignment, reduce the signal generator output to a level which produces less than .40 volts (.05 watt) across the voice coil to avoid overloading the receiver.
7. See Figure 1 for adjustment locations and the following chart for procedure.

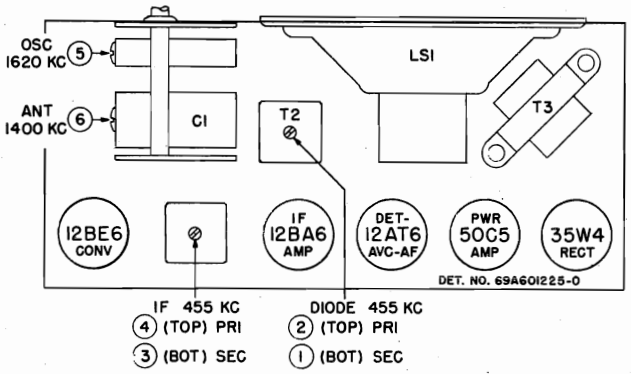

FIGURE 1. TUBE AND TRIMMER LOCATIONS

STEP	DUMMY ANTENNA	GENERATOR CONNECTION	GENERATOR FREQUENCY	GANG SETTING	ADJUST	REMARKS
IF ALIGNMENT						
1.	.1 mf	Grid of conv. (pin 7, 12BE6)	455 Kc	Fully open	1, 2, 3 & 4 (IF cores)	Adjust for maximum.
RF ALIGNMENT						
2.	-	Grid of conv. (pin 7, 12BE6)	1620 Kc	Fully open	5 (Osc)	Adjust for maximum.
3.	-	Radiation loop*	1400 Kc	Tune for max	6 (Ant)	Adjust for maximum

*Connect generator output across 5" diameter, 5 turn loop and couple inductively to receiver loop. Keep loops at least 12" apart.

©John F. Rider

Compliments of www.nucow.com

MODELS 5R11U, 5R12U,
5R13U, 5R14U, 5R15U,
5R16U, Ch. HS-242

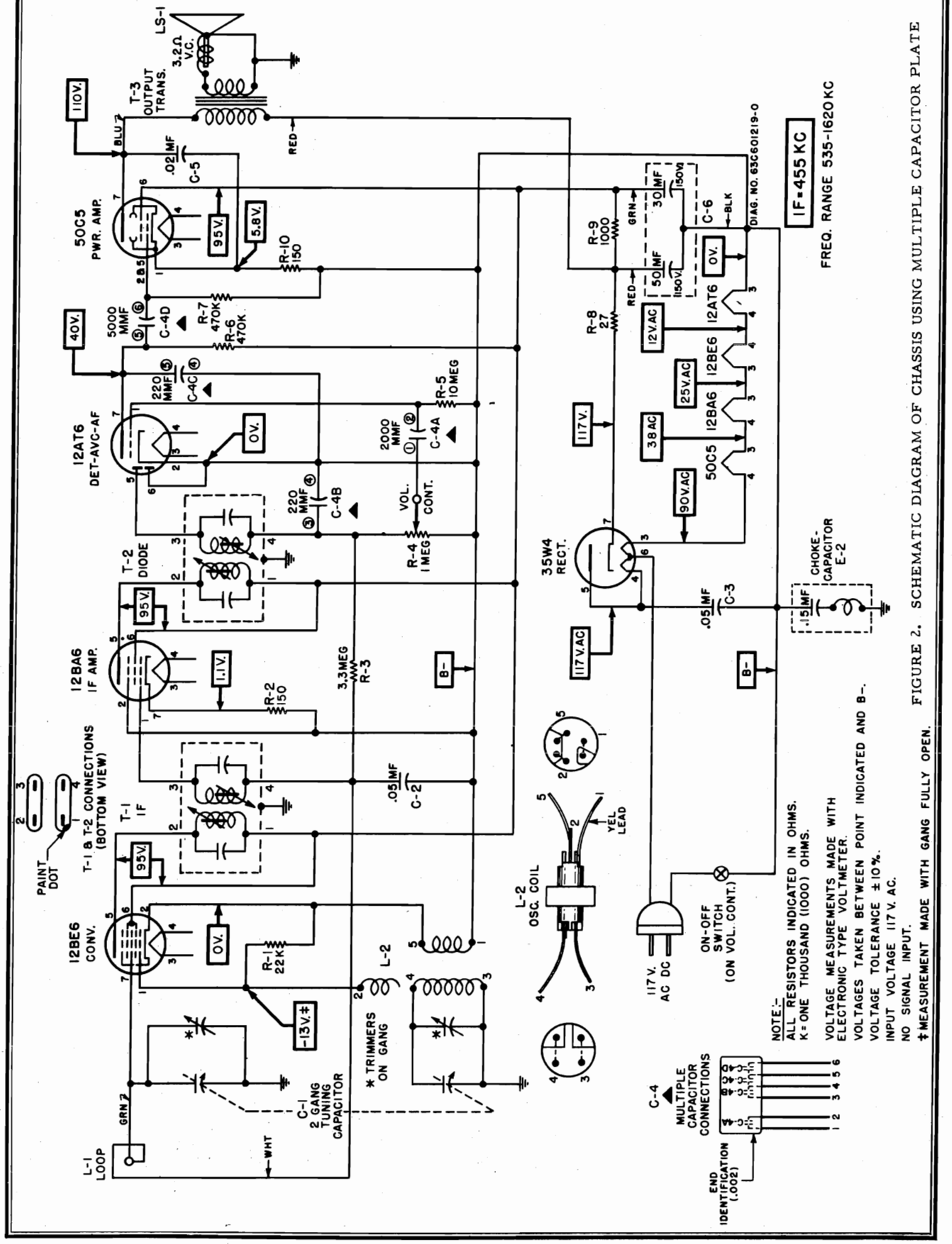

FIGURE 2. SCHEMATIC DIAGRAM OF CHASSIS USING MULTIPLE CAPACITOR PLATE

©John F. Rider

Compliments of www.nucow.com

MODELS 5R11U, 5R12U, 5R13U, 5R14U, 5R15U, 5R16U, Ch. HS-242

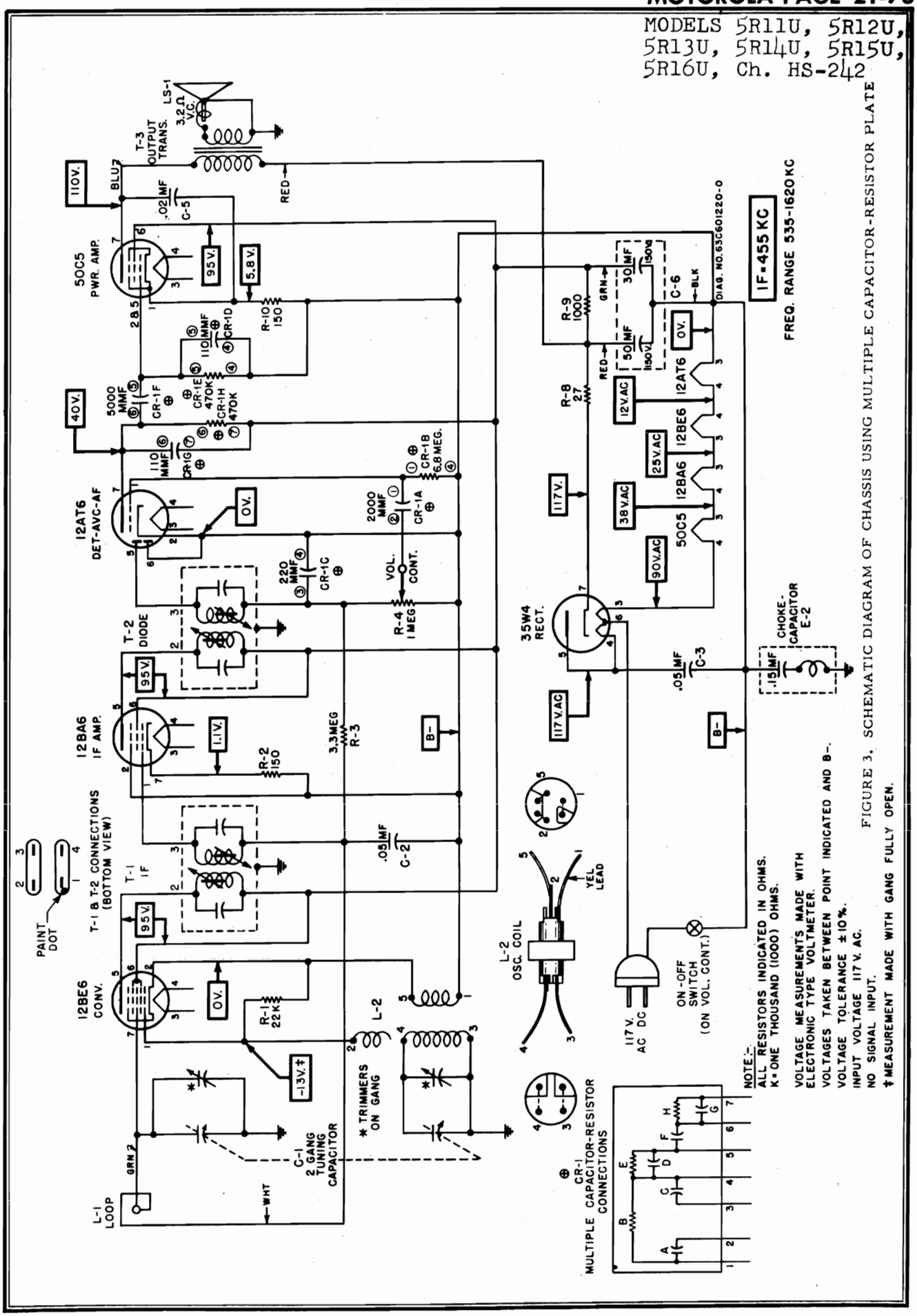

FIGURE 3. SCHEMATIC DIAGRAM OF CHASSIS USING MULTIPLE CAPACITOR-RESISTOR PLATE

©John F. Rider

Compliments of www.nucow.com

MODELS 5R11U, 5R12U, 5R13U, 5R14U, 5R15U, 5R16U, Ch. HS-242

INSTALLATION & OPERATING INSTRUCTIONS

POWER SWITCH & VOLUME CONTROL. Operated with small lower knob. NOTE: Reverse the line plug in the electrical outlet if the radio does not operate from DC. When operating from AC, reversing the line cord plug in wall outlet may sometimes improve reception.

TUNING. Tune in station with large upper knob.

ANTENNA. A built-in loop antenna eliminates the need for an outside antenna in most locations. When receiving a a weak station, rotate the receiver slightly for best signal strength. If additional pick-up is necessary, connect an external antenna to the radio by following the instructions printed on the rear panel. CAUTION: Never connect the radio chassis to a water pipe, radiator, or other ground.

SERVICE NOTES

To remove chassis from cabinet:

1. Pull off the two control knobs from the front of the receiver.
2. Remove the two split plugs which hold the loop to the cabinet.
3. Remove the two hex head screws at the rear edge of the chassis.
4. Slide the chassis from the cabinet.

REPLACEMENT PARTS LIST

NOTE: When ordering parts, specify model number of set in addition to part number and description of part.

Ref. No.	Description
CHASSIS PARTS - ELECTRICAL	
Capacitors	
C-1	19B600458 Variable: 2 gang; with pulley....
C-2	8R9821 Paper: .05 mf 200V.....
C-3	8R9816 Paper: .05 mf 400V.....
C-4	21B482847 Ceramic, multiple: 2000 mmf, 220 mmf, 220 mmf, 5000 mmf.....
C-5	8R9802 Paper: .02 mf 400V.....
C-6	23B600855 Electrolytic: 50-30 mf/150V.....
Capacitor-Resistor	
CR-1	21B601007 Capacitor-Resistor: 7-lead; 2000, 220, 5000, 110, 110mmf, 6.8 meg, 470,000, 470,000 ohms.....
Choke & Capacitor	
E-1	8A690487 Choke & .15 mf paper capacitor...
Coils	
L-1	24C600543 Antenna Loop and Panel Assembly..
L-2	24B680364 Oscillator coil.....
Speaker	
LS-1	50B690661 Speaker: 4" PM; 3.2 ohm VC....
Resistors	
	Note: All resistors are insulated carbon type unless otherwise specified
R-1	6R6028 22,000 20% 1/2W.....
R-2	6R3992 150 20% 1/2W.....
R-3	6R2118 3.3 meg 20% 1/2W.....
R-4	18K600449 Volume control: 1 meg; with switch
R-5	6R2109 10 meg 20% 1/2W.....
R-6	6R6032 470,000 20% 1/2W.....
R-7	6R6032 470,000 20% 1/2W.....
R-8	6R5683 27 10% 1/2W.....
R-9	6R3953 1000 20% 1W.....
R-10	6R3992 150 20% 1/2W.....
Transformers	
T-1,2	24B485553 IF and Diode, 455 Kc: complete with capacitors, cores, and shield..
T-3	25K680345 Output Transformer.....

Part No.	Description
CHASSIS PARTS - MECHANICAL	
7A478118	Bracket, loop mtg.....
43A692012	Bushing, strain relief (line cord)....
42A485548	Clip, coil can mtg (for T-1 & T-2)....
30K680352	Cord, line and plug: 6 feet long.....
5A484268	Grommet, rubber (speaker mtg).....
14A478119	Insulator, fibre (loop bracket mtg)..
2S7051	Nut, hex: 3/8-32 x 9/16; stl; cad pl (volume control mtg).....
5S7771	Rivet: .088 x 3/16; stl; nkl pl (tube socket mtg).....
5S7707	Rivet: .122 x 5/32; stl; nkl pl (output trans and shield mtg).....
5S7703	Rivet: .122 x 7/32; stl; nkl pl (loop bracket and speaker mtg).....
3S7247	Screw, machine: 6-32 x 3/16 slotted hex head; locking type; stl; cad pl (gang mtg).....
26A478117	Shield, electrostatic (on rear of chassis).....
9A472534	Socket, tube: 7 prong.....
41A73996	Spring, tension (electrolytic mtg)....
46A478145	Stud, tri-mount (back mtg to chassis).
14A11493	Washer, shoulder: fibre (loop bracket mtg).....
CABINET PARTS	
16K600181	Cabinet, table model: molded; walnut-mahogany finish (5R11U).....
16E600157	Cabinet, table model: molded; ivory finish (5R12U).....
16K600183	Cabinet, table model: molded, maroon finish (5R13U).....
16K600184	Cabinet, table model: molded; gray finish (5R14U).....
16K600185	Cabinet, table model: molded; green finish (5R15U).....
16K600186	Cabinet, table model: molded; yellow finish (5R16U).....
36B600485	Knob, tuning: ivory (5R11U, 5R13U, 5R14U, and 5R15U).....
36K600486	Knob, tuning: red (5R12U).....
36K600487	Knob, tuning: blue (5R16U).....
36B600544	Knob, volume control: walnut (5R11U)...
36K600545	Knob, volume control: ivory (5R12U)....
36K600546	Knob, volume control: maroon (5R13U)...
36K600547	Knob, volume control: gray (5R14U)....
36K600548	Knob, volume control: green (5R15U)..
36K600549	Knob, volume control: yellow (5R16U)..
3S476083	Screw, machine: 6-32 x 5/16; slotted hex head; stl; cad pl; locking type (chassis mtg).....
38A25507	Plug, split (back mtg to cabinet).....
11M488253	Tape; aluminum foil: 2 1/2" wide

©John F. Rider

Compliments of www.nucow.com

MODELS 5X11U, 5X12U, 5X13U, Ch. HS-243

GENERAL INFORMATION

TYPE - AC-DC table model superheterodyne receiver with loop antenna.

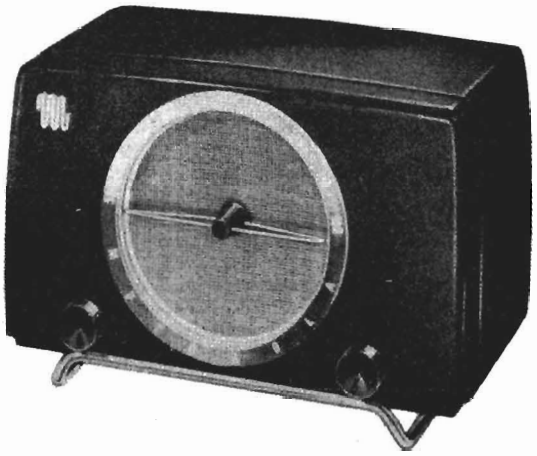

RECEIVER MODELS -

Model	Color
5X11U	Walnut-mahogany
5X12U	Ivory
5X13U	Ebony

TUNING RANGE - 535 to 1620 Kc IF - 455 Kc

TUBE COMPLEMENT - 12BE6 - Converter
12BA6 - IF Amplifier
12AT6 - Det, AVC & 1st AF Amp
50C5 - Power Amplifier
35W4 - Rectifier

POWER SUPPLY - 117 volts AC or DC, 35 watts

INSTALLATION & OPERATING INSTRUCTIONS

POWER SWITCH AND VOLUME CONTROL. Operated with the left-hand knob. NOTE: Reverse the line cord plug in the wall outlet if radio does not operate from DC. When operating from AC, reversing the line cord plug in the wall outlet may sometimes improve reception.

TUNING. Tune stations with the right-hand knob.

ANTENNA. A built-in loop antenna eliminates the need for an outside antenna in most locations. When receiving a weak station, rotate the receiver slightly for best signal strength. If additional pick-up is necessary, connect an external antenna to the radio by following the instructions printed on the rear panel. CAUTION: Never connect the radio chassis to a water pipe, radiator, or other ground.

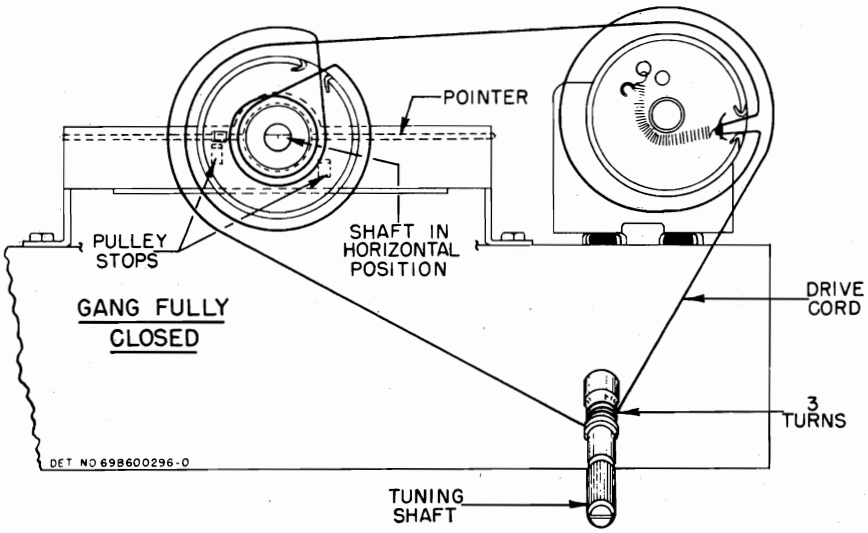

FIGURE 1. STRING DRIVE DETAIL

©John F. Rider

Compliments of www.nucow.com

MODELS 5X11U, 5X12U,
5X13U, Ch. HS-243

SERVICE NOTES

The chassis of this receiver is isolated from the AC power line circuit by a capacitor to eliminate the shock hazard when handling the receiver. However, as an additional precaution when aligning or servicing the receiver from AC, an isolation transformer should be inserted between the power line and the chassis.

To remove the chassis from the cabinet:

1. Pull off the two radio control knobs.
2. Pull off the pointer.
3. Remove the split plugs which hold the loop to the cabinet.
4. From the back of the cabinet, remove the two hex head screws at the rear edge of the radio chassis.
5. Slide the radio chassis and loop from the cabinet.

ALIGNMENT

NOTE: It is recommended that an isolation transformer be placed between the power line and the receiver to avoid hum and electrical shocks. If an isolation transformer is not available, connect the low side of the signal generator to B- through a .1 mf capacitor.

1. Connect a low range output meter across the speaker voice coil.
2. Connect the low side of the signal generator to B-.
3. Set the signal generator for 400 cycle, 30% modulation.
4. Turn the receiver volume control to maximum.
5. Use a small fibre screwdriver for aligning the IF and diode transformers.
6. As stages are brought into alignment, reduce the signal generator output to a level which produces less than .40 volts (.05 watt) across the voice coil to avoid overloading the receiver.
7. See Figure 2 for adjustment locations and the following chart for procedure.

ALIGNMENT CHART

STEP	DUMMY ANTENNA	GENERATOR CONNECTION	GENERATOR FREQUENCY	GANG SETTING	ADJUST	REMARKS
IF ALIGNMENT						
1.	.1 mf	Grid of conv. (pin 7, 12BE6)	455 Kc	Fully open	1, 2, 3 & 4 (IF cores)	Adjust for maximum.
RF ALIGNMENT						
2.	-	Grid of conv. (pin 7, 12BE6)	1620 Kc	Fully open	5 (Osc)	Adjust for maximum.
3.	-	Radiation loop*	1400 Kc	Tune for max	6 (Ant)	Adjust for maximum.

*Connect generator output across 5" diameter, 5 turn loop and couple inductively to receiver loop. Keep loops at least 12" apart.

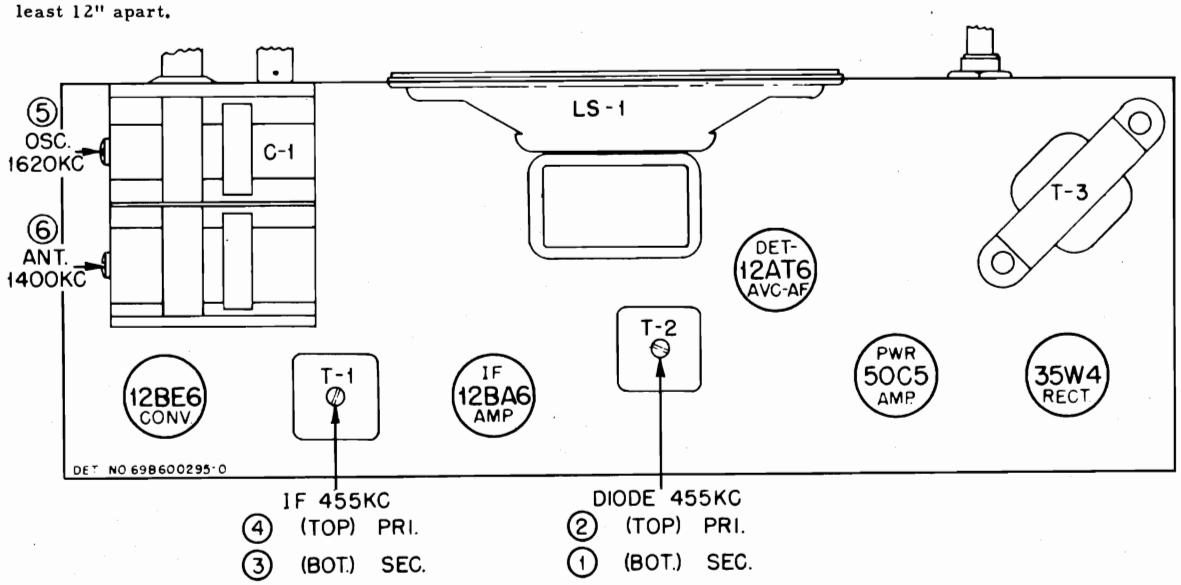

FIGURE 2. TUBE & TRIMMER LOCATIONS

©John F. Rider

Compliments of www.nucow.com

MODELS 5X11U, 5X12U,
5X13U, Ch. HS-243

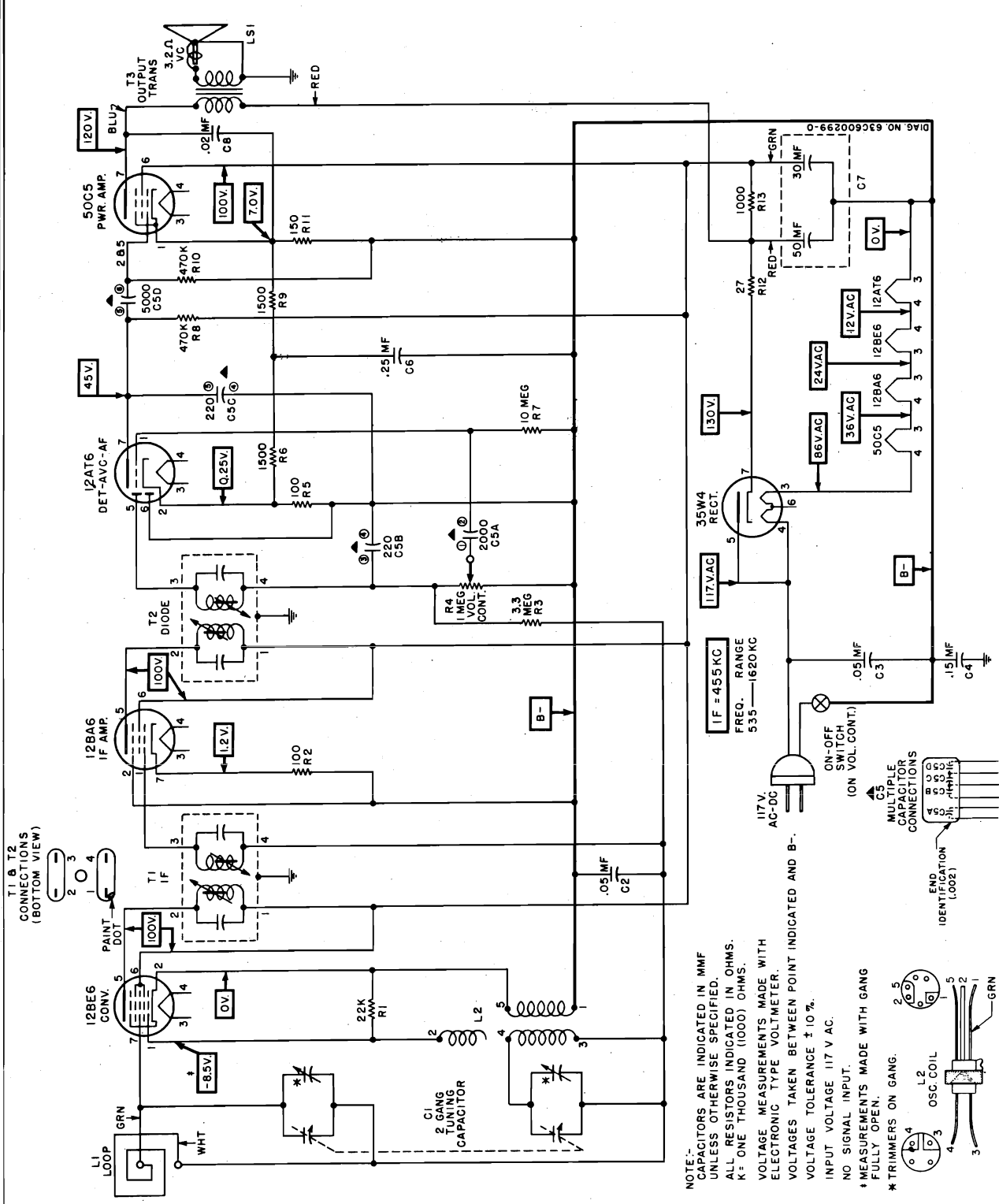

FIGURE 3. SCHEMATIC DIAGRAM OF CHASSIS USING MULTIPLE CERAMIC CAPACITOR

©John F. Rider

Compliments of www.nucow.com

MODELS 5X11U, 5X12U,
5X13U, Ch. HS-243

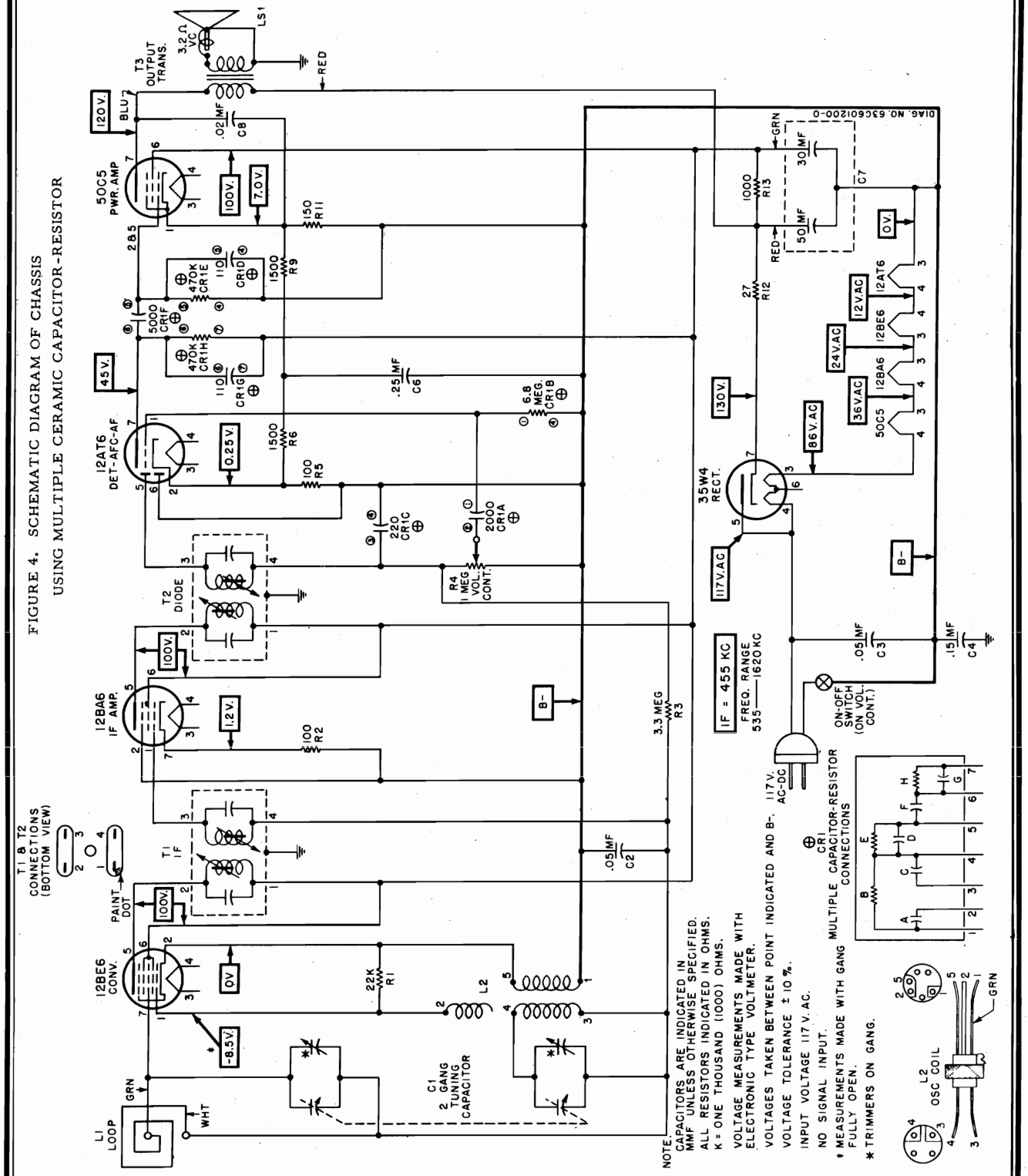

FIGURE 4. SCHEMATIC DIAGRAM OF CHASSIS USING MULTIPLE CERAMIC CAPACITOR-RESISTOR

©John F. Rider

Compliments of www.nucow.com

MODELS 5X11U, 5X12U, 5X13U, Ch. HS-243

REPLACEMENT PARTS LIST

NOTE: When ordering parts specify model number of set in addition to part number and description of part.

Ref. No.	Part Number	Description
CHASSIS PARTS - ELECTRICAL		
Capacitors		
C-1	19B600483	Variable, 2 gang: with pulley .....
C-2	8R9821	Paper: .05 mf 200V .....
C-3	8R9816	Paper: .05 mf 400V .....
C-4	8R9843	Paper: .15 mf 200V .....
C-5	21B482847	Ceramic, multiple: 2000,220,220, 5000 mmf .....
C-6	8A470504	Paper: .25 mf 50V .....
C-7	23B600855	Electrolytic: 50-30 mf/150V .....
C-8	8R9802	Paper: .02 mf 400V .....
Capacitor-Resistor		
CR-1	21B601007	2000,110,110,5000 mmf; 6.8 meg, 470,000, 470,000 ohms .....
Coils		
L-1	24C600517	Loop Antenna Assembly: includes back panel .....
L-2	24K600812	BC Oscillator .....
Speaker		
LS-1	50C691401	Speaker, PM: 4"; 3.2 ohm VC ...
Resistors		
		Note: All resistors are insulated carbon type unless otherwise specified.
R-1	6R6028	22,000 20% 1/2W .....
R-2	6R6018	100 20% 1/2W .....
R-3	6R2118	3.3 meg 20% 1/2W .....
R-4	18K600474	Volume control: 1 meg; includes on-off switch .....
R-5	6R6326	100 10% 1/2W .....
R-6	6R6038	1500 10% 1/2W .....
R-7	6R2109	10 meg 20% 1/2W .....
R-8	6R6032	470,000 20% 1/2W .....
R-9	6R6038	1500 10% 1/2W .....
R-10	6R6032	470,000 20% 1/2W .....
R-11	6R3992	150 20% 1/2W .....
R-12	6R5683	27 10% 1/2W .....
R-13	6R3953	1000 20% 1W .....
Transformers		
T-1,2	24B485553	IF and Diode, 455 Kc: complete including padding capacitors and tuning cores .....
T-3	25K485973	Output .....

Part Number	Description
CHASSIS PARTS - MECHANICAL	
7K485971	Bracket, loop back mtg .....
7A600476	Bracket, tuning shaft mtg .....
1X600589	Bracket and Bushing Assembly, pointer.
42A485548	Clip, coil can mtg .....
11M8944	Cord, dial: 18 lb black .....
30A470651	Cord, line and plug: 6 ft lg .....
5A19658	Eyelet, spacer (gang mtg) .....
5A70404	Grommet, rubber (gang mtg) .....
14A482844	Insulator, cord outlet .....
29R3010	Lug, soldering .....
2S7051	Nut, hex: Palnut (volume control mtg)
1X600590	Pulley and Bushing Assembly, pointer drive .....
5S7771	Rivet: .088 x 3/16 stl; nkl pl (tube socket mtg) .....
5S7707	Rivet: .122 x 5/32 stl; nkl pl (tube shield mtg, output transformer mtg and tuning shaft bracket mtg).....
3S2294	Screw, machine: 6-32 x 1/2; lockscrew; plain hex head; stl; cad pl (gang mtg) .....
3S7477	Screw, machine: 8-32 x 1/4; type #1; plain hex head; stl; cad pl (back mtg) .....
3S2695	Screw, sheet metal: #6 x 3/16 PKZ plain hex head; stl; cad pl (pointer bracket mtg) .....
3S3398	Screw, sheet metal: #6 x 3/8 PKZ plain hex head; stl; cad pl (loop bracket mtg) .....
3S7454	Screw, sheet metal: #8 x 1/4 PKZ plain hex head; stl; cad pl (spkr mtg) ..
3S7148	Setscrew: 6-32 x 1/8; Allen head; stl; cad pl (pointer drive pulley retainer)
47K600506	Shaft, pointer: brass .....
1K600484	Shaft and Pulley Assembly, tuning ....
26A481521	Shield, spring (for 12BA6 tube) .....
9A472534	Socket, tube: 7-prong .....
9K580218	Socket, tube: 8-prong .....
41A73996	Spring, tension (electrolytic mtg) ...
41A14244	Spring, tension (drive cord) .....
4K692188	Washer, "C" (tuning shaft retainer and pointer shaft retainer) .....
4S7633	Washer, flat: 9/16 x 11/64 x .033 thick; stl; cad pl (loop back mtg) .....
4K482859	Washer, insulated shoulder .....
CABINET PARTS	
16E600187	Cabinet, table model: walnut-mahogany finish (5X11U) .....
16K600191	Cabinet, table model: ivory finish (5X12U)
16K600189	Cabinet, table model: ebony finish(5X13U)
13C600416	Bezel, dial (5X11U) .....
13K600417	Bezel, dial (5X12U) .....
13K600418	Bezel, dial (5X13U) .....
13B600573	Grille, cabinet (5X11U and 5X12U) ....
13K600575	Grille, cabinet (5X13U) .....
36B600570	Knob, pointer: walnut(5X11U) .....
36K600571	Knob, pointer: ivory (5X12U) .....
36K600572	Knob, pointer: black (5X13U) .....
36B600455	Knob, tuning: walnut (5X11U) .....
36K600456	Knob, tuning: ivory (5X12U) .....
36K600457	Knob, tuning: black (5X13U) .....
38A25507	Plug, split (back mtg) .....
52A600451	Pointer, dial: brass (5X11U and 5X12U)
52K600453	Pointer, dial: steel (5X13U) .....
3S3371	Screw, sheet metal: #8 x 3/8 PKF plain hex head; stl; cad pl (chassis mtg)
7C600814	Support, cabinet: brass (5X11U, 5X12U)
7K600816	Support, cabinet: aluminum (5X13U)....

©John F. Rider

Compliments of www.nucow.com

MODELS 5X21U, 5X22U,
5X23U, Ch. HS-259

GENERAL INFORMATION

TYPE - A combination standard broadcast and shortwave table model receiver.

RECEIVER MODELS

Model	Color
5X21U	Walnut-Mahogany
5X22U	Ivory
5X23U	Ebony

TUBE COMPLEMENT -

12BE6 - Converter
12BA6 - IF Amplifier
12AT6 - Detector, AVC & 1st Audio Amp
50C5 - Power Amplifier
35W4 - Rectifier

POWER SUPPLY - 117V AC/DC 35 watts

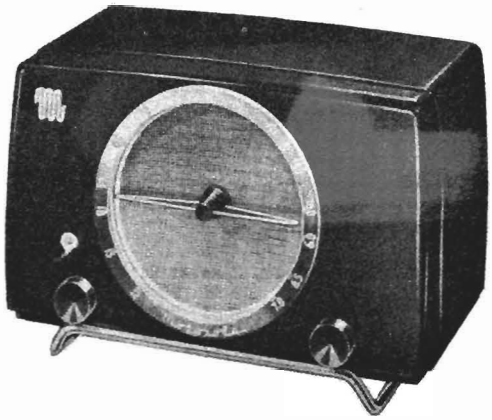

TUNING RANGE - Standard Broadcast - 535 to 1620 Kc
Shortwave - 5.85 Mc to 18.1 Mc

IF - 455 Kc

INSTALLATION & OPERATING INSTRUCTIONS

ANTENNAS

For shortwave reception, it is necessary to connect a length of wire (at least 10 feet long) to the screw terminal located on the radio rear panel. A commercial shortwave antenna is recommended for best results.

No outside antenna is normally required for standard broadcast station reception. A loop antenna for receiving broadcast stations is built into the radio. If the radio is located at a considerable distance from broadcast stations, it may be necessary to secure additional signal pick-up by using an external antenna. The shortwave antenna wire may by used for additional pick-up of standard broadcast stations; leave the wire connected to the shortwave terminal screw and wind two turns of the wire in the slots located at the top of the radio rear panel.

CAUTION: Do not connect antenna or chassis to water pipe, radiator or other ground.

CONTROLS

POWER SWITCH & VOLUME CONTROL. The power switch and volume control are combined and operated with the left-hand knob. If the radio does not operate from a DC power line after being turned on for a few minutes, reverse the power cord plug in the power outlet. When operating from AC power lines, reception can sometimes be improved by reversing the power cord in the power outlet.

BANDSWITCH. The small (inner) right-hand knob selects standard broadcast or shortwave reception, as desired. Rotate this knob to the left for standard broadcast or to the right for shortwave reception.

TUNING. The large (outer) right-hand knob is used for tuning both standard broadcast and shortwave stations.

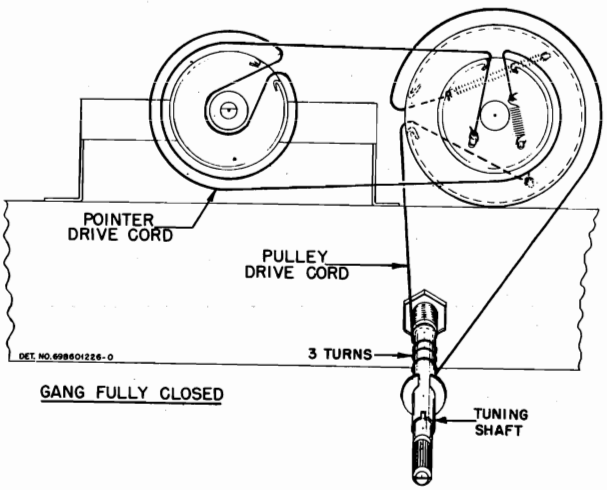

FIGURE 1. STRING DRIVE DETAIL

SERVICE NOTES

TO REMOVE CHASSIS FROM CABINET:

1. Remove the control knobs, pointer knob and pointer; these parts pull off.

2. Remove the two split plugs which hold the top of the loop panel to the cabinet.

3. Remove the two chassis mounting screws, accessible through the slots in the loop panel and slide the chassis from the cabinet.

©John F. Rider

Compliments of www.nucow.com

MODELS 5X21U, 5X22U, 5X23U, Ch. HS-259

ALIGNMENT

NOTE: It is recommended that an isolation transformer be placed between the power line and the receiver to avoid hum and electrical shocks. If an isolation transformer is not available, connect the low side of the signal generator to B- through a .1 mf capacitor.

1. Connect a low range output meter across the speaker voice coil.
2. Connect the low side of the signal generator to B-.
3. Set the signal generator for 400 cycle, 30% modulation.
4. Turn the receiver volume control to maximum.
5. Use a small fibre screwdriver for aligning the IF and diode transformers.
6. As stages are brought into alignment, reduce the signal generator output to a level which produces less than .40 volts (.05 watt) across the voice coil to avoid overloading the receiver.
7. See Figure 2 for adjustment locations and the following chart for procedure.

ALIGNMENT CHART

STEP	DUMMY ANTENNA	GENERATOR CONNECTION	GENERATOR FREQUENCY	BAND SWITCH	GANG SET TO	ADJUST	REMARKS
IF ALIGNMENT							
1.	.1 mf	Rear stator of tuning capacitor	455 Kc	-	Gang opened	1, 2, 3 & 4	Adjust for maximum.
SW BAND RF ALIGNMENT							
2.	400 ohms	SW Ant terminal	18.1 mc	SW	Fully opened	5 & 6	Adjust for maximum.
BC BAND RF ALIGNMENT							
3.	.1 mf	Rear stator of tuning capacitor	1620 Kc	BC	Fully opened	7	Adjust for maximum.
4.	None	Radiation loop*	1400 Kc	BC	Tune for maximum	8	Adjust for maximum.

* Connect generator output to 5" diameter, 3 turn loop and couple to receiver loop. Keep loops at least 12" apart.

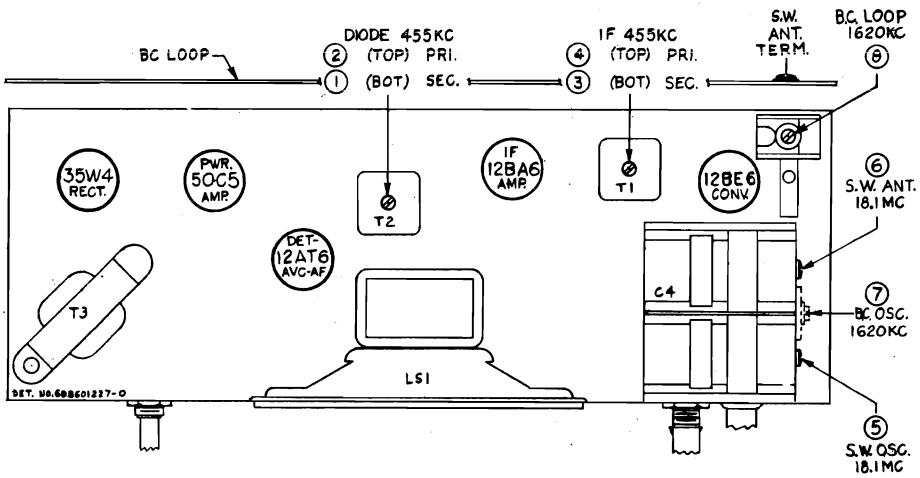

FIGURE 2. TUBE & TRIMMER LOCATIONS

REPLACEMENT PARTS LIST

NOTE: When ordering parts, specify model number of set in addition to part number and description of part.

Ref. No.	Part No.	Description
		Capacitors
C-1	21K77373	Ceramic: 47 mmf 500V .....
C-2	21K891154	Mica: 613 mmf 3% 500V .....

CHASSIS PARTS - ELECTRICAL

©John F. Rider

Compliments of www.nucow.com

MODELS 5X21U, 5X22U, 5X23U, Ch. HS-259

C-3	20A600917	Mica, variable: 3 to 20 mmf; includes bracket
C-4	19B600922	Variable, 2 gang: includes pulley
C-5	21K77373	Ceramic: 47 mmf 500V
C-6	20A680362	Mica, variable: 10 to 50 mmf
C-7	8R9807	Paper: .1 mf 400V
C-8	8R9821	Paper: .05 mf 200V
C-9	8R9816	Paper: .05 mf 400V
C-10	8R9843	Paper: .15 mf 200V
C-11	21B482847	Ceramic, multiple: .002 mf, 220 mmf, 220 mmf & .005 mf 400V
C-12	8A470504	Paper: .25 mf 50V
C-13	8R9802	Paper: .02 mf 400V
C-14	23K600927	Electrolytic: 40-20-20 mf/150V

Capacitor-Resistor

CR-1	21B601007	Capacitor-Resistor: 2000 mmf, 220 mmf, 5000 mmf, 110 mmf, 110 mmf, 6.8 meg, 470,000 ohms & 470,000 ohms

Coils

L-1	24K600687	Loop Antenna Assembly: includes back panel
L-2	24B600925	Coil, shortwave antenna
L-3	24B600924	Coil, shortwave oscillator
L-4	24A600926	Coil, BC oscillator

Speaker

LS-1	50C691401	Speaker, PM: 4"; 3.2 ohm VC

Resistors

Note: All resistors are insulated carbon type unless otherwise specified.

R-1	6R6075	100,000 20% 1/2W
R-2	6R2108	47 20% 1/2W
R-3	6R6028	22,000 20% 1/2W
R-4	6R6018	100 20% 1/2W
R-5	6R2118	3.3 meg 20% 1/2W
R-6	18K600474	Volume control: 1 meg; includes on-off switch
R-7	6R6326	100 10% 1/2W
R-8	6R6038	1500 10% 1/2W
R-9	6R2109	10 meg 20% 1/2W
R-10	6R6032	470,000 20% 1/2W
R-11	6R5683	27 10% 1/2W
R-12	6R6032	470,000 20% 1/2W
R-13	6R6038	1500 10% 1/2W
R-14	6R3992	150 20% 1/2W
R-15	6R3953	1000 20% 1W
R-16	6R6290	2200 20% 1/2W

Switch

S-1	40K600919	Switch, band: 2-position

Transformers

T-1,2	24B485553	IF and Diode: complete with tuning cores, padding capacitors and shield
T-3	25K485973	Output Transformer

CHASSIS PARTS - MECHANICAL

7K485971	Bracket, loop mtg
1X600589	Bracket and Bushing Assembly, pointer shaft
42A485548	Clip, coil can mtg (for T-1 & T-2)
11M8944	Cord, dial: 18# black
30A470651	Cord, line and plug; 6 ft long
5A19658	Eyelet, spacer (gang mtg)
5A70404	Grommet, rubber (gang mtg)

Part Number	Description
14A482844	Insulator, cord outlet
29R3010	Lug, soldering
2S7051	Nut, hex: Palnut; 3/8-32 x 9/16; stl; cad pl (volume control and bandswitch mtg)
1X600590	Pulley and Bushing Assembly, pointer drive
5S7771	Rivet: .088 x 3/16; stl; nkl pl (tube socket mtg)
5S7706	Rivet: .122 x 1/8; stl; nkl pl (variable capacitor mtg)
5S7707	Rivet: .122 x 5/32; stl; nkl pl (spring tube shield, output transformer and variable capacitor & bracket assembly mtg)
3S2294	Screw, machine: 6-32 x 1/2 plain hex head; locking type; stl; cad pl (gang mtg)
3S7477	Screw, machine: 8-32 x 1/4 plain hex head; stl; cad pl (loop back mtg)
3S2695	Screw, sheet metal: #6 x 3/16 PKZ plain hex head; stl; cad pl (coils and pointer bracket mtg)
3S7454	Screw, sheet metal: #8 x 1/4 PKZ plain hex head; stl; cad pl (speaker mtg)
3S3398	Screw, sheet metal: #6 x 3/8 PKZ plain hex head; stl; cad pl (loop bracket & insulator mtg)
3S7148	Setscrew: 6-32 x 1/8; Allen head; stl; cad pl (pointer pulley assembly retainer)
47K600506	Shaft, pointer: brass
47K600928	Shaft, tuning
26A481521	Shield, spring (for 12AT6 tube)
9A472534	Socket, tube: 7-prong
9K580218	Socket, tube: 8-prong
41A73996	Spring, tension (electrolytic mtg)
41A14111	Spring, tension (dial cord -long)
41A21332	Spring, tension (dial cord -short)
4K692188	Washer, "C" (pointer shaft retainer)
4A73639	Washer, "C" (tuning shaft retainer)
4S7633	Washer, flat: 9/16 x 11/64 x .033 thick; stl; cad pl (loop back mtg)
4K482859	Washer, insulated shoulder (loop bracket & insulator mtg)

CABINET PARTS

13C600935	Bezel, dial (5X21U)
13K600936	Bezel, dial (5X22U)
13K600937	Bezel, dial (5X23U)
16E600187	Cabinet, table model: molded; walnut-mahogany finish (5X21U)
16K600191	Cabinet, table model: molded; ivory finish (5X22U)
16K600189	Cabinet, table model: molded; ebony finish (5X23U)
13B600573	Grille, cabinet (5X21U and 5X22U)
13K600575	Grille, cabinet (5X23U)
36K482767	Knob, band control (5X21U)
36K482788	Knob, band control (5X22U)
36K600939	Knob, band control (5X23U)
36K600570	Knob, pointer retainer (5X21U)
36K600571	Knob, pointer retainer (5X22U)
36K600572	Knob, pointer retainer (5X23U)
36K690668	Knob, tuning control (5X21U)
36K690669	Knob, tuning control (5X22U)
36K600943	Knob, tuning control (5X23U)
36B690664	Knob, volume and on-off control (5X21U)
36K690665	Knob, volume and on-off control (5X22U)
36K600945	Knob, volume and on-off control (5X23U)
38A25507	Plug, split (loop back mtg to cabinet)
52A600451	Pointer, dial (5X21U and 5X22U)
52K600453	Pointer, dial (5X23U)
3S3371	Screw, machine: 8-32 x 3/8 PKF plain hex head; stl; cad pl (chassis mtg to cabinet)
7C600814	Support, cabinet (5X21U and 5X22U)
7K600816	Support, cabinet (5X23U)

©John F. Rider

Compliments of www.nucow.com

MODELS 5X21U, 5X22U,
5X23U, Ch. HS-259

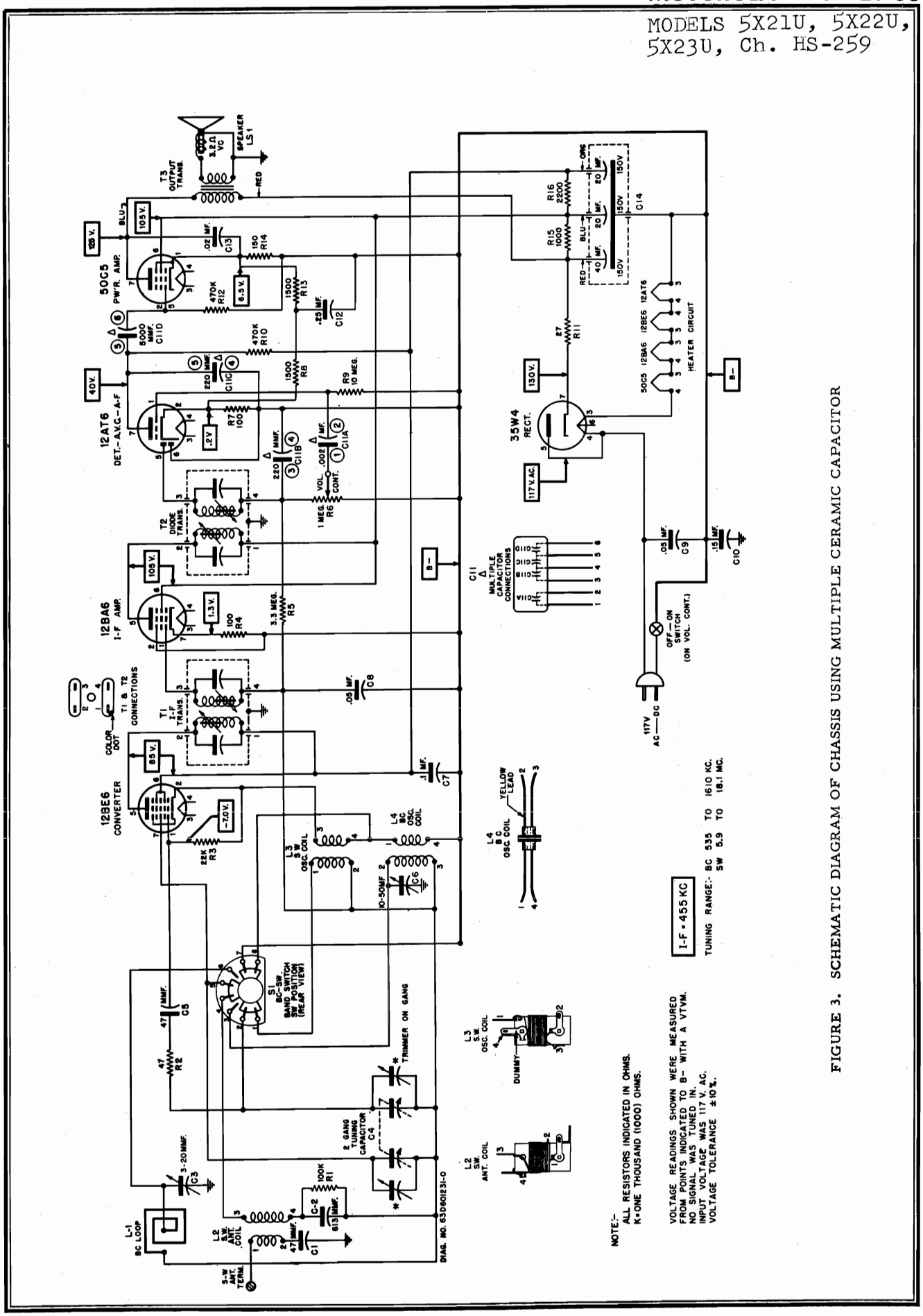

FIGURE 3. SCHEMATIC DIAGRAM OF CHASSIS USING MULTIPLE CERAMIC CAPACITOR

©John F. Rider

Compliments of www.nucow.com

MODELS 5X21U, 5X22U,
5X23U, Ch. HS-259

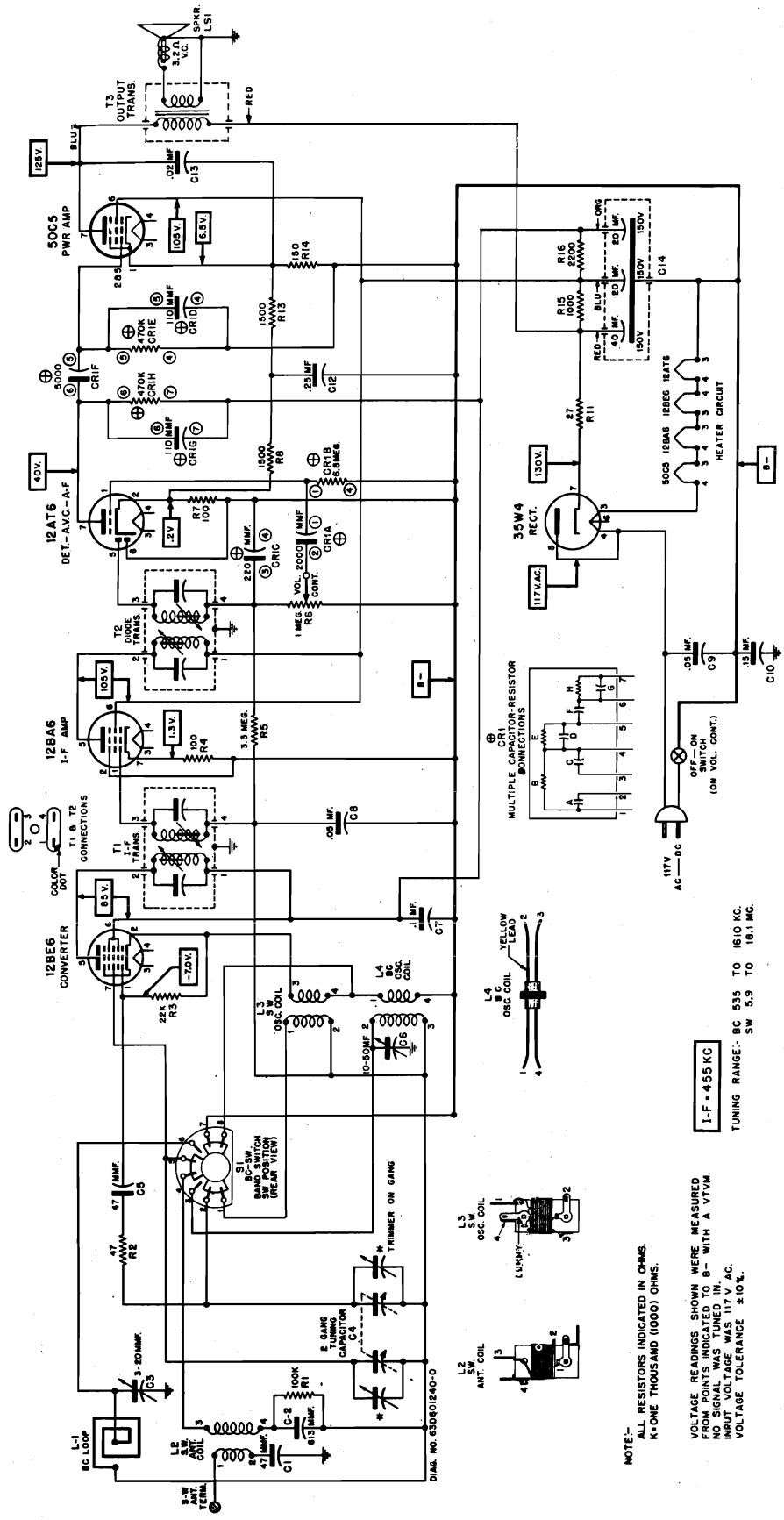

FIGURE 4. SCHEMATIC DIAGRAM OF CHASSIS USING MULTIPLE CERAMIC CAPACITOR-RESISTOR

©John F. Rider

Compliments of www.nucow.com

MODELS 6F11, 6F11B,
Ch. HS-264

GENERAL INFORMATION

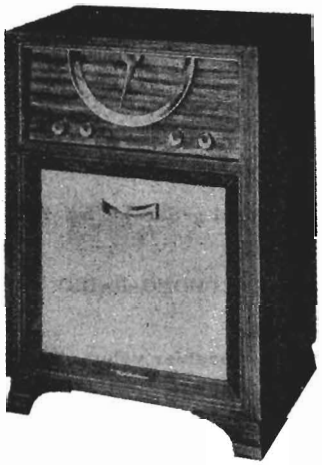

TYPE - AM Radio-Phonograph Combination

RECEIVER MODELS -

Model	Color
6F11	Red-brown mahogany
6F11B	Blonde

TUBE COMPLEMENT -

6BA6	RF Amplifier
6BE6	Converter
6BA6	IF Amplifier
6AV6	Detector & 1st Audio Amp
6K6GT	Power Amplifier
5Y3GT	Rectifier

TUNING RANGE - 535 to 1620 Kc

IF FREQUENCY - 455 Kc

POWER SUPPLY - 117 volts, 60 cycle AC only; 80 watts, including phono motor

PHONOGRAPH - Model RC-37, three-speed: 33, 45 & 78 RPM. Refer to the RC-37 Service Manual for record changer service information.

INSTALLATION & OPERATING INSTRUCTIONS

ANTENNA

No outside antenna or ground is normally required for radio reception, as a loop antenna is located inside the cabinet. Two wires from the chassis connect to the loop.

In locations where additional pick-up is desired, an external antenna may be connected to the clip marked "EXT BC ANT" on the loop.

CONTROLS

Refer to Figure 1 for the locations of the radio operating controls.

Power for both the radio and the record changer is controlled by the VOL-ON-OFF knob. The phonograph motor will not operate, however, until the PHONO-RADIO knob is rotated to "PHONO".

FIGURE 1. OPERATING CONTROLS

SERVICE NOTES

TO REMOVE CHASSIS FROM CABINET:

1. Remove the screws from the cabinet back.
2. Disconnect the phono power lead, the phono pick-up lead, the speaker leads, the line cord, and the antenna loop leads.
3. Remove the pointer escutcheon by pulling it downward.
4. Turn the tuning knob counterclockwise until the pointer reaches the extreme low frequency end of the dial scale.
5. From the back of the cabinet, loosen the pointer adjustment setscrew (see Figure 2), and pull the pointer and shaft assembly from the chassis. CAUTION: Do not remove the nut from the front of the pointer, as the detent ball and spring will fall out and may become lost.
6. Pull off the control knobs.
7. Remove the three chassis mounting screws, from beneath the chassis.
8. Slide the chassis from the cabinet.

TO CALIBRATE DIAL:

1. Turn the tuning knob counterclockwise until the end of its travel is reached.
2. From the back of the cabinet, loosen the pointer adjustment setscrew (see Figure 2). CAUTION: Do not remove the nut from the front of the pointer.
3. Move the pointer until it is in a horizontal position (at the low frequency end of the dial scale).
4. Tighten the adjustment setscrew.

NOTE: If the pointer is moved by hand accidentally, it will be released from a detent in the pointer collar, and no damage to the tuning mechanism will result. To reset the pointer, move it back and forth until it again engages in the detent.

©John F. Rider

Compliments of www.nucow.com

MODELS 6F11, 6F11B,
Ch. HS-264

ALIGNMENT

1. Connect a low range output meter across the speaker voice coil.
2. Connect an AM signal generator as in chart below.
3. Set the signal generator for 400 cycle, 30% modulation.
4. Rotate the PHONO-RADIO switch to the "RADIO" position.
5. Turn the receiver volume control to maximum.
6. Use a small fibre screwdriver for aligning the IF and diode transformers.
7. As stages are brought into alignment, reduce the signal generator output to a level which produces less than 1.27 volts (.5 watt) across the voice coil, to avoid overloading the receiver.
8. See Figure 3 for adjustment locations, and the following chart for procedure.

STEP	DUMMY ANTENNA	GENERATOR CONNECTION	GENERATOR FREQUENCY	GANG SETTING	ADJUST	REMARKS
IF ALIGNMENT						
1.	.1 mf	Grid of conv V-2 (pin 7, 6BE6)	455 Kc	Fully opened	1, 2, 3 & 4 (IF cores)	Adjust for maximum.
RF ALIGNMENT						
2.	.1 mf	Grid of conv V-2 (pin 7, 6BE6)	1620 Kc	Fully opened	5 (Osc)	Adjust for maximum. *
3.	-	-	-	-	-	Connect BC loop to chassis.
4.	-	Across radiation loop**	1400 Kc	Tune in signal	8 (Ant)	Adjust for maximum.

5. If, after the receiver has been aligned as above, it is found to be badly off calibration, it will be necessary to adjust oscillator core (7) as follows: connect the generator to the grid of the converter tube and, with the gang fully closed, adjust core (7) at 535 kc. It is advisable to repeat the oscillator adjustments at 1620 kc and 535 kc several times until the tuning range is correct. Core (7) has been pre-set at the factory and normally should require no retuning.

* If difficulty is encountered in tuning trimmer (5), adjust trimmer (6) to 1/2 turn from tight.

**Connect generator output across 5" diameter, 5 turn loop and couple inductively to receiver loop. Keep loops at least 12" apart.

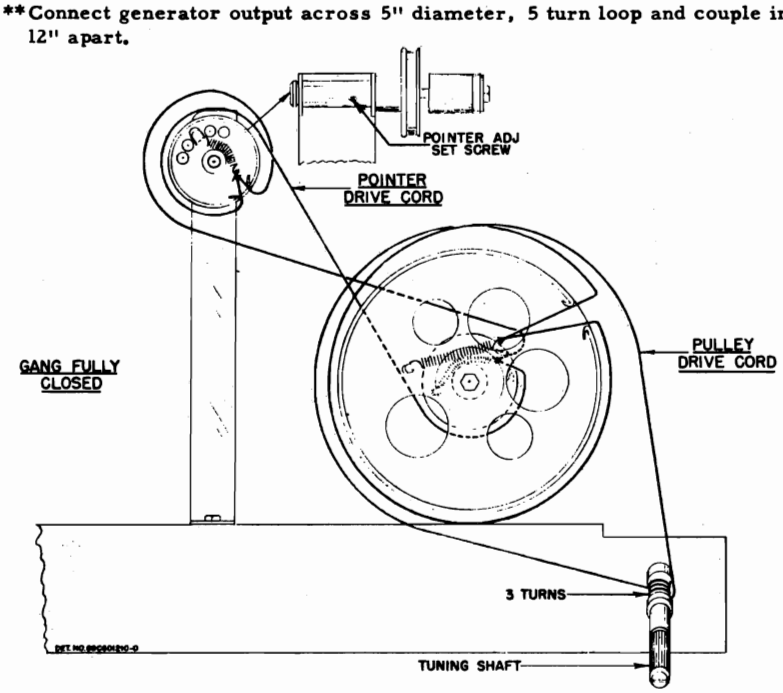

FIGURE 2.
DIAL RESTRINGING DETAIL

©John F. Rider

Compliments of www.nucow.com

MODELS 6F11, 6F11B,
Ch. HS-264

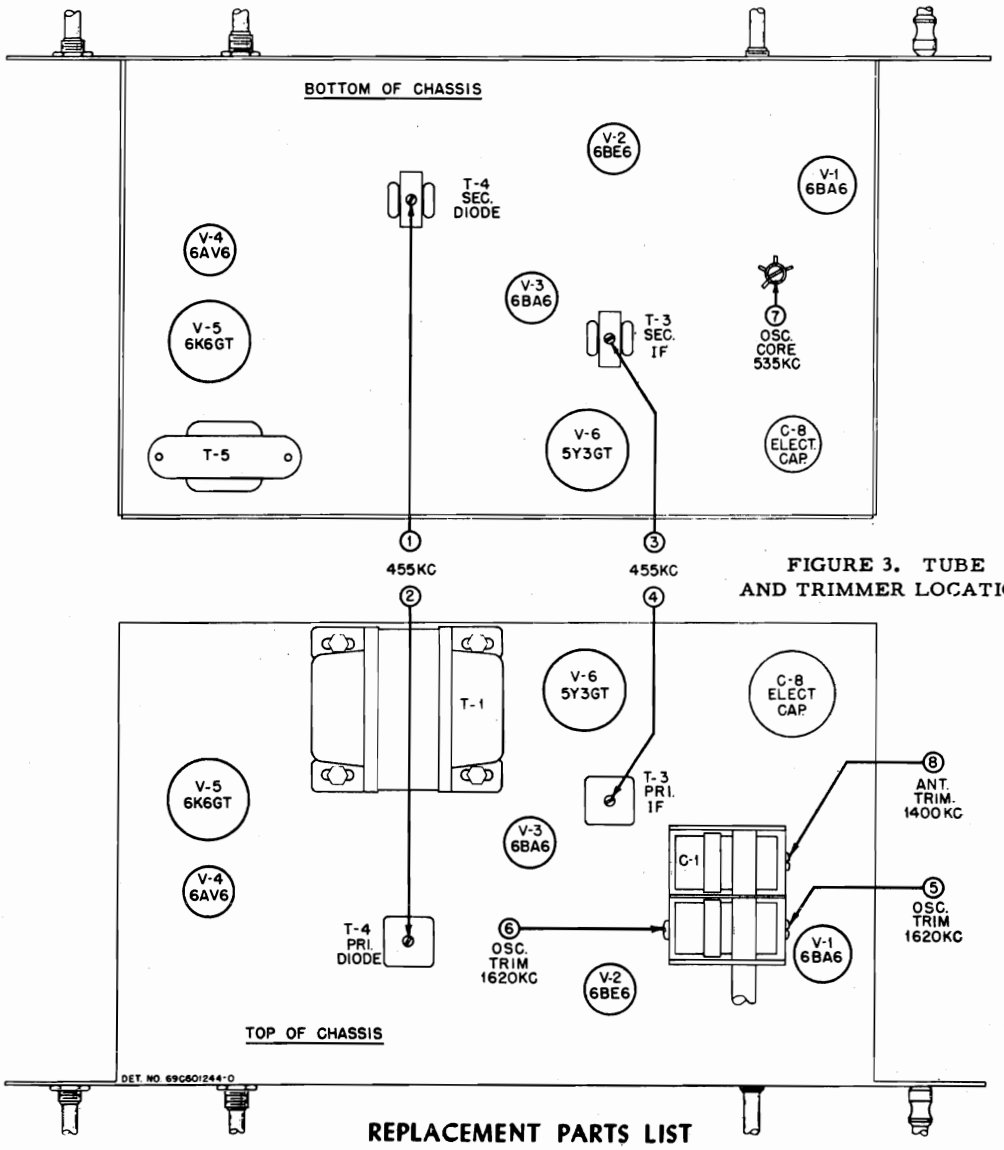

FIGURE 3. TUBE AND TRIMMER LOCATIONS

REPLACEMENT PARTS LIST

NOTE: When ordering parts, specify model number of set in addition to part number and description of part.

Ref. No.	Part No.	Description
CHASSIS PARTS - ELECTRICAL		
Capacitors		
C-1	19B691877	Variable: 2- gang.....
C-2	21B77286	Ceramic: 100 mmf 500V.....
C-3	8R9816	Paper: .05 mf 400V.....
C-4	21K482726	Ceramic, disc type: 10,000 mmf 450V.....
C-5	21B77286	Ceramic: 100 mmf 500V.....
C-6	21K77373	Ceramic: 47 mmf 500V.....
C-7	21K482726	Ceramic; disc type: 10,000 mmf 450V.....
C-8	23B690975	Electrolytic: 40 mf/300V, 40-40 mf/250V, 40 mf/25V.....
C-9	21K482726	Ceramic; disc type: 10,000 mmf 450V.....
C-10	21K482726	Ceramic, disc type: 10,000 mmf 450V.....
C-11	8R9809	Paper: .01 mf 400V.....
C-12	8R9813	Paper: .005 mf 600V.....
C-13	8R9809	Paper: .01 mf 400V.....
C-14	8R9813	Paper: .005 mf 600V.....
C-15	8R9813	Paper: .005 mf 600V.....
C-16	8R490232	Tubular, molded: .047 mf 400V....
C-17	21B77286	Ceramic: 100 mmf 500V.....
C-18	8R9847	Paper: .002 mf 600V.....
Pilot Light		
I-1,2	65X10867	Bulb, pilot light: #44; 6-8V; .25 amp; clear; bayonet base....
Coils		
L-1	24C690896	Loop Antenna.....
Speaker		
LS-1	50C601038	Speaker: 8" PM; 3.2 ohm V.C...

Resistors

NOTE: All resistors are insulated, carbon type unless otherwise specified.

©John F. Rider

Compliments of www.nucow.com

MODELS 6F11, 6F11B,
Ch. HS-264

Ref. No.	Part No.	Description
R-1	6R6004	1 meg 20% 1/2W
R-2	6R5551	120 10% 1/2W
R-3	6R5766	12,000 10% 2W
R-4	6R6069	2200 10% 1/2W
R-5	6R6012	33,000 20% 1/2W
R-6	6R6056	47,000 20% 1/2W
R-7	6R5766	12,000 10% 2W
R-8	17A690973	Wire wound: 360 10% 3W; centic tapped
R-9	6R6270	220 10% 1/2W
R-10	6R6056	47,000 20% 1/2W
R-11	6R6056	47,000 20% 1/2W
R-12	6R3927	2.2 meg 20% 1/2W
R-13	6R2109	10 meg 20% 1/2W
R-14	6R6032	470,000 20% 1/2W
R-15	18A600974	Volume control: 2 meg; tapped at 600,000 ohms; includes ON-OFF switch
R-16	6R6074	68,000 10% 1/2W
R-17	18K77399	Tone Control: 1 meg
R-18	6R6032	470,000 20% 1/2W
R-19	6R6015	220,000 20% 1/2W
R-20	6R5593	470 10% 1W

Switches

S-1	40B601065	Switch, PHONO-RADIO

Transformers

T-1	25B600684	Power Transformer
T-2	24K691878	Oscillator Transformer: white & red dot
T-3	24B485553	IF Transformer (green dot): 455 Kc; complete with capacitors, cores, and shield
T-4	24K485555	Diode Transformer (pink dot): 455 Kc; complete with capacitors, cores, and shield
T-5	25B600969	Audio Output Transformer

CHASSIS PARTS - MECHANICAL

7C690567	Bracket, gang mtg
7A600965	Bracket, pilot light mtg
7B600801	Bracket, pointer mtg
7A77337	Bracket, tuning shaft
43A890397	Bushing, tire cord strain relief (use with 43K890398)
43K890398	Bushing, tire and retainer (use with (43A890397)
42A485548	Clip, coil can mtg (IF transformers).
11M8944	Cord, dial (pointer drive)
30K21859	Cord, line: with plug; 9 ft long
15A600877	Cover, volume control: with insulator
1X600495	Lead and Plug Assembly, phono pick-up.
4S9751	Lockwasher int-ext: #8; cad pl pointer & gang drive pulleys mtg)
2S7051	Nut, hex palnut: 3/8-32 x 9/16; cad pl (control mtg)
28K71775	Plug, phono pick-up
49A690559	Pulley, gang drive: 3 1/2" diameter
49A690558	Pulley, pointer drive: 1 1/4" diameter
9A600040	Receptacle, phono motor: 3 prong; includes shell
5S7771	Rivet: .088 x 3/16 stl; nkl pl (min socket mtg)
5S7707	Rivet: .122 x 5/32 stl; nkl pl (term strip mtg)
5S7701	Rivet: .122 x 3/16 stl; nkl pl (output trans mtg)
5S7700	Rivet: .122 x 1/4 stl; nkl pl (octal socket mtg)
3S7326	Screw, machine: 8-32 x 3/16 plain locking hex head; cad pl (gang mtg)
3S7163	Screw, machine: 8-32 x 1/4 plain hex head; cad pl (pointer & gang drive pulleys mtg)
3S2695	Screw, sheet metal: #6 x 3/16 PKZ plain hex head; cad pl (holds gang mtg brkt)
3S7506	Screw, sheet metal: #6 x 1/4 PKZ plain hex head; cad pl (holds pointer mtg brkt)
3S7454	Screw, sheet metal: #8 x 1/4 PKZ plain hex head; cad pl (pilot light brkt mtg)
3S7475	Screw, sheet metal: #8 x 1/4 PKZ slotted acron head; cad pl (power trans mtg)
3S7103	Setscrew: 8-32 x 1/8 allen head; cad pl (pointer mtg)
1K601085	Shaft and Pulleys Assembly, pointer mtg.
1X600489	Shaft, tuning: complete with pulley
15A690616	Shell, receptacle (on phono motor receptacle)
9K600968	Socket, pilot light
9K484167	Socket, tube: miniature; 7-prong
9A76209	Socket, tube: octal
41A14244	Spring, tension (pointer drive cord).
31K37494	Strip, terminal: 4 insulated lugs, #3 gnd; 3/8" spacing
31K90046	Strip, terminal: 5 insulated lugs, #4 gnd; 3/8" spacing
29K5405	Terminal pin (on speaker leads)
4A70015	Washer, "C" (tuning shaft mtg)
4A21941	Washer, "C" (holds pointer mtg shaft & pulley)
4S7555	Washer, flat: 1/4 x .128 x .033 stl; cad pl (output trans mtg)
4S7582	Washer, flat: 1/2 x .195 x .033 stl; cad pl (pointer & gang drive pulleys mtg)
4A691006	Washer, flat: double "D" (pointer & gang drive pulleys mtg)

MODEL 6F11 CABINET PARTS

43A4326	Ball, steel: 1/8" dia (pointer detent)
38K691915	Button, plug (on record changer)
16F600649	Cabinet, console: red-brown mahogany; complete less pointer escutcheon and dial scale
13K600651	Cloth, grille: 17 1/2" x 18 1/4"; mahogany
15C600874	Cover, cabinet back
34K601066	Dial scale
34K600817	Escutcheon, pointer
5S7870	Eyelet: brass (on R. C. drawer panel-holds extra spindle)
5A71081	Eyelet, chassis mtg: plain; 9/32" long
5A600963	Eyelet, chassis mtg: pierced; 1/8" long
5A71092	Grommet, chassis mtg: rubber
36K601052	Knob, control (VOL-ON-OF): walnut-mahogany
36K601053	Knob, control (PHONO-RADIO): walnut-mahogany
36K601054	Knob, control (TONE): walnut-mahogany.
36K601055	Knob, control (TUNING) walnut-mahogany
4S7657	Lockwasher ext: #8; cad pl (spkr mtg)
2S7005	Nut, hex: 6-32 x 1/4 stl; cad pl (pointer mtg)
2S7003	Nut, hex: 8-32 x 5/16;cad pl (spkr mtg)
62K70581	Overlay, logotype: "Motorola"; gold lacquer finish
1X600851	Pointer and Collar Assembly (less shaft and sleeve)
55K600653	Pull, record changer drawer: satin brass
3K600655	Screw, machine: 8-32 x 1/2 cross slot head; statuary bronze finish (R.C. drawer pull mtg)
3S7536	Screw, sheet metal: #6 x 3/8 PKA slotted acron head; antique copper finish (back cover mtg)

©John F. Rider

Compliments of www.nucow.com

3K653	Screw, speaker mtg: 8-32 x 1 1/4" copper oxide finish.....
1A690738	Shaft and Sleeve Assembly, pointer: less detent spring and ball, and pointer....
55K600654	Slide, record changer (on sides of R. C. drawer).....
2S400199	Speed nut: for .050 stud (dial scale mtg).....
41A690732	Spring, compression (pointer detent)..
4S1765	Washer, flat: 1/2 x .147 x .015 stl; cad pl (pointer mtg).....

MODEL 6F11B CABINET PARTS - Same as 6F11 except:

16K600650	Cabinet, console: blonde; complete, less pointer excutcheon and dial scale.....
13K600652	Cloth, grille: 17 1/2" x 18 1/4"; egg shell.....
36K601058	Knob, control (VOL-ON-OFF); tan.....
36K601059	Knob, control (PHONO-RADIO): tan.....
36K601061	Knob, control (TONE): tan.....
36K601062	Knob, control (TUNING): tan.....
3K600656	Screw, machine: 8-32 x 1/2 cross slot head: brass (R. C. drawer pull mtg).

RECORD CHANGER: Model RC-37, Pages RCD.CH.21-17,18 to RCD.CH.21-29.

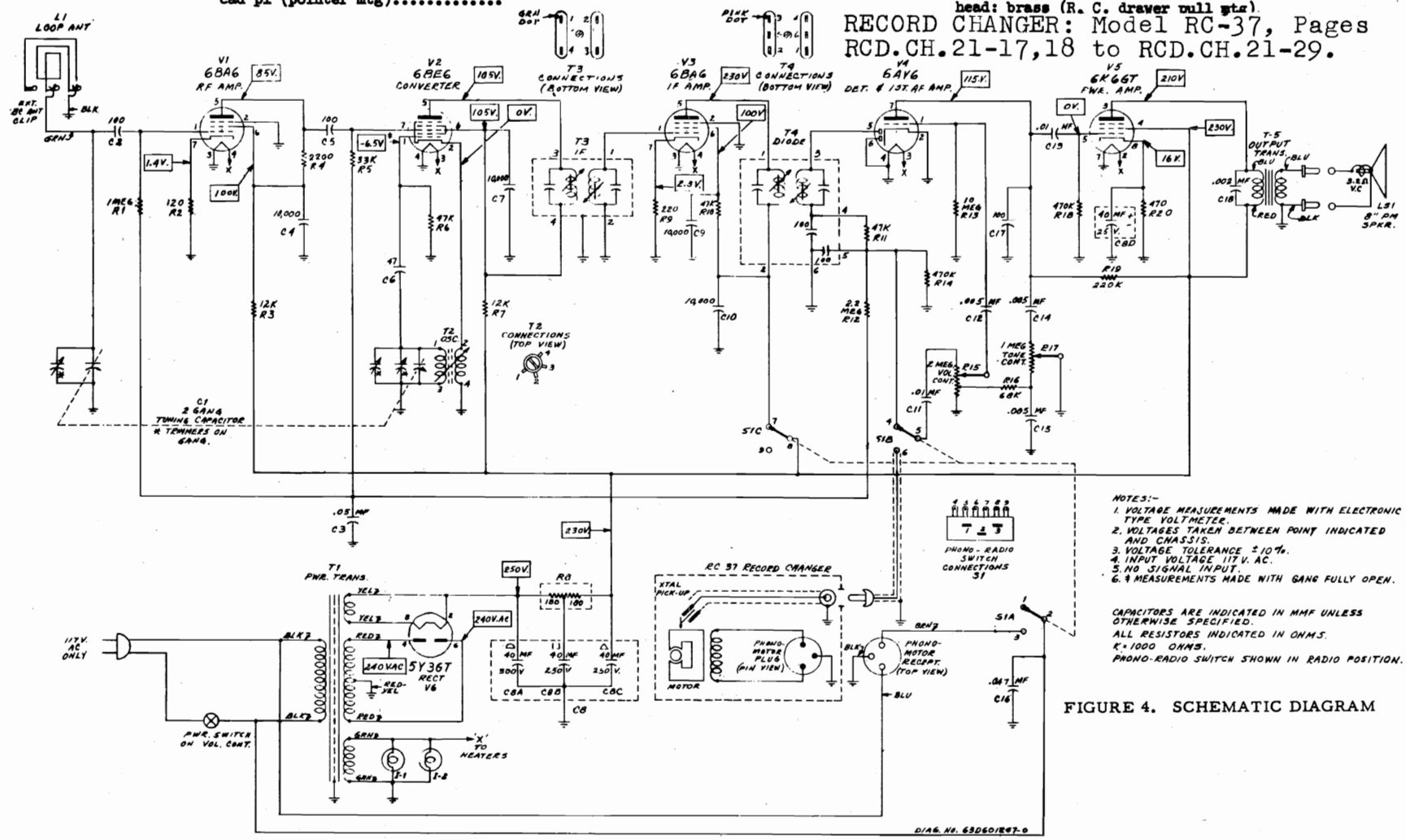

NOTES:-
1. VOLTAGE MEASUREMENTS MADE WITH ELECTRONIC TYPE VOLTMETER.
2. VOLTAGES TAKEN BETWEEN POINT INDICATED AND CHASSIS.
3. VOLTAGE TOLERANCE ±10%.
4. INPUT VOLTAGE 117 V. AC.
5. NO SIGNAL INPUT.
6. ♦ MEASUREMENTS MADE WITH GANG FULLY OPEN.

CAPACITORS ARE INDICATED IN MMF UNLESS OTHERWISE SPECIFIED.
ALL RESISTORS INDICATED IN OHMS.
K = 1000 OHMS.
PHONO-RADIO SWITCH SHOWN IN RADIO POSITION.

FIGURE 4. SCHEMATIC DIAGRAM

©John F. Rider

Compliments of www.nucow.com

MODELS 6L1, 6L2,
Ch. HS-226

GENERAL INFORMATION

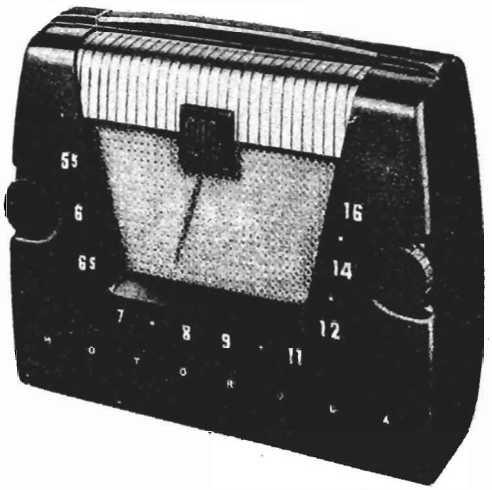

TYPE - Five-tube, three-power (AC/DC, Battery) portable, with a selenium rectifier. A loop antenna is housed in the back cover.

TUNING RANGE - 535 to 1620 Kc IF - 455 Kc

TUBE COMPLEMENT - 1U4 - RF Amplifier
1R5 - Converter
1U4 - IF Amplifier
1U5 - Det, AVC & 1st AF Amp
3V4 - Power Amplifier
Rectifier - Selenium type

POWER SUPPLY - Operates from 117 volts AC or DC (15 watts), or self-contained battery pack. Use an Eveready #753 or a General #60A-6F6-5 battery pack.

OPERATING INSTRUCTIONS

CONTROLS. The volume control and power switch are combined and are operated with the left-hand knob. Select stations with the right-hand knob.

TO OPEN BACK COVER. Insert a coin or similar object into the slots on either side of the cabinet, and twist until the two sections of the cabinet separate. To close, merely snap together.

CAUTION: When closing the cover, be careful not to pinch the line cord or other leads.

HOUSE CURRENT OPERATION. The power cord is located inside the cabinet and can be reached by opening the back cover. Pass the cord through the slot in the side of the cabinet before closing the cover. Insert the power plug into any 117 volt AC or DC outlet. If the receiver does not operate from DC power, reverse the line cord plug in the power outlet.

BATTERY OPERATION. Open the back cover and install the battery pack, following the instructions in Figure 1. Insert the line cord plug into the receptacle on the receiver chassis or the receiver will not operate from its battery. If the receiver is to be operated for a long period of time from AC or DC, or is to be placed in storage, remove the battery and store it in a cool place. Replace the battery when low volume or fuzzy tone is noticed. The condition of the battery will not affect the operation of the receiver from AC or DC. Never leave a low or run-down battery in the receiver because it will leak or swell and damage the receiver.

ANTENNA. A loop antenna is built into the rear cover of this receiver. Because of the slightly directional characteristics of the loop antenna, reception from some stations may be improved by rotating the receiver. In extremely noisy locations, rotate the entire receiver until minimum noise and maximum signal pickup are obtained.

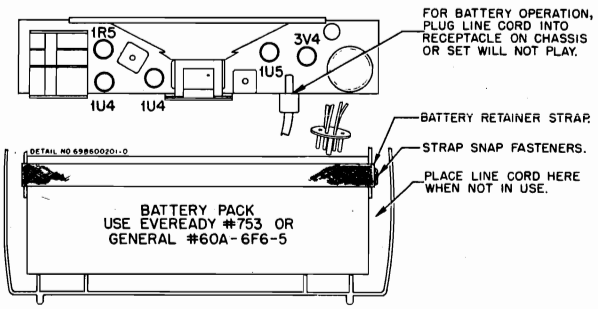

FIGURE 1. BATTERY & TUBE LOCATIONS

ALIGNMENT

NOTE: The receiver may be operated either from a battery or from the commercial power lines during alignment. If AC power is used, it is recommended that an isolation transformer be placed between the power line and the receiver. If an isolation transformer is not available, connect the low side of the signal generator to B- through a .1 mf capacitor.

PROCEDURE:-

1. Connect a low range output meter across the speaker voice coil.
2. Connect the low side of the signal generator to B-.
3. Set the signal generator for 400 cycle, 30% modulation.
4. Turn the receiver volume control to maximum.
5. Use a small fibre screwdriver for aligning the IF and diode transformers.
6. As stages are brought into alignment, reduce the signal generator input to keep the output of the receiver at approximately .05 watts (.05 watt = .40 volts on the output meter) to avoid overloading the receiver.
7. See Figure 2 for adjustment locations and the following chart for procedure.

©John F. Rider

Compliments of www.nucow.com

MODELS 6L1, 6L2,
Ch. HS-226

ALIGNMENT CHART

STEP	DUMMY ANTENNA	GENERATOR CONNECTION	GENERATOR FREQUENCY	GANG SETTING	ADJUST	REMARKS
IF ALIGNMENT						
1.	.1 mf	Grid of conv. (pin 6, 1R5)	455 Kc	Fully open	1, 2, 3 & 4	Adjust for maximum.
RF ALIGNMENT						
2.	-	-	-	Fully closed	Pointer	Set pointer as shown in Figure 3.
3.	.1 mf	Grid of RF Amp (pin 6, 1U4)	1620 Kc	Fully open	5	Adjust for maximum
4.	.1 mf	"	1400 Kc	Tune for maximum	6	Adjust for maximum
5.	-	Radiation loop*	"	"	7	With chassis installed in cabinet and output meter connected to speaker, open rear cover slightly and adjust for maximum. NOTE: Battery pack should be in cabinet.

*Connect generator output across 5" diameter, 5-turn loop and couple inductively to receiver loop. Keep loops at least 12" apart.

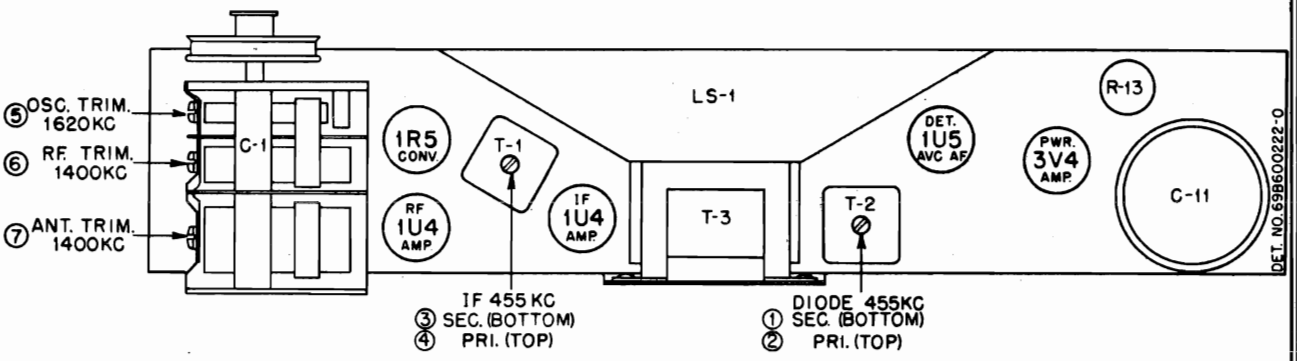

FIGURE 2. TUBE & TRIMMER LOCATIONS

SERVICE NOTES

The chassis of this receiver is isolated from the AC power line circuit by a capacitor to eliminate the shock hazard when handling the receiver. However, as an additional precaution when aligning or servicing the receiver from AC, an isolation transformer should be inserted between the power line and the chassis.

The tubes are exposed when the rear cover is opened. It is not necessary to remove the chassis to replace tubes.

To remove the chassis from the cabinet:

1. Open the rear cover and remove the battery pack.
2. Disconnect the two leads from the chassis to the loop antenna.
3. Pull off the two control knobs on the front of the cabinet.
4. Remove the two hex head screws located under the knobs.
5. Slide the chassis out of the cabinet.

©John F. Rider

Compliments of www.nucow.com

MODELS 6L1, 6L2,
Ch. HS-226

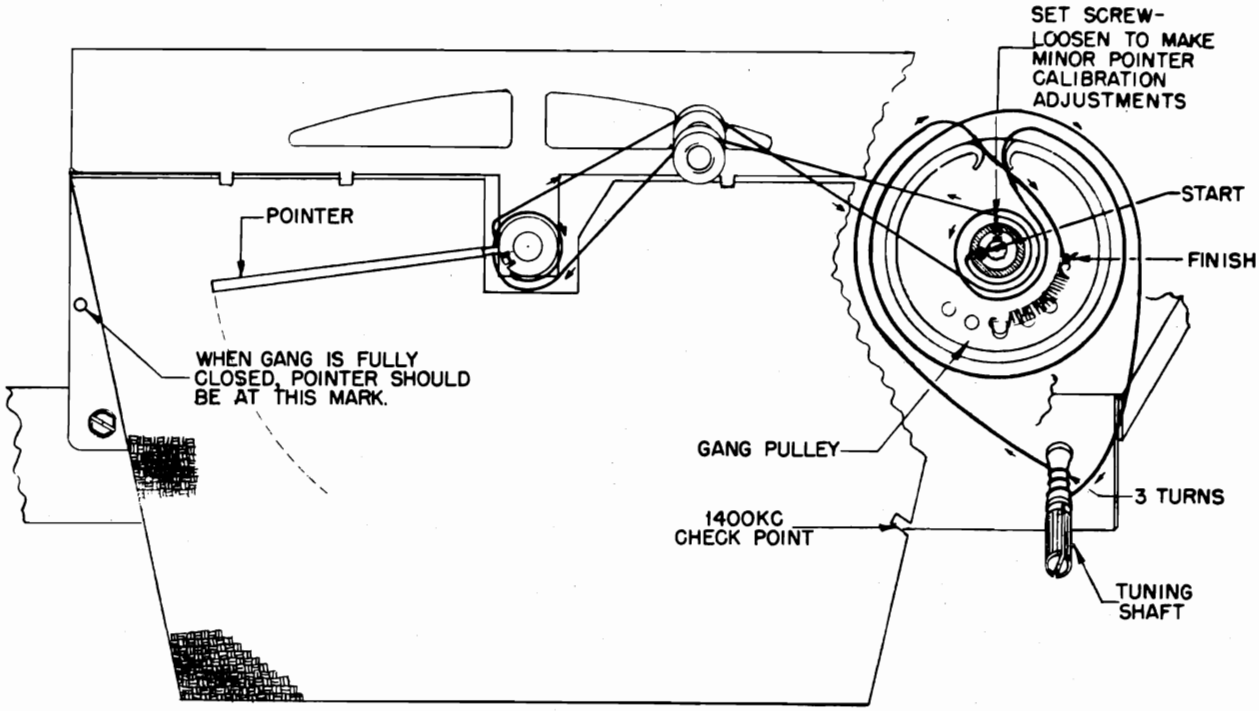

FIGURE 3. STRING DRIVE

REPLACEMENT PARTS LIST

REF. NO.	PART NO.	DESCRIPTION
CHASSIS PARTS - ELECTRICAL		
CAPACITORS		
C-1	19B692045	Variable: 3-gang .....
C-2	8K71213	Paper: .05 mf 100V .....
C-3	21B77286	Ceramic: 100 mmf 500V .....
C-4	21K482726	Ceramic, disc type: 10,000 mmf 450V .....
C-5	21K482726	Ceramic, disc type: 10,000 mmf 450V .....
C-6	21K482726	Ceramic, disc type: 10,000 mmf 450V .....
C-7	8K471635	Paper: .05 mf 400V .....
C-8A, B,C,D	21B482847	Ceramic, multiple: 2000 mmf, 220 mmf, 220 mmf, 5000 mmf .....
C-9	21K482726	Ceramic, disc type: 10,000 mmf 450V .....
C-10	8K71213	Paper: .05 mf 100V .....
C-11	23K76985	Electrolytic: 40-40-20 mf/150V, 80 mf/25V; includes cover ....
C-12	8R490210	Molded: .01 mf (100,000 mmf) 200V
C-13	21A470789	Ceramic, disc type: 5000 mmf 450V .....
RECTIFIER		
E-1	48K692077	Selenium Rectifier: half-wave; 75 ma .....
COILS		
L-1	24C692074	Loop Antenna Assembly: includes panel .....
L-2	24B692115	RF Coil .....
L-3	24B692114	Oscillator Coil .....
SPEAKER		
LS-1	50C692044	Speaker: 4" x 6" PM; 3.2 ohm VC.
RESISTORS		
		Note: All resistors are insulated carbon type unless otherwise specified.
R-1	6R3927	2.2 meg 20% 1/2W .....
R-2	6R3988	5.6 meg 10% 1/2W .....
R-3	6R2118	3.3 meg 20% 1/2W .....
R-4	6R3927	2.2 meg 20% 1/2W .....
R-5	6R6301	1000 20% 1/2W .....
R-6	6R6075	100,000 20% 1/2W .....
R-7	6R6012	33,000 20% 1/2W .....
R-8	6R5585	8.2 meg 10% 1/2W .....
R-9	6R6004	1 meg 20% 1/2W .....
R-10	17A76986	Wire wound: 150 10% 2-1/2W...
R-11	18K480039	Volume control: 1 meg; with sw.
R-12	6R2109	10 meg 20% 1/2W .....
R-13	17B692047	Wire wound: 2000; center-tapped
R-14	6R6269	820 10% 1/2W .....
R-15	6R2118	3.3 meg 20% 1/2W .....
R-16	6R6004	1 meg 20% 1/2W .....
R-17	6R2118	3.3 meg 20% 1/2W .....
R-18	6R3933	220 20% 1/2W .....
R-19	6R3949	470 10% 1/2W .....
R-20	6R6010	330 20% 1/2W .....

©John F. Rider

Compliments of www.nucow.com

MODELS 6L1, 6L2,
Ch. HS-226

SWITCHES

S-1	40A27114	Slider Switch: 3PDT .....
S-2	-	Power Switch: on volume control.

TRANSFORMERS

T-1, 2	24K600013	IF & Diode Transformer, 455 Kc: includes capacitors; less shield
T-3	25B692076	Output Transformer .....

PART NUMBER	DESCRIPTION
CHASSIS PARTS - MECHANICAL	
16K692102	Baffle, speaker: includes cloth .....
1X692121	Bottom Cover Assembly: includes brackets & battery strap .....
43A692012	Bushing, line cord strain relief (use with 43K692013) .....
1X692118	Cable Assembly, battery: includes 9-pin plug .....
42A485548	Clip, coil can mtg (IF coils) ...
11M8944	Cord, dial: 18#; black .....
30K692049	Cord, line: with plug; 6 ft long
5A19658	Eyelet, spacer (gang mtg) .....
5A70404	Grommet, rubber (gang mtg) .....
9A22056	Insulator, electrolytic mtg .....
4S7666	Lockwasher, external: #6; cad pl.
4S7650	Lockwasher, internal: #6; cad pl.
29R3013	Lug, soldering (on gang mtg screw).
29R5235	Lug, soldering: #6 (on battery strap bracket) .....
2S7005	Nut, hex: 6-32 x 1/4 stl; cad pl (selenium rectifier mtg).....
2S7051	Nut, hex (Palnut): 3/8-32 x 9/16; cad pl (vol cont mtg) .....
29K5401	Pin, loop lead .....
64A692072	Plate, output trans mtg .....
28K77272	Plug, 9-pin (on battery cable).....
52A692091	Pointer, dial: red .....
49A21741	Pulley, cord .....
49A692078	Pulley, pointer drive .....
1A692119	Pulley Assembly (on gang) .....
1X692120	Pulley and Plate Assembly: pointer drive; includes mtg plate and 3 pullies .....
43K692013	Retainer, strain relief bushing (use with 43A692012) .....
5S7771	Rivet: .088 x 3/16 stl; nkl pl (tube socket mtg) .....
5S7707	Rivet: .122 x 5/32 stl; nkl pl (terminal strip & output trans mtg).
5S7701	Rivet: .122 x 3/16; stl; nkl pl (electrolytic insulator mtg) ...
5K74560	Rivet, shoulder (drive cord pulley mtg) .....
5A692104	Rivet, shoulder (pointer drive pulley mtg) .....
3S7350	Screw, machine: 6-32 x 1/4 slotted hex head lockscrew; cad pl (spkr mtg) .....
3S490354	Screw, machine: 6-32 x 5/8 slotted hex head; cad pl (gang mtg) .....
3S2977	Screw, machine: 6-32x1-1/8 pl hex hd; stl; cad pl (rec mtg).....
3S2695	Screw, sheet metal: #6 x 3/16 PKZ plain hex head; cad pl (switch mtg) .....
3S7506	Screw, sheet metal: #6 x 1/4 PKZplain hex head; cad pl (R-13 & T-3 mtg) .....
3S9700	Setscrew: 6-32 x 3/16 Allen head; cad pl (gang pulley mtg) .....
47A692106	Shaft, tuning .....
9A690129	Socket, tube: miniature; 7-prong .
41A14244	Spring, tension (dial drive)
35K692125	Strap, battery: with button .....
31K692075	Strip, terminal: 1 insulated lug; end mtg; 3/8" spacing .....
46A600011	Stud, chassis mtg (on front of chassis) .....
4A70015	Washer, 'C' (on tuning shaft)...
4S7551	Washer, flat: 9/32 x .120 x .025; brass (battery strap mtg) .....
4S8221	Washer, flat: 3/8 x .144 x .032; brass (spkr baffle mtg) .....
4S8253	Washer, flat: 5/8 x .390 x .020 brass (vol cont mtg) .....
4K71133	Washer, spring (on tuning shaft).
CABINET PARTS	
16E691796	Cabinet, front section: green plastic; less grille,handle and hardware (6L1)
16K600109	Cabinet, front section: brown plastic; less grille, handle and hardware (6L2)
16D691797	Cabinet, rear section: green plastic; less antenna loop and hardware (6L1).
16K600110	Cabinet, rear section: brown plastic; less antenna loop and hardware (6L2).
35A692073	Channel, rubber (inside cabinet front)
42K891863	Clip, cabinet locking (inside cabinet front) .....
42A480078	Clip, cabinet locking (inside cabinet back) .....
42A600010	Clip, retainer (speaker grille).....
55A692127	Cover, handle mtg (over ends of carrying handle) .....
13B691958	Grille, speaker: plastic .....
55A691943	Handle, carrying: black plastic; less spring (6L1) .....
55K600111	Handle, carrying: brown plastic; less spring (6L2) .....
14A600096	Insulator: fibre (on carrying handle) .....
36B691956	Knob, control: green plastic (6L1) ..
36K600112	Knob, control: brown plastic (6L2) ..
13K691929	Medallion (on front of cabinet) .....
64A692129	Plate, handle mtg: cad pl (under ends of carrying handle) .....
64A691941	Plate, medallion (under medallion)...
3S2949	Screw, machine: 6-32 x 5/16 plain hex head; cad pl (handle mtg).....
3S476083	Screw, machine: 6-32 x 5/16 slotted locking hex head; cad pl (chassis mtg) .....
3S488008	Screw, sheet metal: #4 x 1/4 Phillips round head; cad pl (cabinet locking clip mtg) .....
2S490840	Speednut: for 1/16" stud (medallion mtg) .....
2S476112	Speednut: for .156" stud (spkr grille and ant loop mtg) .....
41A692126	Spring, handle (inside carrying handle)
41A691939	Spring, hinge (on bottom of cabinet) .....
4K780040	Washer, felt (under knobs) .....
4S7610	Washer, flat: 3/8 x 5/32 x .015 stl; cad pl (chassis mtg) .....
4S490841	Washer, flat: 3/4 x .156 x .032; pl (handle mtg) .....

©John F. Rider

Compliments of www.nucow.com

MODELS 6L1, 6L2,
Ch. HS-226

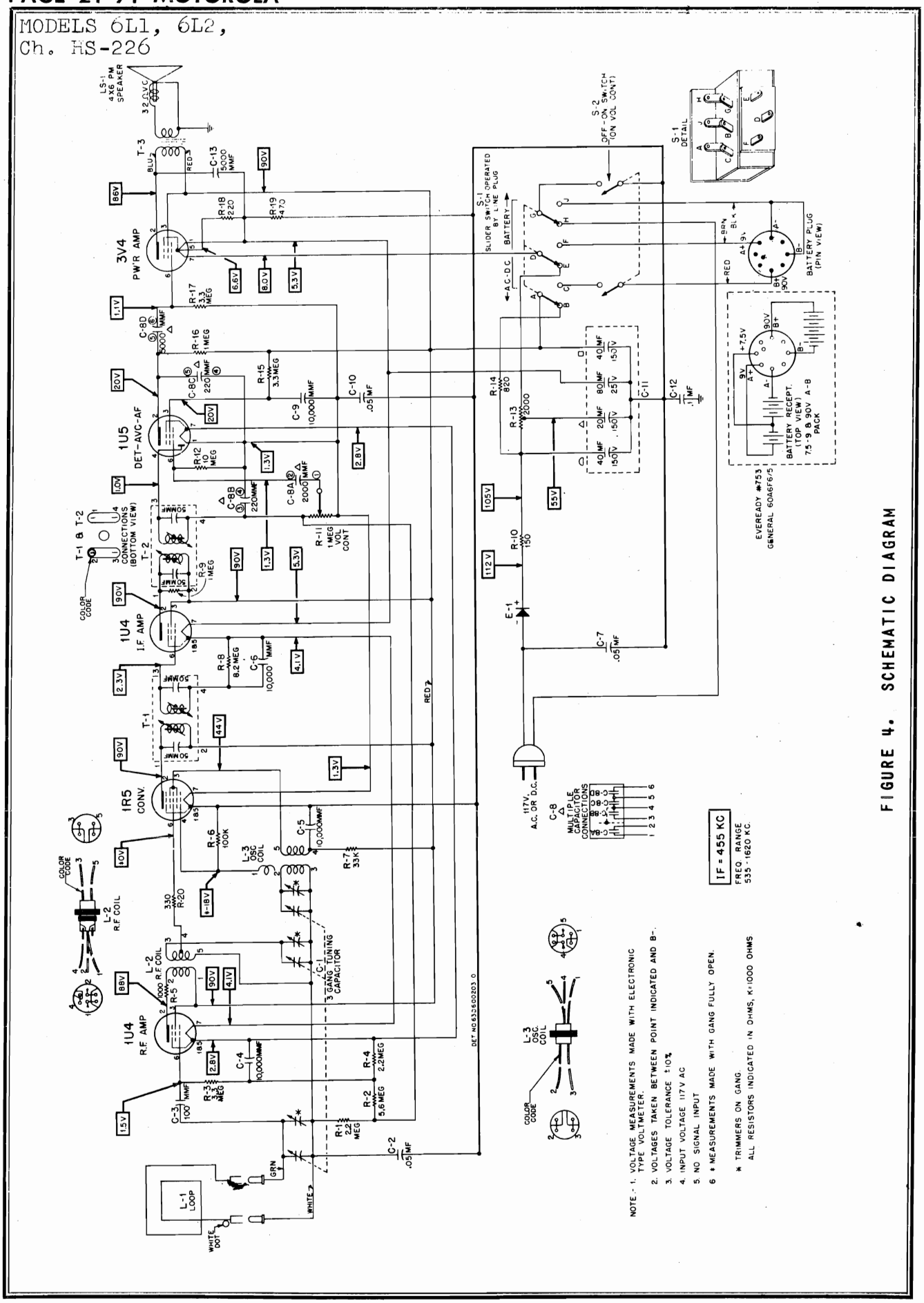

FIGURE 4. SCHEMATIC DIAGRAM

©John F. Rider

Compliments of www.nucow.com

MODELS 6X11U,
6X12U, Ch. HS-245

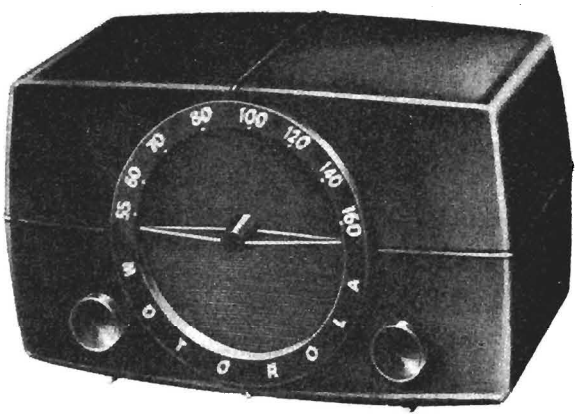

GENERAL INFORMATION

TYPE - AC-DC operated table model superheterodyne receiver with loop antenna.

RECEIVER MODELS -

Model	Color
6X11U	Walnut
6X12U	Ivory

TUNING RANGE - 535 to 1620 Kc IF - 455 Kc

TUBE COMPLEMENT - 12BA6 - RF Amplifier
12BE6 - Converter
12BA6 - IF Amplifier
12AT6 - Det, AVC & 1st AF Amp
35C5 - Power Amplifier
35W4 - Rectifier

POWER SUPPLY - 117 volts AC or DC, 35 watts

INSTALLATION & OPERATING INSTRUCTIONS

POWER SWITCH AND VOLUME CONTROL. Operated with left-hand knob. NOTE: Reverse line plug in electrical outlet if radio does not operate from DC. When operating from AC, reversing the line cord plug in wall outlet, may sometimes improve reception.

TUNING. Tune stations with right-hand knob.

ANTENNA. A built-in loop antenna eliminates the need for an outside antenna in most locations. When receiving a weak station, rotate the receiver slightly for best signal strength. If additional pick-up is necessary, connect an external antenna to the radio by following the instructions printed on the rear panel. CAUTION: Never connect the radio chassis to a water pipe, radiator, or other ground.

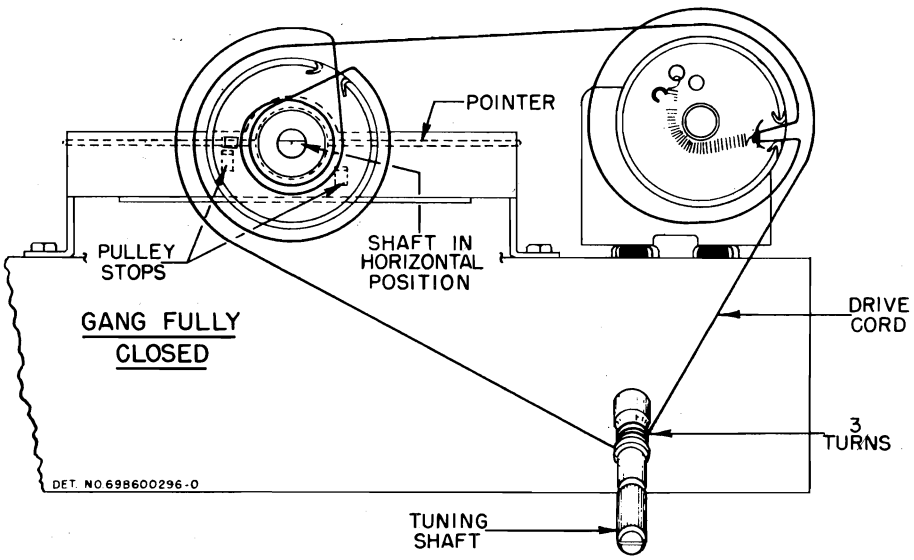

FIGURE 1. STRING DRIVE DETAIL

©John F. Rider

Compliments of www.nucow.com

MODELS 6X11U,
6X12U, Ch. HS-245

SERVICE NOTES*

The chassis of this receiver is isolated from the AC power line circuit by a capacitor to eliminate the shock hazard when handling the receiver. However, as an additional precaution when aligning or servicing the receiver from AC, an isolation transformer should be inserted between the power line and the chassis.

To remove the chassis from the cabinet:

1. Pull off the two radio control knobs.
2. Pull off the pointer.
3. Remove the split plugs which hold the loop to the cabinet.
4. From the back of the cabinet, remove the two hex head screws at the rear edge of the radio chassis.
5. Slide the radio chassis and loop from the cabinet.

ALIGNMENT

NOTE: It is recommended that an isolation transformer be placed between the power line and the receiver to avoid hum and electrical shocks, If an isolation transformer is not available, connect the low side of the signal generator to B- through a .1 mf capacitor.

1. Connect a low range output meter across the speaker voice coil.
2. Connect the low side of the signal generator to B-.
3. Set the signal generator for 400 cycle, 30% modulation.
4. Turn the receiver volume control to maximum.
5. Use a small fibre screwdriver for aligning the IF and diode transformers.
6. As stages are brought into alignment, reduce the signal generator output to a level which produces less than .40 volts (.05 watt) across the voice coil to avoid overloading the receiver.
7. See Figure 2 for adjustment locations and the following chart for procedure.

ALIGNMENT CHART

STEP	DUMMY ANTENNA	GENERATOR CONNECTION	GENERATOR FREQUENCY	GANG SETTING	ADJUST	REMARKS
IF ALIGNMENT						
1.	.1 mf	Rear stator of tuning capacitor	455 Kc	Fully open	1, 2, 3 & 4 (IF cores)	Adjust for maximum.
WAVETRAP						
2.	.1 mf	Rear stator of tuning capacitor	455 Kc	Fully open	5 (Wavetrap)	Adjust for minimum.
RF ALIGNMENT						
3.	.1 mf	Rear stator of tuning capacitor	1620 Kc	Fully open	6 (Osc)	Adjust for maximum.
4.	-	Radiation loop*	1400 Kc	Tune for max	7 (Ant)	Adjust for maximum.

*Connect generator output to 5" diameter, 5 turn loop and couple inductively to receiver loop. Keep loops at least 12" apart.

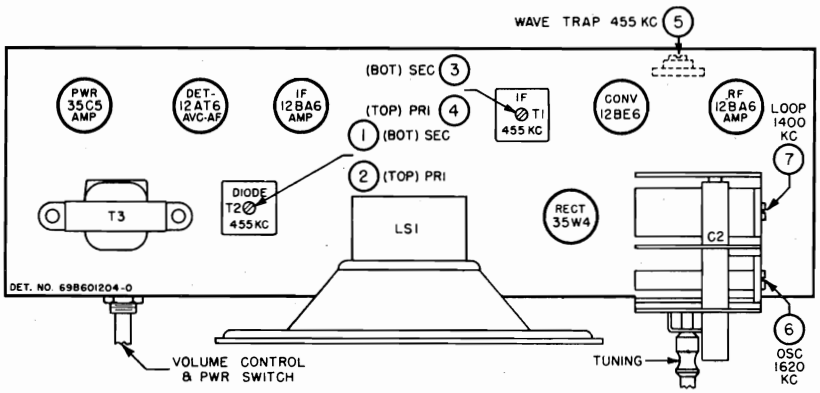

FIGURE 2. TUBE & TRIMMER LOCATIONS

©John F. Rider

Compliments of www.nucow.com

MODELS 6X11U,
6X12U, Ch. HS-245

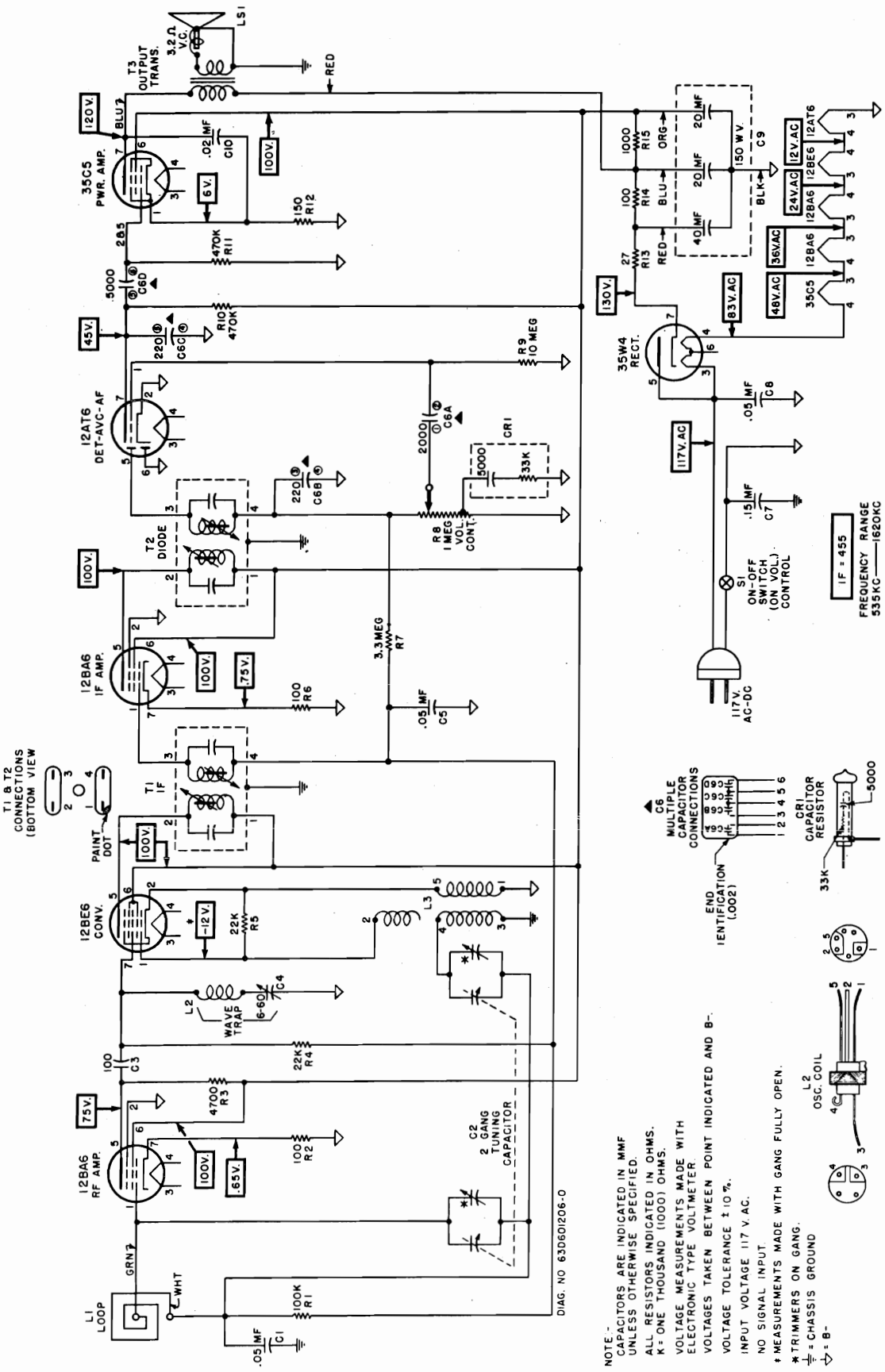

FIGURE 3. SCHEMATIC DIAGRAM OF CHASSIS USING MULTIPLE CERAMIC CAPACITOR

©John F. Rider

Compliments of www.nucow.com

MODELS 6X11U,
6X12U, Ch. HS-245

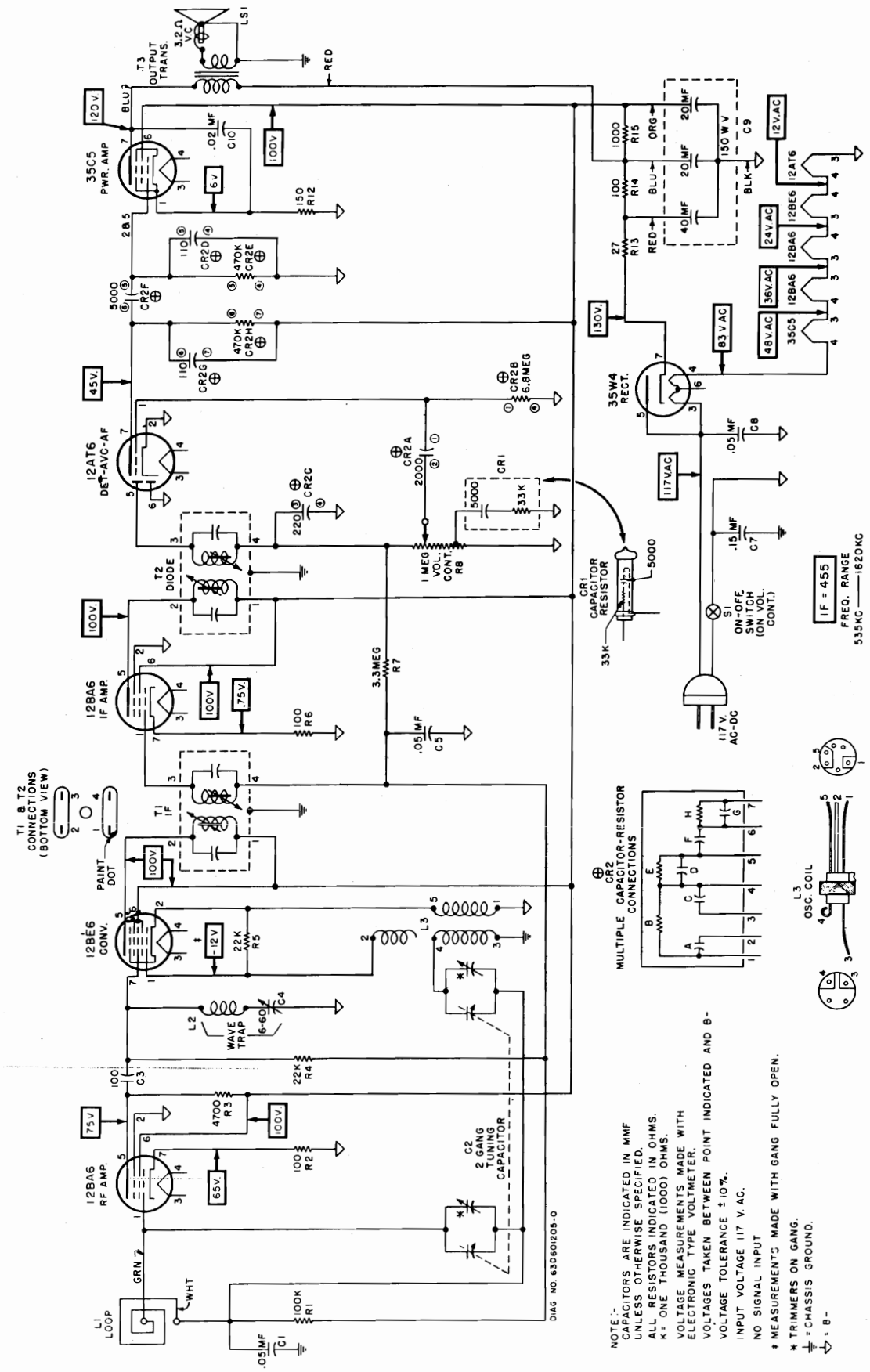

FIGURE 4. SCHEMATIC DIAGRAM OF CHASSIS USING MULTIPLE CERAMIC CAPACITOR-RESISTOR

©John F. Rider

Compliments of www.nucow.com

MODELS 6X11U,
6X12U, Ch. HS-245

REPLACEMENT PARTS LIST

NOTE: When ordering parts specify model number of set in addition to part number and description of part.

Ref. No.	Part Number	Description
CHASSIS PARTS - ELECTRICAL		
Capacitors		
C-1	8R9821	Paper: .05 mf 200V
C-2	19B600483	Variable, 2-gang: includes pulley
C-3	21R6641	Mica: 100 mmf 500V
C-4	20A26941	Mica, variable: 6 mmf-60 mmf; includes bracket
C-5	8R9821	Paper: .05 mf 200V
C-6	21B482847	Ceramic, multiple: 2000 mmf, 220 mmf, 220 mmf, 5000 mmf
C-7	8R9843	Paper: .15 mf 200V
C-8	8R9816	Paper: .05 mf 400V
C-9	23K484234	Electrolytic: 40-20-20 mf/150V
C-10	8R9802	Paper: .02 mf 400V
Capacitor-Resistor		
CR-1	21B484227	Capacitor-Resistor: 2 lead; 33,000 ohms, 5000 mmf
CR-2	21B601007	Capacitor-Resistor: 7 lead; 2000 mmf, 220 mmf, 5000 mmf, 110 mmf, 110 mmf, 6.8 meg, 470,000 ohms, 470,000 ohms
Coils		
L-1	24C600539	Loop and Panel Assembly
L-2	24A77336	Wavetrap
L-3	24K600813	BC Oscillator Coil
Speaker		
LS-1	50K600538	Speaker, PM: 5-1/4"; 3.2 ohm VC.
Resistors		
		Note: All resistors are insulated carbon type unless otherwise specified.
R-1	6R6075	100,000 20% 1/2W
R-2	6R6018	100 20% 1/2W
R-3	6R6039	4700 20% 1/2W
R-4	6R6028	22,000 20% 1/2W
R-5	6R6028	22,000 20% 1/2W
R-6	6R6018	100 20% 1/2W
R-7	6R2118	3.3 meg 20% 1/2W
R-8	18K485925	Volume Control: 1 meg
R-9	6R2109	10 meg 20% 1/2W
R-10	6R6032	470,000 20% 1/2W
R-11	6R6032	470,000 20% 1/2W
R-12	6R3992	150 20% 1/2W
R-13	6R5683	27 10% 1/2W
R-14	6R488025	100 20% 1W
R-15	6R3953	1000 20% 1W
Transformers		
T-1,2	24B485553	IF and Diode, 455 Kc: complete; including padding capacitors and tuning cores
T-3	25B482858	Output

Part Number	Description
CHASSIS PARTS - MECHANICAL	
26A473002	Base, tube shield mtg
1X600627	Bracket and Bushing Assembly, pointer shaft
7K600579	Bracket, loop mtg
7A600476	Bracket, tuning shaft mtg
42A485548	Clip, coil can mtg
42A75825	Clip, electrolytic mtg
30A470651	Cord, line and plug: 6 ft long
5A19658	Eyelet, spacer (gang mtg)
5A70404	Grommet, rubber (gang mtg)
14A482844	Insulator, cord outlet
29R3010	Lug, soldering
2S7051	Nut, hex: 3/8-32 x 9/16; Palnut; stl; pl (volume control mtg)
1X600590	Pulley and Bushing Assembly, pointer drive
5S7771	Rivet: .088 x 3/16; stl; nkl pl (tube socket mtg and shield base mtg)
5S7707	Rivet: .125 x 5/32; stl; nkl pl (tuning shaft bracket mtg, output transformer mtg, variable capacitor mtg, electrolytic clip mtg, and tube spring shield mtg)
3S2294	Screw, machine: 6-32 x 1/2; plain hex head; locking type; stl; cad pl (gang mtg)
3S7477	Screw, machine: 8-32 x 1/4; type #1; plain hex head; stl; cad pl (loop back mtg)
3S7316	Screw, machine: 8-32 x 3/8; slotted hex head; locking type; stl; cad pl (speaker mtg)
3S2965	Screw, sheet metal: #6 x 3/16 PKZ plain hex head; stl; cad pl (pointer shaft bracket mtg)
3S3398	Screw, sheet metal: #6 x 3/8 PKZ plain hex head; stl; cad pl (loop bracket mtg)
3S7148	Setscrew: 6-32 x 1/8; Allen head; stl; cad pl (pointer drive pulley & bushing retainer)
1K600595	Shaft and Pulley Assembly, tuning
47K600509	Shaft, pointer: brass
26A481521	Shield, spring (for 12BE6 tube)
26A90301	Shield, tube (for 12AT6 tube)
9A472534	Socket, tube: 7-prong
9K580218	Socket, tube: 8-prong
4K692188	Washer, "C" (tuning shaft retainer and pointer shaft retainer)
4S7614	Washer, flat: 11/16 x 11/64 x .036 thick; stl; cad pl (loop back mtg)
4K482859	Washer, insulated shoulder (loop bracket mtg)
CABINET PARTS	
16B600169	Cabinet, table model: molded; walnut (6X11U)
16K600175	Cabinet, table model; molded; ivory (6X12U)
13B600535	Grille, cabinet
36B600570	Knob, pointer (6X11U)
36K600571	Knob, pointer (6X12U)
36B600455	Knob, tuning (6X11U)
36K600456	Knob, tuning (6X12U)
38A25507	Plug, split (back mtg)
52A600451	Pointer, dial: brass
3S3371	Screw, sheet metal: #8 x 3/8 PKZ plain hex head; stl; cad pl (chassis mtg)

©John F. Rider

Compliments of www.nucow.com

MODELS 7F11, 7F11B,
Ch. HS-265

GENERAL INFORMATION

TYPE - AM Radio-Phonograph Combination

RECEIVER MODELS -

Model	Color
7F11	Red-brown mahogany
7F11B	Blonde

TUBE COMPLEMENT -

6BA6	RF Amplifier
6BE6	Converter
6BA6	IF Amplifier
6AV6	Detector & 1st Audio Amp
6V6GT	Power Amplifier
6V6GT	Power Amplifier
7Z4	Rectifier

TUNING RANGE - 535 to 1620 Kc

IF FREQUENCY - 455 Kc

POWER SUPPLY - 117 volts, 60 cycle AC only; 85 watts including phono motor.

ANTENNA

No outside antenna or ground is normally required for radio reception, as a loop antenna is located inside the cabinet. Two wires from the chassis connect to the loop.

In locations where additional pick-up is desired, an external antenna may be connected to the clip marked "EXT BC ANT" on the loop.

INSTALLATION & OPERATING INSTRUCTIONS

CONTROLS

Refer to Figure 1 for the locations of the radio operating controls.

Power for both the radio and the record changer is controlled by the VOL-ON-OFF knob. The phonograph motor will not operate, however, until the PHONO-RADIO knob is rotated to "PHONO".

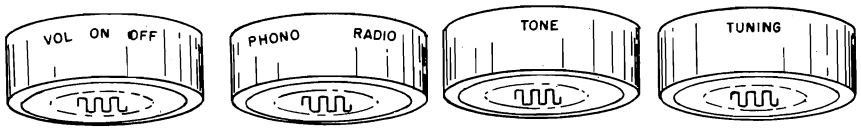

FIGURE 1. OPERATING CONTROLS

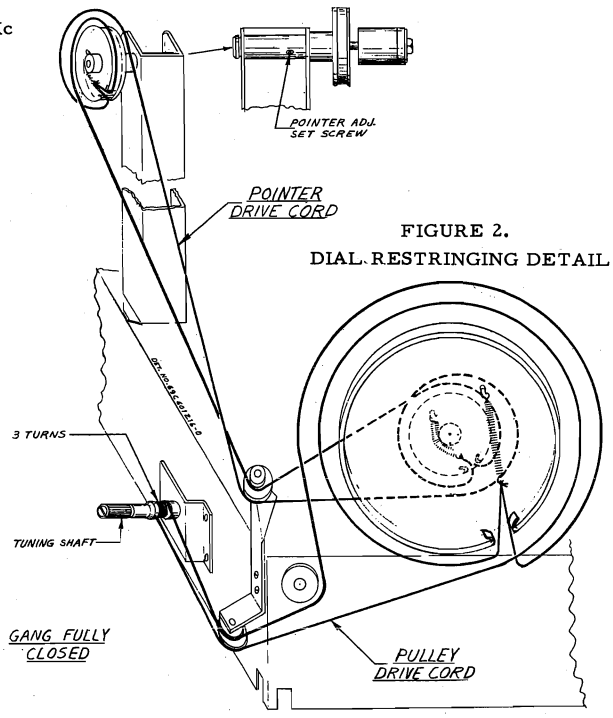

FIGURE 2.
DIAL RESTRINGING DETAIL

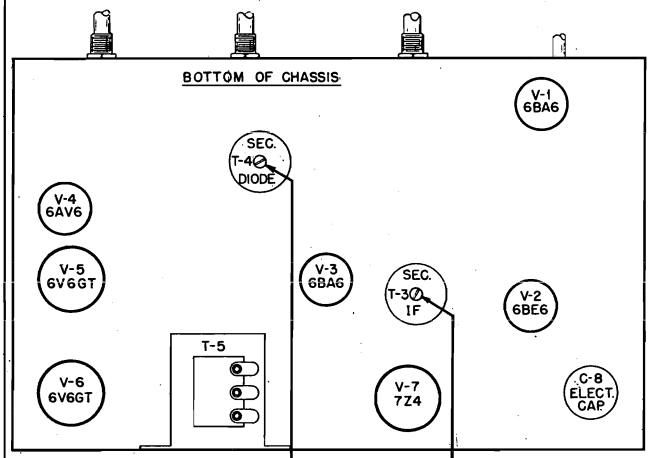

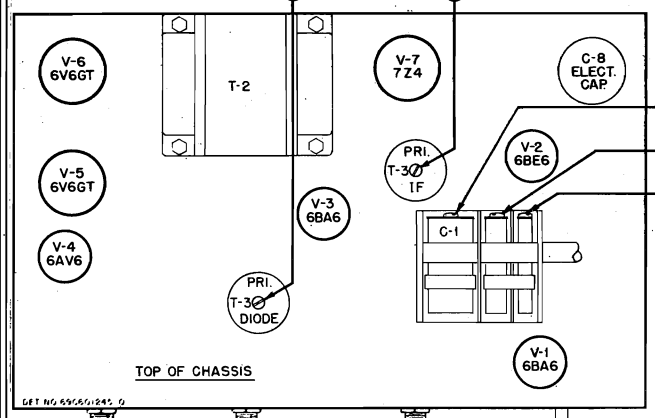

FIGURE 3.
TUBE AND TRIMMER LOCATIONS

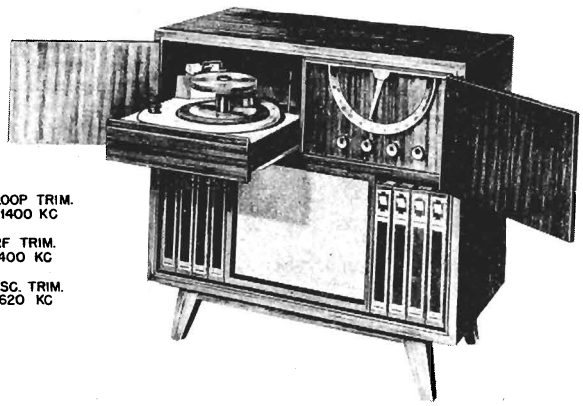

PHONOGRAPH - Model RC-37, three-speed: 33, 45 & 78 RPM. Refer to the RC-37 Service Manual for record changer service information.

©John F. Rider

Compliments of www.nucow.com

MODELS 7F11, 7F11B,
Ch. HS-265

SERVICE NOTES

TO REMOVE CHASSIS FROM CABINET:

1. Remove the screws from the cabinet back.
2. Disconnect the phono power lead, the phono pick-up lead, the speaker leads, the line cord, and the antenna loop leads.
3. Remove the pointer escutcheon by pulling it downward.
4. Turn the tuning knob counterclockwise until the pointer reaches the extreme low frequency end of the dial scale.
5. From the back of the cabinet, loosen the pointer adjustment setscrew (see Figure 2), and pull the pointer and shaft assembly from the chassis. CAUTION: Do not remove the nut from the front of the pointer, as the detent ball and spring will fall out and may become lost.
6. Pull off the control knobs.
7. Remove the three chassis mounting screws, from beneath the chassis.
8. Slide the chassis from the cabinet.

TO CALIBRATE DIAL:

1. Turn the tuning knob counterclockwise until the end of its travel is reached.
2. From the back of the cabinet, loosen the pointer adjustment setscrew (see Figure 2). CAUTION: Do not remove the nut from the front of the pointer.
3. Move the pointer until it is in a horizontal position (at the low frequency end of the dial scale.)
4. Tighten the adjustment setscrew.

NOTE: If the pointer is moved by hand accidentally, it will be released from a detent in the pointer collar, and no damage to the tuning mechanism will result. To reset the pointer, move it back and forth until it again engages in the detent.

ALIGNMENT

1. Connect a low range output meter across the speaker voice coil.
2. Connect an AM signal generator as in chart below.
3. Set the signal generator for 400 cycle, 30% modulation.
4. Rotate the PHONO-RADIO switch to the "RADIO" position.
5. Turn the receiver volume control to maximum.
6. Use a small fibre screwdriver for aligning the IF and diode transformers.
7. As stages are brought into alignment, reduce the signal generator output to a level which produces less than 1.27 volts (.5 watt) across the voice coil, to avoid overloading the receiver.
8. See Figure 3 for adjustment locations, and the following chart for procedure.

STEP	DUMMY ANTENNA	GENERATOR CONNECTION	GENERATOR FREQUENCY	GANG SETTING	ADJUST	REMARKS
IF ALIGNMENT						
1.	.1 mf	Grid of conv. V-2 (pin 7, 6BE6)	455 Kc	Fully opened	1, 2, 3, & 4 (IF cores)	Adjust for maximum.
RF ALIGNMENT						
2.	.1 mf	Grid of conv. V-2 (pin 7, 6BE6)	1620 Kc	Fully opened	5 (Osc)	Adjust for maximum.
3.	.1 mf	Grid of conv. V-2 (pin 7, 6BE6)	1400 Kc	Tune in signal	6 (RF)	Adjust for maximum.
4.	-	-	-	-	-	Connect BC loop to chassis.
5.	-	Across radiation loop*	1400 Kc	Tune in signal	7 (Ant)	Adjust for maximum.

* Connect generator output across 5" diameter, 5 turn loop and couple inductively to receiver loop. Keep loops at least 12" apart.

©John F. Rider

Compliments of www.nucow.com

MODELS 7F11,
7F11B, Ch. HS-265

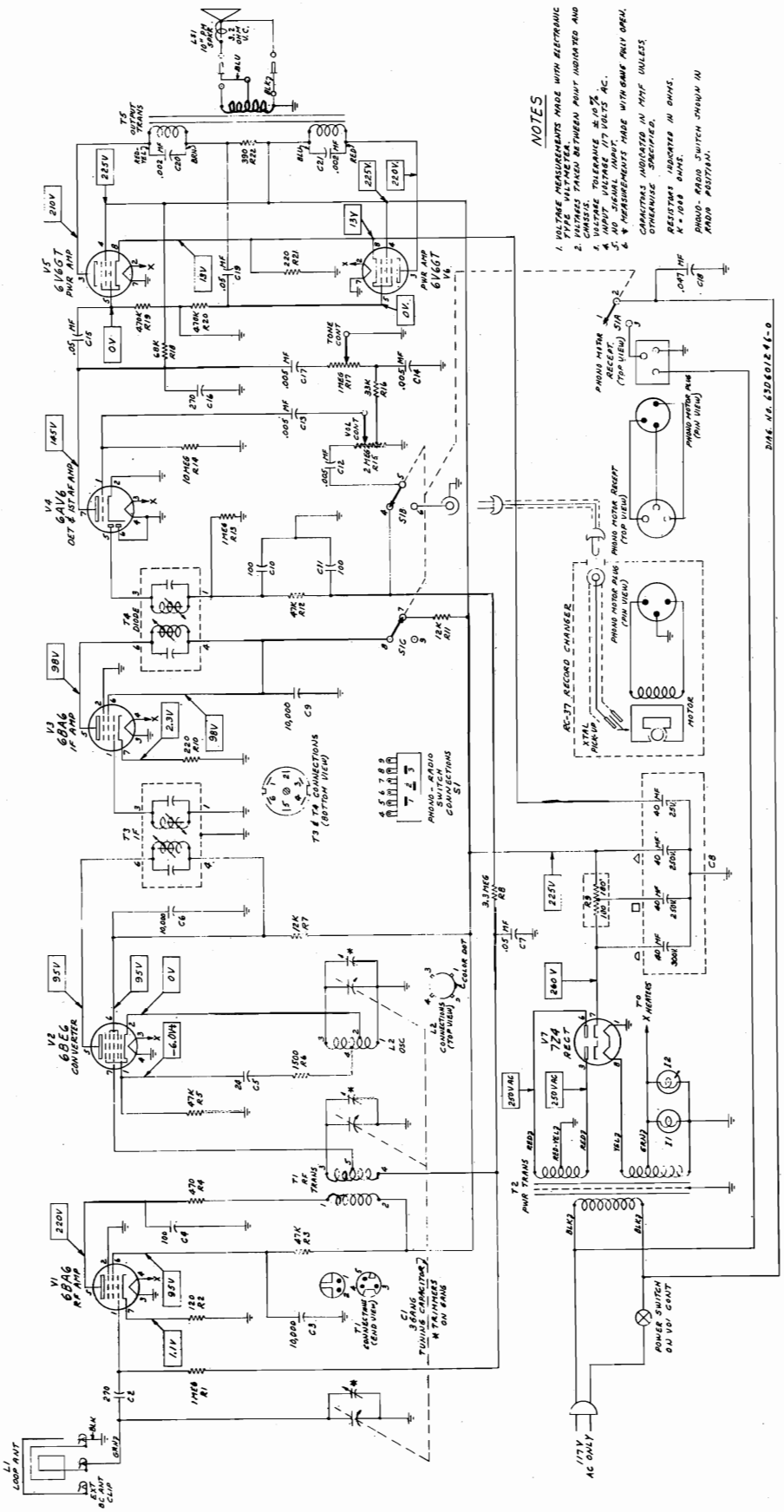

RECORD CHANGER: Model RC-37, Pages RCD.CH.21-17,18 through RCD.CH.21-29.

FIGURE 4. SCHEMATIC DIAGRAM

©John F. Rider

Compliments of www.nucow.com

MODELS 7F11, 7F11B,
Ch. HS-265

REPLACEMENT PARTS LIST

NOTE: When ordering parts, specify model number of set in addition to part number and description of part.

Ref. No.	Part No.	Description
CHASSIS PARTS - ELECTRICAL		
Capacitors		
C-1	19B690978	Variable, 3-gang .....
C-2	21K400037	Ceramic: 270 mmf 500V .....
C-3	21K482726	Ceramic, disc type: 10,000 mmf. 450V
C-4	21B77286	Ceramic: 100 mmf 500V .....
C-5	21R28816	Ceramic: 24 mmf 500V .....
C-6	21K482726	Ceramic, disc type: 10,000 mmf 450V
C-7	8R9816	Paper: .05 mf 400V .....
C-8	23B690975	Electrolytic: 40 mf/300V; 40-40 mf/ 250V; 40 mf/25V.....
C-9	21K482726	Ceramic, disc type: 10,000 mmf 450V
C-10	21B77286	Ceramic: 100 mmf 500V .....
C-11	21B77286	Ceramic: 100 mmf 500V .....
C-12	8R9813	Paper: .005 mf 600V .....
C-13	8R9813	Paper: .005 mf 600V .....
C-14	8R9813	Paper: .005 mf 600V .....
C-15	8R9816	Paper: .05 mf 400V .....
C-16	21K400037	Ceramic: 270 mmf 500V.....
C-17	8R9813	Paper: .005 mf 600V .....
C-18	8R490232	Tubular, molded: .047 mf 400V.....
C-19	8R9816	Paper: .05 mf 400V .....
C-20	8R9824	Paper: .002 mf 400V .....
C-21	8R9824	Paper: .002 mf 400V .....
Pilot Light		
I-1,2	65X10867	Bulb, pilot light: #44; 6-8V; .25 amp; clear; bayonet base .....
Coils		
L-1	24C690896	Loop antenna .....
L-2	24B690976	Oscillator coil .....
Speaker		
LS-1	50C601037	Speaker: 10" PM; 3.2 ohm VC ....
Resistors		
		Note: All resistors are insulated, carbon type unless otherwise specified.
R-1	6R6004	1 meg 20% 1/2W .....
R-2	6R5551	120 10% 1/2W .....
R-3	6R6056	47,000 20% 1/2W .....
R-4	6R3949	470 20% 1/2W .....
R-5	6R6056	47,000 20% 1/2W .....
R-6	6R6038	1500 10% 1/2W .....
R-7	6R5766	12,000 10% 2W .....
R-8	6R6497	3.3 meg 10% 1/2W .....
R-9	17A690973	Wire wound: 360 10% 3W; center-tapped .....
R-10	6R6270	220 10% 1/2W .....
R-11	6R5766	12,000 10% 2W .....
R-12	6R6056	47,000 20% 1/2W .....
R-13	6R6004	1 meg 20% 1/2W .....
R-14	6R2109	10 meg 20% 1/2W .....
R-15	18A600974	Volume control: 2 meg; tapped at 600,000 ohms; includes on-off sw
R-16	6R6410	33,000 10% 1/2W .....
R-17	18K77399	Tone control: 1 meg .....
R-18	6R6001	68,000 20% 1/2W .....
R-19	6R6032	470,000 20% 1/2W .....
R-20	6R6032	470,000 20% 1/2W .....
R-21	6R6389	220 10% 1W.....
R-22	6R5598	390 10% 1W .....
Switch		
S-1	40B601065	Switch, PHONO-RADIO .....

Ref. No.	Part No.	Description
Transformers		
T-1	24B690899	RF Transformer .....
T-2	25B691035	Power Transformer .....
T-3	24B482863	IF Transformer (brown dot): 455 kc; complete with capacitors and cores; less shield .....
T-4	24B482865	Diode Transformer (red dot): 455 kc; complete with capacitors and cores; less shield .....
T-5	25B690898	Audio Output Transformer .....
CHASSIS PARTS - MECHANICAL		
	7C690567	Bracket, gang mtg .....
	7A600965	Bracket, pilot light mtg .....
	7B600801	Bracket, pointer mtg .....
	1X600827	Bracket & Pulleys Assembly: includes four pulleys and shoulder rivets (cord guides on chassis front) .....
	7A77337	Bracket, tuning shaft .....
	43A890397	Bushing, line cord strain relief (use with 43K890398) .....
	43K890398	Bushing, line cord retainer (use with 43A890397) .....
	42B482867	Clip, spring: blued finish (holds IF transformers) .....
	11M8944	Cord, dial (pointer drive).....
	30K21859	Cord, line: with plug; 9 ft long .....
	4S9751	Lockwasher, int-ext: #8; cad pl (pointer and gang drive pulley mtg).....
	2S7051	Nut, hex palnut: 3/8-32 x 9/16; cad pl (control mtg) .....
	49A23960	Pulley, cord: 1/4" groove (on pulley bracket) .....
	49A21741	Pulley, cord: 3/8" groove (on pulley bracket) .....
	49A73807	Pulley, cord: 1/2" groove (on chassis side and on pulley bracket) .....
	49A26433	Pulley, cord: 21/32" groove (on pulley bracket) .....
	49A690559	Pulley, gang drive: 3-1/2" diameter ...
	49A690558	Pulley, pointer drive: 1-1/4" diameter.
	9K592170	Receptacle, phono pick-up: 1-prong ....
	9A27674	Receptacle, phono power: 3-prong .....
	5S7771	Rivet: .088 x 3/16 stl; nkl pl (min and midget tube socket mtg).....
	5S7707	Rivet: .122 x 5/32 stl; nkl pl (loctal tube socket, terminal strip, output trans mtg) .....
	5S7701	Rivet: .122 x 3/16 stl; nkl pl (power receptacle and tuning shaft brkt mtg) .....
	5S7700	Rivet: .122 x 1/4 stl; nkl pl (octal tube socket mtg) .....
	5K71735	Rivet, shoulder (mounts 21/32" and 3/8" pulleys to bracket) .....
	5K13896	Rivet, shoulder (mounts 1/2" and 1/4" pulleys to bracket) .....
	3S7326	Screw, machine: 8-32 x 3/16 plain locking hex head; cad pl (gang mtg).....
	3S7163	Screw, machine: 8-32 x 1/4 plain hex head; cad pl (pointer & gang drive pulleys mtg) .....
	3S2695	Screw, sheet metal: #6 x 3/16 PKZ plain hex head; cad pl (holds gang mtg brkt) .....
	3S7506	Screw, sheet metal: #6 x 1/4 PKZ plain hex head; cad pl (holds pointer mtg brkt) .....
	3S7454	Screw, sheet metal: #8 x 1/4 PKZ plain hex head; cad pl (pilot light brkt mtg) .....
	3S7475	Screw, sheet metal: #8 x 1/4 PKZ slotted acorn head; cad pl (power trans mtg) .....

©John F. Rider

Compliments of www.nucow.com

MODELS 7F11, 7F11B,
Ch. HS-265

Part Number	Description
3S7462	Screw, thread cutting: 6-32 x 3/16 plain hex head; cad pl (electrostatic shield mtg)
3S7103	Setscrew: 8-32 x 1/8 Allen head; cad pl (pointer mtg)
1K601085	Shaft and Pulley Assembly, pointer mtg
1X691134	Shaft, tuning: complete with pulley
26K485936	Shield, coil (for IF transformers)
26K690984	Shield, electrostatic (gang shield)
26A692080	Shield, tube (for V-7): includes 41K692081 spring
9K600968	Socket, pilot light
9K484167	Socket, tube: miniature; 7-prong
9A76209	Socket, tube: octal
9A690129	Socket, tube: midget; 7-prong (for V-1)
9A72519	Socket, tube: loctal
41A14244	Spring, tension (pointer drive cord)
41K692081	Spring, tube shield retaining (for V-7 shield)
31K37504	Strip, terminal: 1 insulated lug, #1 mtg; 3/8" spacing
31K51511	Strip, terminal: 3 insulated lugs, #3 gnd; 3/8" spacing
31K90046	Strip, terminal: 5 insulated lugs, #4 gnd; 3/8" spacing
29A76280	Terminal, pin (on speaker leads)
4A70015	Washer, "C" (tuning shaft retainer)
4A21941	Washer, "C" (holds pointer mtg shaft & pulley)
4S7582	Washer, flat: 1/2 x .195 x .033 stl; cad pl (pointer & gang drive pulleys mtg)
4A691006	Washer, flat: double "D" (pointer & gang drive pulleys mtg)

MODEL 7F11 CABINET PARTS

Part Number	Description
43A4326	Ball, steel: 1/8" dia (pointer detent)
38K691915	Button, plug (on record changer)
16F600641	Cabinet, console: red-brown mahogany; complete, less pointer escutcheon and dial scale
55K482159	Catch, bullet: statuary bronze finish (door latch on cabinet)
42A470832	Clamp, cable: plastic (holds line cord)
42K600645	Clip, pointer escutcheon
43K600637	Cloth, grille: 13 3/8 x 15 1/2 ; mahogany
15D600648	Cover, cabinet back
34K601066	Dial, scale
34K600817	Escutcheon, pointer
5S7870	Eyelet: brass (on R. C. drawer panel-holds extra spindle)
5A71081	Eyelet, chassis mtg: plain; 9/32" long
5A600963	Eyelet, chassis mtg: pierced; 1/8" long
5A71092	Grommet, chassis mtg: rubber
55K600643	Handle, door: polished brass
55K600646	Hinge, door: bronze finish (lower hinges pair
55K600639	Hinge, door (stop type): bronze finish (upper hinges) pair
14K791482	Insulator, fibre (clamps phono leads).
36C601041	Knob control (VOL-ON-OFF): walnut-mahogany
36K601043	Knob, control (TONE): walnut-mahogany
1X600852	Lead and Plugs Assembly, phono-pick-up (shielded lead with two phono pick-up plugs)
4S7657	Lockwasher, ext: #8; cad pl (spkr mtg)
2S7005	Nut, hex: 6-32 x 1/4 stl; cad pl (pointer mtg)
2S7003	Nut, hex: 8-32 x 5/16; cad pl (spkr mtg)
36K601042	Knob, control (PHONO-RADIO): walnut mahogany
36K601045	Knob, control (TUNING): walnut-mahogany
62K70581	Overlay, logotype: "Motorola"; gold lacquer finish
35K691051	Pad, felt: 1/2" diameter (door stop)
64K600867	Panel, record changer bottom: chipboard.
1X600851	Pointer and Collar Assembly (less shaft and sleeve)
28A27573	Plug, phono motor: 3-pin; includes shell (on phono motor lead)
28K71775	Plug, phono pick-up
9A600040	Receptacle, phono motor: 3- prong; includes sheel (on phono motor lead)
3K489169	Screw, machine: 8-32 x 1 cross slot head; statuary bronze finish (door handle mtg)
3S7536	Screw, sheet metal: #6 x 3/8 PKA slotted acron head; antique copper finish (back cover mtg)
3S3387	Screw, sheet metal: #6 x 1/2 PKA plain hex head; statuary bronze finish (cable clamp mtg)
3K653	Screw, speaker mtg) 3-32 x 1-1/4"; copper oxide finish
3S1334	Screw, wood: #6 x 1 flat head statuary bronze finish (door hinge mtg)
1A690738	Shaft and Sleeve Assembly, pointer less detent spring and ball, and pointer
15A690616	Shell, receptacle (on phono motor receptacle)
15K74442	Shell, receptacle (on phono motor plug).
55K600171	Slide, record changer: left-hand (on side of RC drawer)
55K600172	Slide, record changer: right-hand (on side of RC drawer)
2S400199	Speednut: for .050 stud (dial scale mtg)
41A690732	Spring, compression (pointer detent)
55K482160	Strike & nail: statuary bronze finish (door latch - on door)
4S1765	Washer, flat: 1/2 x .147 x .015 stl; cad pl (pointer mtg)
4S7629	Washer, flat: 1/2 x 3/16 x .048 stl; cad pl (spkr mtg)
4S8214	Washer, flat: 7/8 x .203 x .067 stl; cad pl
4A690729	Washer, spring (pointer mtg)

MODEL 7F11B CABINET PARTS - Same as 7F11 except:

Part Number	Description
16K600642	Cabinet, console: blonde; complete less pointer escutcheon and dial scale
55K482794	Catch, bullet: brass (door latch on cabinet)
43K600638	Cloth, grille: 13 3/8 x 15 1/2; eggshell & brown
55K600647	Hinge, door: brushed brass finish (lower hinges) pair
55K600644	Hinge, door (stop type): brushed brass finish (upper hinges) pair
36K601046	Knob, control (VOL-ON-OFF): tan
36K601048	Knob, control (TONE): tan
36K601047	Knob, control (PHONO-RADIO): tan
36K601051	Knob, control (TUNING): tan
3K489170	Screw, machine: 8-32 x 1 cross slot head; brass (door handle mtg)
55K482795	Strike & Nail: brass (door latch on door)

©John F. Rider

Compliments of www.nucow.com

MODELS 8FM21,
8FM21B, Ch. HS-247

GENERAL INFORMATION

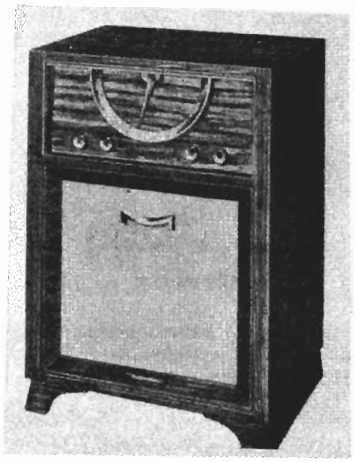

TYPE - FM-AM Radio Phonograph Combination

RECEIVER MODELS -

Model	Color
8FM21	Red-brown mahogany
8FM21B	Blonde

TUNING RANGE - AM 535 to 1620 Kc AM IF - 455 Kc
FM 88 to 108 Mc FM IF - 10.7 Mc

TUBE COMPLEMENT - 6BA6 - FM-AM RF Amplifier
6BA7 - FM-AM Converter
6BA6 - FM-AM IF Amplifier
6BA6 - FM IF Amplifier
6AL5 - FM Ratio Detector
6AV6 - AM Det & 1st Audio Amp
6K6GT - Power Amplifier
5Y3GT - Rectifier

POWER SUPPLY - 117 volts, 60 cycles AC only; 85 watts, including phono motor

PHONOGRAPH - Model RC-37, three-speed: 33, 45 & 78 RPM. Refer to the RC-37 Service Manual for record changer service information.

INSTALLATION & OPERATING INSTRUCTIONS

ANTENNAS

No outside antenna or ground is normally required for standard broadcast (AM) reception, as a loop antenna is located inside the cabinet. Antenna connections are shown in Figure 1. In locations where additional pick-up is desired, an external antenna may be connected to the clip marked "EXT BC ANT" on the loop antenna.

An FM antenna, built into the power cord, eliminates the need for an external FM antenna when the receiver is used in normal FM service areas, such as are found in and for a few miles around metropolitan areas. In "fringe" or weak signal areas, improved FM reception can be obtained by using an outside FM antenna. The external antenna should be connected through a 300 ohm twin transmission line to the 1st and 2nd screws on the terminal strip on the chassis, as in Figure 1. The link between the 2nd and 3rd screws should be opened. Orient the antenna to obtain maximum volume of the FM stations.

For best FM reception from the built-in power line cord antenna, it is important to stretch the cord to its full length. Changing the direction or position of the line cord, or reversing the plug in the wall outlet, will often improve reception from weak stations. Connect the link between the 2nd and 3rd screws on the terminal strip on the chassis when the built-in antenna is used.

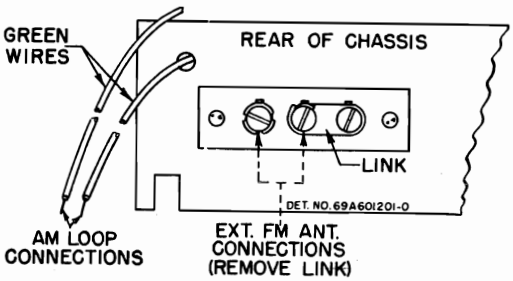

FIGURE 1. ANTENNA CONNECTIONS

CONTROLS

Refer to Figure 2 for the locations of the radio operating controls.

Power for both the radio and the record changer is controlled by the VOL-ON-OFF knob.

The phonograph motor will not operate, however, until the PHONO-TONE-RADIO knob is rotated also to "PHONO".

Tuning of FM stations should be done very carefully, for best sound reproduction, not necessarily for the strongest volume received.

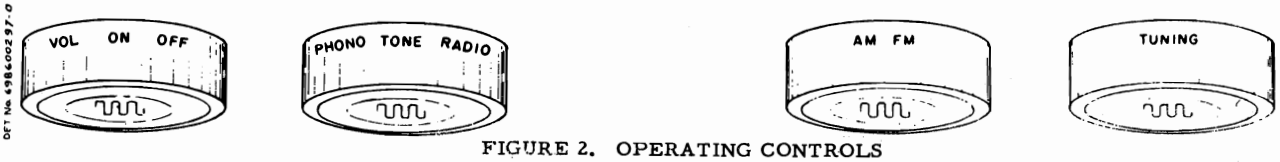

FIGURE 2. OPERATING CONTROLS

©John F. Rider

Compliments of www.nucow.com

MODELS 8FM21,
8FM21B, Ch. HS-247

ALIGNMENT

GENERAL INFORMATION

1. Maximum performance can be obtained only if extreme care is exercised during alignment.

2. Use a small fibre screwdriver for aligning the IF transformers.

3. Refer to Figure 4 for the location of all alignment trimmers and cores.

4. As the stages are brought into alignment, reduce the signal generator output to a low value to avoid overloading the receiver.

ORDER OF ALIGNMENT AND EQUIPMENT REQUIRED

1. AM Broadcast Band IF & RF Alignment
   a. 455 to 1620 Kc AM signal generator
   b. Low range output meter.

2(A) FM Band IF & RF Alignment (preferred method)
   a. 10.7 to 108 Mc FM signal generator
   b. Oscilloscope

(B) FM Band IF & RF Alignment (alternate method)
   a. 10.7 to 108 Mc signal generator (unmodulated)
   b. Low range DC electronic voltmeter

AM BROADCAST BAND - IF&RF ALIGNMENT

1. Connect the AM signal generator as in chart below, with 400 cycle, 30% modulation.

2. Connect the output meter across the speaker voice coil. Throughout alignment, reduce the generator output to a level which produces less than 1.27 volts (.5 watt) across the voice coil to avoid overloading the receiver.

3. Set the bandswitch to the AM position.

4. Turn the receiver volume control to maximum.

5. Proceed as shown in the following chart.

STEP	DUMMY ANTENNA	GENERATOR CONNECTION	GENERATOR FREQUENCY	GANG SETTING	ADJUST	REMARKS
IF ALIGNMENT						
1.	.1 mf	Grid of conv. V-2 (pin 7, 6BA7)	455 Kc	Fully opened	1, 2, 3 & 4 (IF cores)	Adjust for maximum.
RF ALIGNMENT						
2.	.1 mf	Grid of conv. V-2(pin 7, 6BA7)	1620 Kc	Fully opened	5 (AM Osc)	Adjust for maximum.*
3.	-	-	-	-	-	Connect AM loop to chassis.
4.	-	Across radiation loop**	1400 Kc	Tune in signal	8 (AM Ant)	Adjust for maximum.

5. If, after the receiver has been aligned as above, it is found to be badly off calibration, it will be necessary to adjust oscillator core (7) as follows: connect the generator to the grid of the converter tube and, with the gang fully closed, adjust core (7) at 535 kc. It is advisable to repeat the oscillator adjustments at 1620 kc and 535 kc several times until the tuning range is correct. Core (7) has been pre-set at the factory and normally should require no retuning.

* If difficulty is encountered in tuning trimmer (5), adjust trimmer (6) to 1/2 turn from tight.

** Connect generator output across 5" diameter, 5 turn loop and couple inductively to receiver loop. Keep loops at least 12" apart.

FM BAND - IF & RF ALIGNMENT (PREFERRED METHOD)

1. The following FM alignment procedure, using an FM signal generator and an oscilloscope, is to be preferred because the actual response pattern may be observed on the scope and adjusted for best symmetry and maximum amplitude.

2. Connect the vertical input terminals of the oscilloscope between the chassis and the junction of resistor R-18 (47K) and capacitor C-23 (1000 mmf).

3. Connect the FM signal generator sync voltage output terminals, through a phase shifting network, to the horizontal input terminals of the scope, as in Figure 5. (Other values of resistance and capacitance may be required, depending upon the scope). The phasing control should be adjusted to give only one trace on the scope. NOTE: If the FM generator has a built-in phase control, the phase shifting network is not necessary.

4. Set the bandswitch to the FM position.

5. Throughout alignment, reduce the generator output to keep the signal just above the noise level, to avoid

©John F. Rider

Compliments of www.nucow.com

MODELS 8FM21,
8FM21B, Ch. HS-247

SERVICE NOTES

TO REMOVE CHASSIS FROM CABINET:

1. Remove the screws from the cabinet back.
2. Disconnect the phono power lead, the phono pick-up lead, the speaker leads, the line cord, and the antenna loop leads.
3. Remove the pointer escutcheon by pulling it downward.
4. Turn the tuning knob counterclockwise until the pointer reaches the extreme low frequency end of the dial scale.
5. From the back of the cabinet, loosen the pointer adjustment setscrew (see Figure 3) and pull the pointer and shaft assembly from the chassis. CAUTION: Do not remove the nut from the front of the pointer, as the detent ball and spring will fall out, and may become lost.
6. Pull off the control knobs.
7. Remove the three chassis mounting screws, from beneath the chassis.
8. Slide the chassis from the cabinet.

TO CALIBRATE DIAL:

1. Turn the tuning knob counterclockwise until the end of its travel is reached.
2. From the back of the cabinet, loosen the pointer adjustment setscrew (see Figure 3). CAUTION: Do not remove the nut from the front of the pointer.
3. Move the pointer until it is in a horizontal position (at the low frequency end of the dial scale).
4. Tighten the adjustment setscrew.

NOTE: If the pointer is moved by hand accidentally, it will be released from a detent in the pointer collar, and no damage to the tuning mechanism will result. To reset the pointer, move it back and forth until it again engages in the detent.

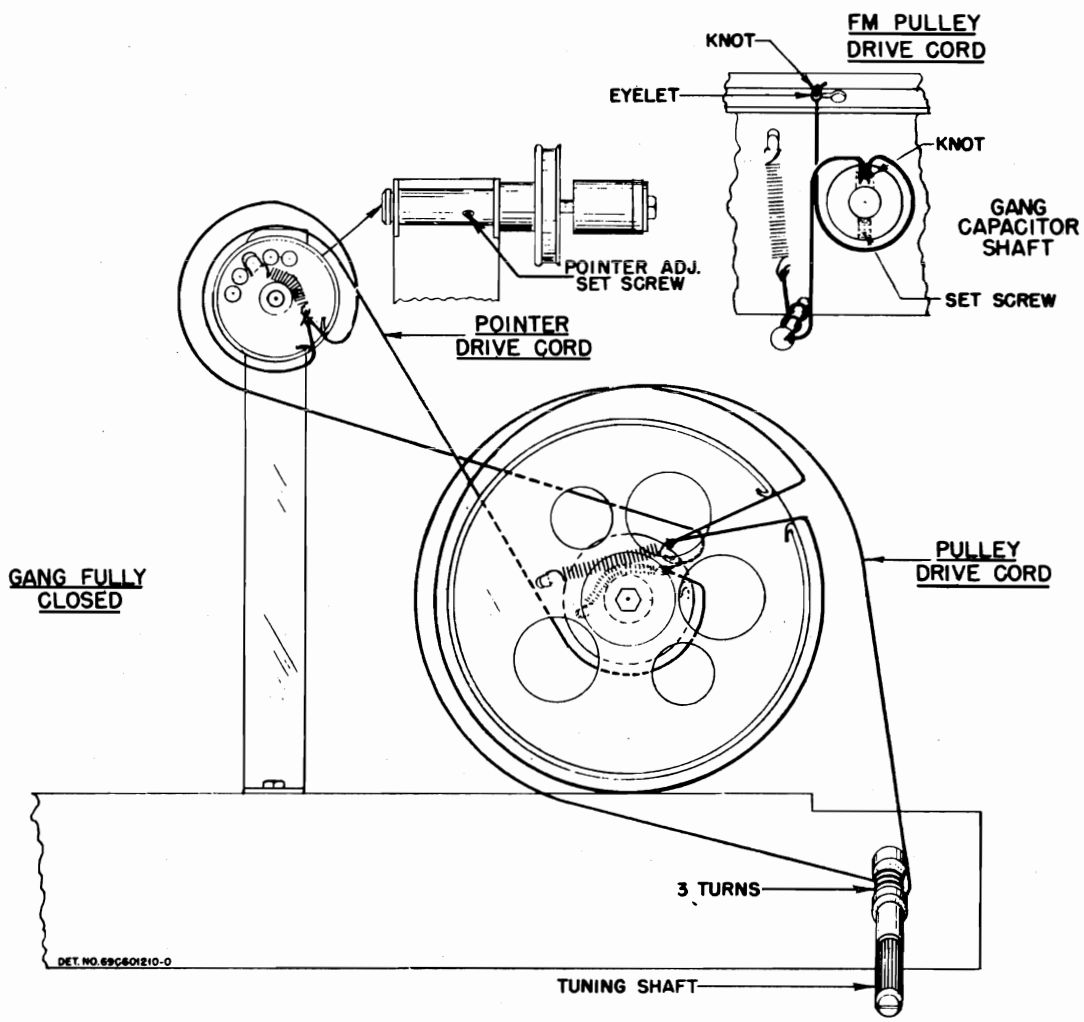

FIGURE 3. POINTER AND DRIVE CORD RESTRINGING DETAIL

©John F. Rider

Compliments of www.nucow.com

MODELS 8FM21,
8FM21B, Ch. HS-247

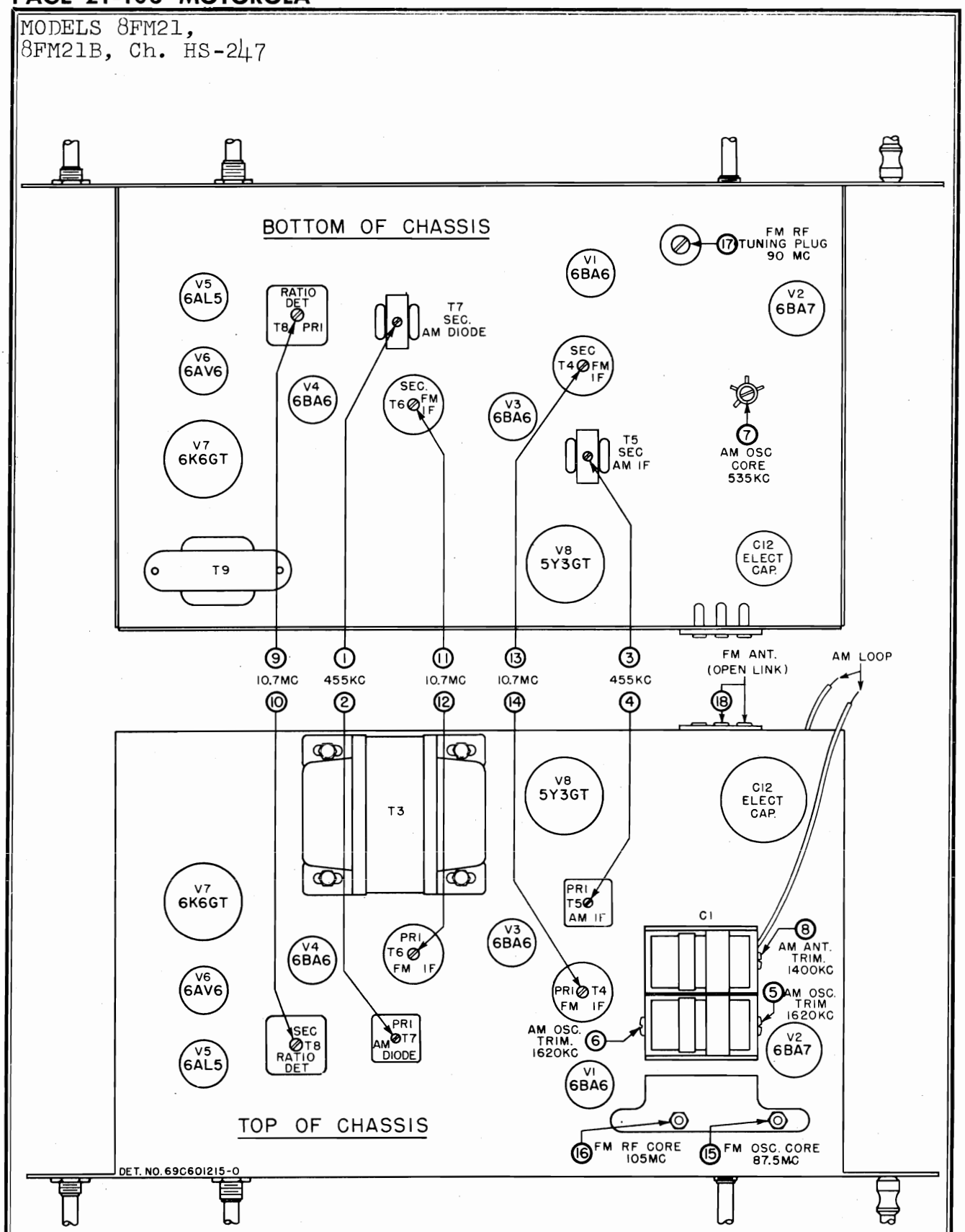

FIGURE 4. TUBE AND TRIMMER LOCATIONS

©John F. Rider

Compliments of www.nucow.com

MODELS 8FM21,
8FM21B, Ch. HS-247

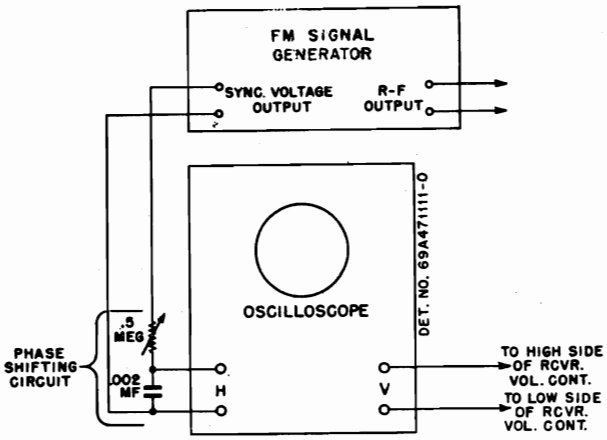

FIGURE 5.
FM SIGNAL GENERATOR & OSCILLOSCOPE HOOK-UP

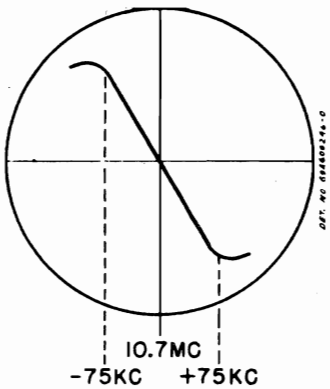

FIGURE 6. RATIO DETECTOR WAVEFORM

overloading the receiver.

6. Proceed as shown in the following chart.

STEP	DUMMY ANTENNA	GENERATOR CONNECTION	GENERATOR FREQUENCY	TUNER SETTING	ADJUST	REMARKS
IF ALIGNMENT						
1.	1000 mmf	Grid of 2nd IF Amp V-4 (pin 1, 6BA6)	10.7 mc ±100 kc dev	Fully opened	9 (ratio det pri)	Adjust for maximum amplitude of pattern.*
2.	1000 mmf	Grid of 2nd IF Amp V-4 (pin 1, 6BA6)	10.7 mc ±100 kc dev	Fully opened	10 (ratio det sec)	Adjust for symmetrical curve, as shown in Figure 6.
3.	-	-	-	-	-	Repeat steps 1 & 2 for maximum amplitude and best symmetry.
4.	1000 mmf	Grid of 1st IF Amp V-3 (pin 1, 6BA6)	10.7 mc ±100 kc dev	Fully opened	11 & 12 (2nd IF sec & pri)	Adjust for maximum amplitude of pattern.*
5.	1000 mmf	Grid of conv. V-2 (pin 7, 6BA7)	10.7 mc ±100 kc dev	Fully opened	13 & 14 (1st IF sec & pri)	Adjust for maximum amplitude of pattern.*
6.	1000 mmf	Grid of conv. V-2 (pin 7, 6BA7)	10.7 mc ±100 kc dev	Fully opened	11, 12, 13 & 14	Readjust for maximum amplitude and best symmetry.
RF ALIGNMENT						
7.	270 ohms	FM terminal 18 on rear of chassis (open link)	87.5 mc ±22-1/2 kc dev	Fully closed	15 (osc core)	Adjust for maximum amplitude of pattern.*
8.	-	-	-	Fully closed	16 (RF core)	Turn counterclockwise until core is at bottom of pipe, then turn four turns clockwise.
9.	270 ohms	FM terminal 18 on rear of chassis	90 mc ±22-1/2 kc dev	Tune in signal	17 (RF tuning plug)	Adjust for maximum amplitude of pattern.*
10.	270 ohms	FM terminal 18 on rear of chassis	105 mc ±22-1/2 kc dev	Tune in signal	16 (RF core)	Adjust for maximum amplitude of pattern.*
11.	-	-	-	-	-	Repeat steps 9 & 10, until no further adjustment is necessary.

*An output meter across the speaker voice coil will also indicate maximum amplitude. It should not be used in place of the scope, however, since it will not show symmetry of the curve.

©John F. Rider

Compliments of www.nucow.com

FM BAND - IF & RF ALIGNMENT (ALTERNATE METHOD)

1. The following procedure for FM alignment, with an unmodulated carrier generator and a DC electronic voltmeter, is not as desirable as the preceding method; but it may be used if no FM generator is available.

2. Connect the signal generator as in chart below, with no modulation.

3. Set the bandswitch to the FM position.

4. Except in step 2 below, connect the electronic voltmeter across resistor R-19 (33K) in the ratio detector stage.

5. Throughout alignment reduce the signal generator output to a value which produces no more than a 5 volt rise above no signal voltage, to avoid overloading the receiver.

6. In step 2 below, connect two 100K ohm resistors in series across R-19. Connect the electronic voltmeter between the volume control side of resistor R-18 (47K) and the junction of the two 100K resistors, with the low side of the meter at the 100K resistors.

7. Proceed as shown in the following chart.

STEP	DUMMY ANTENNA	GENERATOR CONNECTION	GENERATOR FREQUENCY	TUNER SETTING	ADJUST	REMARKS
IF ALIGNMENT						
1.	1000 mmf	Grid of conv. V-2 (pin 7, 6BA7)	10.7 mc	Fully opened	9, 11, 12, 13 & 14 (IF cores)	Adjust for maximum.
2.	1000 mmf	Grid of conv. V-2 (pin 7, 6BA7)	10.7 mc	Fully opened	10 (ratio det sec)	Adjust for zero (connect meter as in step 6 above.)
RF ALIGNMENT						
3.	270 ohms	FM terminal 18 on rear of chassis (open link)	87.5 mc	Fully closed	15 (osc core)	Adjust for maximum.
4.	-	-	-	Fully closed	16 (RF core)	Turn counterclockwise until core is at bottom of pipe, then turn four turns clockwise.
5.	270 ohms	FM terminal 18 on rear of chassis	90 mc	Tune in signal	17 (RF tuning plug)	Adjust for maximum.
6.	270 ohms	FM terminal 18 on rear of chassis	105 mc	Tune in signal	16 (RF core)	Adjust for maximum.
7.	-	-	-	-	-	Repeat steps 5 & 6 until no further adjustment is necessary.

©John F. Rider
Compliments of www.nucow.com

MODELS 8FM21,
8FM21B, Ch. HS-247

RECORD CHANGER: Model RC-37, Pages RCD.CH.21-17,18
through RCD.CH.21-29.

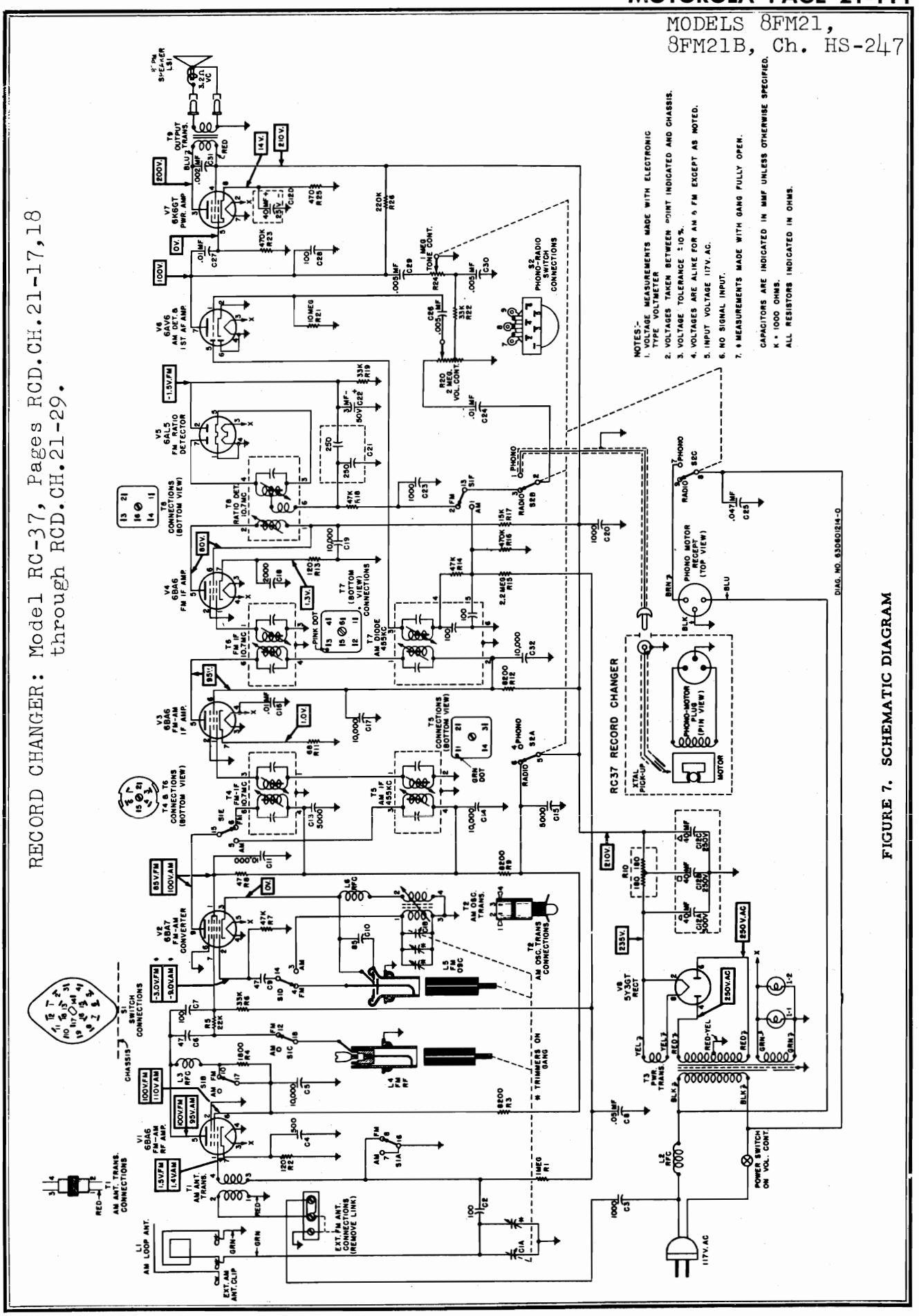

FIGURE 7. SCHEMATIC DIAGRAM

©John F. Rider

Compliments of www.nucow.com

MODELS 8FM21,
8FM21B, Ch. HS-247

REPLACEMENT PARTS LIST

NOTE: When ordering parts, specify model number of set in addition to part number and description of part.

Ref. No.	Part No.	Description
		CHASSIS PARTS - ELECTRICAL
		Capacitors
C-1	19B691877	Variable, 2-gang .....
C-2	21B77286	Ceramic: 100 mmf 500V .....
C-3	21K478410	Ceramic: 1000 mmf 500V .....
C-4	21K481377	Ceramic: 500 mmf 500V .....
C-5	21K482726	Ceramic, disc type: 10,000 mmf 450V
C-6	21K77373	Ceramic: 47 mmf 500V .....
C-7	21B77286	Ceramic: 100 mmf 500V .....
C-8	8R9816	Paper: .05 mf 400V .....
C-9	21K77373	Ceramic: 47 mmf 500V .....
C-10	21A690688	Ceramic: 85 mmf 500V .....
C-11	21K482726	Ceramic, disc type: 10,000 mmf 450V
C-12	23B690975	Electrolytic: 40 mf/300V, 40-40 mf/250V, 40 mf/25V .....
C-13	21A470789	Ceramic, disc type: 5000 mmf 450V.
C-14	21K482726	Ceramic, disc type: 10,000 mmf 450V
C-15	21A470789	Ceramic, disc type: 5000 mmf 450V..
C-16	8R9809	Paper: .01 mf 400V .....
C-17	21K482726	Ceramic, disc type: 10,000 mmf 450V
C-18	21K790912	Ceramic: 2000 mmf 500V .....
C-19	21K482726	Ceramic, disc type: 10,000 mmf 450V
C-20	21K478410	Ceramic: 1000 mmf 500V .....
C-21	21B484337	Ceramic: dual; 250-250 mmf/450V.....
C-22	23K690543	Electrolytic: 3 mf 50V .....
C-23	21K478410	Ceramic: 1000 mmf 500V .....
C-24	8R9809	Paper: .01 mf 400V .....
C-25	8R490232	Tubular, molded: .047 mf 400V.....
C-26	8R9813	Paper: .005 mf 600V .....
C-27	8R9809	Paper: .01 mf 400V .....
C-28	21B77286	Ceramic: 100 mmf 500V .....
C-29	8R9813	Paper: .005 mf 600V .....
C-30	8R9813	Paper: .005 mf 600V .....
C-31	8R9847	Paper: .002 mmf 600V .....
C-32	21K482726	Ceramic, disc type: 10,000 mmf 450V
		Pilot Light
I-1,2	65X10867	Bulb, pilot light: #44; 6-8V; .25 amp; clear; bayonet base .....
		Coils
L-1	24C690896	AM Loop Antenna .....
L-2	24A692148	RF Choke .....
L-3	24A90064	RF Choke .....
L-4	24C690584	Inductor and Capacitor Assembly: FM RF; less tuning core .....
L-5	24K600519	Inductor and Capacitor Assembly: FM osc; less tuning core .....
L-6	24A791081	RF Choke .....
		Speaker
LS-1	50C601038	Speaker: 8" PM; 3.2 ohm VC ..... exch
		Resistors
		Note: All resistors are insulated carbon type unless otherwise specified.
R-1	6R6004	1 meg 20% 1/2W .....
R-2	6R5551	120 10% 1/2W .....
R-3	6R5725	8200 10% 2W .....
R-4	6R2089	1800 10% 1/2W .....
R-5	6R6028	22,000 20% 1/2W.....
R-6	6R6410	33,000 10% 1/2W.....
R-7	6R6056	47,000 20% 1/2W .....
R-8	6R2108	47 20% 1/2W .....
R-9	6R5725	8200 10% 2W .....
R-10	17A690973	Wire wound: 360 10% 3W; center-tapped .....
R-11	6R2039	68 10% 1/2W .....
R-12	6R5725	8200 10% 2W .....
R-13	6R5551	120 10% 1/2W .....
R-14	6R6056	47,000 20% 1/2W .....
R-15	6R3927	2.2 meg 20% 1/2W .....
R-16	6R6377	470,000 10% 1/2W .....
R-17	6R5732	15,000 10% 2W .....
R-18	6R6056	47,000 20% 1/2W .....
R-19	6R6410	33,000 10% 1/2W.....
R-20	18A600974	Volume control: 2 meg; tapped at 600,000 ohms; includes on-off sw
R-21	6R2109	10 meg 20% 1/2W .....
R-22	6R6410	33,000 10% 1/2W .....
R-23	6R6032	470,000 20% 1/2W .....
R-24	18B600683	Tone control: 1 meg; with phono-radio switch .....
R-25	6R5593	470 10% 1W .....
R-26	6R6015	220,000 20% 1/2W .....
		Switches
S-1	40B690538	Bandswitch, AM-FM .....
S-2	-	Phono-radio switch (on tone control)
		Transformers
T-1	24A690544	FM Antenna Input Transformer .....
T-2	24K691878	AM Oscillator Transformer: white & red dot .....
T-3	25B600684	Power Transformer .....
T-4	24B690540	1st FM IF Transformer (orange dot): 10.7 mc; complete with capacitors and cores; less shield .....
T-5	24B485553	AM IF Transformer (green dot): 455 kc; complete with capacitors, cores, and shield .....
T-6	24B690541	2nd FM IF Transformer (yellow dot): 10.7 mc; complete with capacitors and cores; less shield .....
T-7	24K485555	AM Diode Transformer (pink dot): 455 kc; complete with capacitors, cores, and shield .....
T-8	24K600893	Ratio Detector Transformer: 10.7 mc; complete with capacitors, cores and shield .....
T-9	25B600969	Audio Output Transformer .....

Part Number	Description
	CHASSIS PARTS - MECHANICAL
1X690717	Bracket Assembly, tuning core mtg: includes shoulder rivet and anti-backlash clip...
7A600965	Bracket, pilot light mtg .....
7B600801	Bracket, pointer mtg .....
7C690567	Bracket, tuner mtg (gang mtg) .....
7A77337	Bracket, tuning shaft .....
43A890397	Bushing, line cord strain relief (use with 43K890398) .....
43K890398	Bushing, line cord retainer (use with 43A890397) .....
42K690561	Clip, anti-backlash: single (on core mtg bracket) .....
42A690560	Clip, anti-backlash: double (on tuner mtg brkt) .....

©John F. Rider

Compliments of www.nucow.com

MODELS 8FM21,
8FM21B, Ch. HS-247

Part Number	Description
42A485548	Clip, coil can mtg (AM IF transformer)
42B482867	Clip, spring: blued finish (holds FM IF transformer)
11M8944	Cord, dial (pointer drive)
11M488137	Cord, dial (core drive)
30K21859	Cord, line: with plug; 9 ft long
46B692164	Core, iron and screw: green dot (FM osc tuning core)
46K692165	Core, iron and screw (FM RF tuning core)
15A600877	Cover, volume control: with insulator
5S7866	Eyelet: .125 x .091 brass; nkl pl (core drive cord retainer)
1X600495	Lead and Plug Assembly, phono pick-up
4S9751	Lockwasher, int-ext: #8; cad pl (pointer drive pulley mtg)
2S7019	Nut, hex: 4-40 x 1/4; cad pl (FM tuning core mtg)
2S7051	Nut, hex palnut: 3/8-32 x 9/16; cad pl (control mtg)
35K691846	Pad, rubber: 1-hole (gang mtg)
35A691845	Pad, rubber: 2-hole (gang mtg)
28K71775	Plug, phono pick-up
1X600828	Pulley Assembly, pointer & gang drive (includes 3-1/2" & 1-1/4" pulleys)
49A690562	Pulley, core drive: brass
9A600040	Receptacle, phono motor: 3-prong; includes shell
5S8497	Rivet: .088 x 1/8 stl; nkl pl (anti-backlash clip mtg)
5S7771	Rivet: .088 x 3/16 stl; nkl pl (min socket mtg)
5S7774	Rivet: .088 x 1/4 stl; nkl pl (noval socket mtg)
5S7707	Rivet: .122 x 5/32 stl; nkl pl (term strip mtg)
5S7701	Rivet: .122 x 3/16 stl; nkl pl (ant term strip mtg)
5S7700	Rivet: .122 x 1/4 stl; nkl pl (octal socket mtg)
5K13896	Rivet, shoulder (on core mtg brkt)
3S7163	Screw, machine: 8-32 x 1/4 plain hex head; cad pl (pointer drive pulley mtg).
3S7205	Screw, machine: 8-32 x 1/4 slotted locking hex head; cad pl (gang mtg)
3S2695	Screw, sheet metal: #6 x 3/16 PKZ plain hex head; cad pl (tuner brkt mtg)
3S7454	Screw, sheet metal: #8 x 1/4 PKZ plain hex head; cad pl (pwr trans & pointer brkt mtg)
3S7103	Setscrew: 8-32 x 1/8 Allen head; cad pl (core drive pulley & pointer mtg)
1K601085	Shaft and Pulley Assembly, pointer mtg
1X600489	Shaft, tuning: complete with pulley
15A690616	Shell, receptacle (on phono motor receptacle)
26K485936	Shield, coil (for FM IF transformers)
9K600968	Socket, pilot light
9K484167	Socket, tube: miniature; 7-prong
9A485495	Socket, tube: noval; 9-prong
9A76209	Socket, tube: octal
41A690598	Spring, coil: 7 turns; cosmoline dipped (FM RF core mtg)
41K691840	Spring, coil: 8 turns; cop pl (FM osc core mtg)
41A14244	Spring, tension (core & pointer drive cord)
31K37504	Strip, terminal: 1 insulated lug; #1 mtg; 3/8" spacing
31K76184	Strip, terminal: 2 insulated lugs; #1 gnd; 3/8" spacing
31K26235	Strip, terminal: 3 insulated lugs; #1 gnd; 3/8" spacing
31K26658	Strip, terminal: 5 insulated lugs; #3 gnd; 3/8" spacing
31A470403	Strip, terminal: 3-screw (antenna input).

Part Number	Description
5S5405	Terminal, pin (on speaker leads)
4A70015	Washer, "C" (tuning shaft mtg)
4A21941	Washer, "C" (holds pointer mtg shaft & pulley)
4A600676	Washer, dog (AM-FM switch mtg)
4S7582	Washer, flat: 1/2 x .195 x .033 stl; cad pl (pointer drive pulley mtg)

MODEL 8FM21 CABINET PARTS

43A4326	Ball, steel: 1/8" diameter (pointer detent)
38K691915	Button, plug (on record changer)
16F600649	Cabinet, console: red-brown mahogany; complete less pointer escutcheon and dial scale
13K600651	Cloth, grille: 17-1/2" x 18-1/4"; mahogany
15C600874	Cover, cabinet back
34D600819	Dial scale
34K600817	Escutcheon, pointer
5S7870	Eyelet: brass (on RC drawer panel-holds extra spindle)
5A71081	Eyelet, chassis mtg: plain; 9/32" long.
5A600963	Eyelet, chassis mtg: pierced; 1/8" long
5A71092	Grommet, chassis mtg: rubber
36K601052	Knob, control (Vol-On-Off): walnut-mahog.
36K601056	Knob, control (Phono-Tone-Radio): walnut-manogany
36K601057	Knob, control (AM-FM): walnut-mahogany
36K601055	Knob, control (Tuning): walnut-mahogany
4S7657	Lockwasher, ext: #8; cad pl (spkr mtg)
2S7005	Nut, hex: 6-32 x 1/4 stl; cad pl (pointer mtg)
2S7003	Nut, hex: 8-32 x 5/16; cad pl (spkr mtg)
62K70581	Overlay, logotype: "Motorola"; gold lacquer finish
1X600851	Pointer and Collar Assembly (less shaft and sleeve)
55K600653	Pull, record changer drawer: satin brass.
3K600655	Screw, machine: 8-32 x 1/2 cross slot head; statuary bronze finish (RC drawer pull mtg)
3S7536	Screw, sheet metal: #6 x 3/8 PKA slotted acorn head; antique copper finish (back cover mtg)
3K653	Screw, speaker mtg: 8-32 x 1-1/4"; copper oxide finish
1A690738	Shaft and Sleeve Assembly, pointer: less detent spring and ball,and pointer
55K600654	Slide, record changer (on sides of RC drawer)
2S400199	Speednut: for .050 stud (dial scale mtg)
41A690732	Spring, compression (pointer detent)
4S1765	Washer, flat: 1/2 x .147 x .015 stl; cad pl (pointer mtg)
4S7629	Washer, flat: 1/2 x 3/16 x .048 stl; cad pl (spkr mtg)
4A690729	Washer, spring (pointer mtg)

MODEL 8FM21B CABINET PARTS -Same as 8FM21 except:

16K600650	Cabinet, console: blonde; complete, less pointer escutcheon and dial scale
13K600652	Cloth, grille: 17-1/2" x 18-1/4"; eggshell
36K601058	Knob, control (Vol-On-Off): tan
36K601063	Knob, control (Phono-Tone-Radio): tan
36K601064	Knob, control (AM-FM): tan
36K601062	Knob, control (Tuning): tan
3K600656	Screw, machine: 8-32 x 1/2 cross slot head; brass (RC drawer pull mtg)

©John F. Rider

Compliments of www.nucow.com

MODELS 9FM21,
9FM21B, Ch. HS-246

GENERAL INFORMATION

TYPE - FM-AM Radio Phonograph Combination

RECEIVER MODELS-

Model	Color
9FM21	Red-brown mahogany
9FM21B	Blonde

TUNING RANGE -AM 535 to 1620 Kc AM IF - 455 Kc
FM 88 to 108 Mc FM IF - 10.7 Mc

TUBE COMPLEMENT -

6AU6	FM-AM RF Amplifier
6BA7	FM-AM Converter
6BA6	FM-AM IF Amplifier
6AU6	FM IF Amplifier
6AL5	FM Ratio Detector
6AV6	AM Det & 1st Audio Amp
6V6GT	Power Amplifier
6V6GT	Power Amplifier
7Z4	Rectifier

POWER SUPPLY - 117 volts, 60 cycle AC only; 100 watts, including phono motor

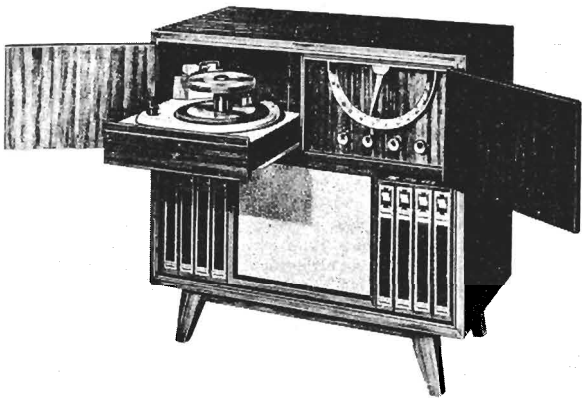

PHONOGRAPH - Model RC-37, three-speed: 33, 45 & 78 RPM. Refer to the RC-37 Service Manual for record changer service information.

INSTALLATION & OPERATING INSTRUCTIONS

ANTENNAS

No outside antenna or ground is normally required for standard broadcast (AM) reception, as a loop antenna is located inside the cabinet. Antenna connections are shown in Figure 1. In locations where additional pick-up is desired, an external antenna may be connected to the clip marked "EXT BC ANT" on the loop antenna.

An FM loop antenna, mounted inside the cabinet, eliminates the need for an external FM antenna when the receiver is used in normal FM service areas such as are found in and for a few miles around metropolitan areas.

In "fringe" or weak signal areas, improved FM reception can be obtained by using an outside FM antenna. The loop connections should be removed from the terminal strip on the rear of the chassis and the outside antenna should be connected, through a 300 ohm twin transmission line, to the terminal strip, as shown in Figure 1. Orient the antenna to obtain maximum volume of the FM stations.

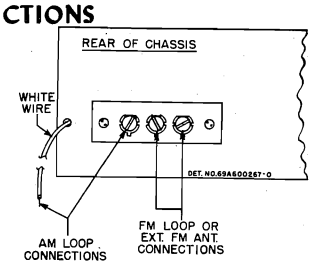

FIGURE 1. ANTENNA CONNECTIONS

CONTROLS

Refer to Figure 2 for the locations of the radio operating controls.

Power for both the radio and the record changer is controlled by the VOL-ON-OFF knob. The phonograph motor will not operate, however, until the PHONO-FM-AM knob is rotated to "PHONO"

Tuning of FM stations should be done very carefully, for best sound reproduction, not necessarily for the strongest volume received.

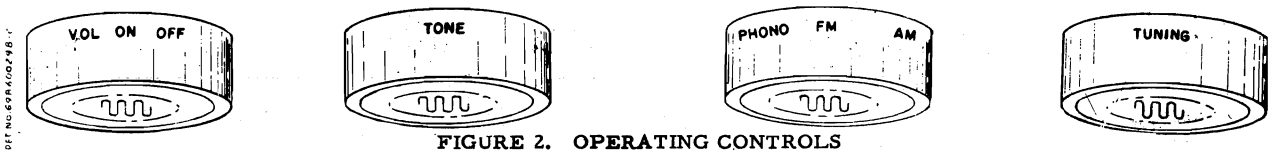

FIGURE 2. OPERATING CONTROLS

SERVICE NOTES

TO REMOVE CHASSIS FROM CABINET:

1. Remove the screws from the cabinet back.
2. Disconnect the phono power lead, the phono pick-up lead, the speaker leads, the line cord, and the antenna loop leads.
3. Remove the pointer escutcheon by pulling it downward.
4. Turn the tuning knob counterclockwise until the pointer reaches the extreme low frequency end of the the dial scale.
5. From the back of the cabinet, loosen the pointer adjustment setscrew (see Figure 3), and pull the pointer shaft assembly from the chassis. CAUTION: Do not remove the nut from the front of the pointer, as the detent ball and spring will fall out and may become lost.
6. Pull off the control knobs.
7. Remove the three chassis mounting screws, from beneath the chassis.
8. Slide the chassis from the cabinet.

©John F. Rider

Compliments of www.nucow.com

TO CALIBRATE DIAL:

1. Turn the tuning knob counterclockwise until the end of its travel is reached.

2. From the back of the cabinet, loosen the pointer adjustment setscrew (see Figure 3). CAUTION: Do not remove the nut from the front of the pointer.

3. Move the pointer until it is in a horizontal position (at the low frequency end of the dial scale.

4. Tighten the adjustment setscrew.

NOTE: If the pointer is moved by hand accidentally, it will be released from a detent in the pointer collar, and no damage to the tuning mechanism will result. To reset the pointer, move it back and forth until it again engages in the detent.

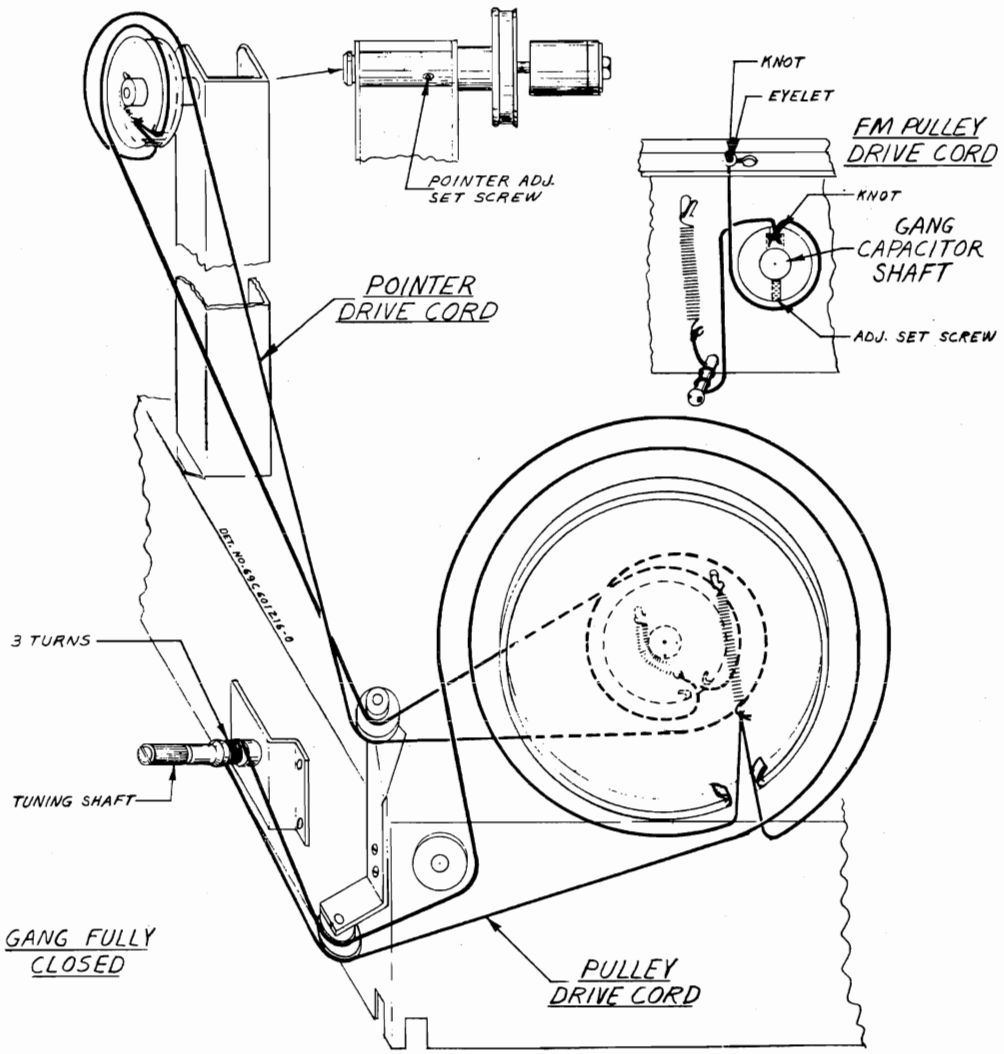

FIGURE 3. POINTER & DRIVE CORD RESTRINGING DETAIL

ALIGNMENT

GENERAL INFORMATION

1. Maximum performance can be obtained only if extreme care is exercised during alignment.

2. Use a small fibre screwdriver for aligning the IF transformers.

3. Refer to Figure 4 for the location of all alignment trimmers and cores.

4. As the stages are brought into alignment, reduce the signal generator output to a low value to avoid overloading the receiver.

©John F. Rider

Compliments of www.nucow.com

MODELS 9FM21,
9FM21B, Ch. HS-246

AM BROADCAST BAND - IF & RF ALIGNMENT

1. Connect the AM signal generator as in chart below, with 400 cycle, 30% modulation.
2. Connect the output meter across the speaker voice coil. Throughout alignment reduce the generator output to a level which produces less than 1.27 volts (.5 watt) across the voice coil, to avoid overloading the receiver.
3. Set the bandswitch to the AM position.
4. Turn the receiver volume control to maximum.
5. Proceed as shown in the following chart.

STEP	DUMMY ANTENNA	GENERATOR CONNECTION	GENERATOR FREQUENCY	GANG SETTING	ADJUST	REMARKS
IF ALIGNMENT						
1.	.1 mf	Grid of conv. V-2 (pin 7, 6BA7)	455 Kc	Fully opened	1, 2, 3, & 4 (IF cores)	Adjust for maximum.
RF ALIGNMENT						
2.	.1 mf	Grid of conv. V-2 (pin 7, 6BA7)	1620 Kc	Fully opened	5 (AM osc)	Adjust for maximum.
3.	.1 mf	Grid of conv. V-2 (pin 7, 6BA7)	1400 Kc	Tune in signal	6 (AM RF)	Adjust for maximum.
4.		-	-	-	-	Connect AM loop to chassis.
5.	-	Across radiation loop*	1400 Kc	Tune in signal	7 (AM ant)	Adjust for maximum.

* Connect generator output across 5" diameter, 5 turn loop and couple inductively to receiver loop. Keep loops at least 12" apart.

ORDER OF ALIGNMENT AND EQUIPMENT REQUIRED

1. AM Broadcast Band IF & RF Alignment
   a. 455 to 1620 Kc AM Signal Generator
   b. Low range output meter

2(A) FM Band IF & RF Alignment (preferred method)
   a. 10.7 to 108 Mc FM signal generator
   b. Oscilloscope.

(B) FM Band IF & RF Alignment (alternate method)
   a. 10.7 to 108 Mc signal generator (unmodulated)
   b. Low range DC electronic voltmeter

FM BAND - IF & RF ALIGNMENT (PREFERRED METHOD)

1. The following FM alignment procedure, using an FM signal generator and an oscilloscope, is to be preferred because the actual response pattern may be observed on the scope and adjusted for best symmetry and maximum amplitude.
2. Connect the vertical input terminals of the oscilloscope between the chassis and the junction of resistor R-19 (47K) and capacitor C-24 (1000 mmf).
3. Connect the FM signal generator sync voltage output terminals, through a phase shifting network, to the horizontal input terminals of the scope, as in Figure 5. (Other values of resistance and capacitance may be required, depending upon the scope). The phasing control should be adjusted to give only one trace on the scope. NOTE: If the FM generator has a built-in phase control, the phase shifting network is not necessary.
4. Set the bandswitch to the FM position.
5. Throughout alignment, reduce the generator output

©John F. Rider

Compliments of www.nucow.com

MODELS 9FM21,
9FM21B, Ch. HS-246

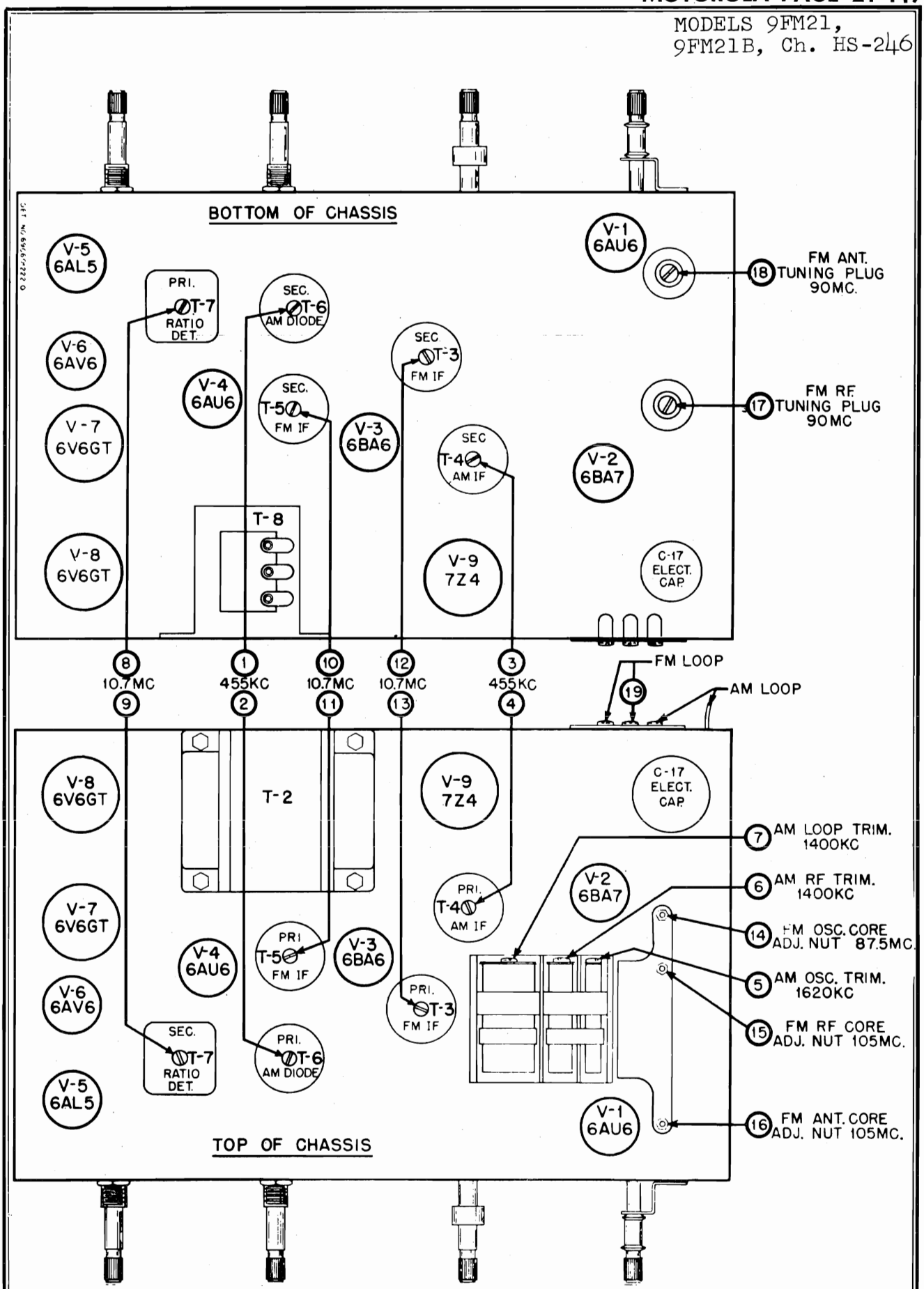

FIGURE 4. TUBE AND TRIMMER LOCATIONS

©John F. Rider

Compliments of www.nucow.com

MODELS 9FM21,
9FM21B, Ch. HS-246

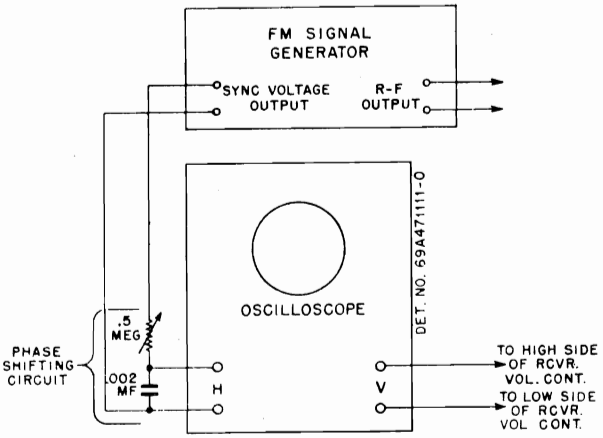

FIGURE 5.
FM SIGNAL GENERATOR & OSCILLOSCOPE HOOK-UP

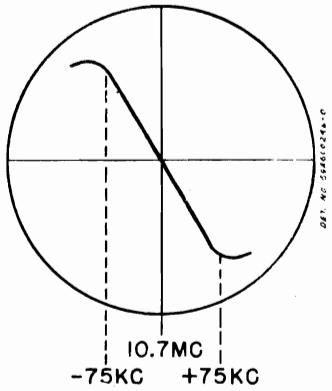

FIGURE 6. RATIO DETECTOR WAVEFORM

to keep the signal just above the noise level, to avoid overloading the receiver.

6. Proceed as shown in the following chart.

STEP	DUMMY ANTENNA	GENERATOR CONNECTION	GENERATOR FREQUENCY	TUNER SETTING	ADJUST	REMARKS
IF ALIGNMENT						
1.	1000 mmf	Grid of 2nd IF Amp V-4 (pin 1, 6AU6)	10.7 mc ±100 kc dev	Fully opened	8 (ratio det pri)	Adjust for maximum amplitude of pattern. *
2.	1000 mmf	Grid of 2nd IF Amp V-4 (pin 1, 6AU6)	10.7 mc ±100 kc dev	Fully opened	9 (ratio det sec)	Adjust for symmetrical curve, as shown in Figure 6.
3.	-	-	-	-	-	Repeat steps 1 & 2 for maximum amplitude and best symmetry.
4.	1000 mmf	Grid of 1st IF Amp V-3 (pin 1, 6BA6)	10.7 mc ±100 kc dev	Fully opened	10 & 11 (2nd IF sec & pri)	Adjust for maximum amplitude of pattern. *
5.	1000 mmf	Grid of conv. V-2 (pin 7, 6BA7)	10.7 mc ±100 kc dev	Fully opened	12 & 13 (1st IF sec & pri)	Adjust for maximum amplitude of pattern. *
6.	1000 mmf	Grid of conv. V-2 (pin 7, 6BA7)	10.7 mc ±100 kc dev	Fully opened	10, 11 12 & 13	Readjust for maximum amplitude and best symmetry.
RF ALIGNMENT						
7.	270 ohms	FM terminal 19 on rear of chassis	87.5 mc ±22-1/2 kc dev	Fully closed	14 (osc core)	Adjust for maximum amplitude of pattern. *
8.	-	-	-	Fully closed	15 & 16 (RF & ant cores)	Turn counterclockwise until cores are at bottom of pipe, then turn two turns clockwise.
9.	270 ohms	FM terminal 19 on rear of chassis	90 mc ±22-1/2 kc dev	Tune in signal	17 & 18 (RF & ant tuning plugs)	Adjust for maximum amplitude of pattern. *
10.	270 ohms	FM terminal 19 on rear of chassis	105 mc ±22-1/2 kc dev	Tune in signal	15 & 16 (RF & ant cores)	Adjust for maximum amplitude of pattern. *
11.	-	-	-	-	-	Repeat steps 9 & 10 until no further adjustment is necessary.

* An output meter across the speaker voice coil will also indicate maximum amplitude. It should not be used in place of the scope, however, since it will not show symmetry of the curve.

©John F. Rider

Compliments of www.nucow.com

MODELS 9FM21,
9FM21B, Ch. HS-246

FM BAND - IF & RF ALIGNMENT (ALTERNATE METHOD)

1. The following procedure for FM alignment, with an unmodulated carrier generator and a DC electronic voltmeter, is not as desirable as the preceding method; but it may be used if no FM generator is available.

2. Connect the signal generator as in chart below, with no modulation.

3. Set the bandswitch to the FM position.

4. Except in step 2 below, connect the electronic voltmeter across resistor R-23 (33K) in the ratio detector stage.

5. Throughout alignment reduce the signal generator output to a value which produces no more than a 5 volt rise above no signal voltage, to avoid overloading the receiver.

6. In step 2 below, connect two 100K ohm resistors in series across R-23. Connect the electronic voltmeter between the volume control side of resistor R-19 (47K) and the junction of the two 100K resistors, with the low side of the meter at the 100K resistors.

7. Proceed as shown in the following chart.

STEP	DUMMY ANTENNA	GENERATOR CONNECTION	GENERATOR FREQUENCY	TUNER SETTING	ADJUST	REMARKS
IF ALIGNMENT						
1.	1000 mmf	Grid of conv. V-2 (pin 7, 6BA7)	10.7 mc	Fully opened	8, 10, 11, 12 & 13 (IF cores)	Adjust for maximum.
2.	1000 mmf	Grid of conv. V-2 (pin 7, 6BA7)	10.7 mc	Fully opened	9 (ratio det sec)	Adjust for zero. (Connect meter as in step 6 above).
RF ALIGNMENT						
3.	270 ohms	FM terminal 19 on rear of chassis	87.5 mc	Fully closed	14 (osc core)	Adjust for maximum.
4.	-	-	-	Fully closed	15 & 16 (RF & ant cores)	Turn counterclockwise until cores are at bottom of pipe, ther turn two turns clockwise.
5.	270 ohms	FM terminal 19 on rear of chassis	90 mc	Tune in signal	17 & 18 (RF & ant tuning plugs)	Adjust for maximum.
6.	270 ohms	FM terminal 19 on rear of chassis	105 mc	Tune in signal	15 & 16 (RF & ant cores)	Adjust for maximum.
7.	-	-	-	-	-	Repeat steps 5 & 6 until no further adjustment is necessary.

REPLACEMENT PARTS LIST

NOTE: When ordering parts, specify model number of set in addition to part number and description of part.

Ref. No.	Part No.	Description
CHASSIS PARTS - ELECTRICAL		
Capacitors		
C-1	19B690978	Variable, 3-gang .....
C-2	21K77375	Ceramic: 220 mmf 500V .....
C-3	21K70720	Ceramic: 5 mmf 500V .....
C-4	21K482726	Ceramic, disc type: 10,000 mmf 450V
C-5	21B77286	Ceramic: 100 mmf 500V .....
C-6	21B77286	Ceramic: 100 mmf 500V .....
C-7	21B77286	Ceramic: 100 mmf 500V.....
C-8	21R6554	Mica: 100 mmf 10% 500V .....
C-9	21K28816	Ceramic: 24 mmf 500V .....
C-10	21K478410	Ceramic: 1000 mmf 500V .....
C-11	21K691203	Ceramic: 85 mmf 500V.....
C-12	8R9821	Paper: .05 mf 200V .....
C-13	21B77286	Ceramic: 100 mmf 500V.....
C-14	8R9809	Paper: .01 mf 400V .....
C-15	8R9809	Paper: .01 mf 400V .....
C-16	8R9813	Paper: .005 mf 600V .....
C-17	23B690975	Electrolytic: 40 mf/300V, 40-40 mf/250V, 40 mf/25V .....
C-18	21K482726	Ceramic, disc type: 10,000 mmf 450V
C-19	21K77373	Ceramic: 47 mmf 500V .....
C-20	21K77373	Ceramic; 47 mmf 500V .....
C-21	21K478410	Ceramic: 1000 mmf 500V .....
C-22	8R9824	Paper: .002 mf 400V .....
C-23	8K470606	Paper: .05 mf 400V .....
C-24	21K478410	Ceramic: 1000 mmf 500V .....
C-25	21B484337	Ceramic: dual; 250-250 mmf/450V...
C-26	8K470606	Paper: .05 mf 400V .....
C-27	8R9813	Paper: .005 mf 600V .....
C-28	8R9813	Paper: .005 mf 600V .....
C-29	8R9813	Paper: .005 mf 600V .....
C-30	8R9821	Paper: .05 mf 200V .....
C-31	23K690543	Electrolytic: 3 mf 50V .....
C-32	8R9809	Paper: .01 mf 400V .....
C-33	21A470789	Ceramic, disc type: 5000 mmf 450V
C-34	21K77375	Ceramic: 220 mmf 500V .....

©John F. Rider

Compliments of www.nucow.com

MODELS 9FM21,
9FM21B, Ch. HS-246

Ref. No.	Part No.	Description
Dial Light		
I-1,2	65X10867	Bulb, dial light: #44; 6-8V; .25 amp; clear; bayonet base .....
Coils		
L-1	24K690985	FM loop antenna: with lead .....
L-2	24C690896	AM loop antenna .....
L-3	24C690584	Inductor and Capacitor Assembly: FM antenna: less tuning core.....
L-4	24A484025	RF choke .....
L-5	24C690584	Inductor and Capacitor Assembly: FM RF; less tuning core .....
L-6	24K690996	Inductor and Capacitor Assembly: FM oscillator; less tuning core...
L-7	24K780128	RF choke: insulated .....
L-8	24B690976	AM oscillator coil .....
Speaker		
LS-1	50C601037	Speaker: 10" PM; 3.2 ohm VC....
Resistors		
		Note: All resistors are insulated carbon type unless otherwise specified.
R-1	6R6046	1 meg 10% 1/2W .....
R-2	6R5551	120 10% 1/2W .....
R-3	6R6048	47,000 10% 1/2W .....
R-4	6R3949	470 20% 1/2W .....
R-5	6R490131	3.3 10% 1/2W .....
R-6	6R6028	22,000 20% 1/2W .....
R-7	6R5585	8.2 meg 10% 1/2W .....
R-8	6R6048	47,000 10% 1/2W .....
R-9	6R6038	1500 10% 1/2W .....
R-10	6R5725	8200 10% 2W .....
R-11	6R6497	3.3 meg 10% 1/2W .....
R-12	6R2039	68 10% 1/2W.....
R-13	6R5725	8200 10% 2W .....
R-14	6R6046	1 meg 10% 1/2W .....
R-15	17A690973	Wirewound: 360 10% 3W; center tapped .....
R-16	6R6056	47,000 20% 1/2W .....
R-17	6R3992	150 20% 1/2W .....
R-18	6R6431	15,000 10% 1W .....
R-19	6R6056	47,000 20% 1/2W .....
R-20	6R6032	470,000 20% 1/2W .....
R-21	6R6032	470,000 20% 1/2W .....
R-22	6R6389	220 10% 1W .....
R-23	6R6410	33,000 10% 1/2W .....
R-24	6R5598	390 10% 1W .....
R-25	6R6012	33,000 20% 1/2W .....
R-26	18A600974	Volume control: 2 meg; tapped at 600,000 ohms; includes on-off sw
R-27	18K77399	Tone Control: 1 meg .....
R-28	6R2109	10 meg 20% 1/2W .....
R-29	6R6001	68,000 20% 1/2W .....
Switches		
S-1	40B690977	Band Switch: AM-FM-Phono .....
S-2	-	On-Off Switch (on volume control)..
S-3	40A691922	Phono-Radio-Switch; SPST .....
Transformers		
T-1	24B690899	AM RF Transformer .....
T-2	25B691035	Power Transformer .....
T-3	24B690540	1st FM IF Transformer (orange dot): 10.7 mc; complete with capacitor and cores; less shield .....
T-4	24B482863	AM IF Transformer (brown dot): 455 Kc: complete with capacitors and cores; less shield .....
T-5	24B690541	2nd FM IF Transformer (yellow dot): 10.7 mc; complete with capacitor and cores; less shield .....
T-6	24B482865	AM Diode Transformer (red dot): 455 Kc: complete with capacitors and cores; less shield.....
T-7	24B690542	Ratio Detector Transformer: 10.7 mc; complete with capacitors, cores and shield .....
T-8	25B690898	Audio Output Transformer .....

CHASSIS PARTS - MECHANICAL

Part Number	Description
1X690717	Bracket Assembly, tuning core mtg: includes shoulder rivet and single anti-backlash clip .....
1X600827	Bracket & Pulleys Assembly: includes four pulleys and shoulder rivets (cord guides on chassis front) .....
7A600965	Bracket, pilot light mtg .....
7B600801	Bracket, pointer mtg .....
7C690567	Bracket, tuner mtg (gang mtg) .....
7A77337	Bracket, tuning shaft .....
43K890398	Bushing, line cord retainer (use with 43A890397) .....
43A890397	Bushing, line cord strain relief (use with 43K890398) .....
42A690560	Clip, anti-backlash: double (on tuner mounting brkt) .....
42K690561	Clip, anti-backlash: single (on core mtg brkt) .....
42B482867	Clip, spring: blued finish (holds IF transformer) .....
11M488137	Cord, dial (core drive) .....
11M8944	Cord, dial (pointer drive) .....
30K21859	Cord, line: with plug: 9 ft long .....
46B692164	Core, iron and screw: green dot (FM osc tuning core) .....
46K692165	Core, iron and screw (FM RF and ant tuning core) .....
5S7866	Eyelet: .125 x .091; brass; nkl pl (core drive cord retainer) .....
1X600081	Link Assembly, bandswitch actuating: complete with bushings; less setscrews..
4S9751	Lockwasher, int-ext: #8; cad pl (pointer drive pulley mtg) .....
2S7019	Nut, hex: 4-40 x 1/4; cad pl (FM tuning core mtg) .....
2S7051	Nut, hex palnut: 3/8-32 x 9/16; cad pl (bandswitch, tone and volume control mtg) .....
1X600828	Pulley Assembly, pointer & gang drive (includes 3-1/2" & 1-1/4" pulleys)...
49A23960	Pulley, cord: 1/4" groove (on pulley bracket) .....
49A21741	Pulley, cord: 3/8" groove (on pulley bracket) .....
49A73807	Pulley, cord: 1/2" groove (on chassis side and on pulley bracket).....
49A26433	Pulley, cord: 21/32" groove (on pulley bracket) .....
49A690562	Pulley, core drive: brass .....
9K592170	Receptacle, phono pick-up: 1-prong .....
9A27674	Receptacle, phono power: 3-prong .....
5S8497	Rivet: .088 x 1/8 stl; nkl pl (single anti-backlash clip mtg) .....
5S7771	Rivet: .088 x 3/16; stl; nkl pl (min and midget tube socket mtg) .....
5S7707	Rivet: .122 x 5/32; stl; nkl pl (loctal tube socket, terminal strip, output transformer mtg) .....
5S7701	Rivet: .122 x 3/16 stl; nkl pl (power receptacle, ant term strip, and tuning shaft bracket mtg) .....
5S7700	Rivet: .122 x 1/4; stl; nkl pl (octal tube socket mtg) .....
5K13896	Rivet, shoulder (tuning core cord guide and mounts 1/2" and 3/8" pulleys to bracket) .....
5K71246	Rivet, shoulder (pulley mtg on side of chassis) .....
5K71735	Rivet, shoulder (mounts 21/32" and 3/8" pulleys to bracket) .....

©John F. Rider

Compliments of www.nucow.com

MODELS 9FM21, 9FM21B, Ch. HS-246

Part Number	Description
3S7462	Screw, machine: 6-32 x 3/16 plain hex head; cad pl (electrostatic shield mtg)
3S7326	Screw, machine: 8-32 x 3/16 plain locking hex head; cad pl (gang mtg)
3S7163	Screw, machine: 8-32 x 1/4 plain hex head; cad pl (pointer drive pulley mtg)
3S2695	Screw, sheet metal: #6 x 3/16 PKZ plain hex head; cad pl (tuner brkt mtg)
3S7454	Screw, sheet metal: #8 x 1/4 PKZ plain hex head; cad pl (pointer bracket mtg)
3S7475	Screw, sheet metal: #8 x 1/4 PKZ slotted acorn head; cad pl (power trans mtg)
3S7103	Setscrew: 8-32 x 1/8 Allen head; cad pl (core drive pulley & pointer mtg)
3S7113	Setscrew: 8-32 x 1/4 slab head; cad pl (bandswitch link assembly mtg)
1K601085	Shaft and Pulley Assembly, pointer mtg
1X691134	Shaft, tuning: complete with pulley
26K485936	Shield, coil: for IF transformers
26K690984	Shield, electrostatic (gang shield)
26K690981	Shield, tube: spring type
26A692080	Shield, tube (for V-9): includes 41K692081 spring
9K600968	Socket, pilot light
9A72519	Socket, tube: loctal
9A690129	Socket, tube: midget; 7-prong(for V-1)
9K484167	Socket, tube: miniature; 7-prong
9A485495	Socket, tube: noval; 9-prong
9A76209	Socket, tube: octal
41A690598	Spring, coil: 7 turns; cosmoline dipped (FM RF & ant core mtg)
41K691840	Spring, coil: 8 turns; copper plated (FM osc core mtg)
41A14244	Spring, tension (core & pointer drive cord)
41K692081	Spring, tube shield retaining (for V-9 shield)
31K51251	Strip, terminal: 1 insulated lug, #1 gnd; 3/8" spacing
•31K76184	Strip, terminal: 2 insulated lugs; #1 gnd; 3/8" spacing
31K471565	Strip, terminal: 3 insulated lugs, #4 gnd; 3/8" spacing
31A690974	Strip, terminal: 7 insulated lugs, #4 & 9 gnd; 3/8" spacing
31K471498	Strip, terminal: 3-screw (antenna input)
29K5412	Terminal, plain pin (on speaker leads)
4A70015	Washer, "C" (tuning shaft retainer)
4A21941	Washer, "C" (holds pointer mtg shaft & pulley)
4S7582	Washer, flat: 1/2 x .195 x .033 stl; cad pl (pointer drive pulley mtg)
MODEL 9FM21 CABINET PARTS	
43A4326	Ball, steel: 1/8" diameter (pointer detent)
38K691915	Button, plug (on record changer)
16F600641	Cabinet, console: red-brn mahogany; complete, less pointer escutcheon and dial scale
55K482159	Catch, bullet: statuary bronze finish (door latch - on cabinet)
42A470832	Clamp, cable: plastic (holds line cord)
42K600645	Clip, pointer escutcheon
43K600637	Cloth, grille: 13-3/8 x 15-1/2; mahogany
15D600648	Cover, cabinet back
34D600819	Dial scale
34K600817	Escutcheon, pointer
5S7870	Eyelet: brass (on RC drawer panel -holds extra spindle)
5A71081	Eyelet, chassis mtg: plain; 9/32"long.
5A600963	Eyelet, chassis mtg: pierced ; 1/8" lg.
5A71092	Grommet, chassis mtg: rubber
55K600643	Handle, door: polished brass
55K600646	Hinge, door: bronze finish (lower hinges)
55K600639	Hinge, door (stop type): bronze finish (upper hinges)

Part Number	Description
14K791482	Insulator, fibre (clamps phono leads).
36C601041	Knob, control (VOL-ON-OFF): walnut-mahogany
36K601043	Knob, control (TONE): walnut-mahogany
36K601044	Knob, control (PHONO-FM-AM): walnut-mahogany
36K601045	Knob, control (TUNING): walnut-mahogany
1X600852	Lead and Plugs Assembly, phono-pick-up (shielded lead with two phono pick-up plugs)
4S7657	Lockwasher, ext: #8; cad pl (spkr mtg)
2S7005	Nut, hex: 6-32 x 1/4 stl; cad pl (pointer mtg)
2S7003	Nut, hex: 8-32 x 5/16; cad pl (spkr mtg)
62K70581	Overlay, logotype: "Motorola"; gold lacquer finish
35K691051	Pad, felt: 1/2" diameter (door stop)
64K600867	Panel, record changer bottom: chipboard.
1X600851	Pointer and Collar Assembly (less shaft and sleeve)
28A27573	Plug, phono motor: 3-pin; includes shell (on phono motor lead)
28K71775	Plug, phono pick-up
9A600040	Receptacle, phono motor: 3-prong; includes shell (on phono motor lead)
3K489169	Screw, machine: 8-32 x 1 cross slot head; statuary bronze finish (door handle mtg)
3S7536	Screw, sheet metal: #6 x 3/8 PKA slotted acorn head; antique copper finish (back cover mtg)
3S3387	Screw, sheet metal: #6 x 1/2 PKA plain hex head; statuary bronze finish (cable clamp mtg)
3K653	Screw, speaker mtg: 8-32 x 1-1/4"; copper oxide finish
3S1334	Screw, wood: #6 x 1 flat head; statuary bronze finish (door hinge mtg)
1A690738	Shaft and Sleeve Assembly, pointer: less detent spring and ball, and pointer
15A690616	Shell, receptacle (on phono motor receptacle)
15K74442	Shell, receptacle (on phono motor plug)
55K600171	Slide, record changer: left-hand (on side of RC drawer)
55K600172	Slide, record changer: right-hand (on side of RC drawer)
2S400199	Speednut: for .050 stud (dial scale mtg)
41A690732	Spring, compression (pointer detent)
55K482160	Strike & nail: statuary bronze finish (door latch - on door)
4S1765	Washer, flat: 1/2 x .147 x .015 stl; pl (pointer mtg)
4S7629	Washer, flat: 1/2 x 3/16 x .048 stl; pl (spkr mtg)
4S8214	Washer, flat: 7/8 x .203 x .067 stl; pl
4A690729	Washer, spring (pointer mtg)
MODEL 9FM21B CABINET PARTS - Same as 9FM21 except:	
16K600642	Cabinet, console: blonde; complete, less pointer escutcheon and dial scale
55K482794	Catch, bullet: brass (door latch - on cabinet)
43K600638	Cloth, grille: 13-3/8 x 15-1/2; eggshell & brown
55K600647	Hinge, door: brushed brass finish (lower hinges) ....pr
55K600644	Hinge, door (stop type): brushed brass finish (upper hinges) ....pr
36K601046	Knob, control (VOL-ON-OFF): tan
36K601048	Knob, control (TONE): tan
36K601049	Knob, control (PHONO-FM-AM): tan
36K601051	Knob, control (TUNING): tan
3K489170	Screw, machine: 8-32 x 1 cross slot head; brass (door handle mtg)
55K482795	Strike & nail: brass (door latch - on door)

©John F. Rider

Compliments of www.nucow.com

MODELS 9FM21,
9FM21B, Ch. HS-246

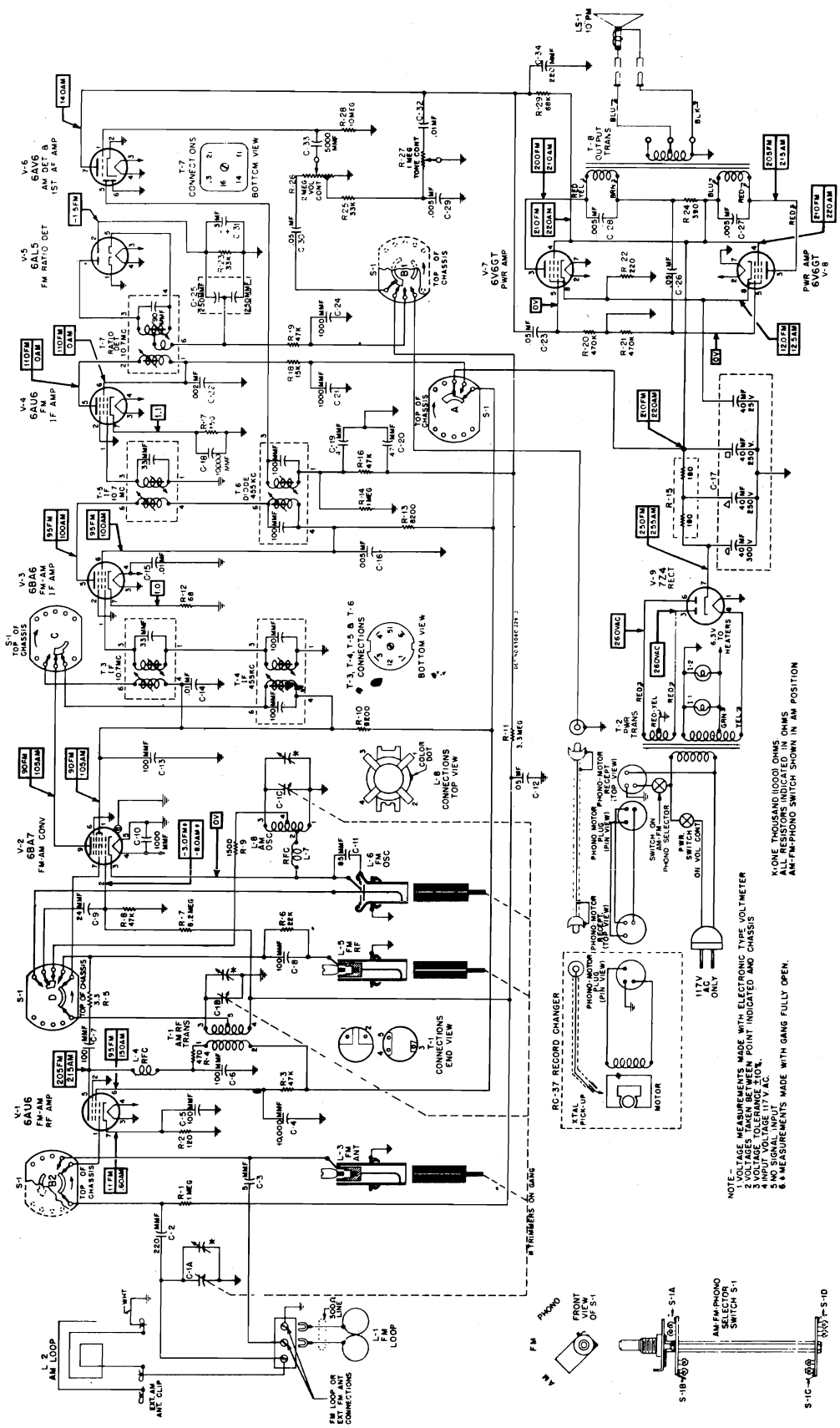

©John F. Rider

Compliments of www.nucow.com

MODEL 400

GENERAL INFORMATION

TYPE - Universal automotive type superheterodyne receiver with self-contained speaker. Designed for under-dash mounting.

TUNING RANGE - 535 to 1600 Kc IF - 455 Kc

TUBE COMPLEMENT - 6BA6 - RF Amplifier
6BE6 - Converter
6BA6 - IF Amplifier
6AV6 - Detector-AVC-AF Amplifier
6AS5 - Power Amplifier
6X4 - Rectifier

POWER INPUT - 6.3 volts DC at 6 amperes

POWER OUTPUT - 2 watts

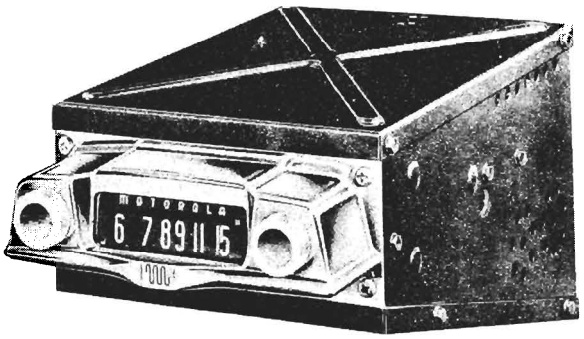

REPLACEMENT PARTS LIST

REF. NO.	PART NO.	DESCRIPTION
CHASSIS PARTS - ELECTRICAL		
CAPACITORS		
C-1	21K591682	Ceramic: 90 mmf 500V .....
C-2	8A4529	Paper: .006 mf 100V .....
C-3	20A485652	Trimmer, mica: 50 to 280 mmf 500V
C-4	8K472035	Paper: .1 mf 100V .....
C-5	8K14791	Paper: .05 mf 400V .....
C-6	20A481526	Trimmer, mica: 20 to 180 mmf 500V
C-7	21K70720	Molded: 5 mmf 500V .....
C-8	21K74661	Ceramic: 50 mmf 300V .....
C-9	20A580113	Trimmer, mica: 240 to 300 mmf 500V
C-10	8K13514	Paper: .05 mf 100V .....
C-11	8K17028	Paper: .5 mf 100V .....
C-12	8K592154	Paper: .03 mf 600V .....
C-13	8K472754	Paper: .01 mf 100V .....
C-14	8K23690	Paper: .01 mf 400V .....
C-15	21R6543	Mica: 250 mmf 500V .....
C-16	8K71909	Paper: .004 mf 400V .....
C-17	23A591500	Electrolytic: 15-10-20 mfd/ 350-350-25V .....
FUSE		
F-1	65A10266	Fuse: 10 amp .....
VIBRATOR		
G-1	48B3333	Vibrator: 4-pin; non-sync.....
DIAL LIGHT		
I-1	65X10867	Bulb: 6.3V; .25A; tubular; bayonet base; #44 .....
COILS		
L-1	24B580570	Coil, antenna .....
L-2	24K580571	Coil, RF .....
L-3	24B592036	Coil, oscillator .....
L-4	24K580706	Choke, RF .....
L-5	24A472535	Choke, hash .....

REF. NO.	PART NO.	DESCRIPTION
SPEAKER		
LS-1	50B591189 or 50B580759 or 50B590079	Speaker: PM; 5-1/4"; 3.2 ohm voice coil .....
RESISTORS		
		Note: All resistors are carbon insulated type unless otherwise specified.
R-1	6R6032	470,000 20% 1/2W .....
R-2	6R6075	100,000 20% 1/2W .....
R-3	6R6056	47,000 20% 1/2W .....
R-4	6R5614	56 10% 1/2W .....
R-5	6R5614	56 10% 1/2W .....
R-6	6R6022	330 10% 1/2W .....
R-7	6R6006	2200 20% 1W N.I. .....
R-8	18K592021	Volume Control: .5 meg; includes on-off switch .....
R-9	6R6004	1 meg 20% 1/2W .....
R-10	6R2122	4.7 meg 20% 1/2W .....
R-11	6R6032	470,000 20% 1/2W .....
R-12	6R6015	220,000 20% 1/2W .....
R-13	6R6390	180 10% 1W .....
R-14	6R6004	2200 20% 1W N.I. .....
SPARK PLATE		
SP-1	1A485606	Spark Plate Assembly .....
TRANSFORMERS		
T-1	24B485553	IF, 455 Kc; complete .....
T-2	24K485554	Diode: 455 Kc; complete ....
T-3	25C591740	Power Transformer .....
T-4	25B70171	Output Transformer .....

©John F. Rider

Compliments of www.nucow.com

MODEL 400

PART NUMBER	DESCRIPTION
CHASSIS PARTS - MECHANICAL	
42A485548	Clip, coil can mtg (T-1 & T-2 mtg)
42A4215	Clip, vibrator grounding .....
9K14906	Insulator, electrolytic mtg: armite .....
9K580705	Lead, fuse: complete with 10 amp fuse.
4S7666	Lockwasher, ext: #6; stl; cad pl (power trans mtg).....
4S8406	Lockwasher, int: #2; stl; cad pl (pointer plate mtg) .....
4S7650	Lockwasher, int: #6; stl; cad pl (dial light mtg) .....
2A78005	Nut, floating: with ear (on tuning shaft) .....
2A77596	Nut, floating: without ear (on tuning shaft) .....
2S7005	Nut, hex: 6-32 x 1/4; stl; cad pl (power trans mtg) .....
2S7051	Nut, hex: 3/8-32 x 9/16; Palnut; stl; cad pl (vol. cont mtg) .....
1X592056	Plate and Stud Assembly (pointer adj plate) .....
1X592054	Pointer Plate and Sleeving Assembly...
9A472148	Receptacle, antenna contact .....
5S7771	Rivet: .088 x 5/16; stl; nkl pl (tube socket mtg) .....
5S7707	Rivet: .122 x 5/32; stl; nkl pl (output trans mtg) .....
5S7701	Rivet: .122 x 3/16; stl; nkl pl (vibrator socket, dial light and spark plate assem mtg) .....
5S7703	Rivet: .122 x 7/32; stl; nkl pl (electrolytic wafer mtg) .....
3S1921	Screw, machine: 2-56 x 1/8; slotted binder head; stl; cad pl (pointer plate mtg and pointer adjustment screw) .....
3S7454	Screw, sheet metal: #8 x 1/4; plain hex head; stl; cad pl (tuner mtg)
47K592016	Shaft, drive (tuning shaft) .....
60K25753	Shield, light .....
9K580609	Socket, dial light: includes mtg brkt.
9A472534	Socket, tube: miniature .....
9A70208	Socket, tube: 4 prong (for vibrator)..
41A77592	Spring, compression (tuning shaft).
41A472659	Spring, torsion (pointer assembly..
46A485622	Stud, drive plate mtg .....
46A592015	Stud, pointer mtg .....
9A12705	Wafer, electrolytic mtg: bakelite..
4K24124	Washer, 'C' (drive shaft retainer).
4A11291	Washer, 'C' (pointer mtg and carriage plate stop) .....
4S488235	Washer, flat: 3/8 x 3/32 x .010; thick; stl; cad pl (pointer plate mtg) .....
4S1719	Washer, flat: 3/8 x 9/64 x .030; thick; stl; cad pl (pointer mtg)
4K592045	Washer, spring (drive shaft play takeup) .....
39A26068	Wiper, grounding: spring brass (grounds chassis to top cover)..
HOUSING PARTS	
15K592028	Cover, bottom: less speaker .....
15K592026	Cover, top .....
13D592010	Escutcheon, dial .....
7A485674	Frame, dial scale retainer .....
36K591957	Knob, control .....
4S7657	Lockwasher, ext: #8; stl; cad pl (speaker mtg) .....
2S7003	Nut, hex: 8-32 x 5/16 stl; cad pl (speaker mtg) .....
2S7988	Speednut (dial scale mtg) .....
34K591929	Scale, dial: glass .....
3S8114	Screw, sheet metal: #8 x 1/4 slotted acorn head; antique copper finish (housing screws) .....
3S490733	Screw, sheet metal: #8 x 1/4 PKZ Phillips binder head; chrome pl (escutcheon mtg) .....
MOUNTING PARTS AND ACCESSORIES	
7B590654	Bracket, receiver mtg (on escutcheon).
7A72256	Bracket, receiver mtg (on housing)....
7A484424	Bracket and Stud Assembly (receiver mtg)
8A4491	Capacitor, noise suppression (generator cap) .....
4S7688	Lockwasher, int-ext: 1/4; stl; cad pl (receiver mtg) .....d
2S7022	Nut, hex: 1/4-20 x 7/16; stl; cad pl (receiver mtg) .....
3S8109	Screw, sheet metal: #8 x 3/8; PKZ; slotted acorn head; stl; cad pl (receiver mtg) .....
3S7295	Screw, machine: 1/4-20 x 3/4; plain hex head; stl; cad pl (receiver mtg strap) .....
3S9694	Screw, machine: 1/4-20 x 1-1/2; plain hex head; stl; cad pl (receiver mtg to car firewall) .....
42A485718	Strap, receiver mtg .....
6A4141	Suppressor, noise (distributor) ..
TUNER PARTS - MECHANICAL	
Note:	Coils and trimmers are included in the Electrical Chassis Parts list. Drive shaft parts are included in the Mechanical Chassis Parts List.
1X580162	Carriage Plate Assembly: includes bakelite core insulator & slider spring..
46K489214	Core, iron and screw (specify color coding on old core when ordering)...
42A70184	Clip, core adjustment .....
5K580503	Grommet, rubber (Ant & RF coil mtg)..
5K580504	Grommet, rubber (oscillator coil mtg)
14A485602	Insulator, core: bakelite; 2-11/16 x 1-1/8 .....
5S8497	Rivet: .088 x 1/8; stl; nkl pl (terminal strip and slider mtg).....
5S6819	Rivet: .122 x 1/8; stl; nkl pl (shield mtg) .....
26A580546	Shield, coil .....
41A485649	Spring, core .....
41A580079	Spring, slider .....
31A485605	Strip, terminal: 2 insulated lugs, #2 mtg .....
4A70956	Washer, core insulator: 1/4 dia; bakelite .....

©John F. Rider

Compliments of www.nucow.com

MODEL 400

ALIGNMENT

Connect a low range output meter across speaker voice coil and set volume control at maximum. For greatest accuracy, keep output of receiver at approximately 1 watt (1 watt = 1.79 volts on output meter) throughout alignment by reducing signal generator output as stages are brought into alignment. Use a small fibre screwdriver when aligning IF and diode transformers. A special tool, Motorola Part No. 66A76278, is required for adjusting the tuner cores. IMPORTANT: Do not push in on the alignment tool when adjusting the tuner cores; the slightest inward pressure may move tuner carriage and result in inaccurate alignment. Remove receiver top and bottom covers and the escutcheon and dial scale assembly to expose all adjustments.

STEP	DUMMY ANTENNA	GENERATOR CONNECTION	GENERATOR FREQUENCY	TUNER SET TO	ADJUST	REMARKS
IF ALIGNMENT						
1.	.1 mf	6BE6 Grid (pin #7)	455 Kc	High frequency end (cores out)	1, 2, 3 & 4	Peak for maximum in order indicated. Check by repeating procedure.
RF ALIGNMENT						
2.	See Fig. 1.	Antenna receptacle through dummy.	1605 Kc	High frequency end; cores should project 1-1/4" from cans. (Screw out)	5, 6 & 7	Peak for maximum in order indicated.
3.	"	"	1300 Kc	1300 Kc per Fig. 2	8, 9 & 10	"
POINTER ADJUSTMENT						
4.	"	"	600 Kc	Tune for maximum	-	Replace dial scale & set pointer to 600 Kc by means of pointer adjustment screw.

5. With receiver installed in car, the antenna fully extended and dial set to approximately 1400 Kc, adjust antenna trimmer (7) for maximum volume of a weak station or noise between stations.

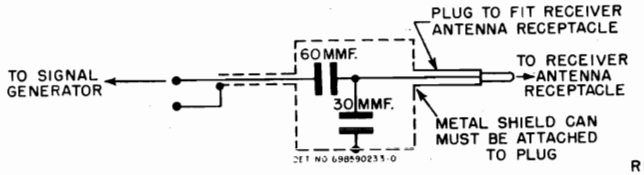

FIGURE 1. DUMMY ANTENNA

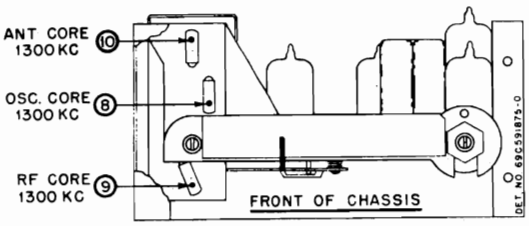

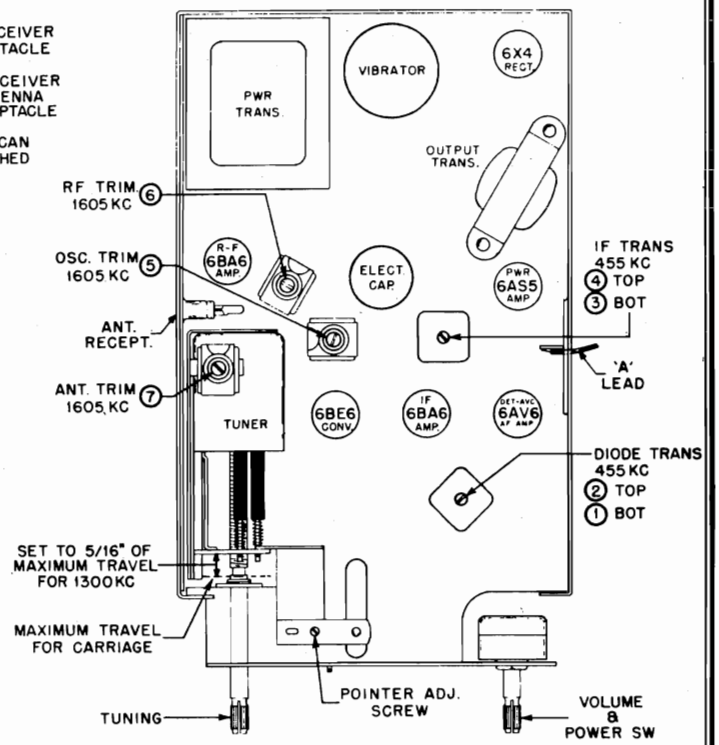

FIGURE 2. TUBE & TRIMMER LOCATIONS

©John F. Rider

Compliments of www.nucow.com

MODEL 400

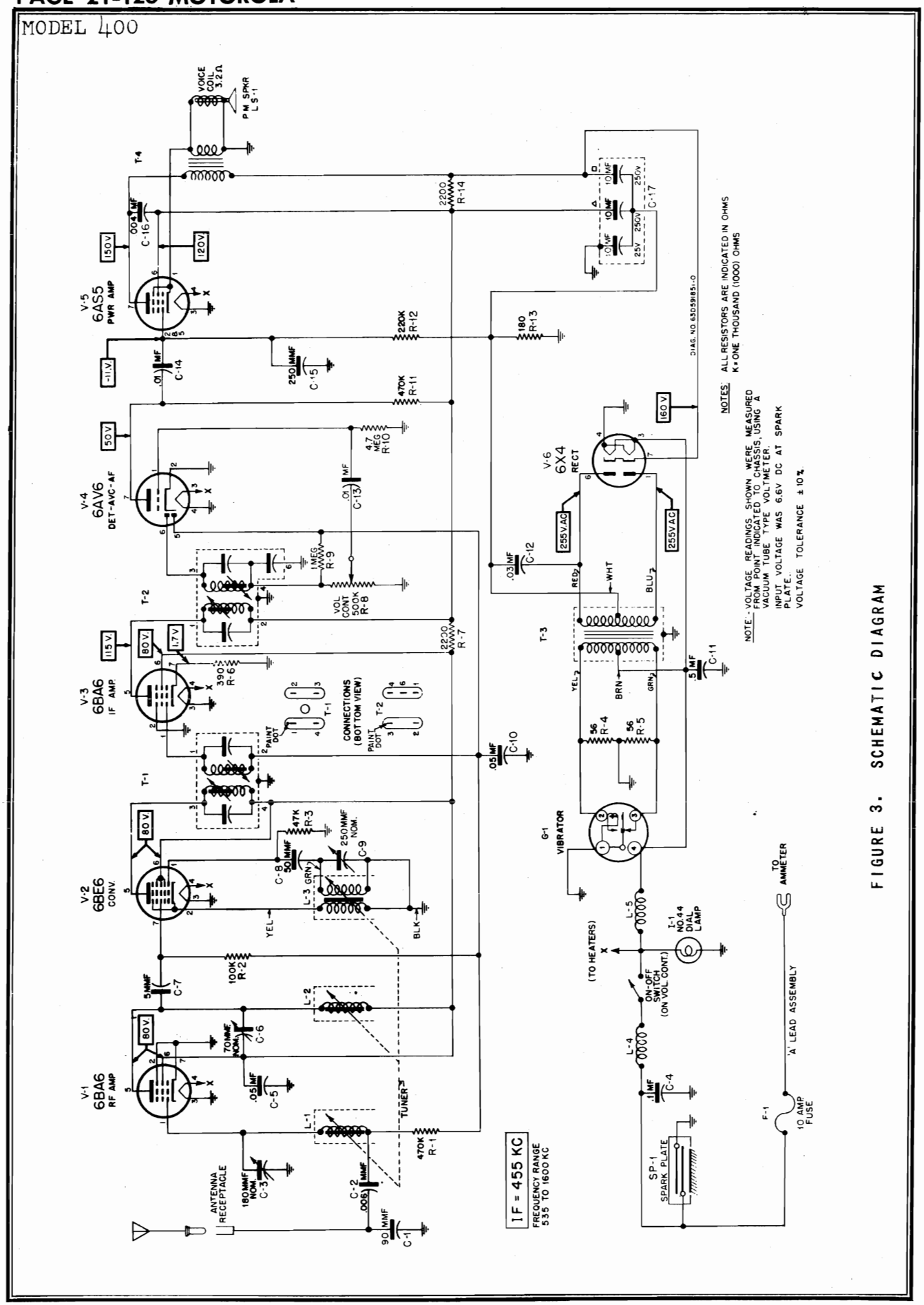

FIGURE 3. SCHEMATIC DIAGRAM

©John F. Rider

Compliments of www.nucow.com

GENERAL INFORMATION

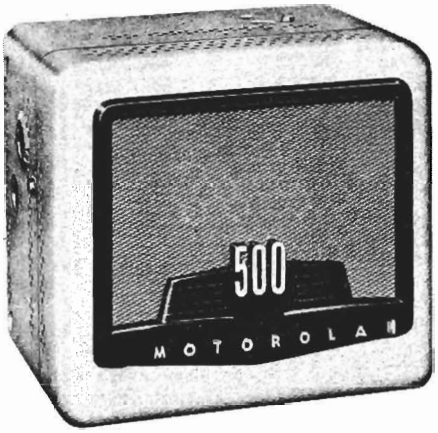

TYPE - Compact automotive type superheterodyne receiver with self-contained speaker. Receiver is designed for installation in any car when used with appropriate Motorola control head.

TUNING RANGE - 535 to 1600 Kc IF - 455 Kc

TUBE COMPLEMENT - 6BA6 - RF Amplifier
6BE6 - Converter
6BA6 - IF Amplifier
6AT6 - Det, AVC & AF Amp
6AQ5 - Power Amplifier
6X4 - Rectifier

POWER INPUT - 6.8 amps at 6.3 volts

POWER OUTPUT - 3.5 watts (max)

REPLACEMENT PARTS LIST

REF. NO.	PART NO.	DESCRIPTION
CHASSIS PARTS - ELECTRICAL		
CAPACITORS		
C-1	21A591682	Ceramic: 90 mmf 500V.....
C-2	8C4529	Paper: .006 mf 100V .....
C-3	20K592078	Trimmer, variable: 50 to 280 mmf; on same bracket as C-5 and C-8 (sold only as assembly).....
C-4	8R13166	Paper: .1 mf 400V .....
C-5	20K592078	Trimmer, variable: 20 to 180 mmf; on same bracket as C-3 and C-8 (sold only as assembly).....
C-6	21K70720	Molded: 5 mmf 500V .....
C-7	21R6513	Mica: 50 mmf 10% 300V .....
C-8	20K592078	Trimmer, variable: 500 to 580 mmf; on same bracket as C-3 and C-5 (sold only as assembly) .....
C-9	8K17028	Paper: .5 mf 100V .....
C-10	8R13514	Paper: .05 mf 100V .....
C-11	8R13514	Paper: .05 mf 100V .....
C-12	21B77562	Ceramic: 100 mmf 500V .....
C-13	21B77562	Ceramic: 100 mmf 500V .....
C-14	21K70720	Molded: 5 mmf 500V .....
C-15	8K17028	Paper: .5 mf 100V .....
C-16	8R490449	Paper: .02 mf 1000V .....
C-17	21K478410	Ceramic: 1000 mmf 500V .....
C-18	8R71911	Paper: .03 mf 400V .....
C-19	8R23690	Paper: .01 mf 400V .....
C-20	23A485677	Electrolytic: 15-10-20 mf/350-350-25V .....

REF. NO.	PART NO.	DESCRIPTION
FUSE		
F-1	65A10266	10 Amp (3AG) .....
VIBRATOR		
G-1	48B3333	Non-sync: 4-pin .....
COILS		
L-1,2	24B591664	RF & Antenna Coil (specify color of paint dots on old coil when ordering) .....
L-3	24B592153	Oscillator Coil (specify color of paint dots on old coil when ordering) .....
L-4,5	24K78026	Choke, RF .....
L-6	24A472535	Choke, hash .....
RESISTORS		
Note:	All resistors are insulated carbon type, 20% unless otherwise specified.	
R-1	6R6032	470,000 1/2W .....
R-2	6R6432	270 10% 1/2W .....
R-3	6R6075	100,000 1/2W .....
R-4	6R6056	47,000 1/2W .....
R-5	6R6090	470 10% 1/2W .....
R-6	6R6287	6800 1W N.I. .....
R-7	6R6004	1 meg 1/2W .....
R-8	1A472531	Volume Control: 500,000 ohms; includes SPST switch .....

©John F. Rider

Compliments of www.nucow.com

MODEL 500

REF. NO.	PART NO.	DESCRIPTION
R-9	6R6056	47,000 1/2W .....
R-10	6R6004	1 meg 1/2W .....
R-11	6R5614	56 10% 1/2W .....
R-12	6R5614	56 10% 1/2W .....
R-13	6R5577	2700 10% 1/2W .....
R-14	6R2118	3.3 meg 1/2W .....
R-15	6R6032	470,000 1/2W .....
R-16	6R6015	220,000 1/2W .....
R-17	6R6336	270 10% 1W .....
R-18	6R6184	1000 1W N.I. .....
SPARK PLATE		
SP-1	1X592328	Spark Plate Assembly: complete.
TRANSFORMERS		
T-1,2	24B485670	Diode or IF, 455 Kc: complete with tuning cores and padding capacitors but less shield...
T-3	25B70171	Output Transformer .....
T-4	25B472533	Power Transformer .....

PART NUMBER	DESCRIPTION
CHASSIS PARTS - MECHANICAL	
42A13177	Clip, center post grounding .....
42A4215	Clip, vibrator grounding .....
4S7695	Lockwasher, int: #5; stl; cad pl (terminal strip mtg).....
4S7671	Lockwasher, split: #8; stl; cad pl (spark plate mtg) .....
9A472148	Receptacle, antenna .....
5S7771	Rivet: .088 x 3/16 stl; nkl pl (tube socket mtg) .....
5S7706	Rivet: .122 x 1/8; stl; nkl pl (sensitivity control and center post ground clip mtg) .....
5S7707	Rivet: .122 x 5/32; stl; nkl pl (terminal strip and output transformer mtg) .....
5S7701	Rivet: .122 x 3/16; steel; nkl pl (vibrator grounding clip and output transformer mtg) .....
3S8140	Screw, sheet metal: #8 x 3/16 PKZ plain hex head; cad pl (tuner mtg)
3S7454	Screw, sheet metal: #8 x 1/4 plain hex head; stl; cad pl (capacitor bracket assembly and spark plate mtg) .....
3S3397	Screw, sheet metal: #8 x 5/16 PKZ plain hex head; cad pl (power transformer mtg) .....
26K485936	Shield (for T-1 & T-2) .....
9A70208	Socket, tube: 4-pin; with grounding lug (vibrator socket) .....
9A472534	Socket, tube: miniature; 7-prong ..
9K580218	Socket, tube: miniature; 8-prong ..
31C4079	Strip, terminal: 1 insulated lug, end mtg .....
31A472573	Strip, terminal: 2 insulated lugs, #2 mtg .....
31K16330	Strip, terminal: 3 insulated lugs, #3 mtg .....

PART NUMBER	DESCRIPTION
HOUSING PARTS	
42A472033	Clip, chassis retainer .....
13B592105	Cloth, speaker escutcheon .....
13C592107	Escutcheon, speaker .....
1X592332	Housing and Bushing Assembly, rear....
1X592334	Housing, front: includes escutcheon...
3S7456	Screw, sheet metal: #8 x 1/4 PKA slotted acorn head; antique copper finish (housing screws) .....
ACCESSORIES	
65X4151	Bulb, pilot light: 6-8V; clear bayonet base .....
8A4491	Capacitor, generator .....
9B473111	Lead Assembly, fuse: complete with 10 amp fuse .....
1X74340	Lead Assembly, dial light: complete with bulb .....
4S7653	Lockwasher, int-ext: 5/16; stl; cad pl (receiver mtg) .....
4S7657	Lockwasher, ext: #8; stl; cad pl (speaker mtg) .....
2S7003	Nut, hex: #8 x 5/16; stl; cad pl (speaker mtg) .....
2S2863	Nut, hex: 5/16-18 x 9/16; stl; cad pl (receiver mtg) .....
1K75148	Shaft, flexible: with housing 24" long
50B472012 or 50C580519 or 50K591140	Speaker, PM: 5-1/4; 3.2 ohm VC ....
3A77542	Stud, receiver mtg .....
6X4141	Suppressor, distributor .....
TUNER PARTS - MECHANICAL	
Note:	Electrical parts of the tuner are included in the Electrical Chassis Parts List.
1X592301	Manual Tuner MT-75 .....
1X592099	Base, Sleeve, Shields and Channels Assembly .....
1X78034	Carriage Plate, Slug Insulator and Center Guide Rod Assembly .....
42A70184	Clip, core adjustment .....
46K592080	Core, iron and screw .....
58K78012	Coupling, manual lead screw .....
14B78007	Insulator, slug: bakelite .....
2A77596	Nut, floating: without ear (on manual lead screw) .....
2A78005	Nut, floating: with ear (on manual lead screw) .....
64A77593	Plate, tuner front .....
5S7770	Rivet: .088 x 5/32; stl; nkl pl (slug insulator mtg) .....
47A78002	Rod, carriage guide .....
3S7352	Screw, machine: #8-32 x 2 slotted round head; stl; cad pl (front plate mtg) .....
43A70881	Sleeve, coil (iron) .....
41A77595	Spring, coil slug .....
41A77592	Spring, compression .....
42A21577	Washer, 'C': spring (manual lead screw mtg) .....
4A70873	Washer, coil spacer .....
4A74571	Washer, fishpaper .....
4A70956	Washer, slug insulator .....
4K485653	Washer, spring (manual lead screw mtg).....

©John F. Rider

Compliments of www.nucow.com

MODEL 500

ALIGNMENT

Remove receiver front and rear housings to expose all adjustments.

Connect a 6 volt battery to BAT terminal and chassis.

Connect a low range output meter across speaker voice coil and set volume control at maximum. For greatest accuracy, keep output of receiver at approximately 1 watt (1 watt = 1.79 volts on output meter) throughout alignment by reducing signal generator output as stages are brought into alignment. Use a small fibre screwdriver when aligning IF and diode transformers. A special tool, Motorola Part No. 66A76278, is required for adjusting the tuner cores. IMPORTANT: Do not push in on the alignment tool when adjusting the tuner cores; the slightest inward pressure may move tuner carriage and result in inaccurate alignment.

STEP	DUMMY ANTENNA	GENERATOR CONNECTION	GENERATOR FREQUENCY	TUNER SET TO	ADJUST	REMARKS
IF ALIGNMENT						
1.	.1 mf	6BE6 grid (pin #7) & chassis	455 Kc	High frequency end (cores out)	1, 2 3 & 4	Peak for maximum in order indicated. Check by repeating step.
RF ALIGNMENT						
2.	See Fig. 1	Antenna receptacle through dummy	1610 Kc	High frequency end; cores should project 1-1/8" from cans. (Screw out if necessary)	5, 6 & 7	Peak for maximum in order indicated.
3.	"	"	1425 Kc	1425 Kc per Fig. 1	8, 9 & 10	Peak for maximum in order indicated.

4. When receiver is installed in car, extend antenna fully, set dial to approximately 1400 Kc and repeak antenna trimmer (7) for maximum volume of a weak station or noise between stations.

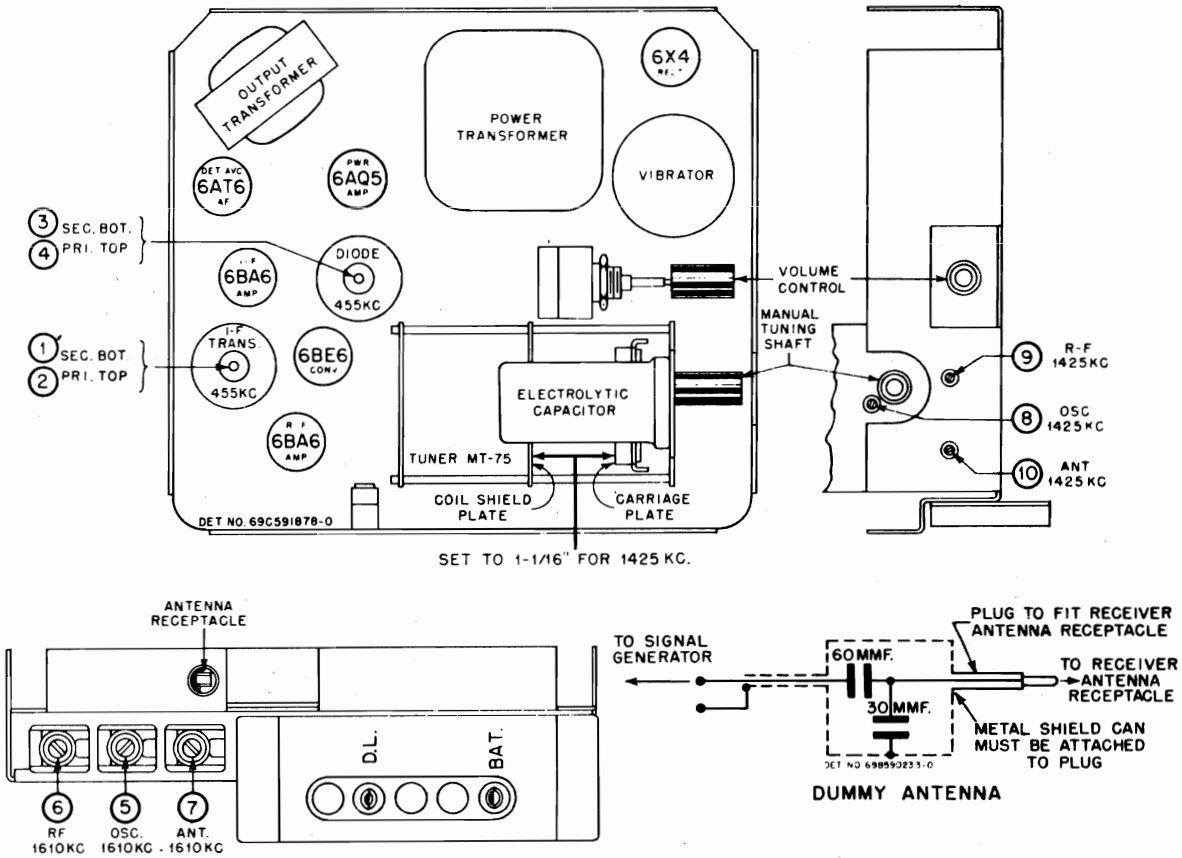

FIGURE 1. TUBE & TRIMMER LOCATIONS AND DUMMY ANTENNA

©John F. Rider

Compliments of www.nucow.com

MODEL 500

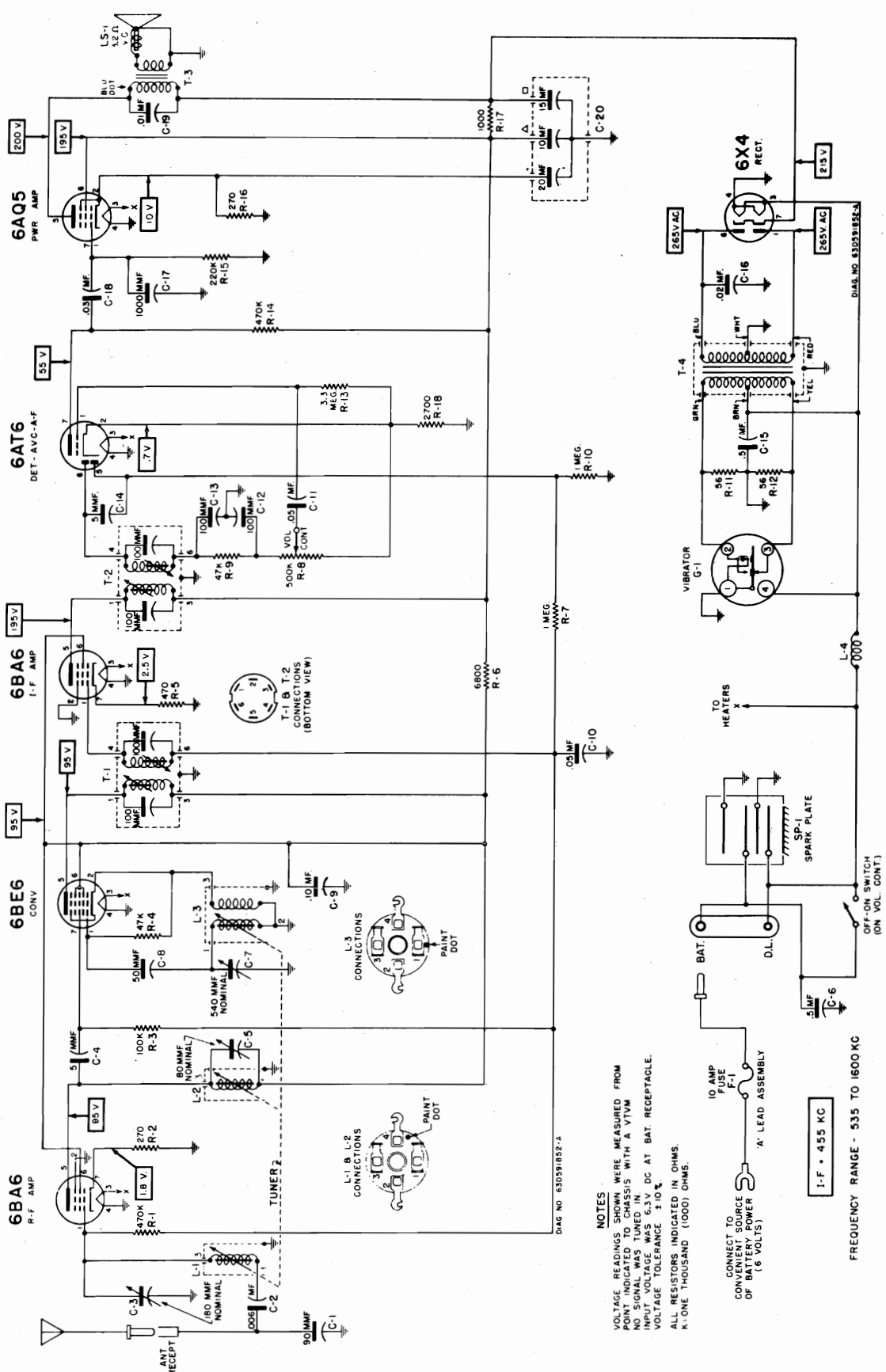

FIGURE 2. SCHEMATIC DIAGRAM

©John F. Rider

Compliments of www.nucow.com

GENERAL INFORMATION

TYPE - Compact automotive type superheterodyne receiver designed for installation in any car when used with appropriate Motorola control head and speaker.

TUNING RANGE - 535 to 1600 Kc IF - 455 Kc

TUBE COMPLEMENT - 6BA6 - RF Amplifier
6BE6 - Converter
6BA6 - IF Amplifier
6AT6 - Det, AVC & AF Amp
6AQ5 - Power Amplifier
6X4 - Rectifier

POWER INPUT - 6.8 amps at 6.3 volts

POWER OUTPUT - 3.5 watts (max)

REPLACEMENT PARTS LIST

REF. NO.	PART NO.	DESCRIPTION
CHASSIS PARTS - ELECTRICAL		
CAPACITORS		
C-1	21A591682	Ceramic: 90 mmf 500V .....
C-2	8C4529	Paper: .006 mf 100V .....
C-3	20K592078	Trimmer, variable: 50 to 280 mmf; on same bracket as C-5 and C-8 (sold only as assembly) .....
C-4	8R13166	Paper: .1 mf 400V .....
C-5	20K592078	Trimmer, variable: 20 to 180 mmf; on same bracket as C-3 and C-8 (sold only as assembly).....
C-6	21K70720	Molded: 5 mmf 500V .....
C-7	21R6513	Mica: 50 mmf 10% 300V .....
C-8	20K592078	Trimmer, variable: 500 to 580 mmf; on same bracket as C-3 and C-5 (sold only as assembly) .....
C-9	8K17028	Paper: .5 mf 100V .....
C-10	8R13514	Paper: .05 mf 100V .....
C-11	8R13514	Paper: .05 mf 100V .....
C-12	21B77562	Ceramic: 100 mmf 500V .....
C-13	21B77562	Ceramic: 100 mmf 500V .....
C-14	21K70720	Molded: 5 mmf 500V .....
C-15	8K17028	Paper: .5 mf 100V .....
C-16	8R490449	Paper: .02 mf 1000V .....
C-17	21K478410	Ceramic: 1000 mmf 500V .....
C-18	8R71911	Paper: .03 mf 400V .....
C-19	8R23690	Paper: .01 mf 400V .....
C-20	23A485677	Electrolytic: 15-10-20 mf/350-350-25V .....

REF. NO.	PART NO.	DESCRIPTION
FUSE		
F-1	65A10266	10 Amp (3AG) .....
VIBRATOR		
G-1	48B3333	Non-sync: 4-pin .....
COILS		
L-1,2	24B591664	RF and Antenna Coil (specify color of paint dots on old coil when ordering) .....
L-3	24B592153	Oscillator Coil (specify color of paint dots on old coil when ordering) .....
L-4,5	24K78026	Choke, RF .....
L-6	24A472535	Choke, hash .....
RESISTORS		
Note:		All resistors are insulated carbon type, 20% unless otherwise specified.
R-1	6R6032	470,000 1/2W .....
R-2	6R6432	270 10% 1/2W .....
R-3	6R6075	100,000 1/2W .....
R-4	6R6056	47,000 1/2W .....
R-5	6R6090	470 10% 1/2W .....
R-6	6R6287	6800 1W N.I. .....
R-7	6R6004	1 meg 1/2W .....
R-8	1A472531	Volume Control: 500,000 ohms; includes SPST switch .....

©John F. Rider

Compliments of www.nucow.com

MODEL 600

PART NUMBER		DESCRIPTION
R-9	6R6056	47,000 1/2W .....
R-10	6R6004	1 meg 1/2W .....
R-11	6R5614	56 10% 1/2W .....
R-12	6R5614	56 10% 1/2W .....
R-13	6R5577	2700 10% 1/2W .....
R-14	6R2118	3.3 meg 1/2W .....
R-15	6R6032	470,000 1/2W .....
R-16	6R6015	220,000 1/2W .....
R-17	6R6336	270 10% 1W .....
R-18	6R6184	1000 1W N.I .....

SPARK PLATE

SP-1	1X78041	Spark Plate Assembly: complete..

TRANSFORMERS

T-1,2	24B485670	Diode or IF, 455 Kc: complete with tuning cores and padding capacitors but less shield ...
T-3	25B70171	Output Transformer .....
T-4	25B472533	Power Transformer .....

REF. NO.	PART NO.	DESCRIPTION
CHASSIS PARTS - MECHANICAL		
	42A13177	Clip, center post grounding .....
	42A4215	Clip, vibrator grounding .....
	4S7695	Lockwasher, int: #5; stl; cad pl (terminal strip mtg) .....
	4S7671	Lockwasher, split: #8; stl; cad pl (spark plate mtg) .....
	9A472148	Receptacle, antenna .....
	5S7771	Rivet: .088 x 3/16 steel; nkl pl (tube socket mtg) .....
	5S7706	Rivet: .122 x 1/8; steel; nkl pl (sensitivity control and center post ground clip mtg) .....
	5S7707	Rivet: .122 x 5/32; stl; nkl pl (terminal strip and output trans mtg) .....
	5S7701	Rivet: .122 x 3/16; stl; nkl pl (vibrator grounding clip and output transformer mtg) .....
	3S8140	Screw, sheet metal: #8 x 3/16 PKZ plain hex head; cad pl (tuner mtg)
	3S7454	Screw, sheet metal: #8 x 1/4 plain hex head; stl; cad pl (capacitor bracket assembly and spark plate mtg) .....
	3S3397	Screw, sheet metal: #8 x 5/16 PKZ plain hex head; cad pl (power transformer mtg) .....
	26K485936	Shield (for T-1 & T-2).....
	9A70208	Socket, tube: 4-pin; with grounding lug (vibrator socket) .....
	9A472534	Socket, tube: miniature; 7-prong...
	9K580218	Socket, tube: miniature; 8-prong ..
	31C4079	Strip, terminal: 1 insulated lug, end mtg .....
	31A472573	Strip, terminal: 2 insulated lugs, #2 mtg .....
	31K16330	Strip, terminal: 3 insulated lugs, #3 mtg .....

REF. NO.	PART NO.	DESCRIPTION
HOUSING PARTS		
	42A472033	Clip, chassis retainer .....
	13C592086	Escutcheon, complete .....
	1X592087	Housing and Bushing Assembly, rear .
	1X592088	Housing, front; with escutcheon ....
	3S7456	Screw, sheet metal: #8 x 1/4 PKA slotted acorn head; antique copper finish (escutcheon mtg and housing screws) .....
ACCESSORIES		
	65X4151	Bulb, pilot light: 6-8V; clear; bayonet base .....
	8A4491	Capacitor, generator .....
	9B473111	Lead Assembly, fuse: complete with 10 amp fuse .....
	1X74340	Lead Assembly, dial light: complete with bulb .....
	1X76859	Lead Assembly, speaker: 2-conductor, 36" long, with pin terminals on one end
	4S7658	Lockwasher, int-ext: 5/16; stl; cad pl (receiver mtg) .....
	2S2863	Nut, hex: 5/16-18 x 9/16; cad pl (receiver mtg) .....
	1K75148	Shaft, flexible: with housing; 24" long .....
	50B592352	Speaker: 6" PM; 3.2 ohm VC; less speaker lead .....
	3A77542	Stud, receiver mtg .....
	6X4141	Suppressor, distributor .....
TUNER PARTS - MECHANICAL		

Note: Electrical parts of the tuner are included in the Electrical Chassis Parts List

	1X592301	Manual Tuner MT-75 .....
	1X592099	Base, Sleeve, Shields and Channels Assembly .....
	1X78034	Carriage Plate, Slug Insulator and Center Guide Rod Assembly .....
	42A70184	Clip, core adjustment .....
	46K592080	Core, iron and screw .....
	58K78012	Coupling, manual lead screw .....
	14B78007	Insulator, slug: bakelite .....
	2A77596	Nut, floating: without ear (on manual lead screw) .....
	2A78005	Nut, floating: with ear (on manual lead screw) .....
	64A77593	Plate, tuner front .....
	5S7770	Rivet: .088 x 5/32; stl; nkl pl (slug insulator mtg) .....
	47A78002	Rod, carriage guide .....
	3S7352	Screw, machine: #8-32 x 2 slotted round head; stl; cad pl (front plate mtg)
	43A70881	Sleeve, coil (iron) .....
	41A77595	Spring, coil slug .....
	41A77592	Spring, compression .....
	42A21577	Washer, 'C': spring (manual lead screw mtg) .....
	4A70873	Washer, coil spacer .....
	4A74571	Washer, fishpaper .....
	4A70956	Washer, slug insulator .....
	4K485653	Washer, spring (manual lead screw mtg) .....

©John F. Rider

Compliments of www.nucow.com

ALIGNMENT

Remove receiver front and rear housings to expose all adjustments.

Connect a 6 volt battery to BAT terminal and chassis.

Connect a low range output meter across speaker voice coil and set volume control at maximum. For greatest accuracy, keep output of receiver at approximately 1 watt (1 watt = 1.79 volts on output meter) throughout alignment by reducing signal generator output as stages are brought into alignment. Use a small fibre screwdriver when aligning IF and diode transformers. A special tool, Motorola Part No. 66A76278, is required for adjusting the tuner cores. IMPORTANT: Do not push in on the alignment tool when adjusting the tuner cores; the slightest inward pressure may move tuner carriage and result in inaccurate alignment.

STEP	DUMMY ANTENNA	GENERATOR CONNECTION	GENERATOR FREQUENCY	TUNER SET TO	ADJUST	REMARKS
IF ALIGNMENT						
1.	.1 mf	6BE6 grid (pin #7) & chassis	455 Kc	High frequency end (cores out)	1, 2, 3 & 4	Peak for maximum in order indicated. Check by repeating step.
RF ALIGNMENT						
2.	See Fig. 1	Antenna receptacle through dummy	1610 Kc	High frequency end cores should project 1-1/8" from cans. (Screw out if necessary)	5, 6 & 7	Peak for maximum in order indicated.
3.	"	"	1425 Kc	1425 Kc per Fig. 1	8, 9, & 10	Peak for maximum in order indicated.

4. When receiver is installed in car, extend antenna fully, set dial to approximately 1400 Kc and repeak antenna trimmer (7) for maximum volume of a weak station or noise between stations.

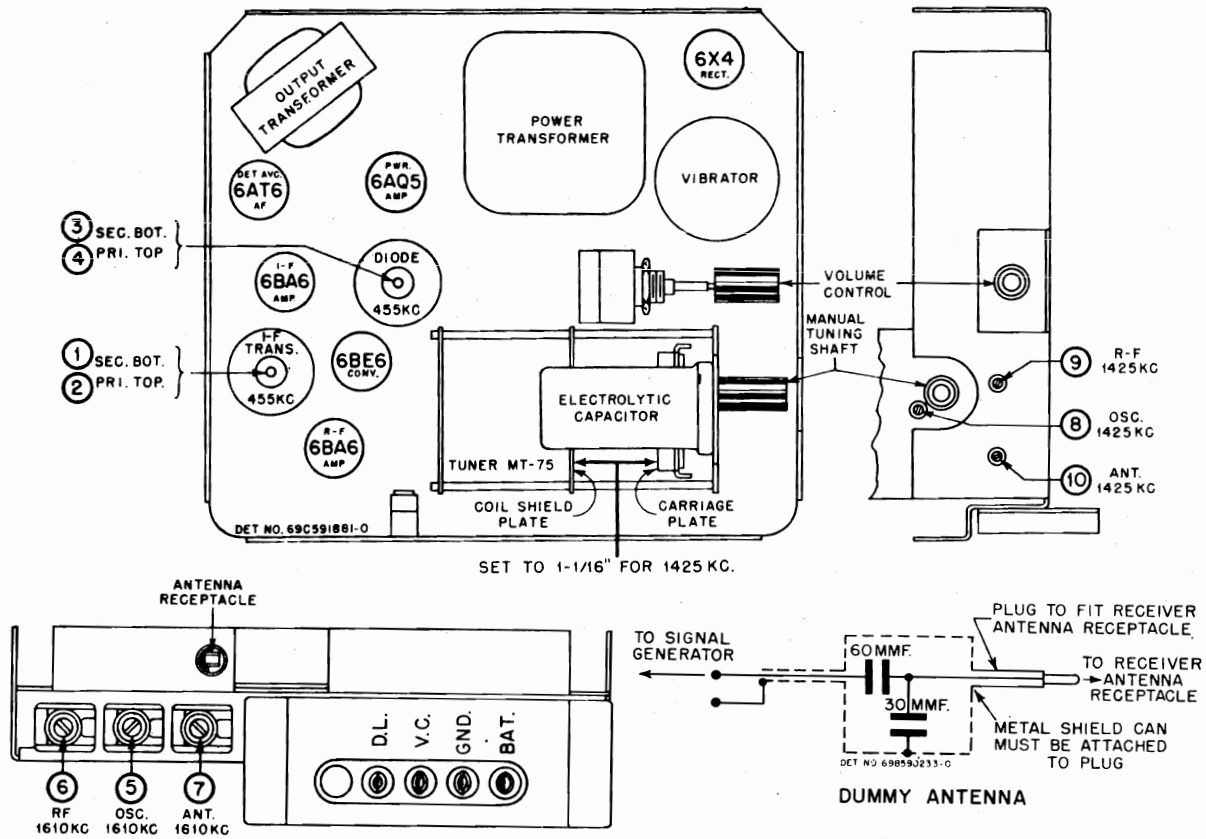

FIGURE 1. TUBE & TRIMMER LOCATIONS AND DUMMY ANTENNA

©John F. Rider

Compliments of www.nucow.com

MODEL 600

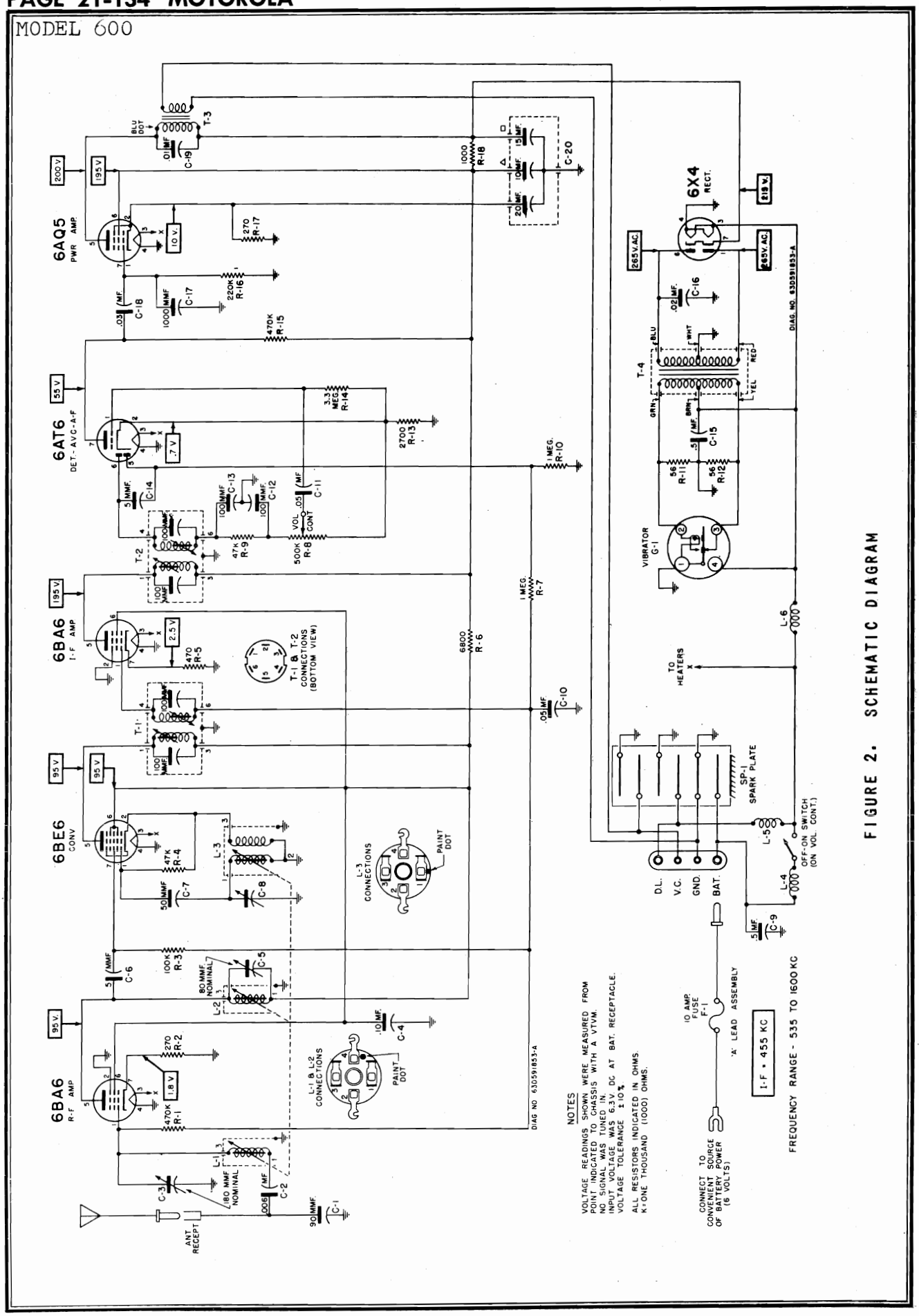

FIGURE 2. SCHEMATIC DIAGRAM

©John F. Rider

Compliments of www.nucow.com

MODEL 700

GENERAL INFORMATION

TYPE -

Compact two-piece automotive type superheterodyne receiver. Receiver consists of a tuning unit and audio & power unit which are connected together by means of an interconnecting cable. This receiver is designed for installation in any car by using with appropriate Motorola control head and speaker kit.

TUNING RANGE - 535 to 1600 Kc

IF - 455 Kc

TUBE COMPLEMENT -

Tuner Unit	Audio & Power Unit
6BA6 - RF Amplifier	6AQ5 - Power Amplifier
6BE6 - Converter	6X4 - Rectifier
6BA6 - IF Amplifier	
6AT6 - Det-AVC-AF Amp	

POWER INPUT - 7.0 amps at 6.3 volts

POWER OUTPUT - 3.5 watts (max)

REPLACEMENT PARTS LIST

REF. NO.	PART NO.	DESCRIPTION
TUNER UNIT		
CHASSIS PARTS - ELECTRICAL		
CAPACITORS		
C-1	21B77562	Ceramic: 100 mmf 500V
C-2	8A4529	Paper: .006 mf 100V
C-3	20A592135	Variable, trimmer: 50 to 280 mmf; includes bracket
C-4*	20K481527	Variable, trimmer: 20 to 180 mmf; includes bracket
C-5	21K70720	Molded: 5 mmf 500V
C-6	21K74661	Ceramic: 50 mmf 300V
C-7	21K592327	Ceramic: 500 mmf 5% 500V
C-8*	20K472612	Variable, trimmer: 50 to 80 mmf; includes bracket
C-9	8R13166	Paper: .1 mf 400V
C-10	8A13514	Paper: .05 mf 100V
C-11	8A4529	Paper: .006 mf 100V
C-12	21K70720	Molded: 5 mmf 500V
C-13	8R472035	Paper: .1 mf 100V
C-14	21R6638	Mica: 1000 mmf 500V
C-15	8K17028	Paper: .5 mf 100V
C-16	8K71910	Paper: .006 mf 400V
PILOT LIGHT		
I-1	65X4151	Bulb: 6-8V; bayonet base; type #51
COILS		
L-1,2*	24B71881	RF & Antenna Coil (specify color of paint dot on old coil when ordering)

*Part of Solenoid Tuner ST-78

©John F. Rider

Compliments of www.nucow.com

MODEL 700

REF. NO.	PART NO.	DESCRIPTION
L-3*	24B592153	Oscillator Coil (specify color of paint dot on old coil when ordering)
L-4,5	24K592269	Choke, RF
RESISTORS		
		Note: All resistors are carbon insulated type unless otherwise specified.
R-1	6R6032	470,000 20% 1/2W
R-2	17K484497	Wirewound: 5.6
or	6R488139	5.6 10% 1W
R-3	6R6090	470 10% 1/2W
R-4	6R6075	100,000 20% 1/2W
R-5	6R6056	47,000 20% 1/2W
R-6	6R6090	470 10% 1/2W
R-7	6R6004	1 meg 20% 1/2W
R-8	6R6287	6800 20% 1W N.I.
R-9	1A472531	Volume Control and Shaft Assembly: .5 meg.
R-10	6R6056	47,000 20% 1/2W
R-11	6R6004	1 meg 20% 1/2W
R-12	6R5290	2200 20% 1/2W
R-13	6R3927	2.2 meg 20% 1/2W
R-14	6R2109	10 meg 20% 1/2W
R-15	6R6056	47,000 20% 1/2W
R-16	6R6032	470,000 20% 1/2W
SWITCHES		
S-1*	1B70944	Solenoid Switch
S-2*	40B70952	Selector Switch
S-3*	40A472644	Mute Switch
S-4	1X592220	Tone Relay MR-7
SPARK PLATE		
SP-1	1B592133	Spark Plate Assembly
TRANSFORMERS		
T-1	24B485553	IF, 455 Kc: complete with tuning cores and padding capacitors
T-2	24K485555	Diode, 455 Kc: complete with tuning cores and padding capacitors
TUNER		
	1X592280	Solenoid Tuner ST-78

POWER & AUDIO UNIT

CHASSIS PARTS - ELECTRICAL

CAPACITORS		
C-17	8K17028	Paper: .5 mf 100V
C-18	8K12840	Paper: .006 mf 1600V
C-19	8R71911	Paper: .03 mf 400V
C-20	23A473015	Electrolytic: 30-30-20 mf/350-300-25V
C-21	8K71910	Paper: .006 mf 400V
FUSE		
F-1	65K4637	Fuse: 20 amp
VIBRATOR		
G-1	48B3333	Vibrator, non-sync: 4-pin
COILS		
L-6	24A472535	Choke, hash
RESISTORS		
		Note: All resistors are carbon insulated type unless otherwise specified.
R-17	6R5614	56 10% 1/2W
R-18	6R5614	56 10% 1/2W
R-19	6R3949	470 20% 1/2W
R-20	6R6054	10,000 20% 1/2W
R-21	6R6015	220,000 20% 1/2W
R-22	6R6336	270 10% 1W
R-23	6R6184	1000 20% 1W N.I.
TRANSFORMERS		
T-3	25K590650	Power Transformer
T-4	25B70171	Output Transformer

*Part of Solenoid Tuner ST-78

PART NUMBER	DESCRIPTION

TUNER UNIT

CHASSIS PARTS - MECHANICAL

7A592127	Bracket, volume control mtg
42A485548	Clip, coil can mtg
4S7657	Lockwasher, ext: #8; stl; cad pl (tone relay mtg)
2S7000	Nut, hex: 8-32 x 5/16; stl; cad pl (tone relay mtg)
1X70646	Receptacle, antenna
5S7771	Rivet: .088 x 3/16; stl; nkl pl (tube socket mtg)
5S7719	Rivet: .088 x 5/32; stl; nkl pl (terminal strip mtg)
5S7728	Rivet: .122 x 5/16; stl; nkl pl (spark plate mtg)
3S7152	Screw, machine: 6-32 x 1/4 plain hex head; stl; cad pl (volume control bracket mtg)
3S7454	Screw, sheet metal: #8 x 1/4; PKZ plain hex head; stl; cad pl (capacitor bracket and tuner mtg)
9A472534	Socket, tube: 7-prong; miniature
9K580218	Socket, tube: 8-prong; miniature
31A41318	Strip, terminal: 1 insulated lug, #2 mtg

POWER & AUDIO UNIT

CHASSIS PARTS - MECHANICAL

1X592233	Cable and Plug Assembly: includes fuse lead, power cable and plug
42A4215	Clip, vibrator grounding
14A592132	Insulator, connector plug
9K592237	Lead Assembly, fuse: includes 'A' lead and fuse receptacle
1X76859	Lead Assembly, speaker
4S7666	Lockwasher, ext: #6; stl; cad pl (power transformer mtg)
29R5238	Lug, solder: #6L
2S7005	Nut, hex: 6-32 x 1/4; stl; cad pl (power transformer mtg)
5S7771	Rivet: .088 x 3/16; stl; nkl pl (tube socket mtg)
5S7706	Rivet: .122 x 1/8; stl; nkl pl (terminal strip mtg)
5S7701	Rivet: .122 x 3/16; stl; nkl pl (vibrator clip mtg)
28A592119	Plug, connector: 4-pin
28K71775	Plug, insulated
9A472534	Socket, tube: miniature; 7-prong
9A70208	Socket, tube: 4-pin (for vibrator)
31K490143	Strip, terminal: 2 insulated lugs, #2 mtg; 1-1/8" long
31A592258	Strip, terminal: 2 insulated lugs, #2 mtg; 1-3/8" long
29K5405	Terminal, insulated pin: black (on speaker leads)
29K5407	Terminal, insulated pin: white (on spkr leads)

HOUSING PARTS

38A71874	Button, push: includes spring clamp
15C592123	Cover, bottom
13C592121	Escutcheon
1X592241	Housing and Escutcheon Assembly (Tuner Unit)
1X592242	Housing and Escutcheon Assembly (Power & Audio
3S488012	Screw, sheet metal: #6 x 1/4; Shakeproof #25; plain hex head; stl; cad pl (escutcheon mtg)
3S7454	Screw, sheet metal: #8 x 1/4 PKZ plain hex head; stl; cad pl (bottom cover mtg)
3S8114	Screw, sheet metal: #8 x 1/4 PKZ slotted acorn head; antique copper finish (housing screws)

ACCESSORIES

8A4491	Capacitor, generator
4S7653	Lockwasher, int-ext: 5/16; stl; cad pl (receiver mtg)
2S2863	Nut, hex: 5/16; stl; cad pl (receiver mtg)
1K75148	Shaft and Housing Assembly, flexible 24" long
50R592351	Speaker, PM: 6"; 3.2 ohm VC
6A4141	Suppressor, distributor

©John F. Rider

Compliments of www.nucow.com

ALIGNMENT

MODEL 700

Remove tuner unit front housing and bottom cover to expose all alignment adjustments. Connect power and audio unit to tuner unit. Connect a 6 volt battery to 'A' lead and power & audio unit chassis.

Connect a low range output meter across speaker voice coil and set volume control at maximum.

Place tuner in manual position, either by actuating carriage plate manually or by connecting a control head to receiver and pressing 'M' button.

For greatest accuracy, keep output of receiver at approximately 1 watt (1 watt = 1.79 volts on output meter) throughout alignment by reducing generator output as stages are brought into alignment. Use a small fibre screwdriver when aligning IF and diode transformers. A special tool, Motorola Part Number 66A76278, is required for adjusting the tuner cores.

IMPORTANT: Do not push in on the alignment tool when adjusting tuner cores; the slightest inward pressure may move tuner carriage and result in inaccurate alignment.

STEP	DUMMY ANTENNA	GENERATOR CONNECTION	GENERATOR FREQUENCY	TUNER SET TO	ADJUST	REMARKS
IF ALIGNMENT						
1.	.1 mf	6BE6 grid (pin #7) & chassis	455 Kc	High frequency end (cores out)	1, 2, 3 & 4	Peak for maximum in order indicated. Check by repeating step.
RF ALIGNMENT						
2.	See Fig. 1	Antenna receptacle through dummy	1610 Kc	High frequency end; cores should project 1-1/8" from cans (Screw out if necessary)	5, 6, & 7	Peak for maximum in order indicated.
3.	"	"	1425 Kc	1425 Kc-per Fig. 1	8, 9, & 10	Peak for maximum in order indicated.

4. When receiver is installed in car, extend antenna fully, set dial to approximately 1400 Kc and repeak antenna trimmer (7) for maximum volume of a weak station or noise between stations.

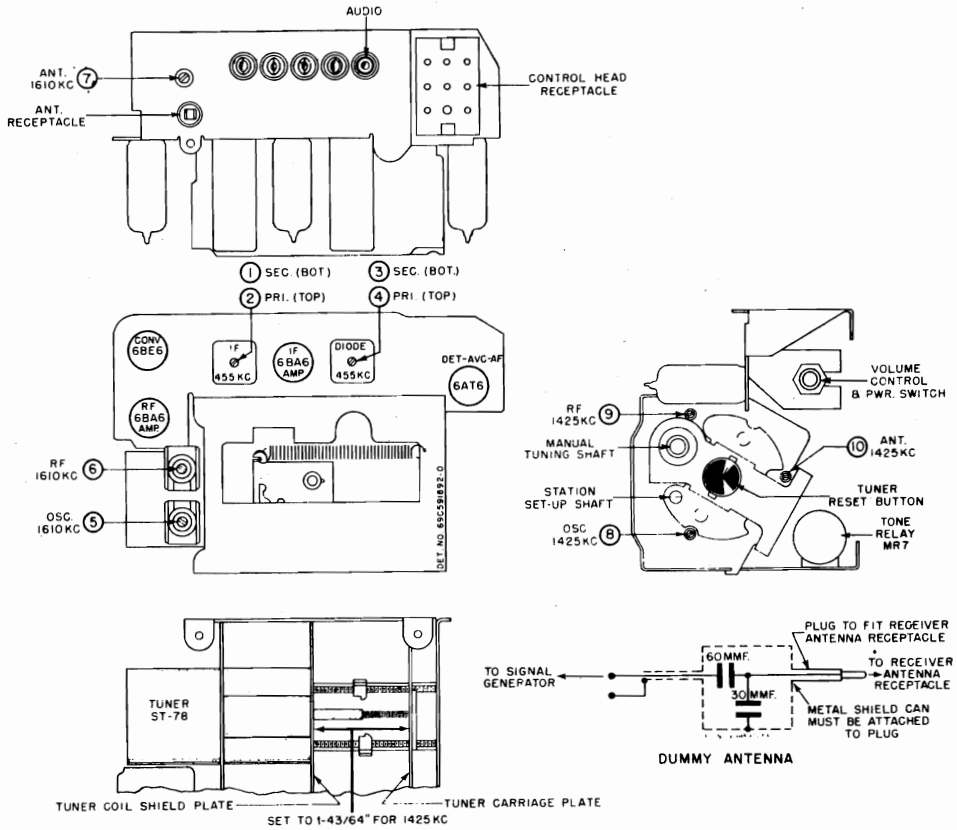

FIGURE 1. TUBE & TRIMMER LOCATIONS AND DUMMY ANTENNA

©John F. Rider

Compliments of www.nucow.com

MODEL 700

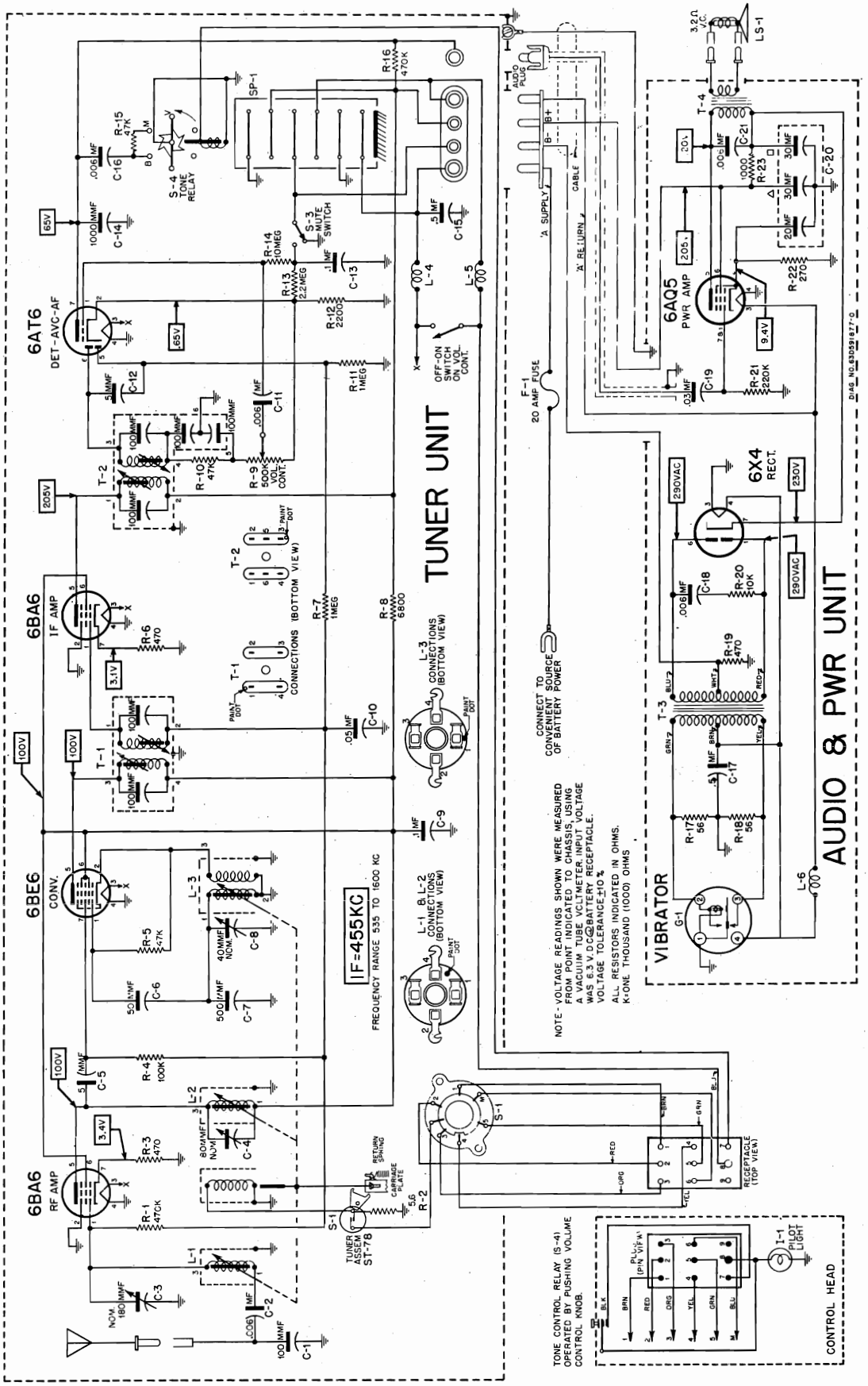

FIGURE 2. SCHEMATIC DIAGRAM

©John F. Rider

Compliments of www.nucow.com

MODEL 800

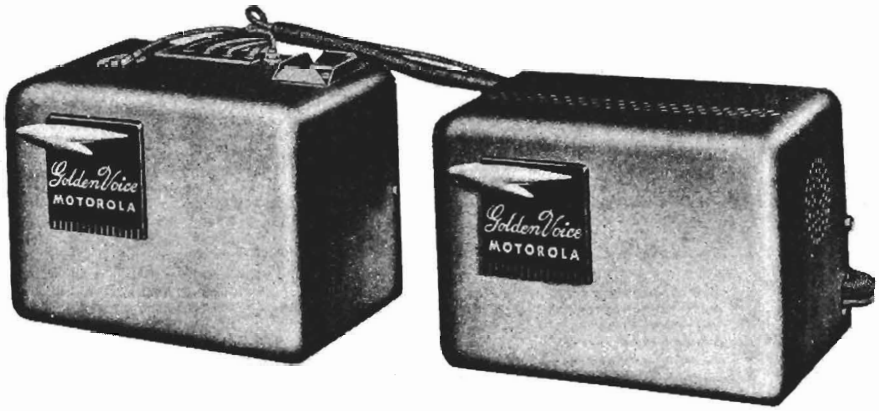

GENERAL INFORMATION

TYPE -
Compact two-piece automotive type superheterodyne receiver. Receiver consists of a tuning unit and audio & power unit which are connected together by means of an interconnecting cable. This receiver is designed for installation in any car by using with appropriate Motorola control head and speaker kit.

TUNING RANGE - 535 to 1600 Kc IF - 455 Kc

TUBE COMPLEMENT -

Tuner Unit	Audio & Power Unit
6BA6 - RF Amplifier	6AT6 - Audio Inverter
6BE6 - Converter	6AQ5 - Power Amplifier
6BA6 - IF Amplifier	6AQ5 - Power Amplifier
6AT6 - Det-AVC-AF Amp	6X4 - Rectifier

POWER INPUT - 8.2 amps at 6.3 volts POWER OUTPUT - 4.5 watts (max)

REPLACEMENT PARTS LIST

REF. NO.	PART NO.	DESCRIPTION
TUNER UNIT -		
CHASSIS PARTS - ELECTRICAL		
CAPACITORS		
C-1	21B77562	Ceramic: 100 mmf 500V
C-2	8A4529	Paper: .006 mf 100V
C-3	20A592135	Variable, trimmer: 50 to 280 mmf; includes bracket
C-4*	20K481527	Variable, trimmer: 20 to 180 mmf; includes bracket
C-5	21K70720	Molded: 5 mmf 500V
C-6	21K74661	Ceramic: 50 mmf 300V
C-7	21K592327	Ceramic: 500 mmf 5% 500V
C-8*	20K472612	Variable, trimmer: 50 to 80 mmf; includes bracket
C-9	8R13166	Paper: .1 mf 400V
C-10	8A13514	Paper: .05 mf 100V
C-11	8A4529	Paper: .006 mf 100V
C-12	21K70720	Molded: 5 mmf 500V
C-13	8R472035	Paper: .1 mf 100V
C-14	21R6638	Mica: 1000 mmf 500V
C-15	8K17028	Paper: .5 mf 100V
C-16	8K71910	Paper: .006 mf 400V
PILOT LIGHT		
I-1	65X4151	Bulb: 6-8V; bayonet base; type #51
COILS		
L-1,2*	24B71881	RF & Antenna Coil (specify color of paint dot on old coil when ordering)
L-3*	24B592153	Oscillator Coil (specify color of paint dot on old coil when ordering)
L-4,5	24K592269	Choke, RF

*Part of Solenoid Tuner ST-78

©John F. Rider

Compliments of www.nucow.com

MODEL 800

REF. NO.	PART NO.	DESCRIPTION
RESISTORS		
		Note: All resistors are carbon insulated type unless otherwise specified.
R-1	6R6032	470,000 20% 1/2W
R-2	17K484497	Wirewound: 5.6
or	6R488139	5.6 10% 1W
R-3	6R6090	470 10% 1/2W
R-4	6R6075	100,000 20% 1/2W
R-5	6R6056	47,000 20% 1/2W
R-6	6R6090	470 10% 1/2W
R-7	6R6004	1 meg 20% 1/2W
R-8	6R6287	6800 20% 1W N.I.
R-9	1A472531	Volume Control and Shaft Assembly: .5 meg...
R-10	6R6056	47,000 20% 1/2W
R-11	6R6004	1 meg 20% 1/2W
R-12	6R6290	2200 20% 1/2W
R-13	6R3927	2.2 meg 20% 1/2W
R-14	6R2109	10 meg 20% 1/2W
R-15	6R6056	47,000 20% 1/2W
R-16	6R6032	470,000 20% 1/2W
SWITCHES		
S-1*	1B70944	Solenoid Switch
S-2*	40B70952	Selector Switch
S-3*	40A472644	Mute Switch
S-4	1X592220	Tone Relay MR-7
SPARK PLATE		
SP-1	1B592133	Spark Plate Assembly
TRANSFORMERS		
T-1	24B485553	IF, 455 Kc: complete with tuning cores and padding capacitors
T-2	24K485555	Diode, 455 Kc: complete with tuning cores and padding capacitors
TUNER		
	1X592280	Solenoid Tuner ST-78

POWER & AUDIO UNIT

CHASSIS PARTS - ELECTRICAL

CAPACITORS		
C-17	8K17028	Paper: .5 mf 100V
C-18	8K12840	Paper: .006 mf 1600V
C-19	23A473015	Electrical: 30-30-20 mf/350-300-25V
C-20	8R71911	Paper: .03 mf 400V
C-21	8R71911	Paper: .03 mf 400V
C-22	8R13165	Paper: .003 mf 1000V
FUSE		
F-1	65K4637	Fuse, 20 amp
VIBRATOR		
G-1	48B3333	Vibrator, non-sync: 4-pin
COILS		
L-6	24A472535	Choke, hash
RESISTORS		
		Note: All resistors are carbon insulated type unless otherwise specified.
R-17	6R5614	56 10% 1/2W
R-18	6R5614	56 10% 1/2W
R-19	6R3949	470 20% 1/2W
R-20	6R6054	10,000 20% 1/2W
R-21	6R6286	1500 20% 1W N.I.
R-22	6R6069	2200 10% 1/2W
R-23	6R6015	220,000 20% 1/2W
R-24	6R6015	220,000 20% 1/2W
R-25	6R6054	10,000 20% 1/2W
R-26	6R6336	270 10% 1W
R-27	6R6015	220,000 20% 1/2W
TRANSFORMERS		
T-3	25K590650	Power Transformer
T-4	25K472558	Output Transformer

* Part of Solenoid Tuner ST-78

PART NUMBER	DESCRIPTION
TUNER UNIT	
CHASSIS PARTS - MECHANICAL	
7A592127	Bracket, volume control mtg
42A485548	Clip, coil can mtg
4S7657	Lockwasher, ext: #8; stl; cad pl (tone relay mtg)
2S7000	Nut, hex: 8-32 x 5/16; stl; cad pl (tone relay mtg)
1X70646	Receptacle, antenna
5S7719	Rivet: .088 x 5/32; stl; nkl pl (terminal strip mtg)
5S7771	Rivet: .088 x 3/16; stl; nkl pl (tube socket mtg)
5S7728	Rivet: .122 x 5/16; stl; nkl pl (spark plate mtg)
3S7152	Screw, machine: 6-32 x 1/4 plain hex head; stl; cad pl (volume control brkt mtg)
3S7454	Screw, sheet metal: #8 x 1/4 PKZ plain hex head; stl; cad pl (capacitor brkt & tuner mtg)...
9A472534	Socket, tube: 7-prong; miniature
9K580218	Socket, tube: 8-prong; miniature
31A41318	Strip, terminal: 1 insulated lug, #2 mtg
POWER & AUDIO UNIT	
CHASSIS PARTS - MECHANICAL	
1X592233	Cable and Plug Assembly: includes fuse lead, power cable and plug
42A4215	Clip, vibrator grounding
14A592132	Insulator, connector plug
9K592237	Lead Assembly, fuse: includes 'A' lead and fuse receptacle
1X76859	Lead Assembly, speaker
4S7666	Lockwasher, ext: #6; stl; cad pl (power transformer mtg)
29R5238	Lug, solder: #6L
2S7005	Nut, hex: 6-32 x 1/4; stl; cad pl (power transformer mtg)
5S7771	Rivet: .088 x 3/16; stl; nkl pl (tube socket mtg)
5S7706	Rivet: .122 x 1/8; stl; nkl pl (terminal strip mtg)
5S7701	Rivet: .122 x 3/16; stl; nkl pl (vibrator clip mtg)
28A592119	Plug, connector: 4-pin
28K71775	Plug, insulated
9A472534	Socket, tube: miniature; 7-prong
9A70208	Socket, tube: 4-pin (for vibrator)
31K490143	Strip, terminal: 2 insulated lugs, #2 mtg; 1-1/8" long
31A592258	Strip, terminal: 2 insulated lugs, #2 mtg; 1-3/8" long
29K5405	Terminal, insulated pin: black (on speaker leads).
29K5407	Terminal, insulated pin: white (on speaker leads).
HOUSING PARTS	
38A71874	Button, push
15C592123	Cover, bottom
13C592122	Escutcheon (golden voice)
1X592321	Housing and Escutcheon Assembly (Power & Audio
1X592325	Housing and Escutcheon Assembly (Tuner Unit)..
3S488012	Screw, sheet metal: #6 x 1/4; Shakeproof #25; plain hex head; stl; cad pl (escutcheon mtg).
3S7454	Screw, sheet metal: #8 x 1/4 PKZ plain hex head; stl; cad pl (bottom cover mtg)
3S8114	Screw, sheet metal: #8 x 1/4 PKZ slotted acor head; antique copper finish (housing screws)
ACCESSORIES	
8A4491	Capacitor, generator
4S7653	Lockwasher, int-ext: 5/16; stl; cad pl (receiver mtg)
2S2863	Nut, hex: 5/16; stl; cad pl (receiver mtg) ...
1K75148	Shaft and Housing Assembly, flexible 24" long.
50B592351	Speaker, PM: 6"; 3.2 ohm VC
6A4141	Suppressor, distributor

©John F. Rider

Compliments of www.nucow.com

ALIGNMENT

MODEL 300

Remove tuner unit front housing and bottom cover to expose all alignment adjustments. Connect power and audio unit to tuner unit. Connect a 6 volt battery to 'A' lead and power & audio unit chassis.

Connect a low range output meter across speaker voice coil and set volume control at maximum.

Place tuner in manual position, either by actuating carriage plate manually or by connecting a control head to receiver and pressing 'M' button.

For greatest accuracy, keep output of receiver at approximately 1 watt (1 watt = 1.79 volts on output meter) throughout alignment by reducing signal generator output as stages are brought into alignment. Use a small fibre screwdriver when aligning IF and diode transformers. A special tool, Motorola Part Number 66A76278, is required for adjusting the tuner cores.

IMPORTANT: Do not push in on the alignment tool when aligning the tuner cores; the slightest inward pressure may move tuner carriage and result in inaccurate alignment.

STEP	DUMMY ANTENNA	GENERATOR CONNECTION	GENERATOR FREQUENCY	TUNER SET TO	ADJUST	REMARKS
IF ALIGNMENT						
1.	.1 mf	6BE6 grid (pin #7) & chassis	455 Kc	High frequency end (cores out)	1, 2, 3 & 4	Peak for maximum in order indicated. Check by repeating step.
RF ALIGNMENT						
2.	See Fig. 1	Antenna receptacle through dummy	1610 Kc	High frequency end; cores should project 1-1/8" from cans (Screw out if necessary)	5, 6, & 7	Peak for maximum in order indicated.
3.	"	"	1425 Kc	1425 Kc-per Fig. 1	8, 9, & 10	Peak for maximum in order indicated.

4. When receiver is installed in car, extend antenna fully, set dial to approximately 1400 Kc and repeak antenna trimmer (7) for maximum volume of a weak station or noise between stations.

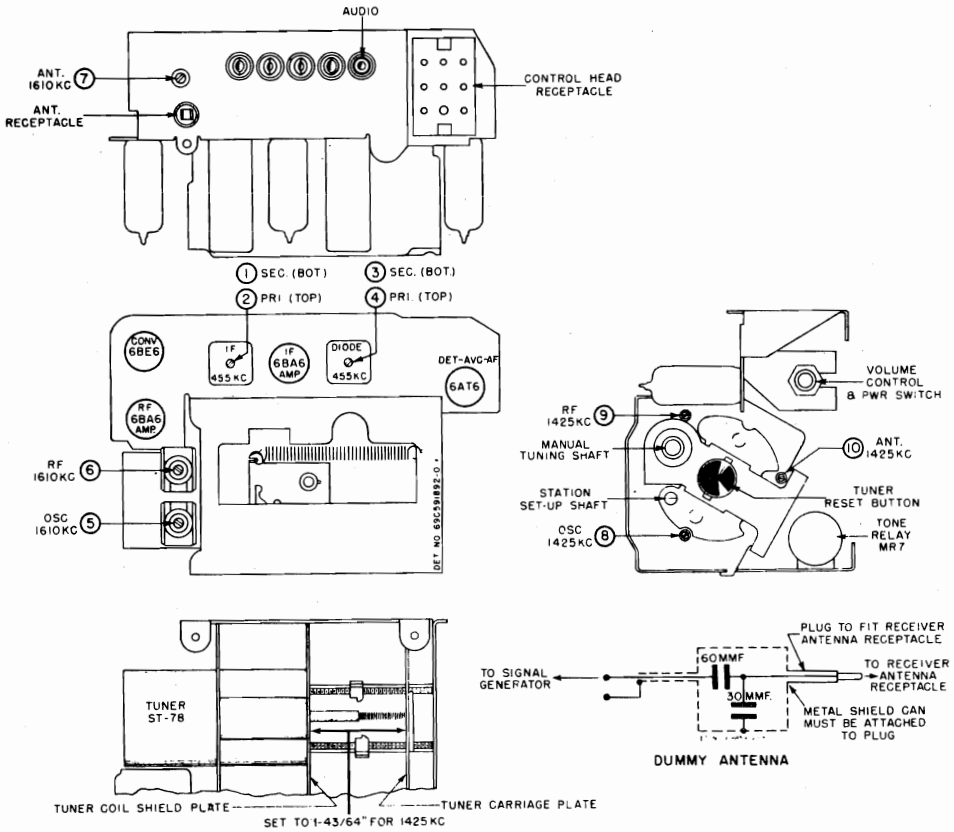

FIGURE 1. TUBE & TRIMMER LOCATIONS AND DUMMY ANTENNA

©John F. Rider

Compliments of www.nucow.com

MODEL 800

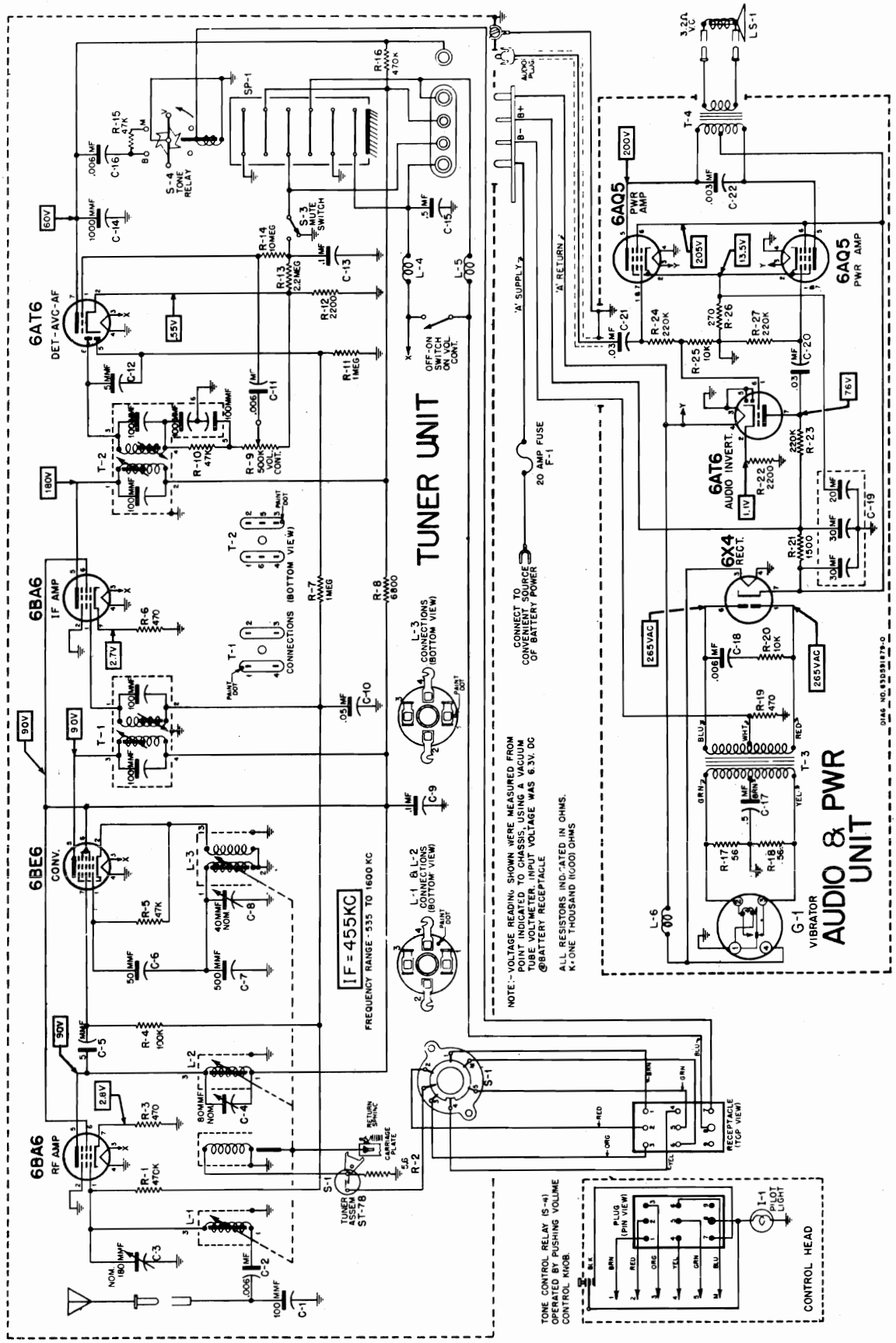

FIGURE 2. SCHEMATIC DIAGRAM

©John F. Rider

Compliments of www.nucow.com

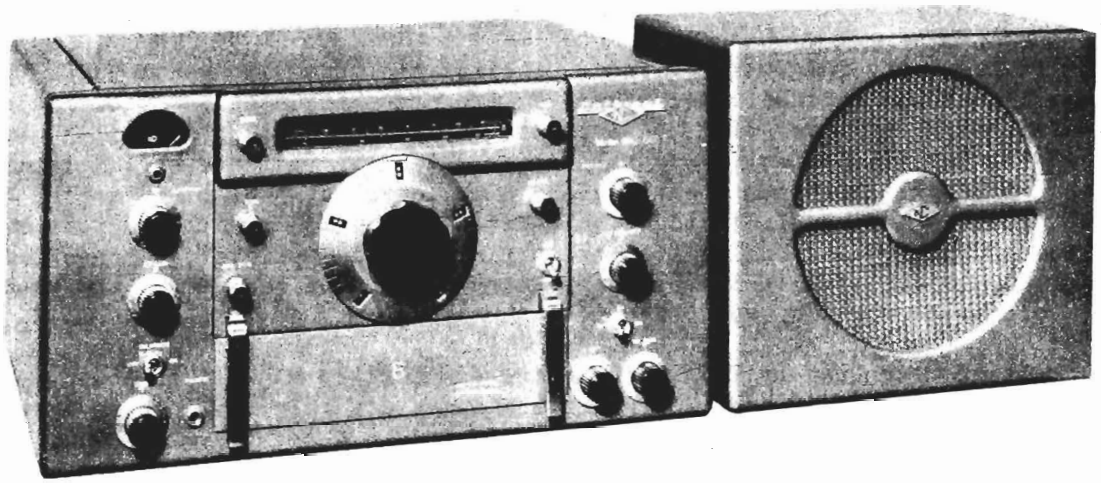

THE HRO-50 RADIO RECEIVER

SECTION 1. DESCRIPTION

1-1. GENERAL

The HRO-50 is a deluxe Radio Receiver featuring performance and versatility. Fifteen tubes, including a rectifier and a voltage regulator tube, are utilized in a superhetrodyne circuit for the reception of code and phone signals throughout its frequency range of 50 to 430 kilocycles and 480 to 35,000 kilocycles. The HRO type Receivers have long been outstanding and proven performers in Communication and Amateur services. This new series of HRO-50 Receivers feature many desirable innovations emanating from the latest advances in receiver circuitry and mechanical design. It is housed in a new and enlarged cabinet styled in an attractive gray finish with a self-contained power supply adequately isolated from the R.F. circuits. A calibrated, illuminated slide-rule dial provides direct reading in megacycles for each of the General Coverage coil sets as well as an additional bandspread scale for those coil sets incorporating this feature. A front-panel mounted oscillator trimmer control is provided to assure precise calibration. Of course, the dial-driving mechanism still features the micrometer dial. Temperature compensation and voltage regulation of the high-frequency oscillator as well as utilization of ceramic insulation in the coil sets and associated connecting brush blocks provide stable operation and freedom from drift. A single front-panel mounted Control switch selects any one of the four modes of operation, C.W., Phone, Narrow-Band F.M. or Phono. Sockets are mounted on the receiver chassis to accommodate the National Type NFM-50 FM adaptor and the National Type XCU Crystal Calibrator Unit. These accessories may be permanently installed and switched On and Off by means of the front-panel switches. At the rear of the Receiver sockets are available for external use of the National Type SOJ-3 Select-O-Ject and National Type 650S Vibrator Power Supply or battery power supply. The S-Meter circuit is designed so that the operator may adjust the sensitivity of the S-Meter. A push-pull audio system delivers the utmost in audio frequency response and undistorted power output from the built-in output transformer. Other highlights include a six position crystal filter, maximum bandspreading of the amateur bands, a quick-acting bandspread switch, dimmer control for the slide-rule dial and S-Meter lamps.

A standard equipment consists of a Receiver, Loudspeaker and coil sets A, B, C and D. Coil sets Type E, F, G, H, J, AA, AB and AC may be obtained as desired. Accessories available include the National types NFM-50 Narrow-Band F.M. adapter, XCU Crystal Calibrator, SOJ-3 Select-O-Ject and 650-S Vibrator Power Supply.

©John F. Rider

Compliments of www.nucow.com

1-2. CIRCUIT

For all frequency ranges the circuit utilizes two tuned stages of radio frequency amplification, a tuned mixer stage, a high-frequency oscillator employing a tube separate from the mixer tube, a first intermediate frequency amplifier stage employing a variable-selectivity crystal filter and a conventional second intermediate frequency amplifier both operating at 455 kilocycles, a combined second detector-automatic volume control stage, an S-Meter amplifier, a double-action adjustable threshold double-diode noise limiter, a first audio amplifier, a phase inverter a push-pull audio amplifier and a beat frequency oscillator coupled to the second detector to provide for C.W. reception.

All voltages required by the Receiver are supplied by a built-in power supply. A voltage regulator tube is used to regulate the plate supply to the high-frequency oscillator and the S-Meter amplifier stages.

1-3. ANTENNA INPUT

Antenna input terminals are provided at the rear of the Receiver. The input circuit is suitable for operation with a single-wire antenna, a balanced feed line or a low impedance 72-ohm unbalanced concentric transmission cable. The actual antenna input impedance is between 300 and 600 ohms depending on the frequency of the input signal.

1-4. TUBE COMPLEMENT

The HRO-50 Receiver is supplied complete with tubes which are tested in the Receiver at the time of alignment.

The tubes employed are as follows:

First R.F. Amplifier	6BA6
Second R.F. Amplifier	6BA6
Mixer	6BE6
High-Frequency Oscillator	6C4
First I.F. Amplifier	6K7
Second I.F. Amplifier	6K7
Second Detector - A.V.C.	6H6
Noise Limiter	6H6
S-Meter Amplifier - Phase Inverter	6SN7GT
First A.F. Amplifier	6SJ7
Audio Output (2)	6V6GT
Beat Frequency Oscillator	6J7
Voltage Regulator	OB2
Rectifier	5V4G

1-5. TUNING SYSTEM

The frequency coverage of the HRO-50 is covered in twelve bands as follows:

COIL SET	GENERAL COVERAGE	BANDSPREAD
A	14.0 - 30.0 Mc.	27.0 - 30.0 Mc.
B	7.0 - 14.4 Mc.	14.0 - 14.4 Mc.
C	3.5 - 7.3 Mc.	7.0 - 7.3 Mc.
D	1.7 - 4.0 Mc.	3.5 - 4.0 Mc.
E	900 - 2050 Kc.	
F	480 - 960 Kc.	

©John F. Rider

Compliments of www.nucow.com

G	180 - 430 Kc.	
H	100 - 200 Kc.	
J	50 - 100 Kc.	
AA		27.5 - 30 Mc.
AB	25 - 35 Mc.	
AC		21.0 - 21.5 Mc.

As shown above plug-in coil set types AA, AC, A, B, C and D provide bandspread coverage of the 10-11, 15, 20, 40 and 80 meter amateur bands. The AA, AC, B, C and D bands are spread out so as to cover 400 dial divisions while the A band is spread 430 divisions on the 500 division main tuning dial. This is accomplished by switching a small variable capacitor in series with each section of the main tuning capacitor, thus reducing its effective capacity range. All of the coil sets are factory aligned in the Receiver using accurate crystal-controlled test oscillators thus assuring precise alignment.

The micrometer type dial drives the main tuning capacitor through a worm drive having a reduction ratio of approximately 20 to 1. Backlash is eliminated by the use of a spring-loaded split worm wheel which assures positive drive in either direction at all times. This dial has an effective scale length of approximately twelve feet and is calibrated from zero to 500.

A slide-rule type dial is synchronized with the micrometer dial by means of an anti-backlash gear and an efficient string drive arrangement to the main tuning dial. A dial drum provides a means of mounting eight scales. Each of these scales is calibrated in megacycles for the general coverage and/or bandspread frequencies depending on the coil set. Mounted on the front panel is a band selector switch for ease in rotating the dial drum to select the proper band scale to correspond to the coil set in use. Each scale is clearly marked with the band designation. Two pilot lamps are used, one at each end of the dial scale drum, for illumination. The degree of illumination is controlled by the front-panel mounted Dimmer control.

1-6. CRYSTAL FILTER

The selectivity characteristics of the HRO-50 are made adjustable by means of a crystal filter. Located in the first intermediate frequency amplifier this crystal filter is designed for extreme flexibility and efficiency of operation. A six-position Selectivity switch and a crystal Phasing control are front-panel mounted for adjustment of the filter. Figure Number 1. shows the selectivity characteristics of the Receiver for each of the six positions of selectivity.

The crystal filter may be used for either C.W. or phone reception; any degree of selectivity from true single-signal to wide band A.M. broadcast reception being available. Operation of the Phasing control provides for efficient suppression of interfering C.W. signals or M.C.W. signals which may produce objectional heterodynes.

1-7. NOISE LIMITER

The noise limiter in the HRO-50 Receiver uses an automatic type double-action circuit resulting in limiting noise pulses on both the positive and negative peaks. It is equally effective on both C.W. and phone reception. The usefulness of this limiter will be most appreciated on the higher frequency bands of the Receiver when automobile ignition noise and other high frequency disturbances are effectually suppressed. A threshold control on the front panel permits adjustment of the level at which limiting action starts.

©John F. Rider

Compliments of www.nucow.com

MODEL HRO-50

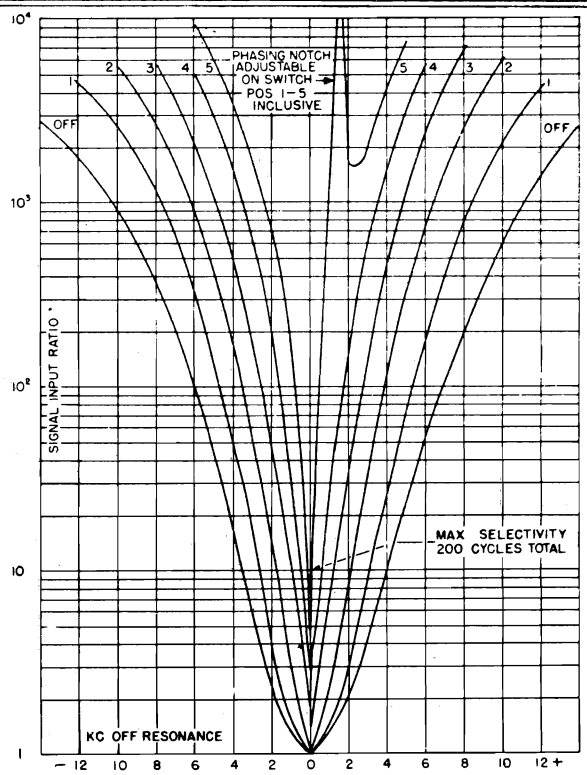

Figure No. 1. Crystal Filter Selectivity Curves

1-8. TONE CONTROL

The Tone control circuit has been especially designed to provide a versatile variance of the frequency characteristics of the audio amplifier output. In the extreme counter-clockwise position the greatest degree of high audio frequency response is obtained. Rotating the control clockwise until the switch mounted on the control just closes provides a comparatively flat response over the entire usable audio frequency range. Further clockwise rotation will result in the high audio frequencies being attenuated as illustrated in Figure Number 2. This control is particularly helpful when receiving weak signals through interference. If a signal is weak and partially obscured by background noise or static, an improvement in signal-to-noise ratio will be obtained by rotating the Tone control in a clockwise position thereby attenuating the higher audio frequencies.

Figure No. 2. Audio Amplifier Response

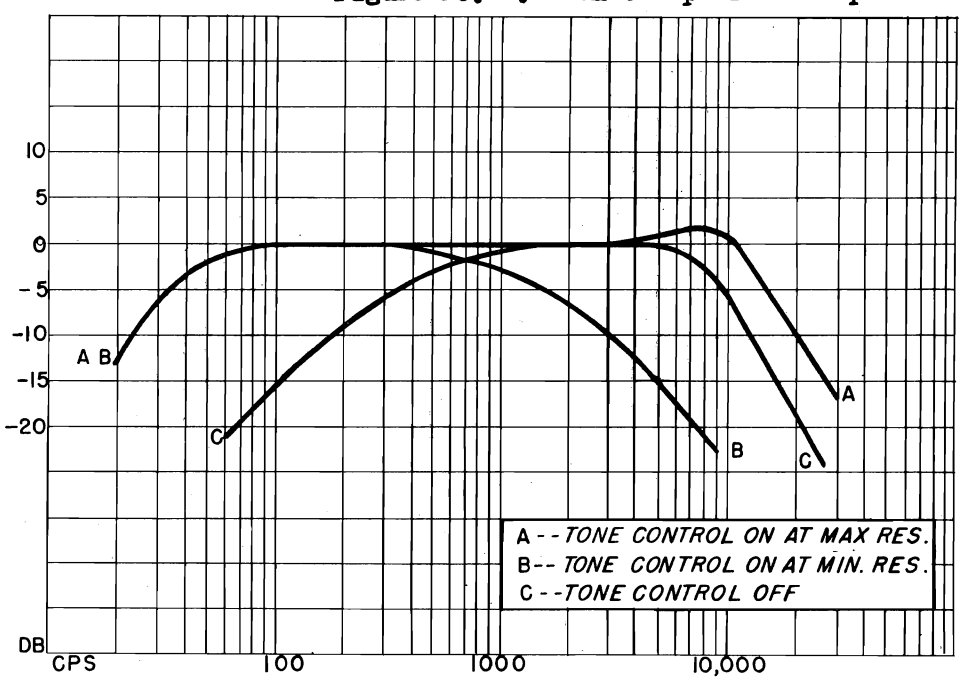

©John F. Rider

Compliments of www.nucow.com

1-9. TEMPERATURE COMPENSATION

The HRO-50 is compensated for frequency drift due to temperature changes which may detune the Receiver from the desired signal over long or short periods of reception. The most objectionable cause of frequency drift is the change of inductance of the high-frequency oscillator coil as heat from the tubes causes the interior of the Receiver to increase in temperature. This undesirable heating effect in the R.F. coils is minimized by the position of the plug-in coil sets in that they are placed at the bottom of the Receiver underneath the chassis in a separately shielded compartment. A further safeguard against frequency drift is provided for on bandspread operation. The heat which is dissipated in the high-frequency oscillator may change the inter-electrode capacity of the tube and thus cause frequency drift. To offset this effect a small negative temperature coefficient capacitor is placed adjacent to the high-frequency oscillator tube to compensate for any change caused by the internal heating of the tube.

The coil set terminal connecting boards of each shielded coil can as well as their mating brush blocks have been made of ceramic type material. As a result freedom from any possible leakage due to poor insulation assures a low degree of drift. This will be found especially true of the coils operating at the higher frequencies.

1-10. SIGNAL STRENGTH METER

Signal input readings are indicated in S-units from 1 to 9 and in decibels above S-9 from zero to 40 db. on the panel-mounted signal strength meter. A reading of S-9 is obtained with an input signal of approximately 25 microvolts. The meter employs a zero to 1 milliampere movement with its mechanical zero at 40 db. on the dial scale. The S-Meter is connected in series with the plate input of the S-Meter Amplifier tube V-8A and measures the plate current of this tube. With the A.C. supply switch On and the A.V.C. switch set at A.V.C. the S-Meter will read zero in the absence of signal input. A variable resistor is shunted across the meter and with no antenna connected this resistor allows correct adjustment of the pointer to its electrical zero. Any increase in A.V.C. voltage caused by signal input will give a corresponding increase in the meter reading. At the 40 db. meter reading the A.V.C. grid voltage applied reaches the cut-off point of the amplifier tube. Therefore the pointer cannot be harmed by violent contact with the full-scale meter pin. For the purpose of comparing strong signals (which cause the meter to contact the full-scale meter pin) with other stronger and/or weaker signals the sensitivity of the S-Meter may be lowered by retarding the R.F. Gain control. The meter dial lamp illumination is regulated by a Dimmer control mounted on the front panel of the Receiver.

1-11. NARROW-BAND F.M. SOCKET

A standard octal socket, X-1, is mounted inside of the Receiver on the center portion of the power supply compartment chassis. It is designed to mount the National Type NFM-50 Narrow-Band F.M. adaptor. A Control switch is front-panel mounted to provide a means of switching the adaptor into the output of the intermediate amplifier circuit. With the Control switch set at the N.F.M. position the receiver is adjusted for the reception of narrow-band F.M. signals. With the A.V.C. switch set at A.V.C. the S-Meter is operative in the N.F.M. position and the Receiver should be tuned for maximum meter reading to assure efficient operation. Further information concerning the NFM-50 unit is contained in a separate data sheet at the rear of this manual.

©John F. Rider

Compliments of www.nucow.com

1-12. CRYSTAL CALIBRATOR SOCKET

The Crystal Calibrator socket, X-2, is of the standard octal type mounted on top of the power supply compartment chassis inside of the Receiver. It is designed to accommodate a National Model XCU Crystal Calibrator. The Model XCU is compactly constructed and furnished with a drive screw clamping arrangement to hold it firmly in place. A double-pole, three-position toggle type front-panel mounted Calibrate switch marked 100-Off-1000 provides a means of connecting B-plus to the unit for instantaneous use. At the same time by using this toggle switch a resonant crystal-controlled frequency of either 100 or 1000 kcs. may be selected. The output of this unit is loosely coupled to the first R.F. amplifier stage through the socket wiring. Further information concerning the Model XCU unit is covered by a separate data sheet included at the rear of this manual.

1-13. SELECT-O-JECT SOCKET

The Select-O-Ject socket, X-3, is a standard octal type socket accessible at the rear of the Receiver. It is primarily designed to accommodate a National Model SOJ-3 Select-O-Ject unit. The mating plug attached to the SOJ-3 permits a direct connection into this socket in place of the audio-jumper plug originally plugged into the Select-O-Ject socket. By proper adjustment of the controls any single audio frequency selected in the range of approximately 80 to 10,000 cycles may be boosted or rejected. Detailed instructions for proper operation of the Select-O-Ject are contained with the unit.

For convenience a source of 6.3 V.A.C. filament voltage, a 240 V.D.C. high voltage as well as the 105 V.D.C. regulated voltage is available for operation of external apparatus. The Schematic diagram, Figure Number 13 shows a pin view of the Select-O-Ject socket thus providing the information necessary for making the proper connections. External equipment MUST NOT be utilized if the Narrow-Band F.M. adaptor, Crystal Calibrator and Select-O-Ject units are all operated at the same time. Consideration must also be given to the fact that the 105-volt regulated power supply cannot be switched off by the B+ On-Off switch.

1-14. PHONO INPUT JACK

A Phono jack is mounted at the rear of the Receiver and can be used for connecting auxiliary apparatus, such as a record player pick-up or microphone into the audio system of the Receiver. This input circuit is of high-impedance providing a suitable match for such external equipment into the high-gain first audio amplifier stage. The front-panel mounted Control switch must be set at the Phono position when using the Phono jack. Both the A.F. Gain and Tone controls are operative with this type of operation.

The majority of record player pick-ups are terminated in a single shielded wire. The Phono jack on the HRO-50 is the type that accommodates a standard phono tip plug and if the record player to be used is not fitted with such a plug one can easily be attached. If the output circuit of the record player is of low impedance (less than 100,000 ohms) improved efficiency will be obtained if a suitable resistor, with a value as specified for the particular record player, is connected across the phono tip plug or its mating jack to properly load the record player output circuit.

1-15. AUDIO OUTPUT

The HRO-50 features a push-pull output amplifier using inverse feed-back. See Figure No. 2 for the audio system response characteristic. The matching transformer located inside the Receiver provides two audio output circuits as follows:

©John F. Rider

Compliments of www.nucow.com

(1) The transformer secondary leads are brought to a three-terminal Output board located at the rear of the Receiver, having both 8 and 500-ohm terminals and a common ground terminal. The eight-ohm terminal provides output for the speaker voice coil. The 500-ohm terminal is available for connection to a 500-ohm line. Approximately 8 watts of undistorted audio output power is available at the output terminal board and a maximum power of 10 watts is obtainable.

(2) A headphones jack is front-panel mounted and is wired so as to silence the Loudspeaker upon insertion of the headphones plug. The headphones output load impedance is not critical and varying types of headphones may be used including crystal types, as no direct current flows through the headphones.

1-16. POWER SUPPLY

The power supply is built in a separate compartment inside of the Receiver cabinet incorporating a heat-resistant shielded barrier isolating it from the R.F. chassis portion. It is designed for operation from a 110/120 or 220/240-volt, 50/60 cycle A.C. supply source. A toggle switch is mounted on top of the chassis for selection of either 110/120 or 220/240-volt operation. Normal power consumption is approximately 115 watts. The built-in power unit supplies all of the voltages required by the heater and B supply circuits, 4.5 amperes at 6.3 volts and 125 milliamperes at 240 volts respectively. In addition this supply is also capable of furnishing all voltages required by the accessories such as the NFM-50, XCU and SOJ-3. A 2-ampere fuse is connected in one side of the A.C. input supply to protect the Receiver circuits against possible voltage surges in the power line or short circuits in the Receiver. It is located at the rear of the Receiver and easily removed for examination or replacement.

A Power Socket, X-4, is provided at the rear of the Receiver so that either a battery or vibrator power supply may be utilized for portable or emergency service. The National Type 650S Vibrator Power Supply is designed to provide efficient operation of the Receiver with the use of a 6-volt storage battery input. Further information concerning the 650S is contained at the rear of this manual on a separate data sheet.

1-17. LOUDSPEAKER

The HRO-50TS or HRO-50RS Loudspeakers in table or rack mounting styles respectively are designed for use with the Receiver. These are both permanent-magnet type Loudspeakers furnished with a shielded connecting cable from the 8-ohm voice coil for connection to the output terminal board located at the rear of the Receiver. If desirable a 500-ohm shielded line may be used from the Receiver output terminals to the speaker and/or externally operated equipment. In event of a dynamic type loudspeaker being used external means for supplying field excitation voltage will be necessary.

A cabinet furnished to match the Receiver design houses the HRO-50TS Loudspeaker for table mounting. The cabinet is lined with sound absorbent material to avoid mechanical resonance.

SECTION 2. INSTALLATION

2-1. GENERAL

All HRO-50 Receivers are supplied with the following eight scales mounted on the slide-rule dial drum, irrespective of the type of coil sets ordered, A, B, C, D,

©John F. Rider

Compliments of www.nucow.com

E-F, AA, AB and AC. If a coil set or coil sets are ordered with the Receiver and the corresponding scale does not appear on the dial drum it will be found packed with the coil set. The new scale is installed in place of any one of the unused scales previously mounted on the dial drum. Two Phillips head type screws, one at each end of the scale, hold it properly in place. The drum scales for the A, B, C and D coil sets are frequency calibrated in megacycles for both of the available ranges i.e., General Coverage and Bandspread. The E and F coil set ranges are on the same scale, while the remaining scales carry just the one frequency range calibrated in megacycles. Each scale is clearly marked with the band designation.

2-2. LOCATION

The Receiver should not be installed in small, unventilated or warm spaces. Wherever practicable placement should be made to allow freedom of air circulation on all four sides. The Loudspeaker may be located in any desirable position although it is not recommended that it be placed on top of the Receiver as undesirable microphonics may result. The Loudspeaker should not be placed near the antenna terminals.

2-3. ANTENNA RECOMMENDATIONS

The radio frequency input of the Receiver is designed for operation from either a single-wire antenna or other types employing transmission lines having impedances of 70 ohms or more. There is an antenna terminal panel at the rear of the Receiver with three screw-type terminals marked A, A and G respectively. A link is provided on the antenna terminal panel to allow connection of two-wire or single-wire type antennae to the Receiver.

For best impedance matching to the Receiver input circuit an antenna with a 300 to 600 ohm transmission line is recommended. The antenna should be cut to the proper length for the most used frequency. The antenna transmission line feeders should be connected to the two antenna terminals marked A; the grounding link is not used. It must be remembered, however, that an antenna installation of this type will have maximum efficiency over a band of frequencies near that frequency for which it is designed and will be most useful in installations where the Receiver is tuned to one frequency or band of frequencies. For other frequencies, it would be desirable to connect the two transmission line leads together at the antenna terminal at the left of the antenna terminal panel, grounding the other terminal by means of the link. The antenna is thus utilized as a single wire type.

The most practical antenna for use in installations where the Receiver is to be used over a wide range of frequencies is the single-wire type. An antenna length of from 50 to 100 feet is recommended. The antenna lead-in should be connected to the antenna terminal marked A at the left of the antenna terminal panel; the other terminal marked A should be grounded by means of the link.

When a doublet is used, the antenna feeders or balanced transmission line are connected to the two terminals marked A. The grounding link is not used.

The inner conductor of a concentric transmission line should be connected to the terminal marked A at the left of the antenna terminal panel. The outer conductor should be connected to the other terminal marked A and grounded by means of the link to G.

In some cases where a doublet antenna is used with a low impedance concentric or other type transmission line it may be necessary to re-trim the first R.F. amplifier at the high end of each band to provide a better impedance match between antenna and receiver input circuit. Paragraph 4-6 describes this procedure.

©John F. Rider

Compliments of www.nucow.com

In an installation where the Receiver is to be used as the receiving unit in a transmitting station the most efficient operation will result from use of the transmitting antenna as receiving antenna also. This is especially true if the transmitting antenna is of the multi-element, directional type since the same antenna gain is available for both receiving and transmitting - a very desirable condition. For switching the antenna from Receiver to transmitter, an antenna change-over relay should be used. A double-pole, double-throw relay possessing good high-frequency insulation is suitable. A second relay and a three position switch may be used to control the transmitter plate supply and the Receiver B+ circuits. This second relay should be a single-pole single-throw type having one normally open pair of contacts. The schematic diagram of this type of control circuit is shown in Figure 3. With S-1 in the receive position the antenna transmission line is connected to the Receiver by contacts 2, 3, 5 and 6 on relay RY-1; the B+ circuit of the Receiver is completed by the switch. (The B+ switch on the Receiver should be at B+ Off). With the switch in the transmit position RY-1 contacts 1, 3, 4 and 6 are closed transferring the antenna transmission line to the transmitter; contacts 7 and 8 of relay RY-2 close to complete the plate supply circuit to the transmitter. Contacts 7 and 8 of relay RY-2 should be in series with the primary of the transmitter plate supply transformer. Thus, the station is in the receiving condition with switch S-1 in the receive position and in the transmitting condition with S-1 in the transmit position. With S-1 in the mid-position the Receiver B+ circuit and transmitter plate supply circuit are both open thus permitting coil set changing in the Receiver and transmitter. In the mid-position the Receiver B+ circuit is controlled by the B+ switch on the front panel of the Receiver. NOTE

The high-frequency oscillator, C.W. oscillator S-Meter amplifier and the push-pull audio output amplifier are not affected by the external relay connections to the B.S.W. terminal block. Unless the A.C. On-Off switch is set at Off these circuits will obtain an uninterrupted B-plus supply.

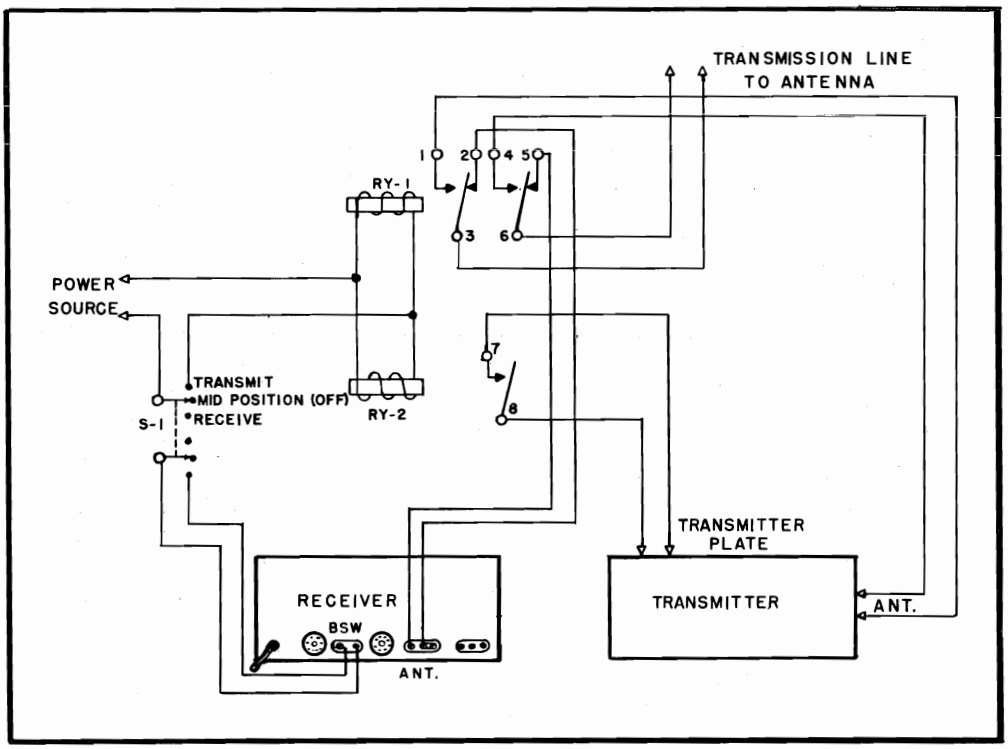

Figure No. 3. Typical Antenna Switching System

©John F. Rider

Compliments of www.nucow.com

2-4. A.C. OPERATION

After unpacking the HRO-50 Receiver and associated equipment proceed as follows:

(1) Make sure that all tubes are firmly seated in their sockets, tube clamps are properly in place and all grid clips securely fastened.

(2) Make sure the plug-in coil set used in the Receiver is firmly in position by pressing down the lever-type handles on the front panel to their maximum vertical position.

(3) Make sure that the front-panel mounted Control switch is set in the proper position. This switch provides four operating positions, C.W., A.M., N.F.M. or Phono.

(4) Connect the antenna as recommended in Section 2-2.

(5) Connect the Loudspeaker cable to the Output terminal board at the rear of the Receiver. This is accomplished by connecting the outer shield lead to the common terminal and the other to the 8-ohm terminal. A 500-ohm terminal is also available on the Output terminal board in cases where a 500-ohm line is utilized for Loudspeaker connection.

(6) Connect the Receiver A.C. line cord to the proper source of voltage. The Primary switch, S-10, must be set at the position corresponding to the line voltage to be used i.e., 110/120 or 220/240 volts, 50/60 cps.

(7) Set the controls as recommended in Section 3 for reception of signals.

NOTE

Where the Receiver is located in the R.F. field of a relatively powerful transmitter, it is advisable to provide some means of preventing damage to the Receiver R.F. coil. If a separate receiving antenna is used a means of disconnecting or grounding it during transmission periods should be provided.

2-5. BATTERY OPERATION

The HRO-50 is readily adaptable for emergency, portable operation or operation in localities where a 115 or 230-volt A.C. power source is not available. It may be operated directly from batteries or a National Type 650S Vibrator Power Supply designed for operation from a 6-volt storage battery. The Type 650S power unit draws 9.0 amperes at 6-volts when furnishing power to the Receiver if the Narrow-Band F.M. Adaptor, Crystal Calibrator and Select-O-Ject units are not used. If these plug-in units are utilized typical operating conditions and power consumption data will be found in Section 6.

The Schematic Diagram Figure Number 13 illustrates pin connections of the Receiver Power socket, X-4. This provides the information necessary for wiring the octal type battery plug which is used in place of the regular A.C. jumper plug. To conserve battery power the battery plug must be disconnected when the Receiver is not being used. For stand-by operation in all cases it is recommended that a switch be placed in the battery B-plus lead as the B-plus switch in the Receiver does not open the B-plus circuit supplying the high-frequency oscillator, C.W.

©John F. Rider

Compliments of www.nucow.com

oscillator, S-Meter Amplifier or the push-pull audio output tubes. A suggested refinement is to include a switch in the A-plus input lead so that the tube heaters may be turned off when the Receiver is not in use without the necessity of removing the battery plug from the Power socket.

2-6. ACCESSORY SOCKETS

Three octal type sockets are available for additional accessories as follows:

(1) A N.B.F.M. socket, X-1, is mounted on top of the chassis inside the power supply compartment. A National Type NFM-50 Narrow-Band F.M. adaptor is designed to fit into this socket and is supplied with a mounting bracket and drive screws to hold it firmly in place. The front-panel mounted Control switch, S-7, provides a means of switching the NFM-50 unit into instant service, as required.

(2) A Crystal Calibrator socket, X-2, is top chassis mounted in the power supply compartment. This socket is wired to accommodate a National plug-in Type XCU Crystal Calibrator Unit. A slotted head screw arrangement bolts the unit firmly in place. The front panel Calibrate switch provides a means of applying B-plus to the unit as well as the selection of either a 100 or 1000 kc. marker signal.

(3) A Select-O-Ject socket, X-3, of the standard octal type is mounted so as to be accessible from the rear of the Receiver. This socket is designed primarily for the use of a National Model SOJ-3 Select-O-Ject unit. The SOJ-3 is fitted with an interconnecting cable and plug for direct connection to the Select-O-Ject socket.

Reference to the Schematic Diagram will show the various connections made to the socket if it is desired to use the voltages available for accessories other than the Select-O-Ject. It will be noted that B+ (240 V.D.C. and 105 V.D.C. regulated) and filament voltages are available. There is a definite limitation on the drain permissible at this socket. The total permissible drain (if the NFM-50, XCU and SOJ-3 are not used) is 1.5 amps. at 6.3 V.A.C., 2.5 milliamperes at 240 V.D.C. and 5 milliamperes at 105 V.D.C. If the 105-volt supply is used it must be remembered that it cannot be switched Off by the B+ On-Off switch or external switching devices connected to the B.S.W. panel unless an additional relay is used.

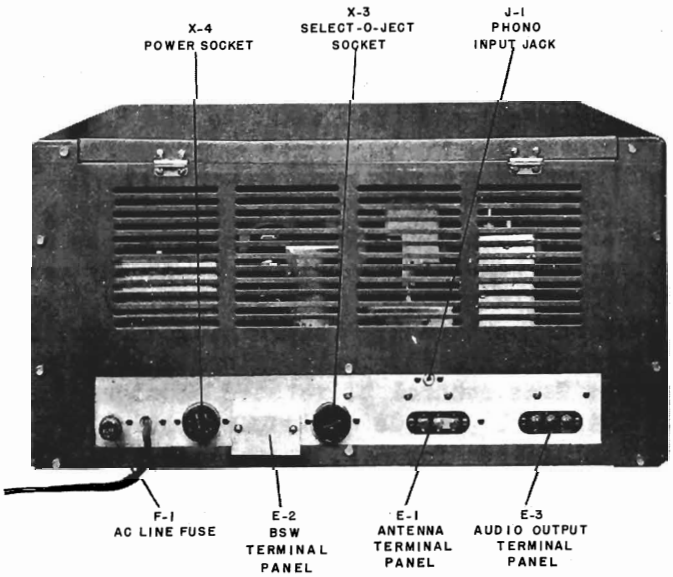

Figure No. 4. Rear View of Receiver

©John F. Rider

Compliments of www.nucow.com

SECTION 3. OPERATION

3-1. CONTROLS

All controls are identified by front-panel markings for ease of identification. The controls are located in a symmetrical manner and are arranged for ease of operation.

The main tuning HRO type micrometer dial is arranged so that the frequency to which the Receiver tunes increases as the dial reading increases. The slide-rule dial pointer mechanism is synchronized with the main tuning dial using an anti-backlash gear plus an efficient string-drive arrangement to provide an accurate relationship between the main tuning dial and the direct frequency calibrated scales on the slide-rule drum assembly. Front-panel mounted is a Band selector switch for switching the proper scale in place for the coil set to be used.

The R.F. Gain control serves to adjust the amplification of the second R.F. first I.F. and second I.F. amplifier stages. Maximum sensitivity is obtained by rotating the control knob to the extreme clockwise position (10) on its circular scale. At the extreme clockwise position all tubes are operating at maximum gain with minimum bias. As the control is rotated counter-clockwise, increasing bias is applied to the cathodes of the second R.F., first I.F. and second I.F. tubes, thus reducing their amplification.

The A.C. On-Off switch is associated with the A.F. Gain control and A.C. power is turned on as the A.F. Gain control is advanced from A.C. Off to zero on its scale.

The B+ On-Off switch is connected in the positive lead of the power supply circuit and its purpose is to disconnect the B-plus during periods of transmission or WHEN CHANGING COIL SETS. This last function is important. The B+ circuits are completed when the switch is set at On. However, the B-plus circuits of the high-frequency oscillator, S-Meter amplifier, C.W. oscillator and push-pull audio output tubes remain On at all times regardless of the position of the B+ On-Off switch providing the A.C. On-Off switch is set at On.

Connected in parallel with the B+ switch and mounted at the rear of the chassis is a pair of contacts marked B.S.W. intended for use with relay control of the Receiver. The B.S.W. panel is covered by a metal shield to prevent accidental contact with the terminals by the operator. Two slots are provided in this shield to bring out wires to connect to an external switch or relay. Care should be taken that these wires for external connection do not short to the B.S.W. shield.

The Phasing control and Selectivity switch are part of the crystal filter. When the Selectivity switch is set at Off the crystal is switched out of the circuit. With the crystal switched out the Phasing control has no influence on Receiver performance. With the Selectivity switch set at any point between 1 and 5, inclusive, the crystal filter is in operation, selectivity increasing as the switch is progressively advanced in position 5. The Phasing control is then used to balance the crystal bridge circuit and eliminate interfering signals or heterodynes. It is recommended that the Tone control be rotated counter-clockwise until the switch is turned Off. This will provide optimum reception of the high audio frequencies when using the crystal filter for A.M. reception. The resultant boost of the higher frequencies tends to compensate for the side-band cutting action of the crystal filter.

The C.W. oscillator is turned on by setting the front-panel mounted Control

©John F. Rider

Compliments of www.nucow.com

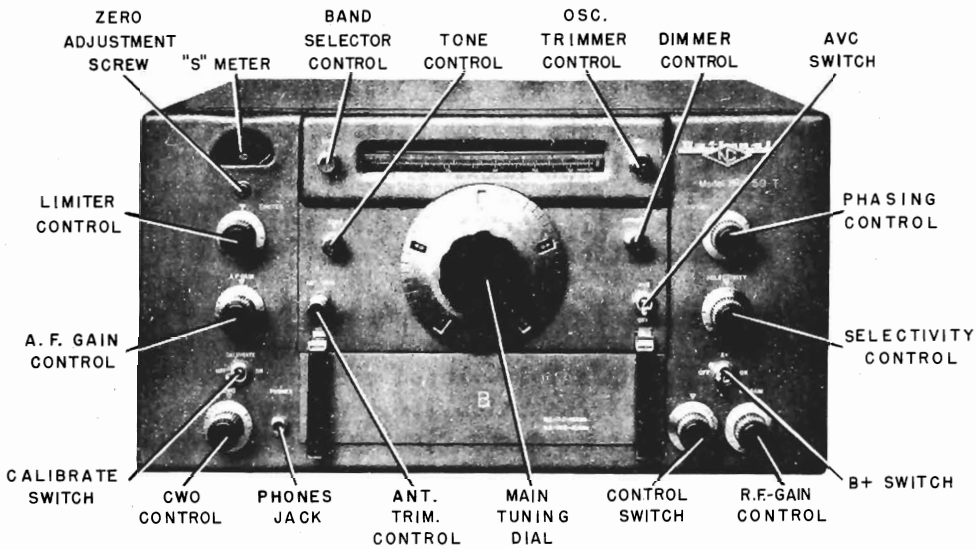

Figure No. 5. Front View of Receiver

switch at the C.W. position. The C.W.O. control provides a vernier tuning adjustment for the C.W. oscillator transformer. This oscillator is used to produce an audible beat note when receiving C.W. signals or to locate the carrier of a weak phone station. With the Control switch set at the C.W. position B-plus is applied to the C.W. oscillator tube providing a constant B-plus supply regardless of the B+ On-Off switch setting or the B.S.W. external control devices. Normally the C.W.O. control is set at zero, however by rotating it either to the right or left of zero the operator can select an audio tone suitable to the ear, or he may set the control for best reception. The C.W. code characters are made audible through the heterodyning action of the C.W. oscillator with that of the incoming signal. Care should be taken to retard the R.F. Gain control to a point where the receiver does not overload.

The Limiter control serves to switch on the limiter and, following this, to adjust the threshold at which limiting action starts. With the Limiter control turned on (at position 0 on the dial scale) limiting action automatically takes place at a relatively high percentage modulation. Rotating the control clockwise progressively lowers the threshold, or percentage modulation, at which limiting action starts until maximum clipping is achieved at 10. This limiter is double-action in that limiting is accomplished by clipping of both positive and negative peaks. Limiting action is equally effective for both phone or C.W. reception.

The Tone control is used to vary the audio frequency characteristic of the audio system. In the extreme counter-clockwise position the greatest degree of high audio frequency response is obtained. Rotating the control clockwise until the switch mounted on the control just closes provides a comparatively flat response over the entire usable audio frequency range. Rotating the control further in a clockwise position will attenuate the high audio frequencies as shown in Figure Number 2. If a signal is weak and partially obscured by background noise or static an inprovement in signal-to-noise ratio is possible by the attenuation of the higher audio frequencies. Excessive attenuation of these frequencies, however, may result in an impairment of A.M. speech intelligibility. When receiving C.W. signals it will be possible to advance the Tone control considerably further than is possible in A.M. reception since audio distortion is relatively unimportant.

The A.V.C. switch is a two-position toggle marked A.V.C.-Off. The automatic

©John F. Rider

Compliments of www.nucow.com

volume control circuits are operative with the toggle switch in the A.V.C. or upper position.

The A.F. Gain control adjusts the volume level of the signal at both the Phones jack and Loudspeaker terminals. Clockwise rotation of this control increases the signal applied to the grid of the first audio amplifier tube. The A.F. Gain control is operative when an audio signal is applied to the Phono input jack with the Control switch set at the Phono position.

A Bandspread switch is mounted on the A, B, C and D coil sets. Inspection of the coil set ceramic terminal panels will show a silver-plated spring metal strip with a slotted center screw. Four silver-plated contacts are provided on the terminal panels; two for each type of reception i.e., General Coverage or Bandspread. The metal strip may be turned either to the right or left thereby selecting the type of reception required. A spring tension detent arrangement provides for proper placement and a firm trouble-free electrical contact in each position. It is only necessary to switch this from the left to the right hand side to change from General Coverage to Bandspread. The lower calibrated scale on the slide rule dial is used when operating in the Bandspread position. A typical coil set showing adjustment locations is illustrated in Figure Number 7 contained in Section 4.

The Ant. Trim. control operates a tuning capacitor which is connected across the first R.F. amplifier section of the main tuning capacitor. This trimmer control is used to tune the first R.F. amplifier stage properly under a wide variety of antenna loading conditions over the entire frequency range of the receiver.

The Dimmer control is a variable resistor actuated by a front-panel mounted dial. It is connected in series with one of the filament supply wires to the S-Meter and slide-rule dial pilot lamps and furnishes a means of varying the degree of illumination as desired by the operator.

The front-panel mounted Osc. trimmer control drives a variable air capacitor connected in parallel with the oscillator main tuning capacitor. Assuming that the Receiver is properly aligned this compensating trimmer may be used for minor calibration adjustments. Calibration can be checked by the use of accurate crystal-controlled test oscillators or by using the National Model XCU Crystal Calibrator. Use of the Osc. trimmer should not be attempted until the Receiver has had a warm-up period of at least five minutes.

A four position Control switch is mounted on the front panel of the Receiver. In the C.W. position the C.W. oscillator is placed in operation. The A.M. position provides normal reception of phone or broadcast signals. In the N.F.M. position the reception of narrow-band F.M. signals is possible provided a National Type NFM-50 adaptor is plugged into the N.B.F.M. socket. With the Control switch in this position the adaptor is connected between the output of the intermediate amplifier and the input of the audio system. When the Control switch is set in the Phono position the Phono jack is connected to the input of the audio amplifier. In the Phono position all of the Receiver circuits except the audio system are rendered inoperative. The A.F. Gain and Tone controls remain operative. If it is so desired the record player may remain connected to the Receiver and normal receiving operation resumed by setting the Control switch to any of the other positions.

3-2. PHONE RECEPTION

After the HRO-50 is properly installed as outlined in Section 2, it is placed in operation by the following adjustments:

©John F. Rider

Compliments of www.nucow.com

1. Set the Control switch at A.M.
2. Set the A.V.C. switch at A.V.C.
3. Set the Selectivity switch at Off.
4. Set the Phasing control at zero.
5. Set the Limiter control at Off.
6. Set the R.F. Gain control at 10.
7. Check the position of the Osc. trimmer control pointer. It is aligned at the factory so that proper calibration is obtained with the pointer in a vertical position with the arrow head pointed to the "S" in the Osc. panel engraving.
8. Turn the A.C.-On-Off switch mounted on the A.F. Gain control to On i.e., zero on the dial scale.
9. Set the Receiver B+ switch at On.
10. Adjust the Band control to select the scale corresponding to the plug-in coil set in use.
11. Turn the A.F. Gain control to the position giving the desired audio volume.
12. Adjust the Ant. Trim. control for a maximum S-Meter reading after the desired station has been selected. Alternately in the absence of a signal the Ant. Trim. control may be set for maximum receiver background noise.
13. Turn the Tone control to a position giving the desired audio output response for the signal tuned in.

The Receiver is now adjusted for the reception of phone signals and will tune to the frequency corresponding to the plug-in coil set in use and the setting of the main tuning dial. If a dual-coverage plug-in coil set is used the position of the Bandspread switch, as previously described in paragraph 1 of this section, will determine the frequency coverage i.e., General Coverage or Bandspread.

The settings given above are of necessity for the reception of signals of average strength. Exceptionally strong or weak signals may require modification of the above settings. Very strong signals may cause overload or distortion in the Receiver with the R.F. Gain control at 10. In this case retarding this control slightly until the overload or distortion disappears is recommended. However, the operator must remember that automatic volume control action will be restricted unless the R.F. Gain control is fully advanced. Audio output should be adjusted entirely by means of the A.F. Gain control.

The A.V.C. - Off switch may be set at the Off position to provide increased sensitivity in some cases. With such a setting the operator must be careful not to advance the R.F. Gain control to a point where I.F. or audio amplifier overload occurs. Such overload is indicated by distortion.

Various types of interference which may be encountered due to adverse receiving conditions can be minimized by utilization of the following controls in the manner described.

Noise Limiter -- When a signal is accompanied by static peaks or noise pulses of high intensity and short duration, the best signal-to-noise ratio will be obtained by turning On the Limiter control. In general, it will be found that turning the Limiter control On to 0 on the dial scale will effectively minimize interference caused by external noise pulses. In cases where the noise pulses are extremely pronounced a higher degree of noise suppression will be realized by advancing the Limiter control to a higher dial setting.

Tone control -- An improvement in signal-to-noise ratio can be realized by setting the Tone control to attenuate the high audio frequencies. When receiving weak

©John F. Rider

Compliments of www.nucow.com

signals which are partially obscured by background noise or static an improvement in reception will be noticed by rotating the Tone control in a clockwise manner. However, too much attenuation of the high audio frequencies may impair the intelligibility of speech.

Selectivity and Phasing -- The selectivity of the Receiver is adjusted by means of the crystal filter Selectivity switch. The normal setting of the Selectivity switch in phone or broadcast reception is at one of the positions affording broad selectivity. Positions marked Off, 1 or 2 are recommended. Selectivity may be progressively increased by turning the Selectivity switch to position 3, 4 or 5. Increasing selectivity will result in the attenuation of the higher audio frequency tones of the signal as well as sharper tuning. If the selectivity is increased too much these higher frequency audio tones will be attenuated to such an extent that phone or broadcast reception may become unintelligible due to excessive side-band cutting. The Phasing control is part of the crystal filter and is used to eliminate or attenuate interfering heterodynes. The Phasing control is inoperative with the Selectivity switch set in the Off position but is operative in all other settings. The normal setting of the Phasing control with the crystal filter On i.e., the Selectivity switch set at 1, 2, 3, 4 or 5 in phone reception is at zero on its scale. If after a desired signal has been tuned in an interfering signal causes a heterodyne or whistle the Phasing control should be adjusted until this interference is reduced to minimum. The setting of the Phasing control should be that which provides a maximum attenuation of the objectionable heterodyne. If the heterodyne is below 1,000 cycles the optimum Phasing control setting will be near either one or the other end of the dial scale, depending upon whether the interfering signal has a higher or lower frequency than the desired signal.

3-3. C.W. RECEPTION

The initial adjustment of the Receiver controls for C.W. reception is the same as given in Section 3-2 except for the following:

1. Set the Control switch at C.W.
2. Set the A.V.C. switch at Off. It is important that the A.V.C. switch is turned Off for C.W. operation since the Receiver will block and become extremely insensitive if this is not done.

For the reception of C.W. signals the action of the crystal filter is similar to that for phone reception except that full use of the sharp selectivity position may be used without the loss of intelligibility experienced in phone reception. When maximum selectivity is used, (Selectivity switch at position 5) care must be exercised since tuning is very critical. When the Receiver is slowly tuned across the carrier of the received signal the beat-note produced will be very sharply peaked in output at a particular audio pitch. This peak in response indicates the correct Receiver dial setting. The setting of the C.W.O. control must be such that the beat-note peak is well within the audible range so that the receiver peak response may be readily observed. A C.W.O. dial setting near zero is recommended. After the Receiver has been correctly tuned, the pitch of the beat-note peak may be adjusted by means of the C.W.O. control to provide an audio tone which is pleasing to copy or coincides with any response peaks in the speaker or headphones. Under these conditions, the Receiver will exhibit pronounced single-signal properties which may be demonstrated by tuning the Receiver to the other side of "zero-beat" so that the pitch is the same as before and observe the marked reduction in output. This dial setting is not recommended for use other than to demonstrate the single-signal properties of the Receiver. With the Receiver tuned to "crystal peak", an interfering signal may be attenuated by proper setting of the Phasing control since

©John F. Rider

Compliments of www.nucow.com

this control has little effect on the desired signal.

Similar to phone reception the Limiter control can be used to great advantage in C.W. reception for the reduction of interference due to external noise pulses. For C.W. reception, however, the Limiter control may be set at a well advanced position on the dial scale as excessive clipping of the modulation peaks will not be experienced as might be the case in phone reception. Also the Tone control may be advanced considerably further for C.W. reception since audio distortion is relatively unimportant.

3-4. N.B.F.M. OPERATION

The HRO-50 Receiver is adaptable for Narrow-Band F.M. reception by utilizing a National Type NFM-50 Narrow-Band F.M. adaptor. Operating instructions as given in paragraph 3-2 of this Section are applicable for the reception of narrow-band F.M. signals except that the Control switch must be set at N.F.M. It is recommended that when the operator is scanning a band for signals that the Control switch is set at A.M. An F.M. signal is indicated by the presence of an audio null in the center of the signal carrier. When an F.M. signal is encountered the Control switch should then be set at N.F.M. and with the A.V.C. switch set at A.V.C. the signal tuned for maximum S-Meter reading.

3-5. MEASUREMENT OF SIGNAL STRENGTH

To measure the strength or intensity of a signal the R.F. Gain control must be advanced to 10, the Control switch set at A.M. and the A.V.C.-Off switch at A.V.C. The crystal filter should be turned Off by means of the Selectivity switch and the Phasing control set at zero. The Ant. Trim. control should be adjusted for a maximum S-Meter Reading after a signal has been tuned in. The Limiter, Tone and A.F. Gain controls do not affect the S-Meter reading.

Tuning the Receiver to a signal will cause the S-Meter to read, indicating the signal input in S-units from 1 to 9 and in decibels above the S-9 level from zero to 40 db. With no R.F. input to the Receiver, or with the antenna disconnected, the S-Meter should read zero plus or minus one-half an S-unit. If it does not the S-Meter circuit compensator requires adjustment. See Section 4-7 for adjustment procedure.

Design of the S-Meter actuating circuit is such that a signal stronger than 40 db. above S-9 cannot cause the meter pointer to come in violent contact with the full-scale meter stop pin thus preventing the possible bending of the meter pointer.

For the purpose of comparing strong signals, which cause the meter pointer to read full scale, with other stronger and/or weaker signals the sensitivity of the S-Meter may be lowered by retarding the R.F. Gain control.

Measurements of the signal strength of C.W. signals cannot be made with the C.W. oscillator in operation.

With the Receiver A.C.-On-Off switch set at Off the meter pointer will return to its mechanical zero located on the right hand or 40 db. end of the meter.

©John F. Rider

Compliments of www.nucow.com

SECTION 4. ALIGNMENT DATA

4-1. GENERAL

All circuits in the HRO-50 Receiver are carefully aligned before shipment using precision test equipment insuring accurate conformability to the alignment frequency. No realignment of the various adjustments will be required unless the Receiver is tampered with or component parts or tube replacements have been necessary.

A definite need for realignment can be determined by checking the performance of the Receiver against its normal operation as outlined in Section 3. A simple check to assure the need of realignment of the I.F. Amplifier is provided in paragraph 4-2. of this section. In no case should realignment be attempted unless tests indicate that such realignment is necessary. Even then it must be remembered that the HRO-50 is a communications Receiver and should not be serviced or realigned by any individual who does not have a complete understanding of the functioning of the equipment and who has not had previous experience adjusting receivers of this type.

Complete alignment of the Receiver can be divided into three steps as follows:

(a) Intermediate Frequency Amplifier alignment including crystal filter adjustments.
(b) General Coverage Alignment
(c) Bandspread Alignment

All circuits must be tuned in the above order when complete alignment is required. All alignment adjustments and controls are shown on Figure Numbers 6, 7 and 10.

4-2. I.F. AMPLIFIER CHECK

The making of any adjustment indiscriminately is cautioned against and no circuit should be realigned unless tests definitely indicate that realignment is necessary.

The alignment of the intermediate frequency amplifier may be easily checked in the following manner:

1. Adjust the Receiver for normal operation with the antenna disconnected.
2. Connect a pair of headphones to the Phones jack.
3. Set the A.V.C. switch at Off.
4. Set the Control switch at C.W.
5. Set the Phasing control at zero.
6. Set the Selectivity switch at 5.
7. Set the R.F. Gain control at 10.

The setting of the A.F. Gain control does not affect the measurement and may be adjusted to provide sufficient headphone output to make the required observations. Adjust the C.W.O. control until a point is found where the predominant pitch of the background noise is lowest and a distinct crystal ring is heard. Note this setting of the C.W.O. control. Disconnect the crystal filter from the circuit by turning the Selectivity switch to the Off position. Once more adjust the C.W.O. control for the lowest predominant pitch of background noise and note the setting. If the I.F. amplifier is correctly aligned to the crystal filter frequency the

©John F. Rider

Compliments of www.nucow.com

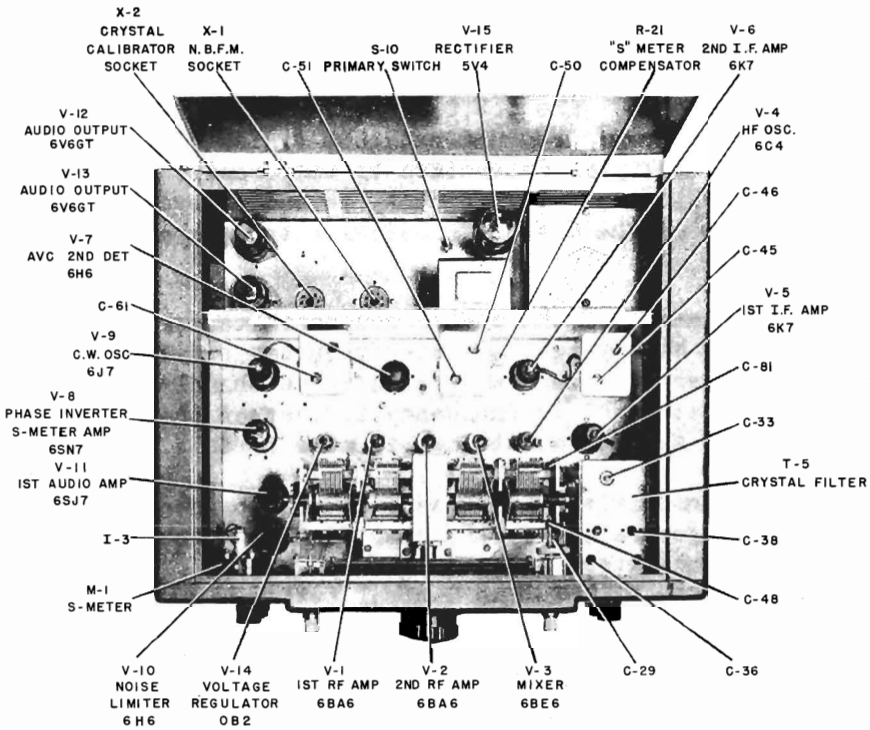

Figure No. 6. Top View of Receiver

setting of the C.W.O. control will be the same for both tests outlined above. If the two settings differ perform the complete I.F. Amplifier alignment procedures in following paragraph 4-3.

4-3. I.F. AMPLIFIER ALIGNMENT

The intermediate frequency of the HRO-50 is 455 kilocycles plus or minus 2 kilocycles. The exact frequency is determined by the quartz crystal resonator, Y-1, used in the crystal filter.

The I.F. transformers, crystal filter and C.W. oscillator transformer are fitted with individual air-type variable trimmer capacitors for alignment purposes. These adjustments are located on Figure Numbers 6 and 10.

The preliminary alignment procedure is as follows:

(1) Connect the high output lead of an accurately calibrated signal generator to the stator portion of the mixer section of the main tuning capacitor, C-5C, and the grounded lead to any convenient point on the chassis. This is a direct connection.

(2) Connect an output meter having an 8 or 500 ohm resistive load to the matching output terminals on the Receiver. As an alternative a high-impedance A.C. voltmeter may be connected to the phones jack.

(3) Set the Control switch at C.W.

(4) Set the A.V.C. switch at Off.

(5) Set the Phasing control at zero.

(6) Set the Selectivity switch at 5.

(7) Set the A.F. Gain control at 10.

(8) Set the R.F. Gain control at 9.

(9) Turn the modulation of the signal generator off to provide a steady

©John F. Rider

Compliments of www.nucow.com

C.W. test signal tuned to approximately 455 kilocycles.

Adjust the output attenuator of the signal generator to provide a signal of approximately 100 microvolts. The C.W.O. control must be set to provide an audio beat-note at some frequency between 400 and 1000 cycles per second. The presence of this beat note can readily be determined by temporarily connecting headphones or a Loudspeaker to the Receiver. If difficulty is encountered in obtaining such a beat-note an adjustment of the C.W.O. transformer trimmer capacitor, C-61, must be made.

Vary the tuning control of the signal generator very slowly between the frequencies of 453 and 457 kilocycles. At one frequency between these limits the I.F. amplifier of the receiver will show a very definite sharply peaked response, as indicated on the output meter. This frequency is that of the crystal filter crystal, Y-1, and I.F. alignment, as outlined below, is made at this frequency.

While making I.F. amplifier adjustments it will be necessary to retard the attenuator of the signal generator if I.F. amplifier gain increases to a point where overload occurs. Without altering the frequency setting of the signal generator set the Selectivity switch at Off, the Control switch at A.M. and turn the modulation of the signal generator On. The I.F. trimmer capacitors C-33, C-39, C-45, C-46, C-50 and C-51 should at this point each be carefully adjusted to give a maximum reading on the output meter. The order in which these adjustments are performed is not important.

Upon completion of the above adjustments set the Selectivity switch at 1. Set the frequency of the signal generator 2 kilocycles higher and adjust the crystal filter trimmer capacitor, C-33, for a maximum output meter indication. After making this adjustment set the Selectivity control at Off and return the signal generator to the exact crystal frequency (2 kilocycles lower). Tune the Selectivity compensating trimmer capacitor, C-38, for a maximum reading on the output meter.

The Phasing control as set at the factory should need no further attention. When correctly set a predominant decrease in background level will be found with the Selectivity switch at position 5 and the Phasing control set at zero. This same null point should be found by rotating the Phasing control exactly 180 degrees. If not, a slight adjustment of the phase balancing capacitor, C-36, will provide the proper setting.

Turn the modulation of the signal generator Off and set the Control switch at C.W. Rotate the C.W.O. control to its full clockwise position. If in this position the dial control does not coincide with 5 on its scale loosen the dial knob and reset it at 5. Set the C.W.O. control to zero beat with the signal generator signal. If zero beat does not occur at 0 on the control dial carefully readjust the air trimmer capacitor, C-61, of the C.W. oscillator transformer, T-8.

4-4. GENERAL COVERAGE ALIGNMENT

The data given in this section applies to the General Coverage alignment of the H.F. oscillator and R.F. amplifier stages of all coil sets. The original alignment at the National Laboratories is accomplished by the use of precision, crystal-controlled test oscillators. No realignment should be attempted unless a reliable test signal source is available. In the case of General Coverage H.F. oscillator alignment, a test signal source with an accuracy of 1% or better is required. For Bandspread alignment the calibration accuracy demands that the test signal source have the accuracy of precision-calibrated crystals. The entire range

©John F. Rider

Compliments of www.nucow.com

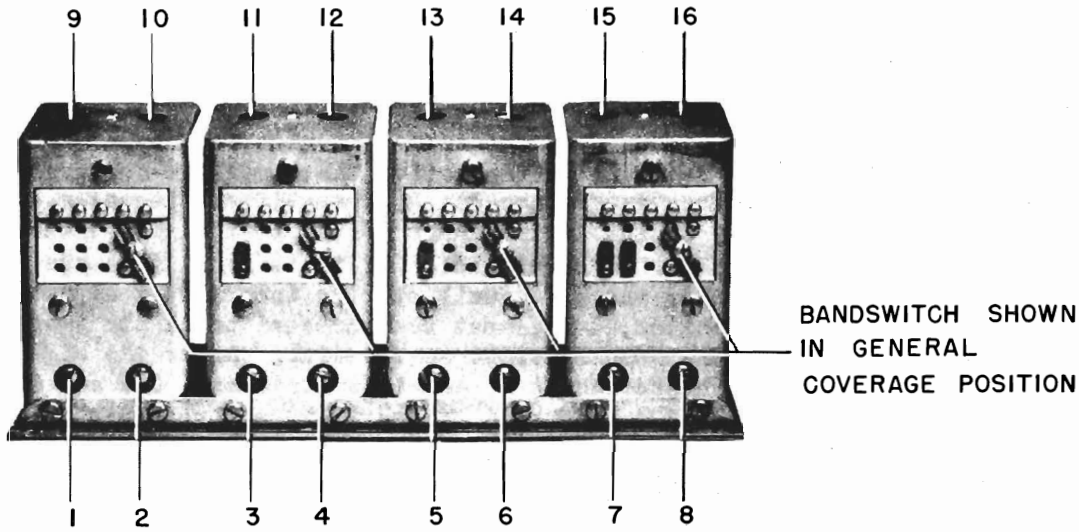

NOTE: INDUCTANCE ADJUSTMENTS AT POSITION NO. 16 ARE AS FOLLOWS:

1. A, B & C COIL SETS---LOOP OF WIRE INSIDE COIL FORM---BENDING THE LOOP ONE WAY OR THE OTHER ADDS OR SUBTRACTS TO THE INDUCTANCE.
2. D COIL SET---ADJUSTABLE DISC INSIDE COIL FORM---MOVING THE DISC TOWARD THE CENTER OF THE COIL DECREASES INDUCTANCE.
3. E, F, G, H & J COIL SETS---A SHORT-CIRCUITED TURN OF WIRE AROUND THE OUTSIDE OF THE COIL---MOVING THIS TURN UP OR DOWN VARIES THE INDUCTANCE.

INDUCTANCE ADJUSTMENT AT POSITION NOS. 9, 11 & 13 OF COIL SETS A, B, C, D, AA, AB & AC IS A LOOP OF WIRE INSIDE COIL FORM---BENDING THE LOOP ONE WAY OR THE OTHER VARIES THE INDUCTANCE.

Figure No. 7. Typical Coil Set Showing Alignment Adjustment Locations

of test frequencies required may be obtained by the use of nine crystals operating at their fundamental and harmonic frequencies. The frequency of these crystals is as follows: 0.05, 0.1, 1.0, 2.0, 3.5, 5.0, 6.8, 7.0, 7.3, 14.4 and 15 megacycles.

The need for realignment of the H.F. oscillator of any band is indicated when the frequency calibration of the Receiver dial is in error by more than 1% at the high frequency end of the band in question. If it is determined that realignment is necessary proceed as follows:

(1) Connect an output meter to the Receiver as described in paragraph 4-3 of this Section and disconnect the antenna.
(2) Set the Control switch at A.M.
(3) Set the A.V.C. switch at Off.
(4) Set the Selectivity switch at Off.
(5) Set the R.F. Gain control at 10.
(6) Set the Bandspread switch in the General Coverage position.
(7) Set the A.F. Gain control to provide a suitable output level.
(8) Check the position of the Ant. Trim. and Osc. trimmer controls.

Alignment should be made with both of the pointers on these controls in a vertical position with the arrow-head pointed towards the top of the Receiver.

©John F. Rider

Compliments of www.nucow.com

The following Alignment Chart gives the step-by-step procedure to follow in effecting the General Coverage alignment of each coil set. It is important that the chart of adjustments is adhered to in the order shown. It will be noted that General Coverage alignment affects Bandspread alignment, but that adjustment of Bandspread alignment does not affect General Coverage.

Particular care must be taken when adjusting the high-frequency oscillator trimmer, C-26, in each coil set. It is imperative that the high-frequency oscillator is set to operate at a frequency above the R.F. amplifier frequency and not below. This can be checked by tuning in the image of the test signal which must appear 910 kilocycles lower on the Receiver dial. If it is found that the image does not appear at this dial setting the H.F. oscillator is incorrectly adjusted and the capacity of the trimmer capacitor, C-26, must be decreased until the image and fundamental signals appear at the proper points on the dial. After the high-frequency oscillator is correctly calibrated the R.F. amplifier trimmers, C-2 and C-15, and the mixer trimmer, C-21, should be adjusted for maximum receiver gain as measured by the output meter. Coil sets A and D do not use a first R.F. amplifier trimmer but are peak-tuned by the use of the Ant. Trim. control over the full frequency range of each coil set. It may be desirable to align the R.F. Amplifier trimmers, C-2 and C-15, and the mixer trimmer, C-21, using Receiver background noise as an indication of maximum gain, rather than the signal source. If this alternate method of alignment is used the point of maximum gain is that setting of the trimmers which provides the loudest Receiver background noise. However, it is possible to align the R.F. amplifier and mixer stages to the image frequency using background noise as an indicator. A check of this possibility is to tune in the image signal -- if the image is weaker than the fundamental signal the R.F. amplifier and mixer stages are correctly aligned.

Correction of tracking errors of the R.F. amplifier and mixer stages at the low frequency limit of each coil set is accomplished by the adjustments listed on the Alignment Chart. The actual tracking of these stages may be checked by pressing the outside rotor plates of the main tuning capacitor section toward or away from the stator in a manner assuring that the rotor plates will spring back to their original position. Any change in capacity should decrease the Receiver gain if the stage is tracking properly.

The locations of the adjustments referred to on the General Coverage Chart are shown on Figure Number 7. Each variable on the chart is followed by a number in parenthesis to identify its position on the respective coil set. Schematic diagrams of each of the plug-in coil sets are furnished on Figure Numbers 11 and 12.

GENERAL COVERAGE CHART

Step	Coil Set	Adjust Signal Source and Receiver To:	Adjust to Receive Test Signal	Adjust for Maximum Output
1	A	30.0 Mc.	Trimmer capacitor C-26 (Pos. 8).	Trimmer capacitors C-21 (Pos. 6), C-15 (Pos. 4).
2	A	14.4 Mc.	Inductance at Pos. No. 16.	Inductance at Pos. Nos. 13, 11, 9.
3	A	30.0 Mc.		Check step 1. Repeat steps 1 and 2 if necessary.

©John F. Rider

Compliments of www.nucow.com

GENERAL COVERAGE CHART (CONT'D)

Step	Coil Set	Adjust Signal Source and Receiver To:	Adjust to Receive Test Signal	Adjust for Maximum Output
1	B	14.4 Mc.	Trimmer capacitor C-26 (Pos. 8).	Trimmer capacitors C-21 (Pos. 6), C-15 (Pos. 4), C-2 (Pos. 2).
2	B	7.0 Mc.	Inductance at Pos. No. 16.	Inductance at Pos. Nos. 13, 11, 9.
3	B	14.4 Mc.		Check step 1. Repeat steps 1 and 2 if necessary.
1	C	7.3 Mc.	Trimmer capacitor C-26 (Pos. 8).	Trimmer capacitors C-21 (Pos. 6), C-15 (Pos. 4), C-2 (Pos. 2).
2	C	3.5 Mc.	Inductance at Pos. No. 16.	Inductance at Pos. Nos. 13, 11, 9.
3	C	7.3 Mc.		Check step 1. Repeat steps 1 and 2 if necessary.
1	D	4.0 Mc.	Trimmer capacitor C-26 (Pos. 8).	Trimmer capacitors C-21 (Pos. 6), C-15 (Pos. 4), C-2 (Pos. 2).
2	D	1.8 Mc.	Inductance at Pos. No. 16.	Inductance at Pos. Nos. 13, 11, 9.
3	D	4.0 Mc.		Check step 1. Repeat steps 1 and 2 if necessary.
1	E	2.0 Mc.	Trimmer capacitor C-26 (Pos. 8).	Trimmer capacitors C-21 (Pos. 6), C-15 (Pos. 4).
2	E	1.0 Mc.	Padder capacitor C-100 (Pos. 7).	
3	E	1.4 Mc.	Inductance at Pos. No. 16.	
4	E	2.0 Mc.		Check step 1. Repeat steps 1,2 and 3 if necessary.
1	F	0.9 Mc.	Trimmer capacitor C-26 (Pos. 8).	Trimmer capacitors C-21 (Pos. 6), C-15 (Pos. 4), C-2 (Pos. 2).

©John F. Rider

Compliments of www.nucow.com

MODEL HRO-50

GENERAL COVERAGE CHART (CONT'D)

Step	Coil Set	Adjust Signal Source and Receiver To:	Adjust to Receive Test Signal	Adjust for Maximum Output
2	F	0.5 Mc.	Padder capacitor C-100 (Pos. 7).	
3	F	0.7 Mc.	Inductance at Pos. No 16.	
4	F	0.9 Mc.		Check step 1. Repeat steps 1, 2 and 3 if necessary.
1	G	400 Kc.	Trimmer capacitor C-26 (Pos. 8).	Trimmer capacitors C-21 (Pos. 6), C-15 (Pos. 4).
2	G	200 Kc.	Padder capacitor C-100 (Pos. 7).	
3	G	300 Kc.	Inductance at Pos. No. 16.	
4	G	400 Kc.		Check step 1. Repeat steps 1, 2 and 3 if necessary.
1	H	200 Kc.	Trimmer capacitor C-26 (Pos. 8).	Trimmer capacitors C-21 (Pos. 6), C-15 (Pos. 4), C-2 (Pos. 2).
2	H	100 Kc.	Padder capacitor C-100 (Pos. 7).	
3	H	150 Kc.	Inductance at Pos. No. 16.	
4	H	200 Kc.		Check step 1. Repeat steps 1, 2 and 3 if necessary.
1	J	100 Kc.	Trimmer capacitor C-26 (Pos. 8).	Trimmer capacitors C-21 (Pos. 6), C-15 (Pos. 4), C-2 (Pos. 2).
2	J	50 Kc.	Padder capacitor C-100 (Pos. 7).	
3	J	75 Kc.	Inductance at Pos. No. 16.	
4	J	100 Kc.		Check step 1. Repeat steps 1, 2 and 3 if necessary.
1	AA	30 Mc.	Trimmer capacitor C-26 (Pos. 7).	Trimmer capacitors C-21 (Pos. 5), C-15 (Pos. 3), C-2 (Pos. 1).

©John F. Rider

Compliments of www.nucow.com

GENERAL COVERAGE CHART (CONT'D)

Step	Coil Set	Adjust Signal Source and Receiver To:	Adjust to Receive Test Signal	Adjust for Maximum Output
2	AA	27.2 Mc.	Padder capacitor C-25 (Pos. 8).	Padder capacitors C-20 (Pos. 6), C-14 (Pos. 4), C-1 (Pos. 2).
3	AA	28 Mc.	Inductance at Pos. No. 16.	Inductance at Pos. Nos. 13, 11, 9.
4	AA	30 Mc.		Check step 1. Repeat steps 1, 2 and 3 if necessary.
1	AB	35 Mc.	Trimmer capacitor C-26 (Pos. 8).	Trimmer capacitors C-21 (Pos. 6), C-15 (Pos. 4), C-2 (Pos. 2).
2	AB	25 Mc.	Padder capacitor C-100 (Pos. 7).	Padder capacitors C-99 (Pos. 5), C-98 (Pos. 3), C-97 (Pos. 1).
3	AB	30 Mc.	Inductance at Pos. No. 16.	Inductance at Pos. Nos. 13, 11, 9.
4	AB	35 Mc.		Check step 1. Repeat steps 1, 2 and 3 if necessary. Check step 1.
1	AC	21.5 Mc.	Trimmer capacitor C-26 (Pos. 7).	Trimmer capacitors C-21 (Pos. 5), C-15 (Pos. 3), C-2 (Pos. 1).
2	AC	21 Mc.	Padder capacitor C-25 (Pos. 8).	Padder capacitors C-20 (Pos. 6), C-14 (Pos. 4), C-1 (Pos. 2).
3	AC	21.3 Mc.	Inductance at Pos. No. 16.	Inductance at Pos. Nos. 13, 11, 9.
4	AC	21.5 Mc.		Check step 1. Repeat steps 1, 2 and 3 if necessary. Check step 1.

©John F. Rider

Compliments of www.nucow.com

4-5. BANDSPREAD ALIGNMENT

The data given in this section applies to the Bandspread Alignment of the high-frequency oscillator, R.F. amplifier and mixer stages of coil sets A, B, C and D. It is important that no Bandspread adjustments are made until after completion of General Coverage alignment as General Coverage adjustments affect Bandspread alignment.

The need for realignment of the H.F. oscillator of any band is indicated when the frequency calibration of the main tuning dial is in error by more than ±5 divisions. To effect alignment the Receiver controls are adjusted the same as outlined in Section 4-4. except that the Bandspread switch on each of the plug-in coils must be in the right-hand or Bandspread position.

The procedure in effecting Bandspread alignment is accomplished by adhering to the instructions given in the Bandspread Alignment Chart. The procedure is similar to that for General Coverage except for the method followed in checking tracking errors of the R.F. amplifier and mixer stages at the low-frequency limit of each coil set. To secure an indication of proper tracking check the setting of the Bandspread trimmer capacitors C-3, C-16 and C-22 for the position of maximum Receiver gain. Any change in capacity should decrease the Receiver gain indicating proper tracking. The use of the trimmer capacitors C-3, C-16 and C-22 for a tracking check may destroy their proper settings therefore they must be carefully rechecked at the high-frequency limit of the coil set. The location of the adjustments referred to in this section are shown on Figure Number 7. Each variable on the chart is followed by a number in parenthesis to identify its position on the respective coil set. Schematic diagrams of each of the four combination Bandspread and General Coverage coil sets A, B, C and D are furnished on Figure Number 11.

4-6. FIRST R.F. STAGE ALIGNMENT WITH LOW IMPEDANCE TRANSMISSION LINE

If a low impedance transmission line is to be used with the Receiver, it may be necessary to realign the first R.F. amplifier at the high-frequency end of each band. The tracking of the first R.F. amplifier stage on each of the coil ranges may be checked by rotating the Ant. Trim. control. If two definite peaks in output are observed while rotating the Ant. Trim control, the first R.F. amplifier stage is tracking correctly and the setting at either peak is correct. The lack of a peak in output or the presence of only one peak indicates the stage is not tracking properly and correction should be made. The General Coverage adjustments affect the Bandspread adjustments and must therefore be performed first. The following procedures should be adhered to:

(a) GENERAL COVERAGE

(1) Set the Bandspread switch on each coil to the left-hand side or General Coverage position. Adjust the Receiver for normal operation as follows: Control switch at A.M., Selectivity switch at Off, Ant. Trim control pointer set in a vertical position with the arrow head towards the top of the Receiver, A.F. Gain control set at 10 and the R.F. Gain control set to provide a suitable signal level.

(2) Connect the antenna feeders to the Receiver antenna terminals and tune the Receiver to the signal shown in step 1 on the General Coverage Alignment Chart for the coil set to be aligned. Adjust the trimmer capacitor, C-2, for maximum signal output. Coil sets A and D do not use a first R.F. amplifier General Coverage trimmer but are peak-tuned by the Ant. Trim. control over the full frequency range of each coil set.

©John F. Rider

Compliments of www.nucow.com

BANDSPREAD ALIGNMENT CHART

NOTE: Do not effect Bandspread Alignment until after completion of General Coverage.

Set	Coil Set	Adjust Signal Source and Receiver To:	Adjust to Receive Test Signal	Adjust for Maximum Output
1	A	30.0 Mc.	Trimmer capacitor C-27 (Pos. 7).	Trimmer capacitors C-22 (Pos. 5), C-16 (Pos. 3), C-3 (Pos. 1).
2	A	27.2 Mc.	Padder capacitor C-25 (Pos. 15).	Padder capacitors C-20 (Pos. 14), C-14 (Pos. 12), C-1 (Pos. 10).
3	A	30.0 Mc.		Check Step 1. Repeat Step 1 and 2 if necessary. Check Step 1.
1	B	14.4 Mc.	Trimmer capacitor C-27 (Pos. 7).	Trimmer capacitors C-22 (Pos. 5), C-16 (Pos. 3), C-3 (Pos. 1).
2	B	14.0 Mc.	Padder capacitor C-25 (Pos. 15).	Padder capacitors C-20 (Pos. 14), C-14 (Pos. 12), C-1 (Pos. 10).
3	B	14.4 Mc.		Check Step 1. Repeat Steps 1 and 2 if necessary. Check Step 1.
1	C	7.3 Mc.	Trimmer capacitor C-27 (Pos. 7).	Trimmer capacitors C-22 (Pos. 5), C-16 (Pos. 3), C-3 (Pos. 1).
2	C	7.0 Mc.	Padder capacitor C-25 (Pos. 15).	Padder capacitors C-20 (Pos. 14)., C-14 (Pos. 12), C-1 (Pos. 10).
3	C	7.3 Mc.		Check Step 1. Repeat Steps 1 and 2 if necessary. Check Step 1.
1	D	4.0 Mc.	Trimmer capacitor C-27 (Pos. 7).	Trimmer capacitors C-22 (Pos. 5), C-16 (Pos. 3), C-3 (Pos. 1).
2	D	3.5 Mc.	Padder capacitor C-25 (Pos. 15).	Padder capacitor C-20 (Pos. 14), C-14 (Pos. 12), C-1 (Pos. 10).
3	D	4.0 Mc.		Check Step 1. Repeat Steps 1 and 2 if necessary. Check Step 1.

©John F. Rider

Compliments of www.nucow.com

(b) BANDSPREAD

(1) With the Receiver adjusted in the same manner as for General Coverage shift the Bandspread switch on each coil terminal panel to the right-hand side or Bandspread position.

(2) Connect the Antenna feeders to the Receiver antenna terminal and tune the Receiver to the signal shown in Step 1 on the Bandspread Alignment Chart for the coil set being aligned. Adjust the Bandspread trimmer capacitor, C-3, for maximum signal output. If no signal can be received the trimmer may be adjusted for maximum background noise.

4-7. S-METER ADJUSTMENT

The S-Meter balancing resistor, R-21, is used to obtain a zero meter reading in the absence of signal input to the Receiver. To make this adjustment set the controls as follows: set the R.F. Gain control at 0, A.V.C. switch at A.V.C., Control switch at A.M. and the A.C. switch at On. Adjust the S-Meter balancing resistor, R-21, for a zero reading on the S-Meter. This is a screwdriver type adjustment located on the top of the chassis.

SECTION 5. MAINTENANCE

5-1. GENERAL MAINTENANCE DATA

Any repairs in the HRO-50 Receiver which necessitate resoldering of joints must be made with care. A good mechanical connection must be made before the solder is applied.

Failure of a vacuum tube in the receiver may reduce the sensitivity, produce intermittent operation or cause the equipment to be completely inoperative. In such cases, all tubes should be checked either in an analyzer or similar tube testing equipment or by replacement with tubes of proven quality. When any tube is tested, it should be tapped or jarred to make sure that it has no internal loose connection or intermittent short circuit.

Tubes of the same type will vary slightly in their individual characteristics and this fact should be borne in mind when replacements become necessary. The C.W. oscillator, high-frequency oscillator and I.F. tubes should be chosen with care to select a replacement which most nearly approaches the characteristic of the original tube. A replacement high frequency oscillator tube can be readily checked by noting any change in dial calibration, particularly on the amateur bandspread bands. Substitution of new I.F. amplifier tubes may possibly alter overall gain and selectivity characteristics. The necessity for realignment as well as alignment procedure is discussed in Section 4.

In case of breakdown or failure of the Receiver, the fault must first be localized. This can often be accomplished by observation of some peculiar action of one of the controls. Reference to the circuit diagram will aid in checking voltages at the various tube elements. Measurement of voltages in accordance with Section 5-4. will most likely indicate where failure has occurred.

5-2. CIRCUIT FAILURES

All component parts in the HRO-50 Receiver have been selected to assure an ample factor of safety. Failure may occur in individual cases and the most common

©John F. Rider

Compliments of www.nucow.com

cause of failure, excluding tubes, will probably be due to breakdown of a capacitor or resistor.

Bypass or filter capacitors which develop poor connections internally, or which become open-circuited, will cause decreased sensitivity, oscillation or poor stability. The defective unit can be located by temporarily connecting a good capacitor in parallel with each capacitor that is under suspicion.

Failure of any bypass or filter capacitor may seriously overload resistors in associated circuits. Overload of sufficient magnitude to permanently damage a resistor will cause the surface of the resistor to be scorched, making the defective unit easy to locate by visual inspection.

Open or short-circuited resistors can be definitely located by measuring the resistance of each individual resistor. The schematic diagram should be consulted to make sure that any particular resistor under test is not connected in parallel with some other circuit element which might produce a false measurement.

Loose connections which cause intermittent or noisy operation can often be found by tapping, or shaking any component under suspicion with the Receiver adjusted for normal operation.

5-3. STAGE GAIN MEASUREMENTS

The sensitivity measurements listed herein are made with the Receiver set up as specified in Section 3-2 except that the A.F. Gain control is set at 10. Connect an output meter with an impedance to match the Receiver output circuit i.e., 8 or 500 ohms to the output terminal panel in place of the Loudspeaker. It is important that the proper output impedance match be observed.

Connect the high output lead of the signal generator through a 0.01 mf coupling capacitor to the grid cap of each tube as specified in the following table. The ground lead of the generator is connected to any convenient chassis point.

The signal generator, using modulation, is varied between 453 and 457 kilocycles until a pronounced peak reading is obtained on the output meter.

With the generator attenuated to provide a one watt reading on the output meter the signal generator attenuator should read within the limits specified in the following table:

TERMINAL	TEST SIGNAL
Mixer Grid	100 ± 25 Microvolts
First I.F. Grid	1800 ± 100 Microvolts
Second I.F. Grid	80,000 ±5000 Microvolts

5-4. VOLTAGE TABULATION

All voltage measurements should be made using a high-impedance vacuum tube voltmeter. Readings taken with any other type of instrument will differ somewhat depending upon the input resistance of the meter. Voltmeter resistance should be ten times larger than the resistance of the circuit across which the voltage is measured otherwise the voltmeter will indicate a voltage lower than the actual voltage present. The tube socket voltage tabulations contained in Figure Number 8 were taken using a vacuum tube voltmeter with an input resistance of 11 megohms. All voltages are

©John F. Rider

Compliments of www.nucow.com

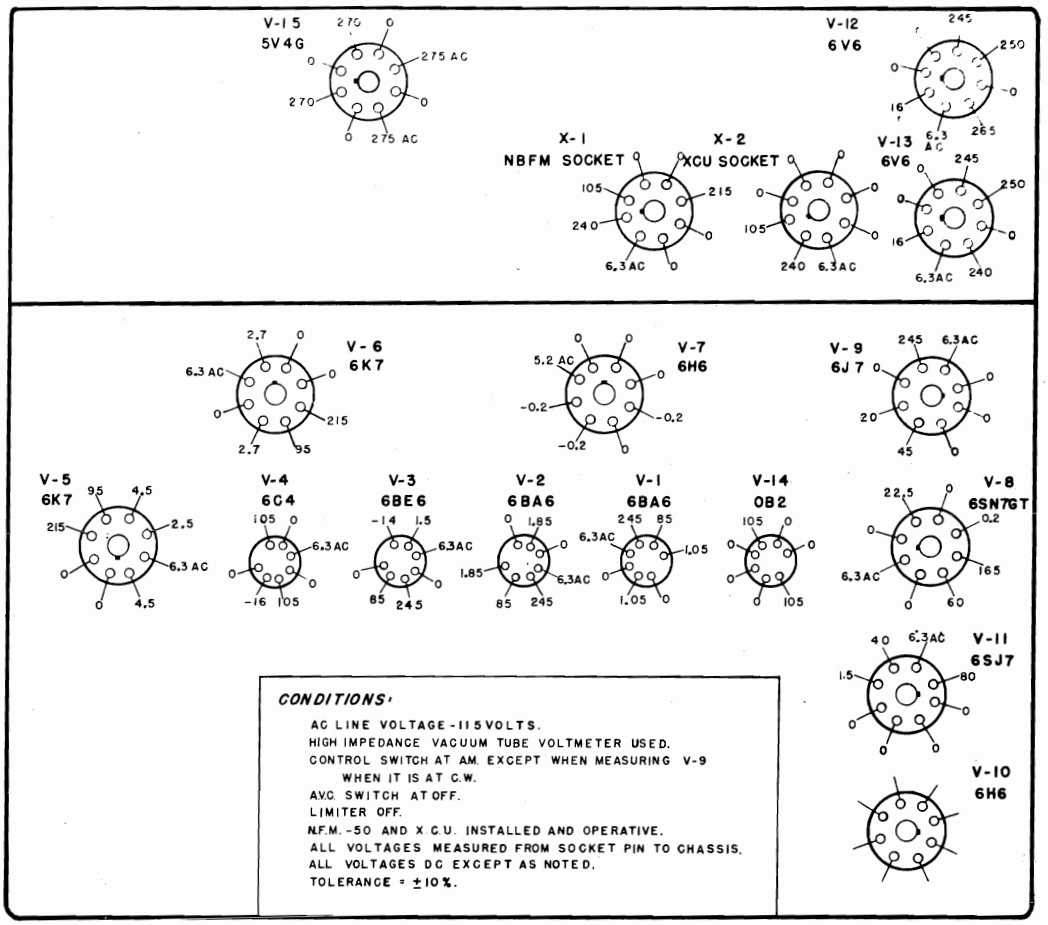

Figure No. 8. Tube Socket Voltages

measured between specified socket terminals and chassis. The control settings to be observed are shown on Figure Number 8.

5-5. MAIN TUNING DIAL

The main tuning dial should normally give no trouble. If, however, the dial should become removed from the Receiver it must NOT be operated until mounted on the capacitor shaft WITH SET-SCREWS TIGHT. This is because the dial is only designed to rotate for ten revolutions (0 to 500) and if turned farther than this the mechanism will be damaged. When mounted on the capacitor, limit stops protect the dial provided the assembly is made properly. The procedure for re-mounting the dial is as follows:

(a) Place the dial on the capacitor shaft, tighten set-screws and turn dial counter-clockwise to fully mesh capacitor rotor plates so that the tips of the rotor plates are flush with the edge of the stator plates.

(b) Loosen set-screws and rotate dial slowly until the dial reading has decreased to zero.

(c) Tighten the set-screws.

(d) Check position of rotor plates at zero. The tips of the rotor plates

©John F. Rider

Compliments of www.nucow.com

must be flush with the edge of the stator plates. A slight adjustment may be necessary and this is done by loosening the set-screws, adjusting the position of the dial and tightening the set-screws again.

If it is necessary to remove the dial at any future time, turn to 250 before removing the dial and do not disturb the setting of either the dial or capacitor until reassembled. If in doubt about the correct position, inspect the springs on the back of the dial. When the dial reads 250 these springs should be straight-up-and-down, they must not be tipped to one side.

It is important that the backplate and dial do not become separated. The backplate is held in place by two springs so that its gear teeth mesh with the dial gear teeth in correct relationship for proper dial operation. If this backplate should be sprung out of place, it may return to an incorrect position and the proper dial numbers will not appear in the windows when the dial is used. To ascertain that the two parts are in correct position, proceed as follows:

(a) Locate small window near outer periphery of dial backplate and also locate dial number window on face of dial which is 180° removed from the small backplate window.

(b) Hold dial so backplate lies flat in palm of left-hand and with right hand rotate dial knob until 250 appears in previously located dial window.

(c) If dial is properly adjusted it will be noted that the pointer at the outer edge of the small window lines up with a marked tooth on the dial itself. It will be found that the dial and backplate can be moved so that the backplate pointer will mesh between teeth at points equi-distant from marked tooth in either direction.

(d) If by checking as in paragraph (c), the dial is found not properly adjusted, it will be necessary to separate the backplate from the dial far enough to bring the two gears out of mesh and then re-mesh the two parts until the proper setting is found. A number of trial settings may be required before the correct mesh is found.

5-6. SLIDE-RULE TUNING DIAL

The slide-rule tuning dial assembly has been adjusted at the factory for accurate synchronization with the micrometer dial. If not tampered with this mechanism will provide complete freedom of mechanical trouble over a long period of continuous use. It is driven by an anti-backlash tuning gear ganged with the main tuning dial. The slide-rule dial pointer is controlled by a string-drive assembly.

If replacement of the string-drive cord is required it will be necessary to remove the Receiver chassis from its cabinet or wraparound. Before removing the micrometer dial reference should be made to Paragraph 5 of this section for proper method of removal. Figure Number 9 illustrates the proper method of replacing the cord. After the cord has been replaced and before the Receiver is returned to its cabinet the micrometer dial should temporarily be replaced (See Paragraph 5-5.) and the slide-rule pointer correctly set in the following manner:

NOTE

This procedure may also be used if a check is desired to assure that the slide-rule dial pointer is properly synchronized with that of the main tuning dial.

©John F. Rider

Compliments of www.nucow.com

(a) Check the main tuning dial at zero on its dial scale. The tips of the rotor plates should be flush with the edge of the stator plates.

(b) Set the Band selector control so that the D coil set scale appears.

(c) Set the main tuning dial at 490 on its dial scale. Correct setting of the slide-rule dial pointer is 4 megacycles on the dial scale. Draw the slide-rule pointer along the cord to its proper position being careful not to disturb the setting on the micrometer dial. After the correct setting has been obtained use a small amount of glyptol or household cement to fastem the dial pointer securely in place on the cord.

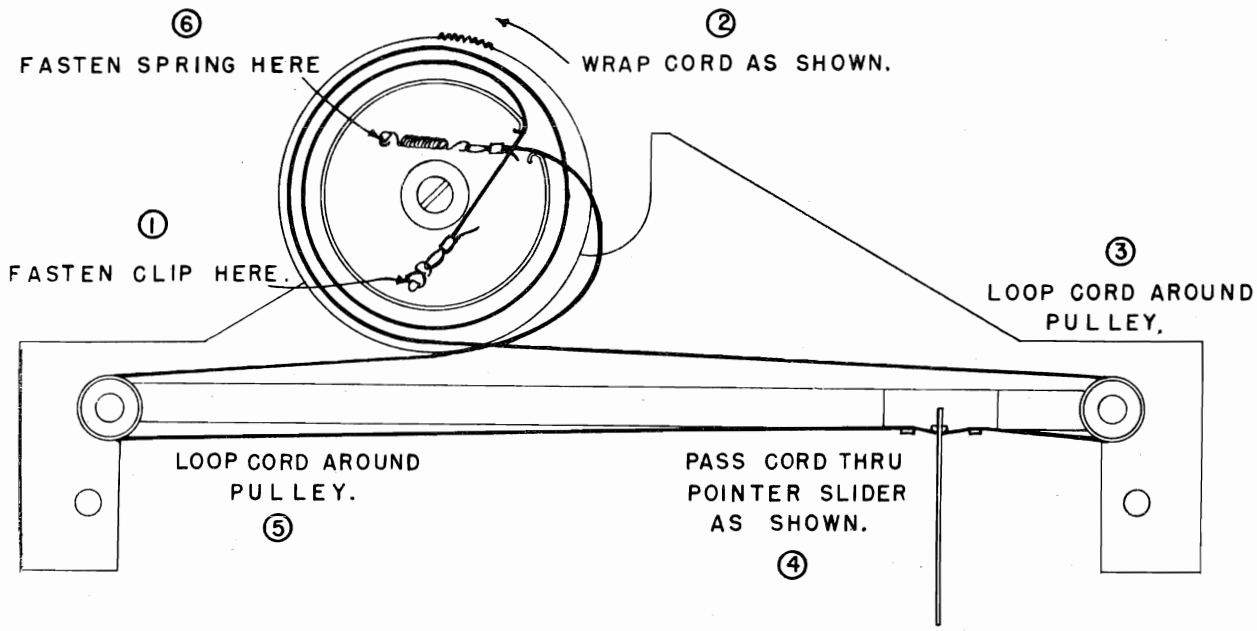

NOTE: *CORD SHOWN EXPOSED FOR CLARITY. CORD LENGTH 33 7/8" INCLUDING SPRING AND CLIP.*

Figure No. 9. Instructions for Dial Cord Replacement

PARTS LIST

SYMBOL	FUNCTION	DESCRIPTION	NAT. CO. TYPE
		CAPACITORS	
C-1	T-1 Bandspread Padder used on A, B, C, D, AA and AC Coil sets	Variable, air dielectric	
C-2	T-1 General Coverage Trimmer used on B, C, F, H, J, AA, AB and AC coil sets	Variable, air dielectric	
C-3	T-1 Bandspread Trimmer used on A, B, C and D coil sets	Variable, air dielectric	
C-4	Antenna Trimmer	Variable, air dielectric	
C-5	Main Tuning	Four-section ganged, air dielectric, 225 mmf. max. per section	SA:6592

©John F. Rider

Compliments of www.nucow.com

PARTS LIST (CONT'D.)

SYMBOL	FUNCTION	DESCRIPTION	NAT. CO. TYPE
	CAPACITORS (CONT'D.)		
C-5A	V-1 Tuning	Part of C-5	
C-5B	V-2 Tuning	Part of C-5	
C-5C	V-3 Tuning	Part of C-5	
C-5D	V-4 Tuning	Part of C-5	
C-6	V-1 Grid Filter	Ceramic, .005 mfd., 450 vdcw	K946-1
C-7	V-1 Grid Filter	Ceramic, .005 mfd., 450 vdcw	K946-1
C-8	V-1 Grid Filter	Mica, .01 mfd., 300 vdcw	J666-56
C-9	V-1 Cathode Bypass	Paper, .1 mfd., 400 vdcw	D927-11
C-10	V-1 Screen Bypass	Ceramic, .005 mfd., 450 vdcw	K946-1
C-11	V-1 Screen Bypass	Paper, .1 mfd., 400 vdcw	D827-11
C-12	V-1 Plate Filter	Paper, .1 mfd., 600 vdcw	D827-13
C-13	V-2 Grid Return Bypass	Ceramic, .005 mfd., 450 vdcw	K946-1
C-14	T-2 Bandspread Padder used on A, B, C, D, AA and AC coil sets	Variable, air dielectric	
C-15	T-2 General Coverage Trimmer used on all coil sets	Variable, air dielectric	
C-16	T-2 Bandspread Trimmer used on A, B, C, D coil sets	Variable, air dielectric	
C-17	V-2 Cathode Bypass	Paper, .1 mfd., 400 vdcw	D827-11
C-18	V-2 Screen Bypass	Ceramic, .005 mfd., 450 vdcw	K946-1
C-19	V-2 Plate Filter	Paper, .1 mfd., 600 vdcw	D827-13
C-20	T-3 Bandspread Padder used on A, B, C, D, AA and AC coil sets	Variable, air dielectric	
C-21	T-3 General Coverage Trimmer used on all coil sets	Variable, air dielectric	
C-22	T-3 Bandspread Trimmer used on A, B, C, D coil sets	Variable, air dielectric	
C-23	V-3 Cathode Bypass	Paper, .1 mfd., 400 vdcw	D827-11
C-24	V-3 Screen Bypass	Paper, .1 mfd., 400 vdcw	D827-11
C-25	T-4 Bandspread Padder used on A, B, C, D, AA and AC coil sets	Variable, air dielectric	
C-26	T-4 General Coverage Trimmer used on all coil sets	Variable, air dielectric	
C-27	T-4 Bandspread Trimmer used on A, B, C, D coil sets	Variable, air dielectric	
C-28	T-4 General Coverage Padder		
	A coil set	Mica, .0012 mfd., 300 vdcw	J666-63
	B coil set	Mica, .0026 mfd., 500 vdcw	J666-61
	C coil set	Mica, .0016 mfd., 500 vdcw	J666-21
	D coil set	Mica, .0009 mfd., 500 vdcw	J666-62
	E coil set	Mica, 470 mmf., 500 vdcw	H500-18
	F coil set	Ceramic, 350 mmf., 500 vdcw	D825C-331
	G coil set	Ceramic, 100 mmf., 500 vdcw	D825C-304
	J coil set	Ceramic, 50 mmf., 500 vdcw	D825D-417
	AB coil set	Ceramic, 100 mmf., 500 vdcw	D825C-304
C-29	Calibration Adjustment Trimmer	Variable, air dielectric	
C-30	V-4 Grid	Ceramic, 100 mmf., 500 vdcw	D825D-421
C-31	V-4 Plate	Paper, .1 mfd., 400 vdcw	D827-11
C-32	V-4 to V-3 coupling	Mica, .01 mfd., 300 vdcw	J666-56

©John F. Rider

Compliments of www.nucow.com

MODEL PRO-50

PARTS LIST (CONT'D.)

SYMBOL	FUNCTION	DESCRIPTION	NAT. CO. TYPE
		CAPACITORS (CONT'D.)	
C-33	T-5 Primary Trimmer	Variable, air dielectric	
C-34	Bridge Balancing	Ceramic, 62 mmf., 500 vdcw	J695-3
C-35	Bridge Balancing	Ceramic, 47 mmf., 500 vdcw	J695-1
C-36	Phase Balance Adjustment	Mica, variable, 3.5 to 35 mmf.	D832-2
C-37	Phasing	Variable, air dielectric	SA:3655
C-38	Selectivity Compensator	Mica, variable, 3.5 to 35 mmf.	D832-2
C-39	T-5 output adjustment	Variable, air dielectric, 100 mmf.	SA:1841
C-40	Selectivity Adjusting	Ceramic, 5 mmf., 500 vdcw	D825D-401
C-41	Selectivity Adjusting	Ceramic, 10 mmf., 500 vdcw	D825D-426
C-42	Selectivity Adjusting	Ceramic, 10 mmf., 500 vdcw	D825D-426
C-43	V-5 A.V.C. Filter	Paper, .01 mfd., 600 vdcw	D827-7
C-44	V-5 Cathode Bypass	Paper, .1 mfd., 400 vdcw	D827-11
C-45	T-6 Primary Trimmer	Variable, air dielectric	
C-46	T-6 Secondary Trimmer	Variable, air dielectric	
C-47	V-6 A.V.C. Filter	Paper, .01 mfd., 600 vdcw	D827-7
C-48	Fixed, calibration padder	Ceramic, 10 mmf., 500 vdcw	D825D-437
C-49	V-6 Screen Bypass	Paper, .1 mfd., 400 vdcw	D827-11
C-50	T-7 Primary Trimmer	Variable, air dielectric	
C-51	T-7 Secondary Trimmer	Variable, air dielectric	
C-52	V-6 Plate Filter	Paper, .25 mfd., 600 vdcw	D827-19
C-53	V-7 Load	Ceramic, 270 mmf., 500 vdcw	J633-2
C-54	T-7 to V-7 Coupling	Ceramic, 100 mmf., 500 vdcw	D825D-421
C-55	A.V.C. Filter	Paper, .01 mfd., 600 vdcw	D825-7
C-56	V-9 to V-7 Coupling	Ceramic, 3 mmf., 500 vdcw	J695-4
C-57	V-9 Screen Bypass	Mica, .01 mfd., 300 vdcw	J666-56
C-58	C.W. Osc. Tuning	Variable, air dielectric	SA:6580
C-59	T-8 Grid	Mica, .001 mfd., 500 vdcw	J666-14
C-60	T-8 Fixed Tuning	Ceramic, 100 mmf., 500 vdcw	D825C-304
C-61	T-8 Tuning Adjusting	Variable, air dielectric	
C-62	D.C. Blocking	Paper, .01 mfd., 600 vdcw	D827-7
C-63	A.C. Line Bypass	Mica, .01 mfd., 300 vdcw	J666-56
C-64	A.C. Line Bypass	Mica, .01 mfd., 300 vdcw	J666-56
C-65	Power Supply Filter	Electrolytic, 40+40 mfd., 475 vdcw	K945-3
C-65A	Power Supply Input Filter	Part of C-65	
C-65B	Power Supply Output Filter	Part of C-65	
C-66	V-7 to V-10 Coupling	Paper, .01 mfd., 600 vdcw	D827-7
C-67	V-10 Threshold Filter	Paper, .1 mfd., 400 vdcw	D827-11
C-68	V-10 Plate Filter	Paper, .1 mfd., 400 vdcw	D827-11
C-69	V-10 to X-3 Coupling	Paper, .01 mfd., 600 vdcw	D827-7
C-70	Tone Compensator	Electrolytic, 25 mfd., 50 vdcw	E338-4
C-71	V-11 Cathode Bypass	Paper, .5 mfd., 100 vdcw	D827-49
C-72	V-11 Screen Bypass	Paper, .1 mfd., 400 vdcw	D827-11
C-73	V-11 Plate Filter	Paper, .1 mfd., 400 vdcw	D827-11
C-74	Tone	Paper, .01 mfd., 600 vdcw	D827-7
C-75	V-8B to V-11 Coupling	Paper, .01 mfd., 600 vdcw	D827-7
C-76	V-8B Grid Bypass	Ceramic, 100 mmf., 500 vdcw	D825D-421
C-77	V-8B to V-12 Coupling	Paper, .01 mfd., 600 vdcw	D827-7
C-78	V-8B to V-13 Coupling	Paper, .01 mfd., 600 vdcw	D827-7
C-79	V-12 and V-13 Cathode Bypass	Electrolytic, 25 mfd., 50 vdcw	E338-4
C-80	Tone Compensator	Mica, .0024 mfd., 1000 vdcw	J667-68
C-81	Temperature Drift Compensator	Ceramic, 5 mmf., 500 vdcw	H872-3
C-82	T-1 Fixed Bandspread Padder:	Ceramic, fixed,	
	A coil set	12 mmf., 500 vdcw	D825D-404
	B coil set	5 mmf., 500 vdcw	D825D-401

©John F. Rider

Compliments of www.nucow.com

PARTS LIST (CONT'D.)

SYMBOL	FUNCTION	DESCRIPTION	NAT. CO. TYPE
	CAPACITORS (CONT'D.)		
	C coil set	12 mmf., 500 vdcw	D825D-404
	D coil set	25.7 mmf., 500 vdcw	D825D-412
C-83	T-2 Fixed Bandspread Padder	Ceramic, fixed	
	A coil set	21 mmf., 500 vdcw	D825D-410
	B coil set	5 mmf., 500 vdcw	D825D-401
	C coil set	12 mmf., 500 vdcw	D825D-404
	D coil set	25.7 mmf., 500 vdcw	D825D-412
C-84	T-3 Fixed Bandspread Padder	Ceramic, fixed	
	A coil set	21 mmf., 500 vdcw	D825D-410
	B coil set	5 mmf., 500 vdcw	D825D-401
	C coil set	12 mmf., 500 vdcw	D825D-404
	D coil set	25.7 mmf., 500 vdcw	D825D-412
C-85	T-4 Bandspread Padder used on A coil set	Ceramic, 10 mmf., 500 vdcw	D825D-402
C-86	T-4 Fixed Divider used on D coil set	Ceramic, 21 mmf., 500 vdcw	D825D-410
C-87	T-4 Fixed General Coverage Trimmer	Ceramic, fixed	
	B coil set	10 mmf., 500 vdcw	D825D-437
	AA coil set	68 mmf., 500 vdcw	D825D-439
	AB coil set	68 mmf., 500 vdcw	D825D-439
	AC coil set	68 mmf., 500 vdcw	D825D-439
C-88	T-1 Fixed General Coverage Padder		
	A coil set	Mica, 1200 mmf., 500 vdcw	J666-16
	AB coil set	Ceramic, 120 mmf., 500 vdcw	D825C-305
C-89	T-4 Fixed Temperature Compensator used on B coil set	Ceramic, 10 mmf., 500 vdcw	D825D-437
C-90	T-2 Primary Trimmer used on H coil set	Ceramic, 21 mmf., 500 vdcw	D825D-410
C-91	T-1 General Coverage Trimmer	Ceramic, fixed,	
	AA coil set	5 mmf., 500 vdcw	D825D-401
	AB coil set	10 mmf., 500 vdcw	D825D-402
	AC coil set	50 mmf., 500 vdcw	D825D-417
C-92	T-2 coupling used on AB coil set	Mica, 470 mmf., 500 vdcw	J665-56
C-93	T-2 General Coverage Padder used on AB coil set	Ceramic, 100 mmf., 500 vdcw	D825C-304
C-94	T-3 Coupling used on AB coil set	Mica, 470 mmf., 500 vdcw	J665-56
C-95	T-3 General Coverage Trimmer	Ceramic, fixed,	
	AB coil set	5 mmf., 500 vdcw	D825D-401
	AC coil set	68 mmf., 500 vdcw	D825D-439
C-96	V-2 Cathode Bypass	Ceramic, .005 mfd., 450 vdcw	K946-1
C-97	T-1 General Coverage Padder used on AB coil set	Variable, air dielectric	
C-98	T-2 General Coverage Padder used on AB coil set	Variable, air dielectric	
C-99	T-3 General Coverage Padder used on AB coil set	Variable, air dielectric	
C-100	T-4 General Coverage Padder used on E, F, G, H, J and AB coil sets	Variable, air dielectric	

©John F. Rider

Compliments of www.nucow.com

MODEL HRO-50

C-101	T-3 General Coverage Padder used on AB coil set	Ceramic, 100 mmf., 500 vdcw	D825C-304
C-102	T-2 General Coverage Trimmer on AC coil set	Ceramic, 68 mmf., 500 vdcw	D825D-439
C-103	I.F. coupling to X-1	Ceramic, 10 mmf., 500 vdcw	D825D-402

RESISTORS

R-1	V-1 Grid Filter	Fixed, 470,000 ohms, 1/2 W.	J569-57
R-2	V-1 Cathode	Fixed, 100 ohms, 1/2 W.	J569-13
R-3	V-1 and V-2 Screen	Fixed, 2,200 ohms, 1/2 W.	J569-29
R-4	V-2 Grid Filter	Fixed, 470,000 ohms, 1/2 W.	J569-57
R-5	V-2 Cathode	Fixed, 560 ohms, 1/2 W.	J569-22
R-6	RF Gain Control	Variable, W.W., 10,000 ohms	K349-3
R-7	V-3 Injector Grid	Fixed, 22,000 ohms, 1/2 W.	J569-41
R-8	V-3 Cathode	Fixed, 220 ohms, 1/2 W.	J569-17
R-9	V-3 Screen	Fixed, 33,000 ohms, 1 W.	J571-43
R-10	V-4 Grid	Fixed, 22,000 ohms, 1/2 W.	J569-41
R-11	V-4 Plate	Fixed, 22 ohms, 1/2 W.	J569-5
R-12	V-5 Grid Filter	Fixed, 470,000 ohms, 1/2 W.	J569-57
R-13	V-1, V-2, V-4, V-5 Screen Bleeder	Fixed, 27,000 ohms, 2 W.	J572-42
R-14	V-5 Cathode	Fixed, 220 ohms, 1/2 W.	J569-17
R-15	V-5 Cathode	Fixed, 330/1000 ohms, 1/2 W.	
R-16	V-1, V-2, V-4, V-5 Screen Dropping	Fixed, 15,000 ohms, 2 W.	J572-39
R-17	V-5 Plate Filter	Fixed, 2,200 ohms, 1/2 W.	J569-29
R-18	V-6 Grid Filter	Fixed, 470,000 ohms, 1/2 W.	J569-57
R-19	V-6 Cathode	Fixed, 330 ohms, 1/2 W.	J569-19
R-20	V-8A Plate Load	Fixed, 47,000 ohms, 1/2 W.	J569-45
R-21	"S" Meter Zero Adjustment	Variable, W.W., 1000 ohms 1 W.	D831-2
R-22	V-7 Plate Load	Fixed, 1.5 meg., 1/2 W.	J569-63
R-23	AVC Filter	Fixed, 1.5 meg., 1/2 W.	J569-63
R-24	V-9 Plate	Fixed, 220,000 ohms, 1/2 W.	J569-53
R-25	V-9 Screen Filter	Fixed, 100,000 ohms, 1/2 W.	J569-49
R-26	V-9 Screen Bleeder	Fixed, 100,000 ohms, 1/2 W.	J569-49
R-27	V-9 Grid	Fixed, 47,000 ohms, 1/2 W.	J569-45
R-28	Dimmer	Variable, W.W., 25 ohms	K915-13
R-29	V-7 Filament Dropping	Fixed, 4.3 ohms, 1 W.	K098-34
R-30	V-10 Filament Dropping	Fixed, 4.3 ohms, 1 W.	K098-34
R-31	V-14 Dropping	Fixed, 5,000 ohms, 10 W.	E959-10
R-32	V-7 Load	Fixed, 22,000 ohms, 1/2 W.	J569-41
R-33	V-7 Load	Fixed, 470,000 ohms, 1/2 W.	J569-57
R-34	V-10 Plate	Fixed, 220,000 ohms, 1/2 W.	J569-53
R-35	V-10 Cathode	Fixed, 220,000 ohms, 1/2 W.	J569-53
R-36	Limiter Threshold Control	Variable, 500,000 ohms	J681-2
R-37	Limiter Threshold Filter	Fixed, 220,000 ohms, 1/2 W.	J569-53
R-38	Limiter Plate Filter	Fixed, 820,000 ohms, 1/2 W.	J569-60
R-39	V-10 Plate Load	Fixed, 470,000 ohms, 1/2 W.	J569-57
R-40	Audio Gain Control	Variable, 500,000 ohms	K347-1
R-41	Limiter Output Divider	Fixed, 220,000 ohms, 1/2 W.	J569-53
R-42	V-11 Cathode	Fixed, 2200 ohms, 1/2 W.	J569-29
R-43	V-11 Cathode Divider	Fixed, 150 ohms, 1/2 W.	J569-15
R-44	Degeneration Feedback	Fixed, 6800 ohms, 1/2 W.	J569-35
R-45	V-11 Audio Screen	Fixed, 100,000 ohms, 1/2 W.	J569-49
R-46	V-11 Plate Load	Fixed, 100,000 ohms, 1/2 W.	J569-49

©John F. Rider

Compliments of www.nucow.com

PARTS LIST (CONT'D.)

SYMBOL	FUNCTION	DESCRIPTION	NAT. CO. TYPE
		RESISTORS (CONT'D.)	
R-47	V-11 Plate Filter	Fixed, 47,000 ohms, 1/2 W.	J569-45
R-48	Tone	Variable, 500,000 ohms	K347-1
R-49	V-8B Grid	Fixed, 220,000 ohms, 1/2 W.	J569-53
R-50	V-8B Cathode Bias	Fixed, 4,700 ohms, 1/2 W.	J569-33
R-51	V-8B Cathode Load	Fixed, 47,000 ohms, 1/2 W.	J569-45
R-52	V-8B Plate Load	Fixed, 47,000 ohms, 1/2 W.	J569-45
R-53	V-13 Grid	Fixed, 220,000 ohms, 1/2 W.	J569-53
R-54	V-12 Grid	Fixed, 220,000 ohms, 1/2 W.	J569-53
R-55	V-12 and V-13 Cathode Bias	Fixed, 220 ohms, 2 W.	J572-17
R-56	Output Load	Fixed, 470 ohms, 2 W.	J572-21
R-57	T-1 Ant. Load A Coil Set Only	Fixed, 22 ohms, 1/2 W.	J569-5
		MISCELLANEOUS	
E-1	Antenna Input Terminal	Screw-Type, three terminals	E261-3
E-2	B+ Switch Terminal	Screw-Type, two terminals	E265-19
E-3	Audio Output Terminal	Screw-Type, three terminals	E259-2
F-1	Fuse 3AG	2 Amps. at 250 V.	F135-4
I-1	Dial Lamp	#47	F136-6
I-2	Dial Lamp	#47	F136-6
I-3	"S" Meter Lamp	#47	F136-6
J-1	Phono Jack	Single-Circuit	J993-1
J-2	Phone Jack	Multi-Circuit	F316-1
L-1	Filter Choke	17 Henries	SA:1694
M-1	"S" Meter	0-1 ma.	J984-5
P-1	Select-O-Ject Plug	Octal	SA:6569
P-2	A.C. Jumper Plug	Octal	SA:3731
S-1	T-1 B.S. - G.C. Switch	Two-position	SA:6749
S-2	T-2 B.S. - G.C. Switch	Two-position	SA:6749
S-3	T-3 B.S. - G.C. Switch	Two-position	SA:6749
S-4	T-4 B.S. - G.C. Switch	Two-position	SA:6749
S-5	Selectivity switch	Six-position, double-pole	E195-3
S-6	A.V.C. ON-OFF switch	SPST, toggle	E230-2
S-7	Control switch	Double-wafer, four-position	SA:6564
S-8	Calibrator switch	DPDT, toggle, center position open	F738-1
S-9	A.C. Line switch	Part of R-40	
S-10	T-10 Primary Selector switch	DPDT, toggle	H340-4
S-11	B+ switch	SPST Bat Handle	E230-2
T-1	First R.F. Amplifier transformer		
	A Band	14.0 - 30 Mc.	SA:6654
	B Band	7.0 - 14.4 Mc.	SA:6755
	C Band	3.5 - 7.3 Mc.	SA:6759
	D Band	1.7 - 4.0 Mc.	SA:6635
	E Band	900 - 2050 Kc.	SA:6513
	F Band	480 - 960 Kc.	SA:6660
	G Band	180 - 430 Kc.	SA:6665
	H Band	100 - 200 Kc.	SA:6803
	J Band	50 - 100 Kc.	SA:6808
	AA Band	27 - 30 Mc.	SA:6814
	AB Band	25 - 35 Mc.	SA:6675
	AC Band	21 - 21.5 Mc.	SA:8073

©John F. Rider

Compliments of www.nucow.com

MODEL HRO-50

PARTS LIST (CONT'D.)

SYMBOL	FUNCTION	DESCRIPTION	NAT. CO. TYPE
	MISCELLANEOUS (CONT'D.)		
T-2	Second R.F. Amplifier Transformer		
	A Band	14.0 - 30 Mc.	SA:6751
	B Band	7.0 - 14.4 Mc.	SA:6650
	C Band	3.5 - 7.3 Mc.	SA:6641
	D Band	1.7 - 4.0 Mc.	SA:6637
	E Band	900 - 2050 Kc.	SA:6540
	F Band	480 - 960 Kc.	SA:6662
	G Band	180 - 430 Kc.	SA:6667
	H Band	100 - 200 Kc.	SA:6669
	J Band	50 - 100 Kc.	SA:6809
	AA Band	27 - 30 Mc.	SA:6673
	AB Band	25 - 35 Mc.	SA:6818
	AC Band	21 - 21.5 Mc.	SA:8074
T-3	Mixer Transformer		
	A Band	14.0 -- 30 Mc.	SA:6752
	B Band	7.0 - 14.4 Mc.	SA:6756
	C Band	3.5 - 7.3 Mc.	SA:6642
	D Band	1.7 - 4.0 Mc.	SA:6638
	E Band	900 - 2050 Kc.	SA:6789
	F Band	480 - 960 Kc.	SA:6794
	G Band	180 - 430 Kc.	SA:6800
	H Band	100 - 200 Kc.	SA:6804
	J Band	50 - 100 Kc.	SA:6810
	AA Band	27 - 30 Mc.	SA:6815
	AB Band	25 - 35 Mc.	SA:6676
	AC Band	21 - 21.5 Mc.	SA:8075
T-4	H.F. oscillator transformer		
	A Band	14.0 - 30 Mc.	SA:6656
	B Band	7.0 - 14.4 Mc.	SA:6678
	C Band	3.5 - 7.3 Mc.	SA:6760
	D Band	1.7 - 4.0 Mc.	SA:6776
	E Band	900 - 2050 Kc.	SA:6631
	F Band	480 - 960 Kc.	SA:6795
	G Band	180 - 430 Kc.	SA:6785
	H Band	100 - 200 Kc.	SA:6805
	J Band	50 - 100 Kc.	SA:6811
	AA Band	27 - 30 Mc.	SA:6816
	AB Band	25 - 35 Mc.	SA:6819
	AC Band	21 - 21.5 Mc.	SA:8076
T-5	Crystal Filter	455 Kc.	SA:3654
T-6	2nd. I.F. Amp. transformer	455 Kc.	SA:2492
T-7	Detector Input transformer	455 Kc.	SA:41G
T-8	C.W. Osc. transformer	455 Kc.	SA:3361
T-9	Audio Output transformer	Pri. 10,000 ohms/Sec. 8/600 ohms, 10 watts	P187-1
T-10	Power transformer	115/230 volt primary	P188-1
V-1	First R.F. Amplifier	6BA6	
V-2	Second R.F. Amplifier	6BA6	
V-3	Mixer	6BE6	
V-4	H.F. Oscillator	6C4	
V-5	First I.F. Amplifier	6K7	
V-6	Second I.F. Amplifier	6K7	

©John F. Rider

Compliments of www.nucow.com

V-7	Second Detector and A.V.C.	6H6	
V-8A	"S" Meter Amplifier	1/2 6SN7GT	
V-8B	Phase Inverter	1/2 6SN7GT	
V-9	C.W. Oscillator	6J7	
V-10	Noise Limiter	6H6	
V-11	Audio Amplifier	6SJ7	
V-12	Audio Output	6V6GT	
V-13	Audio Output	6V6GT	
V-14	Voltage Regulator	OB2	
V-15	Rectifier	5V4G	
X-1	Accessory Connector Socket	Octal	J665-2
X-2	Crystal Calibrator Socket	Octal	J665-2
X-3	Select-O-Ject Socket	Octal	J665-2
Y-1	Crystal Resonator	Quartz, 455 Kc.	E979-1

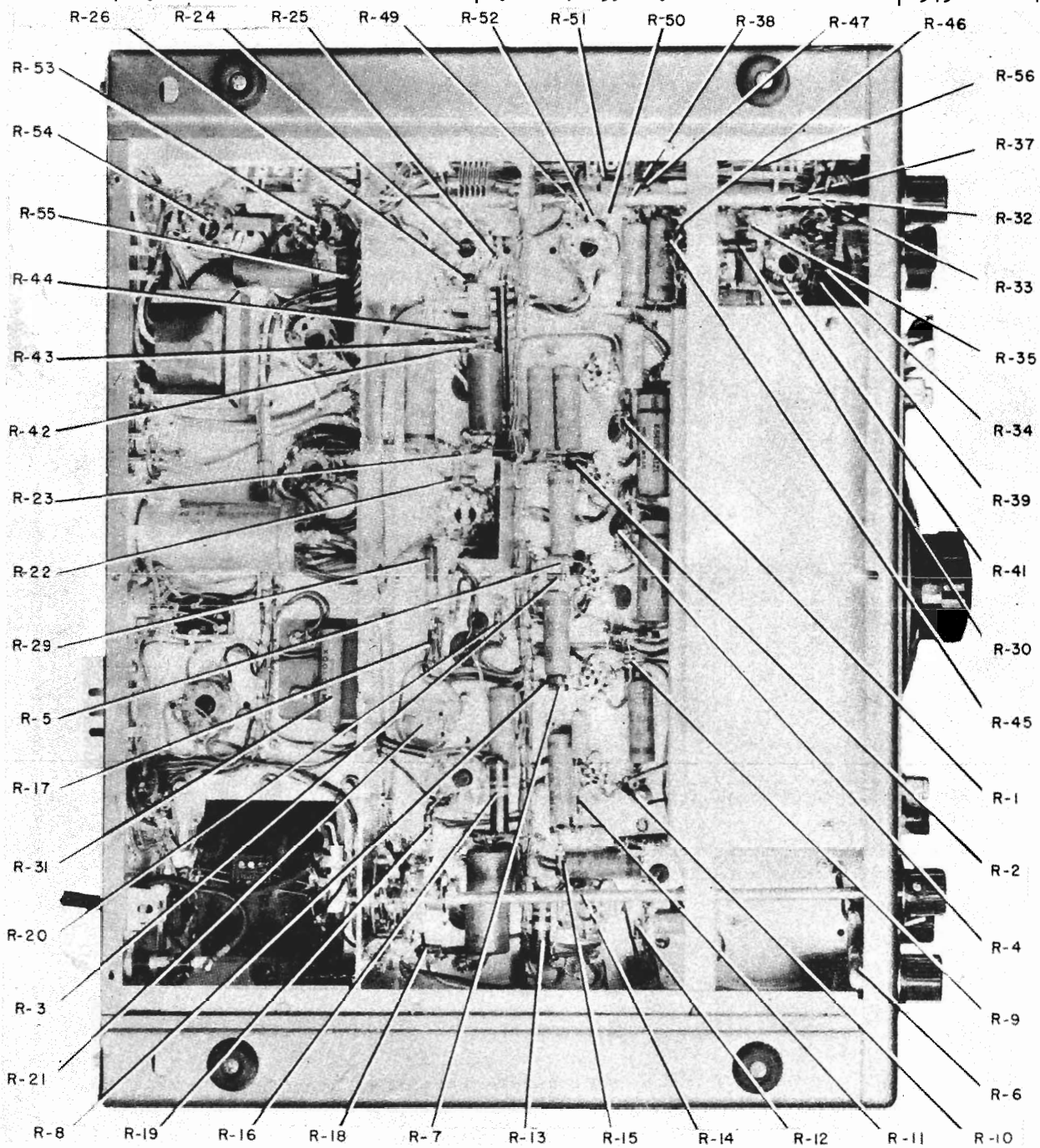

Figure No. 10A. Resistor Locations, Bottom View of Receiver

©John F. Rider

Compliments of www.nucow.com

MODEL HRO-50

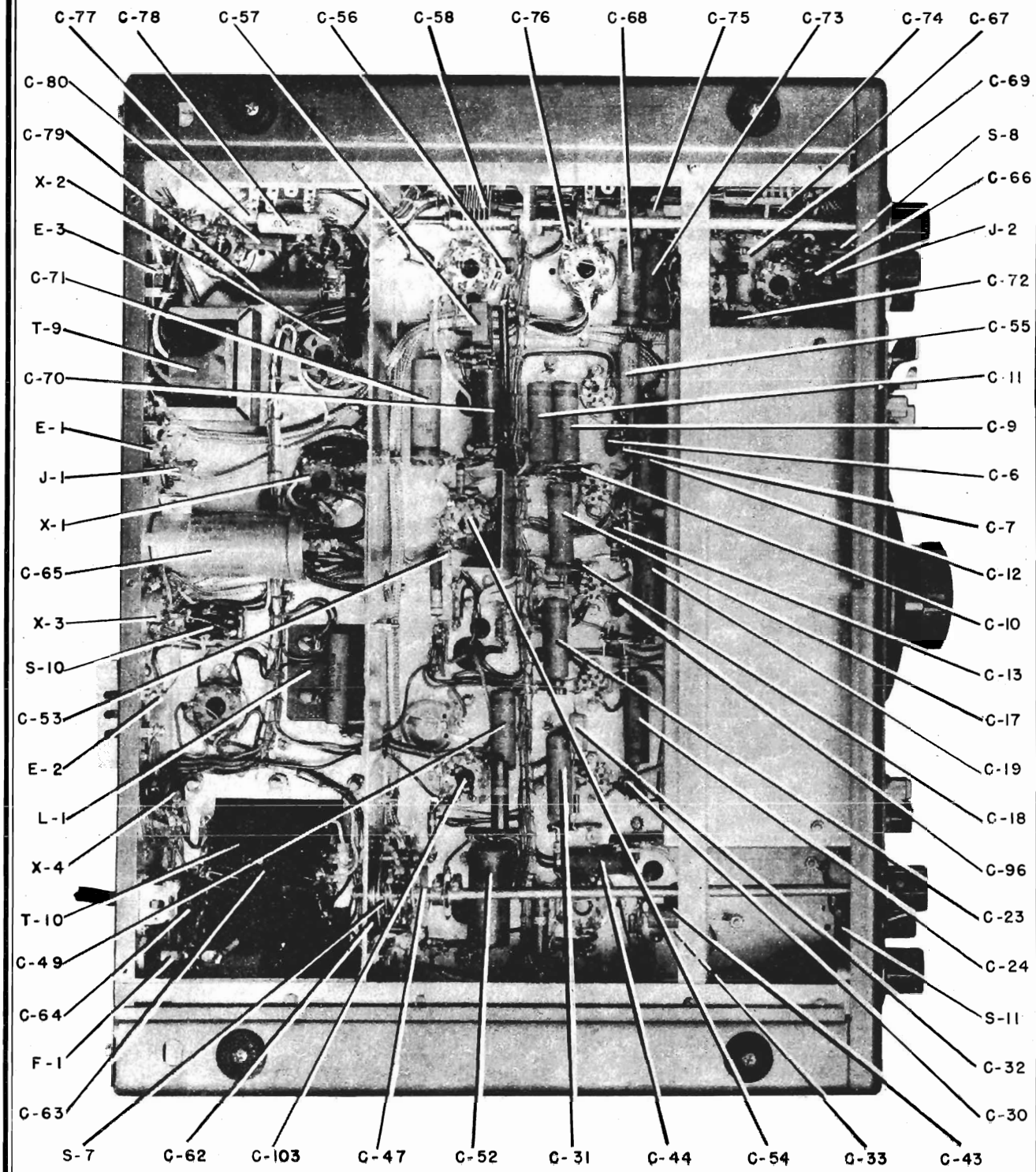

Figure No. 10B. Capacitor and Miscellaneous Component Locations, Bottom View of Receiver

©John F. Rider

Compliments of www.nucow.com

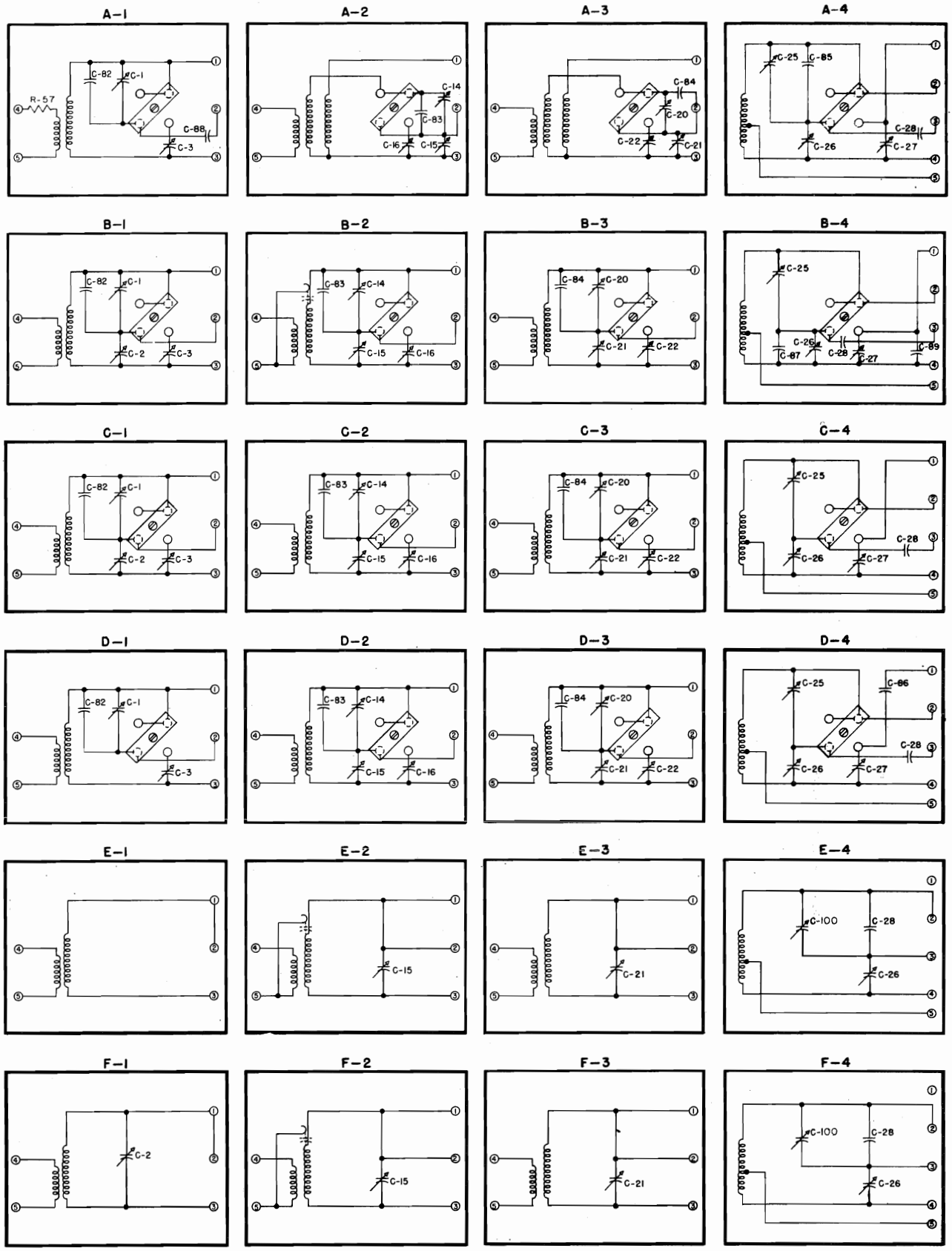

Figure No. 11. Schematic Diagrams, Coil Sets A, B, C, D, E and F

©John F. Rider

Compliments of www.nucow.com

MODEL HRO-50

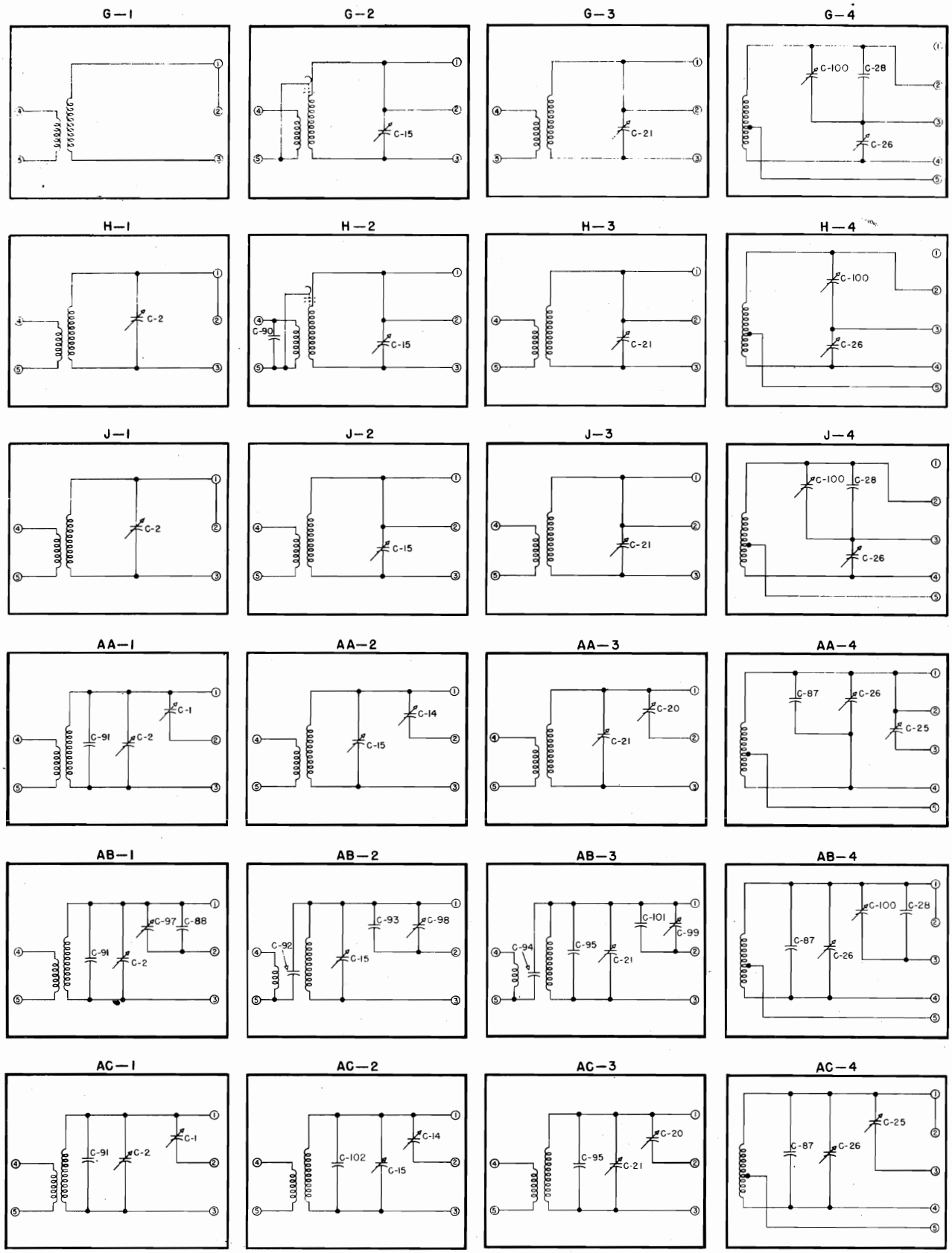

Figure No. 12. Schematic Diagrams, Coil Sets AA, AB, AC, G, H and J

©John F. Rider

Compliments of www.nucow.com

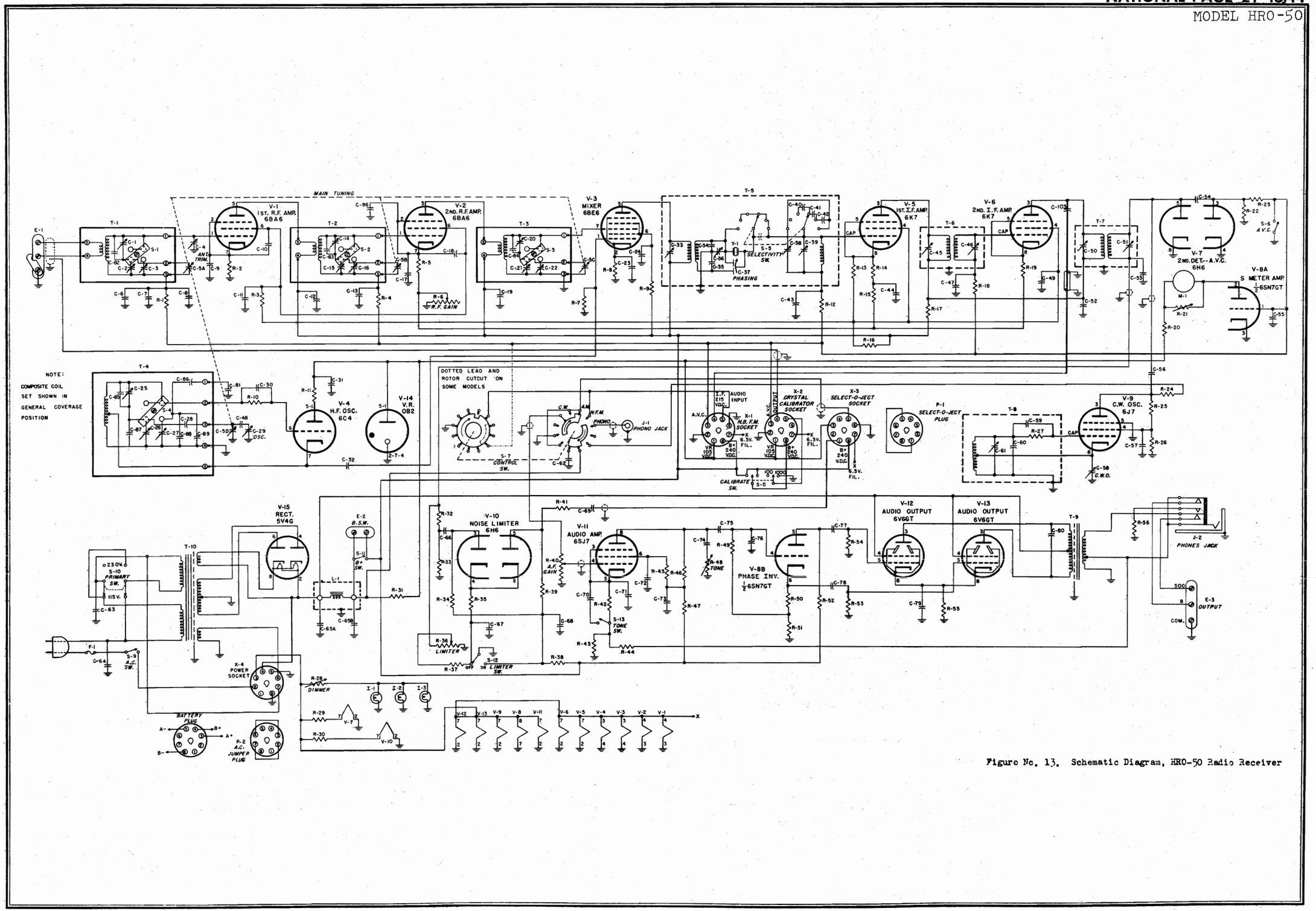

Figure No. 13. Schematic Diagram, HRO-50 Radio Receiver

© John F. Rider

Compliments of www.nucow.com

GENERAL

The type XCU Crystal Calibrator Unit is designed expressly for use within the HRO-50 Receiver. It utilizes an electron-coupled oscillator circuit controlled by a dual-dimension crystal (Bliley type SMC-100). This type of crystal provides two crystal-controlled marker frequencies of 100 kilocycles and 1 megacycle. When plugged into the Crystal Calibrator Socket, X-2, the XCU output is loosely coupled to the first R.F. amplifier input circuit. Selection of either the 100 kilocycle or 1000 kilocycle crystal-controlled signal is made possible by the front-panel mounted Calibrate switch on the Receiver.

INSTALLATION

The XCU calibrator is installed in the HRO-50 Receiver by plugging the unit into the Crystal Calibrator Socket, X-2, on top of the chassis. A slotted-head screw mounted through the top of the unit is provided to bolt the unit to the chassis.

A trimmer capacitor, C-1, is connected across the crystal to permit adjustment of the frequency of the 100 kilocycle output marker when the unit is operated at locations where the temperature is vastly removed from that of normal room temperature. This capacitor should never require adjustment unless such abnormal temperatures are experienced. To make the adjustment proceed as follows:

(1) Plug in a coil set suitable for the reception of WWV on one of the various frequencies utilized by this standard frequency station.
(2) Adjust the Receiver for normal C.W. operation as explained in Section 3-3.
(3) Set the front-panel mounted Calibrate switch at the 100 kilocycle position.
(4) Tune in the signal from WWV.
(5) Adjust the trimmer capacitor, C-1, located at the top of the calibrator unit so that the 100 kilocycle marker signal harmonic is zero beat with the signal received from WWV.

OPERATION

The XCU Crystal Calibrator provides a means of checking the accuracy of the frequency calibration of the Receiver. The front-panel mounted Calibrate switch marked 100-Off-1000 connects B-plus to the Calibrator for instantaneous service. At the same time this switch selects either the 100 or 1000 kilocycle marker signal. To check calibration accuracy tune in the desired marker signal with the Control switch set at C.W. and zero beat the Receiver with the harmonic marker. If the micrometer dial and the slide-rule dial do not read accurately correction should be made by adjusting the front-panel mounted Osc. trimmer control. Only a slight adjustment of the Osc. trimmer control should be necessary. If calibration is way off the plug-in coil set probably requires realignment and reference should be made to Section 4.

PARTS LIST

SYMBOL	FUNCTION	DESCRIPTION	NAT. CO. TYPE
C-1	100 Kc. Tuning	Ceramic, variable, 6 - 20 mmf.	E311-2
C-2	B+ Filter	Paper, .1 mfd. +30%-10% 400 vdcw	D827-11
C-3	Cathode by-pass	Paper, .1 mfd. +30%-10% 400 vdcw	D827-11
C-4	Output Coupling	Ceramic, 10 mmf. ±.5 mmf. 500 vdcw	H872-1
L-1	100 Kc. inductor	5 mh. type R-100	SA:4373
L-2	1000 Kc. inductor	.5 mh. type R-50	SA:2514
P-1	Plug	Octal	K783-1
R-1	Grid	Fixed, 4.7 megohms, 1/2 W.	J569-69

©John F. Rider

R-2	Cathode	Fixed, 150 ohms, 1/2 W.	J569-15
R-3	Screen dropping	Fixed, 2200 ohms, 1 W.	J571-41
R-4	Plate	Fixed, 470,000 ohms, 1 W.	J571-57
V-1	Oscillator tube	6AK6	
Y-1	Crystal Resonator	Quartz, 100 - 1000 Kc.	P206-1

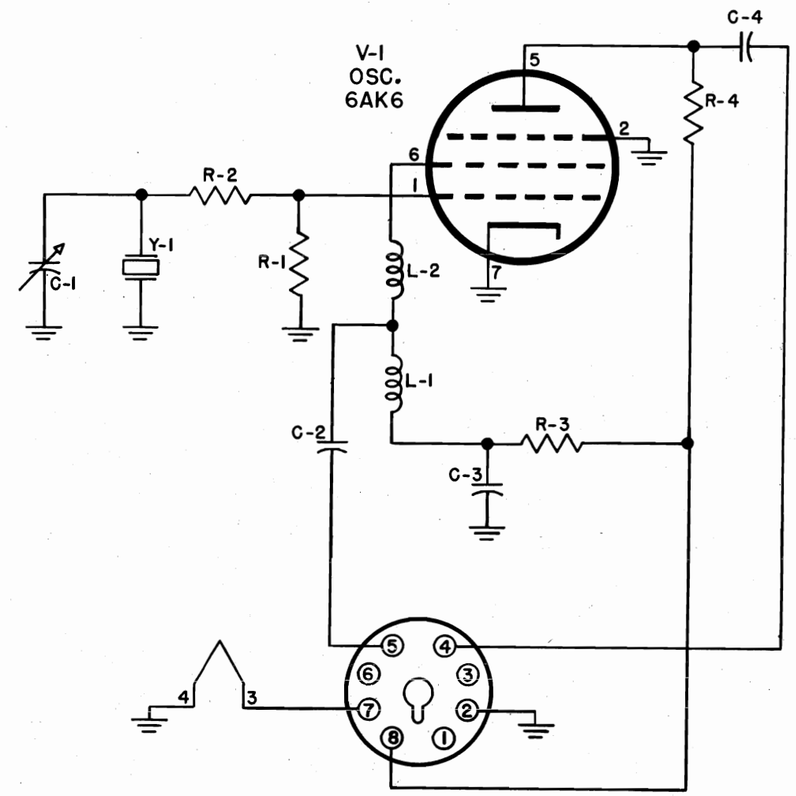

Figure No. 14. Schematic Diagram, XCU Calibrator

INSTRUCTIONS
for the
NATIONAL NFM-50
NARROW-BAND F.M. ADAPTOR

INSTALLATION

The NFM-50 is installed in the HRO-50 Receiver by plugging the adaptor unit into the N.B.F.M. Socket X-1 on the top of the chassis. A mounting bracket is furnished to hold the adaptor unit securely in position.

The adaptor unit is aligned at National Company laboratories and realignment is not necessary. It is necessary to realign the primary trimmer capacitor C-50 in the second detector transformer, T-7, on the HRO-50. See Figure No. 6 in this Instruction Book for the location of this adjustment. Realignment of this capacitor is effected as follows:

©John F. Rider

Compliments of www.nucow.com

1. Install the NFM-50.
2. Adjust the receiver controls for normal A.M. operation.
3. Disconnect the antenna.
4. Trim the capacitor, C-50, for maximum receiver background noise using an insulated alignment tool.

ALIGNMENT

The NFM-50 is carefully aligned before shipment and no realignment is required unless the adaptor is accidently misaligned. The necessity of realignment can be determined by the A.M. rejection capabilities of the adaptor unit. Proper alignment will be indicated when the maximum A.M. rejection occurs at the center of the A.M. carrier. Maximum S-meter reading will indicate the center of the carrier.

The equipment required for alignment is a high-impedance vacuum tube voltmeter and an A.M. signal generator. The signal generator used should have an output resonably free of any frequency modulation. The use of a broadcast station as a signal source, in place of a signal generator, would provide a test signal meeting the above requirement. In any case, the signal strength of the test signal should be of the order to provide an S-meter reading of from 2 to 5 S-units when the HRO-50 is correctly tuned to the test signal.

The preliminary alignment procedure is as follows:

1. Connect the high-impedance voltmeter between the test point jack, J-1, and chassis. The polarity of the voltage will depend on the alignment of the adaptor, connect the voltmeter to obtain an up-scale reading.
2. Connect a signal source to the antenna terminals, A and A, at the rear of the HRO-50. If a signal generator is used make the connection through a 300 ohm dummy load and select a frequency in the standard broadcast band.
3. Set the Control switch at N.F.M.
4. Set the Selectivity switch at Off.
5. Set the Limiter control at Off.
6. Plug in the E coil set, 900 to 2,050 Kc. If this coil set is not available use the D coil set, 1.7 to 4.0 Mc.
7. Set the B plus switch at On.
8. Set the A.V.C.-Off switch at A.V.C.
9. Turn the R.F. Gain control to 10.
10. Adjust the A.F. Gain control for the desired volume.
11. Tune the test signal by adjustment of the Main Tuning knob. The correct tuning point is the setting that produces maximum S-meter reading.

Alignment is effected as follows:

1. Detune both primary, L-1, and secondary L-2, I.F. trimmers by rotating the screw adjustments until they are withdrawn from the shield can as far as possible. The adjustment with the dot of red paint opposite it is the primary trimmer L-1.
2. Tune the primary trimmer, L-1, for maximum reading on the voltmeter. If two peaks in output are observed, the correct peak will be the first one encountered when rotating the screw adjustment into the shield can.
3. Tune the secondary trimmer, L-2, for a zero reading on the voltmeter. It will be noted that there is a crossover in the polarity of the test voltage at this point.
4. Adjust the capacitor, C-9, for a null in the audio output. This capacitor is accessible after removal of the button plug on the side of the adaptor unit.

©John F. Rider

Compliments of www.nucow.com

MODEL HRO-50

5. Adjustment of capacitor, C-9, may affect the zero voltage reading obtained by adjustment of the secondary trimmer, L-2. Retrim L-2 and C-9, as necessary, until both a zero voltage reading on the voltmeter and a null in the audio output are obtained.

PARTS LIST

SYMBOL NO.	FUNCTION	DESCRIPTION	NAT. CO. TYPE
C-1	I.F. Amp. Coupling	Ceramic, 10 Mmf, 500 vdcw	D825D-402
C-2	Input Divider	Ceramic, 38.5 Mmf, 500 vdcw	D825D-414
C-3	I.F. Amp. Cathode Bypass	Mica, 0.01 Mfd, 300 vdcw	J666-56
C-4	I.F. Amp. Screen Bypass	Mica, 0.001 Mfd, 300 vdcw	J665-71
C-5	T-1 Primary Tuning	Mica, 100 Mmf, 500 vdcw	H500-7
C-6	T-1 Secondary Tuning	Mica, 180 Mmf, 500 vdcw	H500-3
C-7	T-1 Secondary Tuning	Mica, 180 Mmf, 500 vdcw	H500-3
C-8	T-1 Secondary Tuning	Ceramic, 38.5 Mmf, 500 vdcw	D825D-414
C-9	T-1 Sec. Balance Adj.	Ceramic, Var., 7-35 Mmf.	E311-4
C-10	Disc. Cathode Filter	Elect. 1 Mfd, 450 vdcw	E338-10
C-11	B Supply Bypass	Mica, 0.01 Mfd, 300 vdcw	J666-56
C-12	R.F. Filter	Mica, 470 Mmf, 500 vdcw	J665-56
C-13	Audio Coupling	Mica, 0.01 Mfd, 300 vdcw	J666-56
R-1	I.F. Amp. Grid Leak	Fixed, 1 Megohm, 1/2 W.	K379-61
R-2	I.F. Amp. Cathode Bias	Fixed, 1,000 Ohms, 1/2 W.	K379-25
R-3	I.F. Amp. Screen Dropping	Fixed, 47,000 Ohms, 1/2 W.	K379-45
R-4	R.F. Filter	Fixed, 47,000 Ohms, 1/2 W.	K379-45
R-5	Diode Load	Fixed, 15,000 Ohms, 1/2 W.	K379-39
R-6	Diode Load	Fixed, 15,000 Ohms, 1/2 W.	K379-39
R-7	Decoupling	Fixed, 4,700 Ohms, 1/2 W.	J569-33
J-1	Test Point	Tip Jack, Bakelite	K421-1
L-1	T-1 Primary Inductor	Adjustable Iron-Core	SA:4892
L-2	T-1 Secondary Inductor	Adjustable Iron-Core	SA:4891
P-1	Adaptor Unit Plug	8 Prong Octal	K783-1
T-1	Discriminator Transformer	Ratio Type 455 Kc.	SA:4890
V-1	I.F. Amplifier	6SK7	
V-2	Discriminator	6H6	

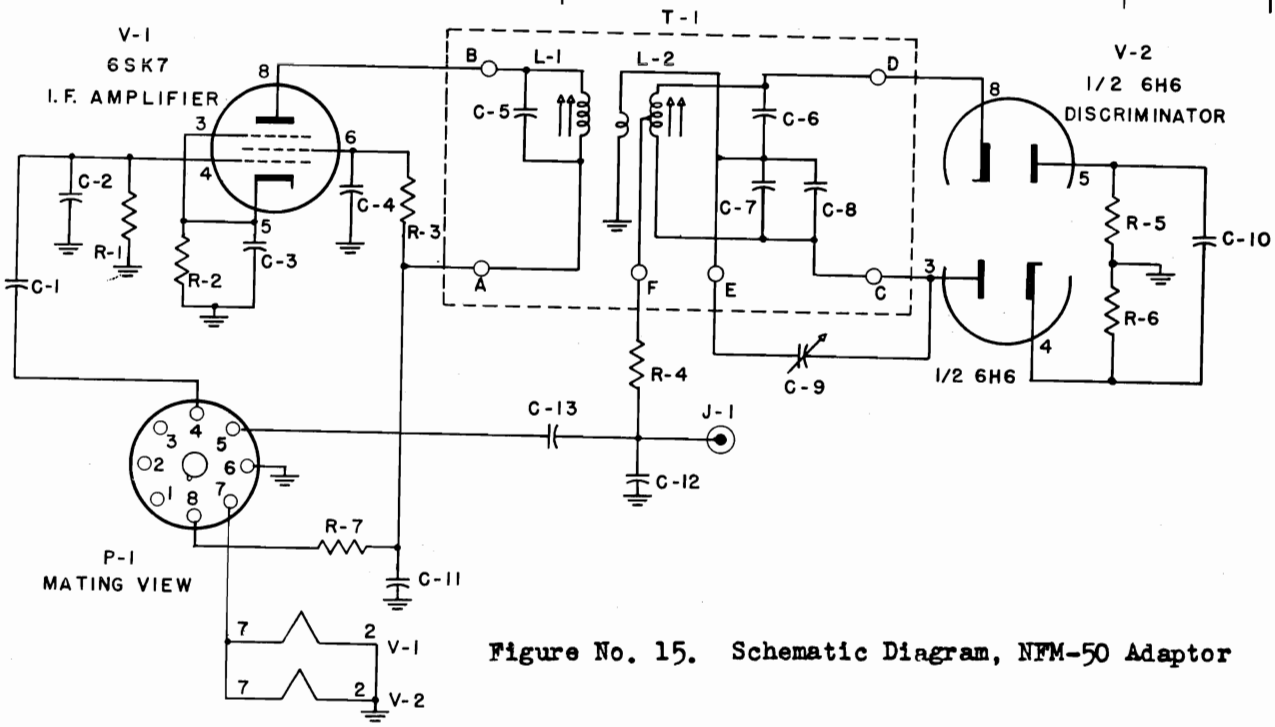

Figure No. 15. Schematic Diagram, NFM-50 Adaptor

©John F. Rider

Compliments of www.nucow.com

INSTRUCTIONS FOR THE NATIONAL TYPE 650S VIBRATOR POWER SUPPLY

GENERAL

The National Type 650S Table Model Vibrator Power Unit has been designed to furnish complete operating voltages for the HRO-50 Receiver. The unit operates from a 6-volt D.C. supply and provides approximately 150 volts D.C. at 70 milliamperes in normal operation. Output voltages for both A and B supply are available at a four prong socket for convenient connection to the Receiver.

The 650S consists of a vibrator unit utilizing an OZ4A type rectifier tube and a vibrator in a circuit employing efficient R.F. filtering of vibrator hash. Further filtering of the low frequency or audio hum component in the output is accomplished by using the regular filter system in the Receiver.

INSTALLATION

The 650S unit is supplied with a battery connecting cable as well as an interconnecting cable to facilitate connection to the Receiver.

Battery clips are provided on the battery connecting cable, W-1, for convenient connection to a 6-volt storage battery or similar source of power. The interconnecting cable, W-2, is terminated at one end in a four-prong plug to mate with the socket, X-1, of the 650S. The other end utilizes an octal plug to mate with the power socket, X-1, at the rear of the HRO-50 Receiver. The Receiver A.C. jumper plug, P-1, used for A.C. operation must be removed from the power socket. Figure Number 16 shows the Schematic Wiring Diagram.

The 650S Vibrapack Unit has been completely tested and adjusted at the factory to provide efficient and economical service when used with the HRO-50 Receiver. An adjustment control switch has been furnished for increasing the B-plus output. This is a screw driver control available through an entry hole provided at the rear of the 650S. The control switch has four steps from approximately 150 volts of filtered D.C. at 70 milliamperes in the extreme counterclockwise position (step 1) to approximately 210 volts at 90 milliamperes in the fully clockwise position (step 4). It is recommended that the Receiver be operated at the lower B voltage of step 1. The total battery drain is approximately 10.5 amperes when furnishing power to the Receiver if the NFM-50, XCU and SOJ-3 units are used. If the Receiver is used without these accessories the total drain is approximately 9 amperes. The V.R. tube does not light under these conditions but the Receiver will operate normally and operation from a storage battery becomes practical. In step 4 the V.R. tube will light and full Receiver output will be obtained but the drain on the storage battery will be approximately 15 amperes when all accessories are utilized. Without these accessories the total Receiver drain from the battery will be approximately 13.3 amperes.

The two intermediate control switch steps 2 and 3 should not be used as the voltage obtained is approximately the value required to fire the V.R. tube in the receiver. Under this condition the V.R. tube may fire on and off sporadically resulting in erratic operation of the receiver.

©John F. Rider

Compliments of www.nucow.com

MODEL HRO-50

PARTS LIST

SYMBOL	FUNCTION	DESCRIPTION	NAT. CO. TYPE
C-1	Filter Capacitor	Elec. 500 mfd. 15 vdcw	E338-7
E-1	Vibrapack Unit	6 V.D.C. Mallory Type VP554	
F-1	Fuse	3 AG 20 Ampere 25 volt	
L-1	6-volt Line Filter	16 microhenries, iron core	SA:869
S-1	6-volt Line Switch	Toggle S.P.S.T.	E230-2
V-1	Rectifier Tube	Type OZ4A	
W-1	6-volt Line Connector	Two Contact	SA:1999
W-2	Interconnecting Cable	One end terminated in four prong plug; other in an octal plug	
Y-1	Vibrator	6 V.D.C. Mallory Type 825C	
X-1	Output Socket	Four Prong Female	

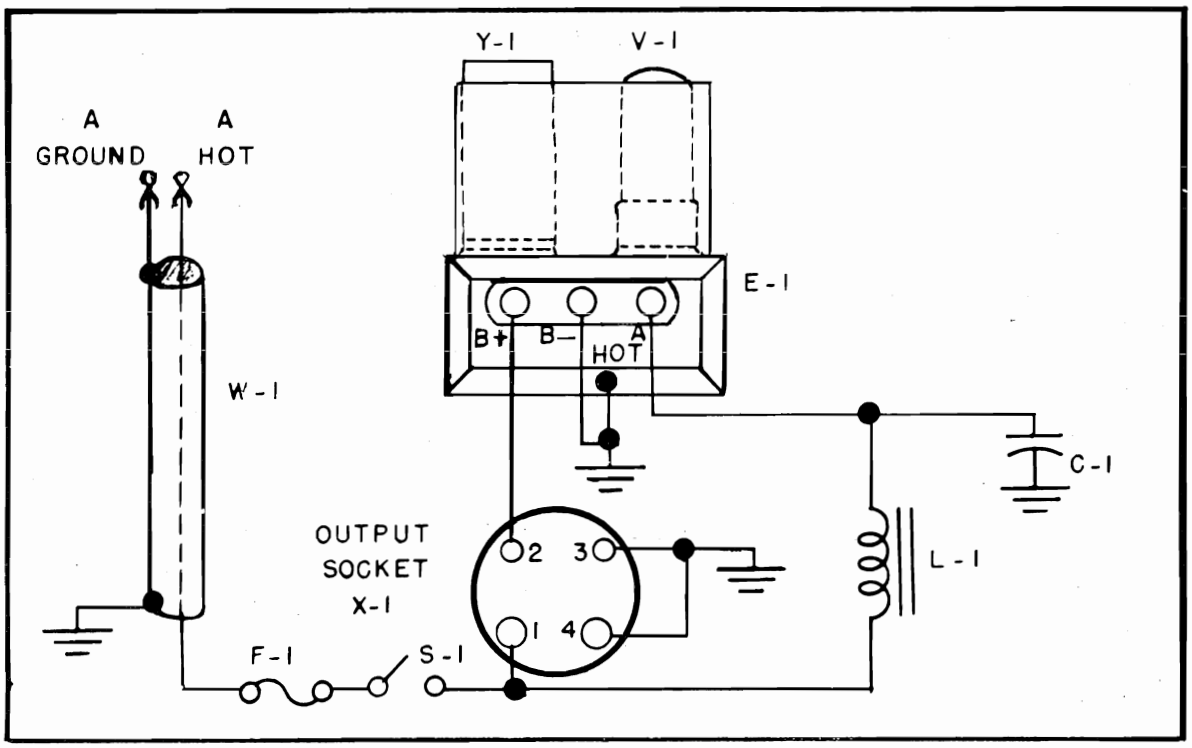

Figure No. 16. Schematic Diagram, 650S Vibrator Power Supply

©John F. Rider

Compliments of www.nucow.com

SPECIFICATIONS

OVERALL DIMENSIONS:

Height	35"
Width	29"
Depth	18"
Shipping Weight	100 Lbs.

ELECTRICAL RATING:

Line Voltage	110-120 volts, 50-60 C.P.S.
Power Consumption	57 watts @ 115 VAC

TUNING FREQUENCY RANGE:

540 to 1620 KC

INTERMEDIATE FREQUENCY:

455 KC

ELECTRICAL POWER OUTPUT:

Maximum	3.2 watts
Undistorted	1.7 watts

LOUDSPEAKER:

Type	Permanent Magnet
Outside Cone Diameter	10"
Voice Coil Impedance	3.2 ohms @ 400 C.P.S.
Magnet Rating	3.16 Ozs. Alnico V

TUBES:

Tube	Function
6SK7	R-F Amplifier
6SA7	Frequency Converter
6SK7	I-F Amplifier
6SQ7	2nd Detector—1st Audio Amplifier
6K6-GT	Power Amplifier
5Y3-GT	Rectifier

SPECIAL SERVICING INFORMATION

D. C. RESISTANCE MEASUREMENTS:

Due to a variation of winding methods, the D. C. resistance on all coils is subject to a 20% tolerance.

1st I-F Coil:

Primary	17 ohms
Secondary	14.5 ohms

2nd I-F Coil:

Primary	17 ohms
Secondary	14.5 ohms*

Oscillator Coil:

Primary	1 ohms
Secondary	6 ohms

R-F Coil:

Primary	58 ohms
Secondary	4.2 ohms

*Because of the 47K resistor in series with the secondary of the 2nd I-F, the reading shown can only be obtained by removing the coil from the can.

STAGE GAIN MEASUREMENTS:

Measurements taken with Volume and Tone Controls maximum . . . Selector Switch in Radio position . . . AVC shorted to ground.

Standard Output	50 milliwatts
Dummy Antenna	200 Mmf.

Antenna to R-F Grid—6X at 100 KC
R-F Grid to Converter Grid—7X at 1000 KC
Converter Grid to 1st I-F Grid—46X at 455 KC
1st I-F Grid to 2nd Detector—62X at 455 KC
Overall Audio Gain—320X at 500 milliwatts, 400 cycles.

OSCILLATOR CATHODE VOLTAGES:

Measured at 117 volts AC line with an AC vacuum tube voltmeter input loading above 10 megohms.

1500 KC — 2.25 VAC
1000 KC — 2.15 VAC
800 KC — 2.3 VAC
600 KC — 2.5 VAC

©John F. Rider

Compliments of www.nucow.com

MODEL 601

SOCKET VOLTAGES

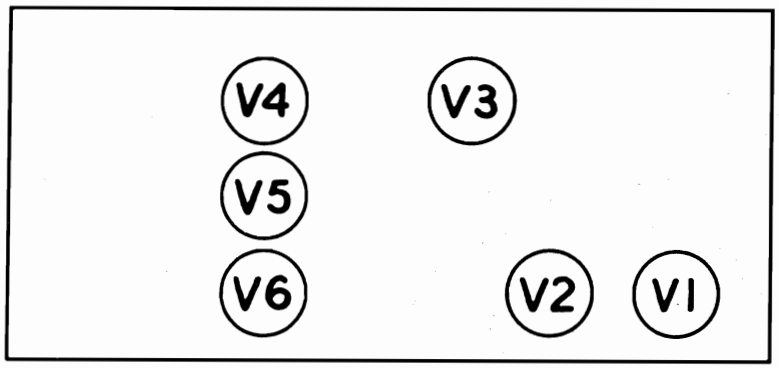

Figure 2
Tube Location Chart

The socket voltages shown were measured under the following conditions:

1. D.C. voltages measured from socket contacts to chassis with a D.C. vacuum tube voltmeter.
2. A.C. voltages measured with a 1,000 ohms per volt A.C. meter.
3. Volume and Tone Controls maximum.
4. Selector Switch in Radio position; no signal.
5. All voltages are positive D.C. unless otherwise noted.
6. Voltage readings subject to a 10% variation.

V-1—6SK7—R-F Amplifier:

Pin	Element	Voltage
1	Shield	0
2	Heater	0
3	Grid 3	0
4	Grid 1	-.7
5	Cathode	.5
6	Grid 2	74
7	Heater	6.0 VAC
8	Plate	190

V-2—6SA7—Frequency Converter:

Pin	Element	Voltage
1	Grid 5	0
2	Heater	0
3	Plate	195
4	Grids 2 & 4	74
5	Grid 1	-6.4
6	Cathode	0
7	Heater	6.0 VAC
8	Grid 3	-.8

V-3—6SK7—I-F Amplifier:

Pin	Element	Voltage
1	Shield	0
2	Heater	6.0 VAC
3	Grid 3	0
4	Grid 1	-.7
5	Cathode	2.2
6	Grid 2	74
7	Heater	0
8	Plate	195

V-4—6SQ7—2nd Detector, 1st Audio Amplifier:

Pin	Element	Voltage
1	No Connection	0
2	Grid	-.5
3	Cathode	0
4	Diode Plate	-1
5	Diode Plate	-1
6	Plate Triode	105
7	Heater	0
8	Heater	6.0 VAC

V-5—6K6-GT—Power Amplifier:

Pin	Element	Voltage
1	No Connection	0
2	Heater	0
3	Plate	240
4	Grid 2	200
5	Grid 1	-13
6	No Connection	0
7	Heater	6.0 VAC
8	Cathode	0

V-6—5Y3-GT—Rectifier:

Pin	Element	Voltage
1	No Connection	0
2	Heater	260 (5.0 VAC to pin 8)
3	No Connection	0
4	Plate	265 VAC to Pow. Trans. Center Tap
5	No Connection	0
6	Plate	265 VAC to Pow. Trans. Center Tap
7	No Connection	0
8	Heater	260 (5.0 VAC to pin 2)

©John F. Rider

Compliments of www.nucow.com

ALIGNMENT PROCEDURE

Alignment procedure consists of the steps outlined in the Alignment Chart. Make certain each step is done with a minimum input signal.

Connect output meter to speaker voice coil.

ALIGNMENT CHART

STEP	CONNECT TEST OSC. TO	TEST OSC. SETTING	POINTER SETTING	ADJUST FOR MAX OUTPUT
1	Mixer grid & Ground	455 KC	540 KC	Trimmers A, B, C & D
2	R-F Grid & Ground	1500 KC	1500 KC	Trimmer G
3	R-F Grid & Ground	600 KC	600 KC	Padder E
4	R-F Grid & Ground	1500 KC	1500 KC	Trimmers F & H
5	Repeat Steps 2, 3 & 4			
6	Check Stationizing. Slide pointer on string if stations are uniformily off in one direction.			

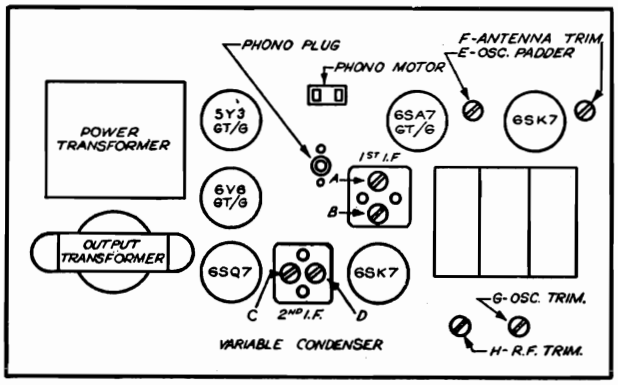

Figure 3
Trimmer Location

TABLE OF REPLACEABLE PARTS

REF. SYMBOL	DESCRIPTION	PB PART NO.
	CAPACITOR, TUBULAR,	
C-15, 17	.005 Mfd. 600 volt	23004
C-16	.02 Mfd. 600 volt	23007
C-5, 12	.05 Mfd. 600 volt	23010
C-8	.05 Mfd. 200 volt	23017
	CAPACITOR, TRIMMER,	
C-6, 11	Dual—3-30 Mmf.	23400
C-10	300-800 Mmf.	23402
C-2	3-30 Mmf.	23406
	CAPACITOR, VARIABLE,	
C-1A, B, C	3-gang	23521
	CAPACITOR, ELECTROLYTIC,	
C-18	40 Mfd. 350 volt	24063
C-19	20 Mfd. 350 volt	24064
	CONTROLS,	
R-9	Volume, 1 megohm—tapped	25010C
R-11	Tone, 5 megohms	25506C
	COILS,	
L-2	1st I-F—455 KC	29004E
L-3	2nd I-F—455 KC	29007
L-1	R-F	29102F
L-4	Oscillator	29205C
	Loop	29335A
	RESISTORS, ½ WATT, 10%,	
R-2, 8	39 ohms	73008
R-7	390 ohms	73020
R-14	1,500 ohms	73027
R-4	22,000 ohms	73041

REF. SYMBOL	DESCRIPTION	PB PART NO.
	RESISTORS, ½ WATT, 20%,	
R-12	220,000 ohms	73153
R-13	470,000 ohms	73157
R-6	1 megohm	73161
R-1, 3	2.2 megohms	73165
R-10	4.7 megohms	73169
	RESISTORS, 1 WATT, 10%,	
R-16	270 ohms	73218
	RESISTORS, 2 WATT, 10%,	
R-5	10,000 ohms	73437
	RESISTORS, WIRE WOUND,	
R-15	2,000 ohms, 5 Watt, 10%	73631
	TRANSFORMERS,	
T-2	Power, 500 volt center tap @ .070 amperes	89010D
T-1	Output, 8,500 to 3.2 ohms	89427
	MISC. PARTS	
	Cabinet (Specify Finish)	21105B
	Cord, AC	32003C
	Dial	38120A
	Knobs	52037
	Lamp, dial—T-44	54001
	Record Changer V-M 950	58037
	Plug—Antenna & Speaker	66004
	Dial Pointer	67031
	Socket, Tube, Std. Octal	79002
	Socket, Speaker	79005
	Socket, AC	79007
	Socket, Dial Light	83705
	Speaker, 10" PM	86988
	Switch—Ph-Rad	79010

©John F. Rider

Compliments of www.nucow.com

MODEL 601

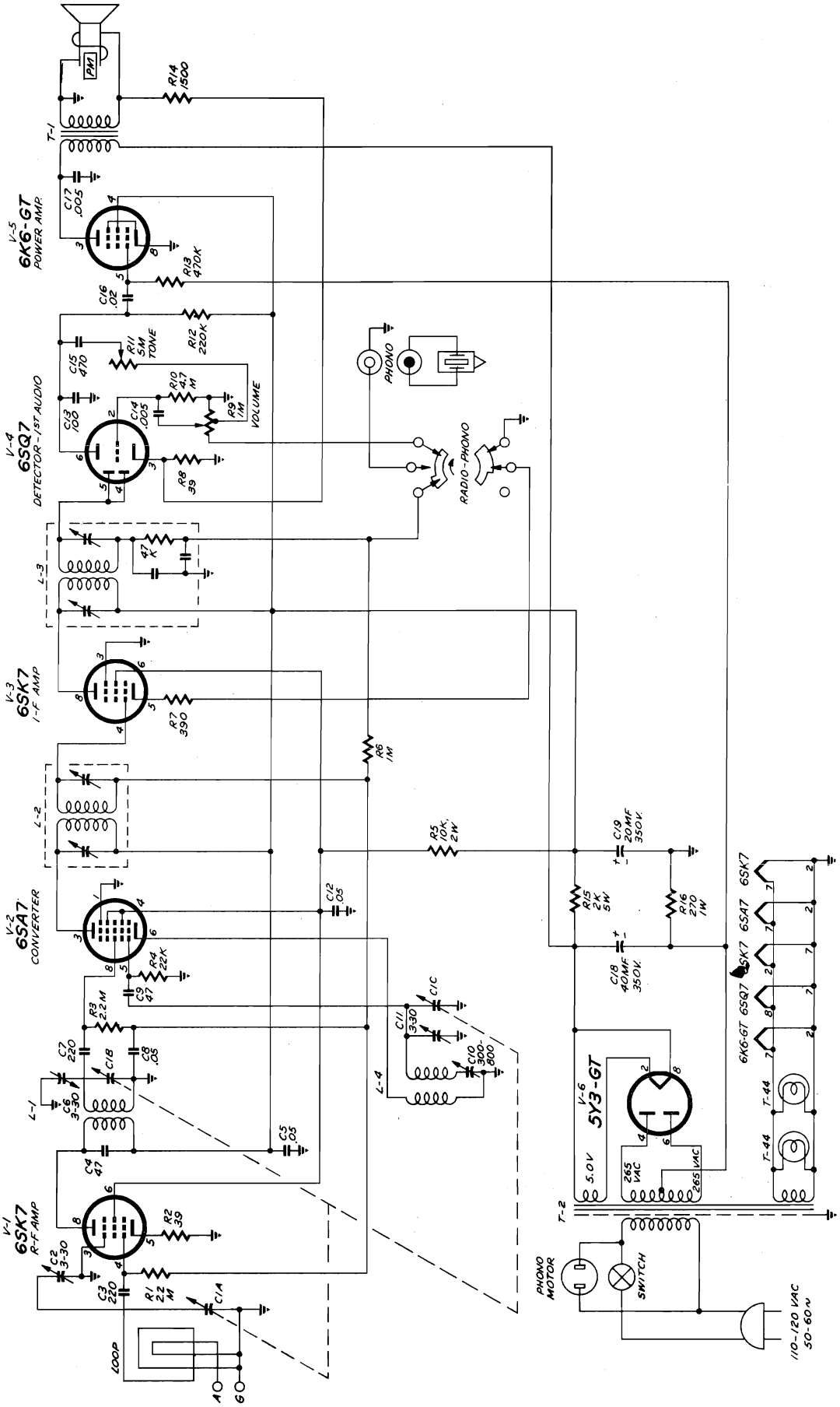

Figure 4
Schematic Diagram

©John F. Rider

Compliments of www.nucow.com

SPECIFICATIONS

CABINET	
Model 50-920	Molded plastic, mahogany and gray, wide-angle dial
Model 50-921	Molded plastic, ivory, wide-angle dial
Model 50-922	Molded plastic, maroon, wide-angle dial
CIRCUIT	6-tube superheterodyne
FREQUENCY RANGE	540—1620 kc.
AUDIO OUTPUT	1.2 watts
OPERATING VOLTAGE	105—120 volts, a.c. or d.c.
POWER CONSUMPTION	30 watts
AERIAL	Built-in, high-impedance loop; provision for connection of external aerial
INTERMEDIATE FREQUENCY	455 kc.
PHILCO TUBES (6)	7B7 r-f ampl., 7A8 converter, 7B7 i-f ampl., 14B6 det.—1st audio—a.v.c., 50L6GT output, 35Z5GT rectifier

ALIGNMENT PROCEDURE

DIAL POINTER: Turn tuning condenser to full-mesh position. Adjust pointer so that center of pointer carriage coincides with first scribe line from the left.

OUTPUT METER: Connect across speaker voice coil.

SIGNAL GENERATOR: Connect as indicated in chart Use modulated output.

OUTPUT LEVEL: During alignment, attenuate signal-generator output to maintain an output-meter indication of 1.25 volts.

VOLUME CONTROL: Set to maximum.

NOTE: Run 1 sets have an i.f. of 265 kc. Otherwise alignment is as indicated.

CRITICAL DRESS: The green lead from the osc. section of C1 to C5 must be dressed away from the chassis, with all excess under the chassis.

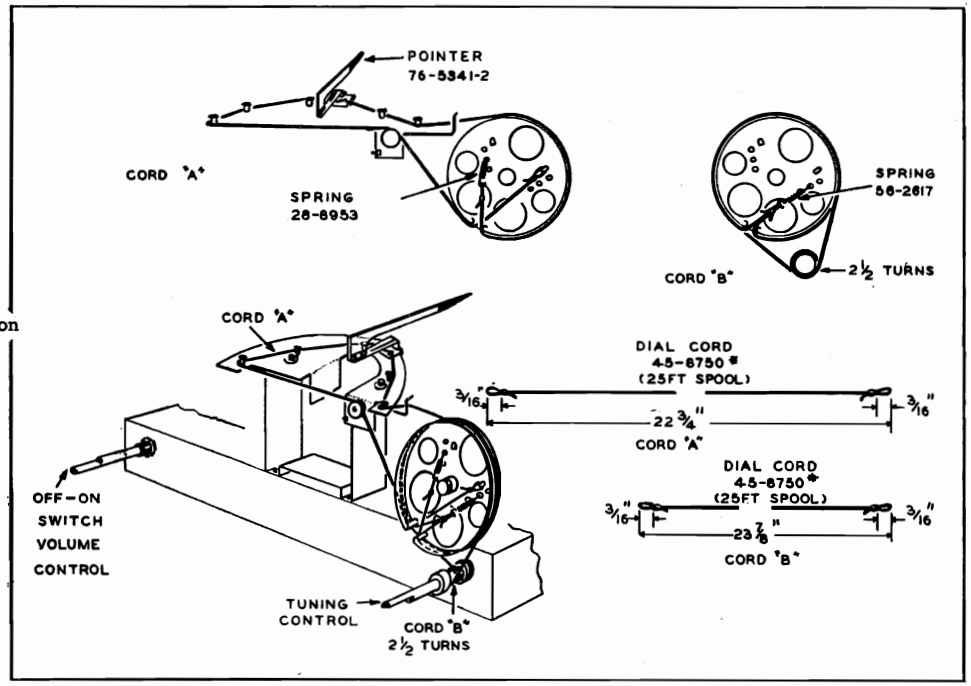

Figure 1. Dial-Cord Installation Details TP9-636A

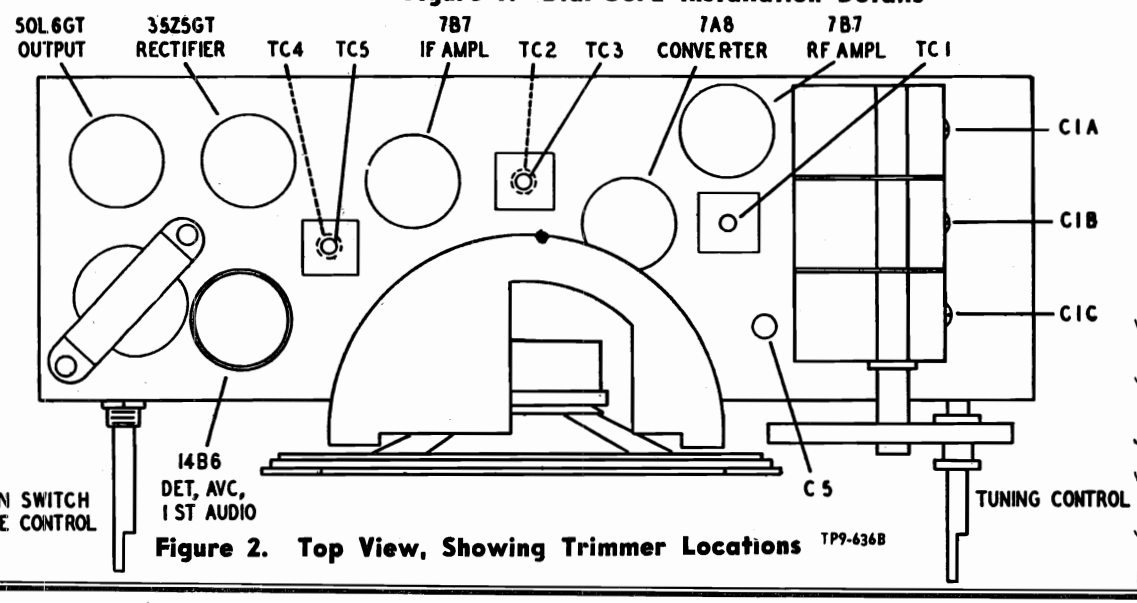

Figure 2. Top View, Showing Trimmer Locations TP9-636B

©John F. Rider
Compliments of www.nucow.com

MODELS 50-920, 50-921, 50-922

ALIGNMENT CHART

STEP	SIGNAL GENERATOR		RADIO		ADJUST
	CONNECTION TO RADIO	DIAL SETTING	DIAL SETTING	SPECIAL INSTRUCTIONS	
1	Through a .1-μf. condenser to stator of r-f section of gang. Ground lead to B-.	455 kc.	Gang fully meshed.	Adjust, in order given, for maximum output.	TC5—2nd i-f sec. TC4—2nd i-f pri. TC3—1st i-f sec. TC2—1st i-f pri.
2	Radiating loop. (See note below.)			Preset 1/2 turn from tight.	C5—osc. series
3	Same as step 2.	1620 kc.	1620 kc.	Adjust for maximum.	C1B—osc. shunt
4	Same as step 2.	1500 kc.	1500 kc.	Adjust for maximum.	C1C—r-f C1A—aerial
5	Same as step 2.	580 kc.	580 kc.	Adjust for maximum while rocking tuning control.	C5—osc. series TC1—r-f core
6	Repeat steps 3 and 4.				

RADIATING LOOP: Make up a 6—8 turn, 6-inch-diameter loop from insulated wire; connect to signal-generator leads and place near radio loop aerial. The loop aerial must be connected to the radio.

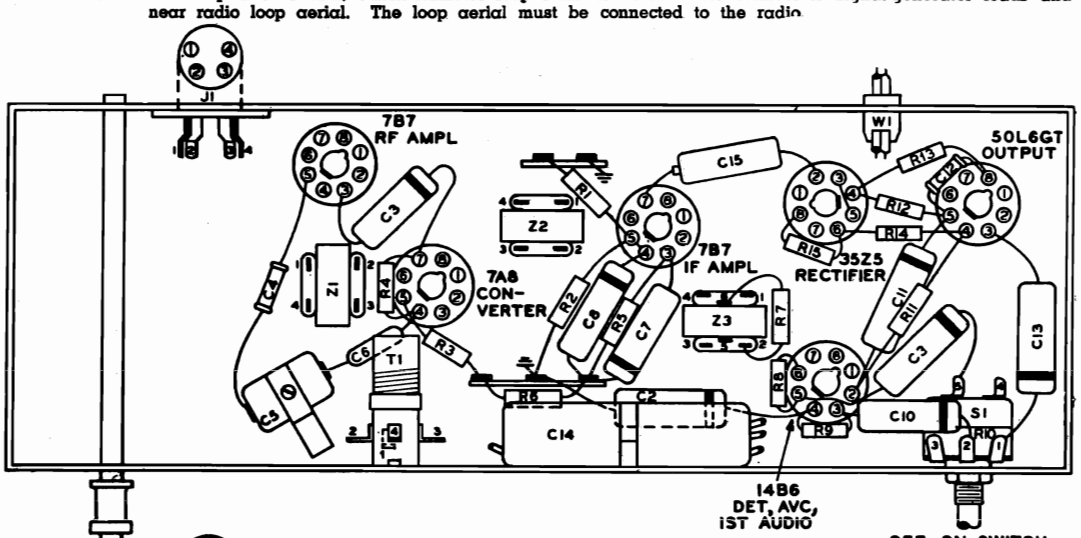

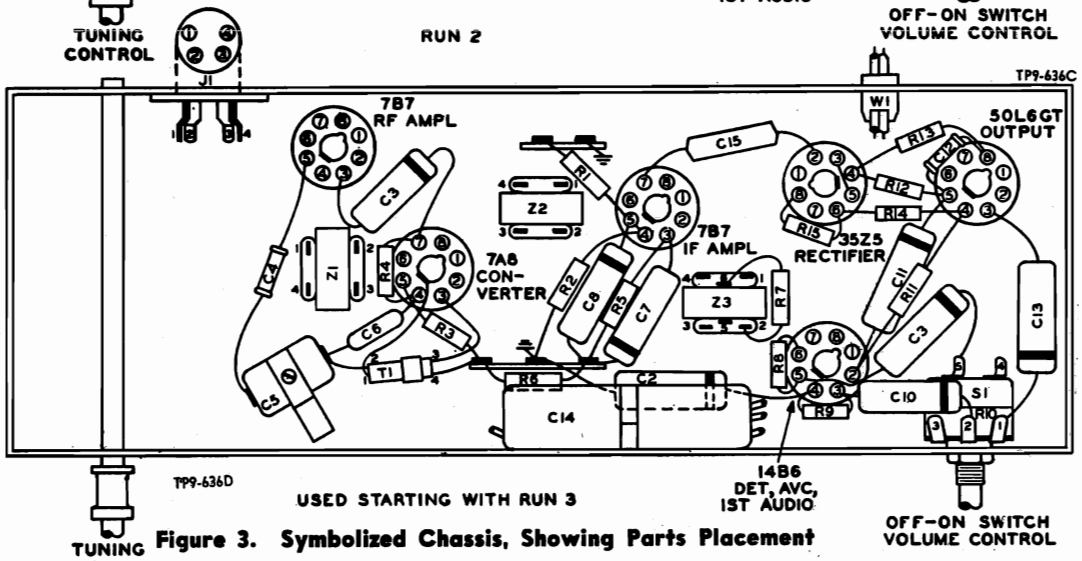

Figure 3. Symbolized Chassis, Showing Parts Placement

PRODUCTION CHANGES

Run 2: I.F. changed from 265 kc. to 455 kc.

Run 3: Oscillator coil, T1, changed from Part No. 32-4190-6 to Part No. 32-4263-3. This change was to save space only; the latter, Part No. 32-4263-3, should be ordered in either case.

Run 4: Condenser C4 changed in value from 20 μμf. Part No. 30-1224-56, to 13 μμf., Part No. 30-1224-68, to insure proper padding at 1620 kc.

©John F. Rider

Compliments of www.nucow.com

MODELS 50-920,
50-921, 50-922

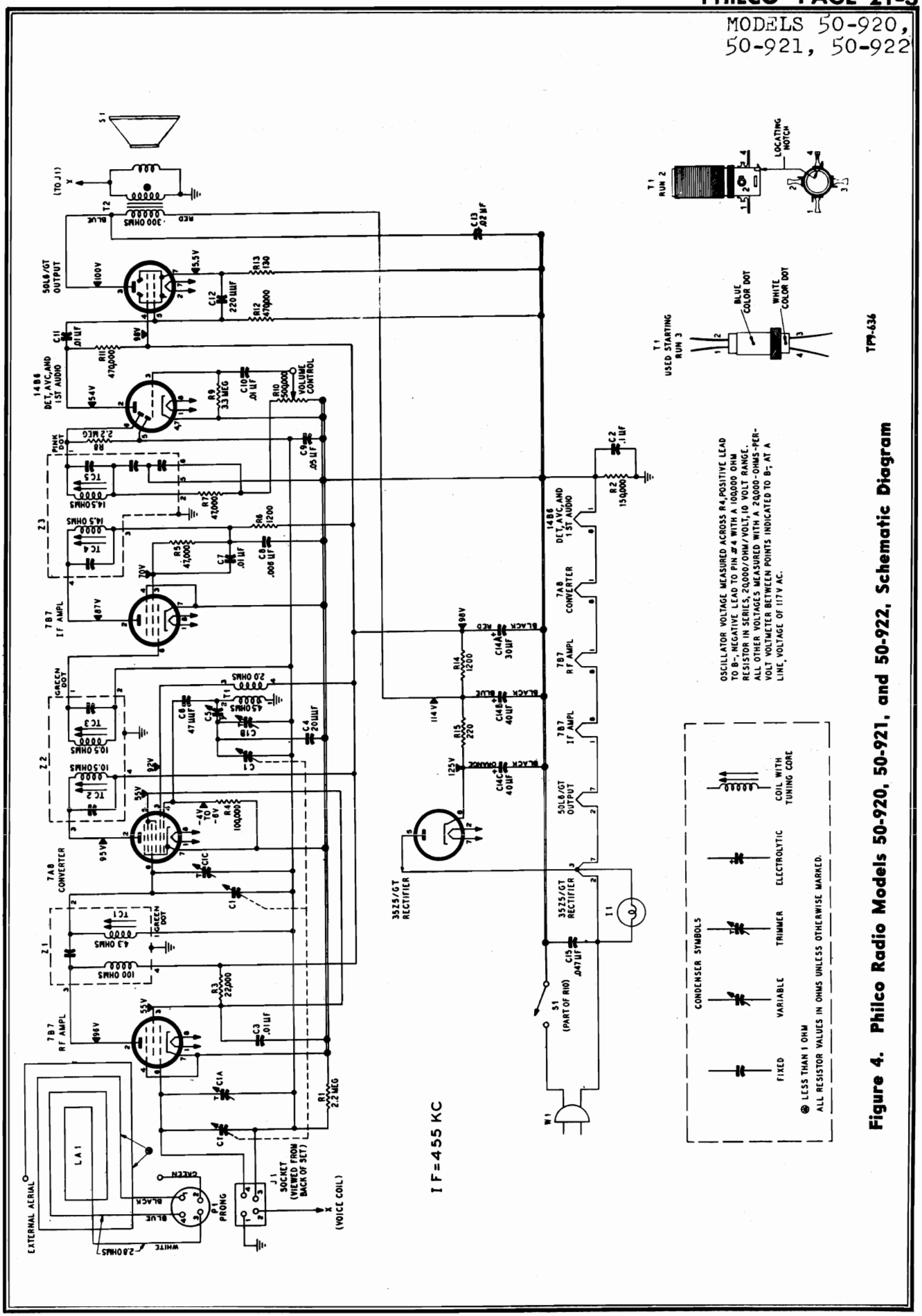

Figure 4. Philco Radio Models 50-920, 50-921, and 50-922, Schematic Diagram

©John F. Rider

Compliments of www.nucow.com

MODELS 50-920,
50-921, 50-922

REPLACEMENT PARTS LIST

NOTE: Part numbers marked with an asterisk (*) are general replacement items. These numbers may not be identical with those on factory parts; also, the electrical values of some replacement items may differ from the values indicated in the schematic diagram and parts list. The values substituted in any case are so chosen that the operation of the radio will be either unchanged or improved. When ordering replacements, use only the "Service Part No."

Reference Symbol	Description	Service Part No.
C1	Condenser, tuning, 3-section	31-2748-1
C1A	Condenser, trimmer, aerial	Part of C1
C1B	Condenser, trimmer, osc.	Part of C1
C1C	Condenser, trimmer, r-f	Part of C1
C2	Condenser, by-pass, .1 μf.	61-0113*
C3	Condenser, screen by-pass, .01 μf.	61-0120*
C4	Condenser, fixed trimmer, temperature comp., 20 $\mu\mu f$.	30-1224-56
C5	Condenser, padder, osc. series	31-6473-17
C6	Condenser, d-c blocking, 47 $\mu\mu f$.	30-1227-5
C7	Condenser, screen by-pass .01 μf.	61-0120*
C8	Condenser, neutralization .006 μf.	45-3500-7*
C9	Condenser, a-v-c filter, .05 μf.	61-0122*
C10	Condenser, d-c blocking, .01 μf.	61-0120*
C11	Condenser, d-c blocking, .01 μf.	61-0120*
C12	Condenser, by-pass, 220 $\mu\mu f$.	62-122001001
C13	Condenser, tone compensation, .02 μf.	61-0108*
C14	Condenser, electrolytic, 3-section	30-2575-27
C14A	Condenser, filter, 30 μf., 150v	Part of C14
C14B	Condenser, filter, 40 μf., 150v	Part of C14
C14C	Condenser, filter, 40 μf., 150v	Part of C14
C15	Condenser, line by-pass, .047 μf.	30-4668-45
I1	Pilot lamp, 6—8v	34-2676
J1	Jack, aerial input	27-6214-1
LA1	Loop aerial, 50-920	30-4052-39
LA1	Loop aerial, 50-921 or 50-922	32-4052-40
LS1	Speaker, p-m, 4 in. by 6 in., oval	36-1633
P1	Loop-aerial plug	27-4788
R1	Resistor, a-v-c load, 2.2 megohms	66-5228340*
R2	Resistor, leakage, 150,0000 ohms	66-4158340*
R3	Resistor, dropping, 22,000 ohms	66-3228340*
R4	Resistor, grid return, 100,000 ohms	66-4108340*
R5	Resistor, screen dropping, 47,000 ohms	66-3478340*
R6	Resistor, decoupling, 1200 ohms	66-2128340*
R7	Resistor, i-f filter, 47,000 ohms	66-3478340*
R8	Resistor, diode load, 2.2 megohms	66-5228340*
R9	Resistor, grid return, 3.3 megohms	66-5338340*
R10	Volume control, 500,000 ohms, with off-on switch	33-5566-13
R11	Resistor, plate load, 470,000 ohms	66-4478340*
R12	Resistor, grid return, 470,000 ohms	66-4478340*
R13	Resistor, cathode bias, 130 ohms	66-1128340*
R14	Resistor, filter, 1200 ohms, 1 watt	66-2124340*
R15	Resistor, filter, 220 ohms, 2 watts	66-1225340*
S1	Switch, off-on	Part of R10
T1	Transformer, oscillator	32-4263-3
T2	Transformer, output	32-8310-3
W1	Line cord	L-2183
Z1	Transformer, r-f	32-4399-2A
Z2	Transformer, 1st i-f	32-4160A
Z3	Transformer, 2nd i-f	32-4240-3A

MISCELLANEOUS

Description	Service Part No.
Cabinet, 50-920 (mahogany)	10770
Cabinet, 50-920 (gray)	10770-1
Back	318-3020
Fastener, back (4)	W-2235FA9
Backplate, ornamental, mahongany cabinet	56-7426FCP
Backplate, ornamental, gray cabinet	56-7426-1FCP
Fastener, backplate mtg.	W-2235-1FA9
Baffle, cardboard	54-7938
Fastener, baffle mtg. (4)	W-2235-2FA9
Bezel, metal	56-7427
Speed nut, bezel mtg. (2)	1W60196FE7
Dial scale, mahogany cabinet	54-5070
Dial scale, gray cabinet	54-5070-2
Knob, mahogany cabinet (2)	54-4718-4
Knob, gray cabinet (2)	54-4718-7
Pointer	76-5341-1
Cabinet, 50-921	76-5378
Back	318-3021
Fastener, back (4)	W-2235FA9
Backplate, ornamental	56-7434
Fastener, backplate mtg.	W-2235-1FA9
Baffle, cardboard	54-7922
Fastener, baffle mtg. (4)	W-2235-2FA9
Dial scale	54-5071
Clip, dial mtg.	56-7808FE11
Knob (2)	54-4718-5
Pointer	76-5341-2
Cabinet, 50-922	10772
Back	318-3022
Fastener, back (4)	W-2235FA9
Backplate, ornamental	56-7435
Fastener, backplate mtg.	W-2235-1FA9
Baffle, cardboard	54-7919
Fastener, baffle mtg. (4)	W-2235-2FA9
Bezel, metal	56-7436
Speed nut, bezel mtg.	1W60196FE7
Dial scale	54-5072
Clip, dial mtg. (2)	56-7572FE11
Knob	54-4718-3
Pointer	76-5341
Backplate, pulley-and-clip assembly	76-5233
Clamp, electrolytic mtg.	56-1466FA5
Dial cord, 25-foot spool	45-8750*
Spring. gang drive	56-2617
Spring, pointer drive	28-8953
Drive shaft	76-3671-5
Bushing, drive shaft	27-9437
Spring, hairpin, drive shaft	57-1468FA3
Panel, wiring, external aerial	38-9837
Panel, wiring, 4-lug	38-9161-1
Plug, aerial, 4-pin	27-4788
Rubber mount, gang mtg. (4)	27-4771-1
Shield, tube, 14B6	56-1566
Socket, Loktal	27-6177
Socket, octal	27-6174
Socket assembly, pilot lamp	27-6233-18

© John F. Rider

Compliments of www.nucow.com

MODELS 50-925
Code 123, 50-926

SPECIFICATIONS

CABINET	
Model 50-925, Code 123	Plastic, brown finish
Model 50-926	Wood, mahogany with brown leatherette, and blonde with green leatherette
CIRCUIT	6-tube superheterodyne plus selenium rectifier
FREQUENCY RANGES	
Broadcast	540—1620 kc.
FM	88—108 mc.
AUDIO OUTPUT	1 watt
OPERATING VOLTAGE	105—120 volts, a.c. or d.c.
POWER CONSUMPTION	35 watts
AERIAL	Built-in, high-impedance loop for AM, line cord for FM; provision for connection of external aerials
INTERMEDIATE FREQUENCIES	
AM	455 kc.
FM	9.1 mc.
PHILCO TUBES (6)	12BA6 FM r-f ampl., 12AT7 osc.-mixer, 12BA6 1st i-f ampl., 12BA6 2nd i-f ampl., 19C8 AM-FM det.-1st audio-a.v.c., 50C5 output, plus selenium rectifier

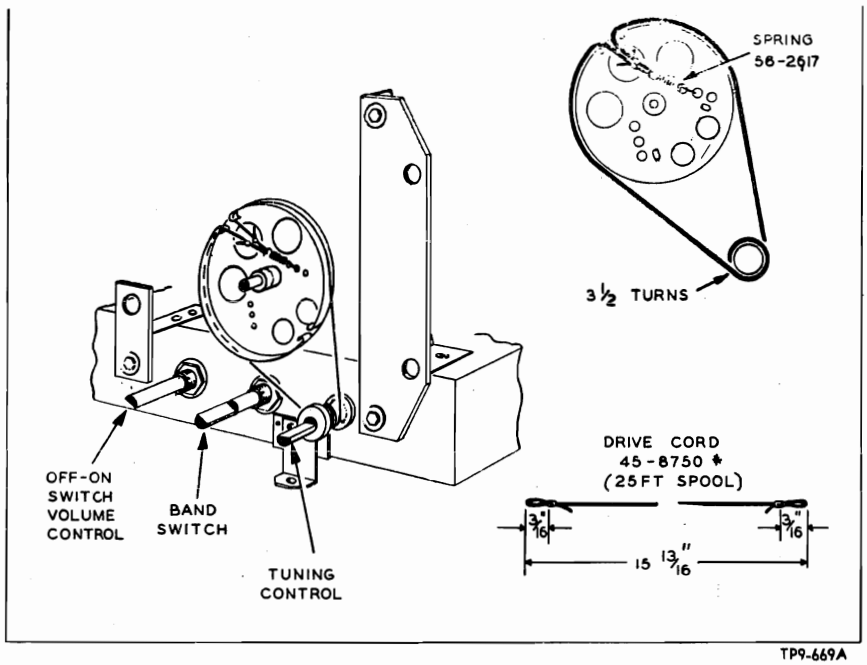

Figure 1. Dial-Cord Installation Details

AM ALIGNMENT PROCEDURE

Make alignment with loop aerial connected to radio. The AM alignment should be completed before the FM alignment is made.

DIAL POINTER — With tuning-condenser plates fully meshed, adjust pointer to coincide with index mark at low-frequency end of scale.

RADIO CONTROLS — Set volume control to maximum, set band switch for broadcast reception, and set tuning control as indicated in chart.

OUTPUT METER — Connect across voice-coil terminals.

SIGNAL GENERATOR — Use AM r-f signal generator, with modulated output. Connect generator and set frequency as indicated in chart.

OUTPUT LEVEL — During alignment, signal-generator output must be attenuated to hold output-meter reading below 1.25 volts.

©John F. Rider

Compliments of www.nucow.com

MODELS 50-925
Code 123, 50-926

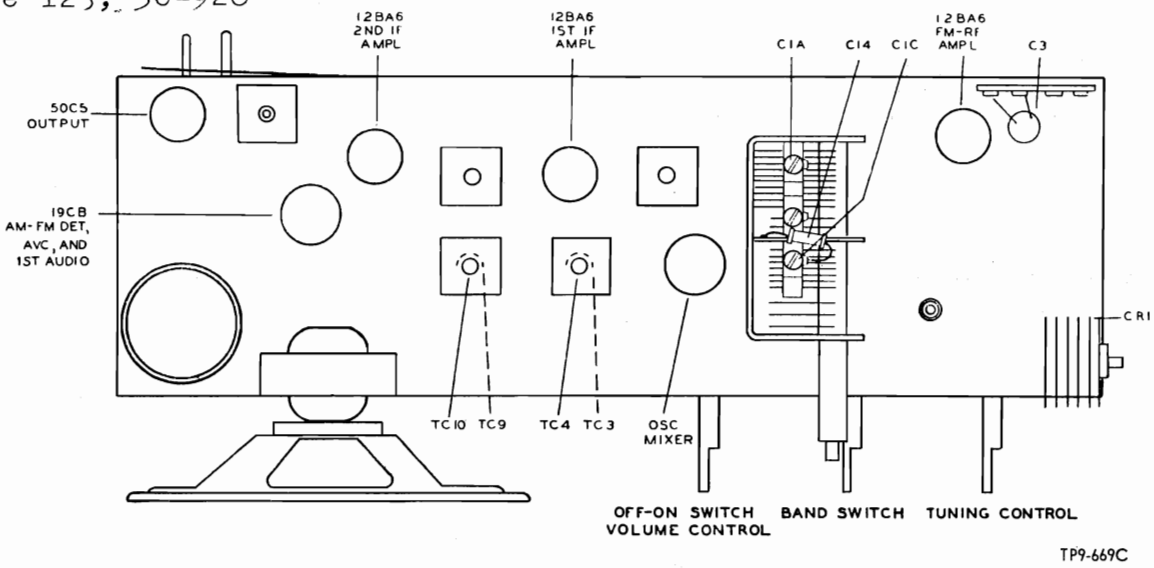

Figure 2. Top View, Showing AM Trimmer Locations

AM ALIGNMENT CHART

STEP	SIGNAL GENERATOR		RADIO		ADJUST
	CONNECTION TO RADIO	DIAL SETTING	DIAL SETTING	SPECIAL INSTRUCTIONS	
1	Ground lead to chassis. Output lead through a .1-μf. condenser to mixer grid (pin 7) of 12AT7.	455 kc.	540 kc. (gang fully meshed)	Adjust for maximum output.	TC10—2nd AM i-f sec. TC9—2nd AM i-f pri. TC4—1st AM i-f sec. TC3—1st AM i-f pri.
2	Radiating loop. (See note below.)	1600 kc.	1600 kc.	Adjust for maximum output.	C1C—osc. trimmer
3	Same as step 2.	1500 kc.	1500 kc.	Adjust for maximum output.	C1A—aerial trimmer

RADIATING LOOP: Make up a six-to-eight-turn, 6-inch-diameter loop from insulated wire; connect to generator terminals, and place near radio loop aerial. Radio loop aerial must be connected.

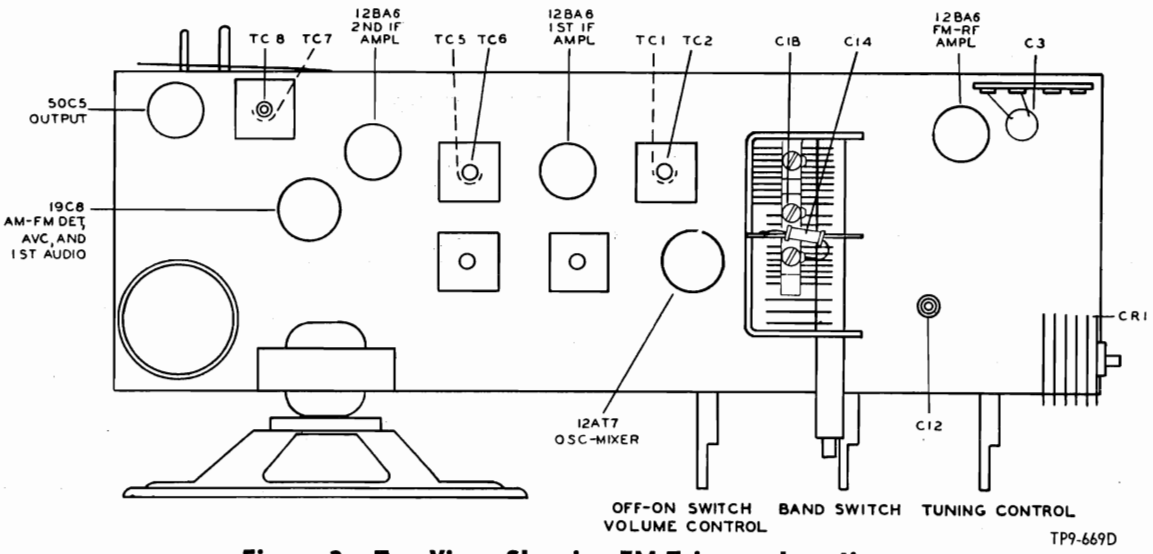

Figure 3. Top View, Showing FM Trimmer Locations

©John F. Rider

Compliments of www.nucow.com

MODELS 50-925
Code 123, 50-926

FM ALIGNMENT PROCEDURE

Make AM alignment first.

RADIO CONTROLS — Set volume control to maximum, set band switch for FM reception, and set tuning control as indicated in chart.

OUTPUT METER — Connect across voice-coil terminals. (This meter is used only for step 3.)

D-C VOLTMETER — Connect negative lead of d-c voltmeter (resistance of at least 20,000 ohms per volt) to pin 2 of 19C8 tube, and positive lead to chassis. Use 0—10-volt range.

SIGNAL GENERATOR — Use AM r-f signal generator, with modulated output. Connect ground lead to chassis. Connect output lead and set frequency as indicated in chart. Generator must have sufficient output to give reading of approximately 8.5 volts on d-c voltmeter; during alignment, generator output must be attenuated to hold meter reading at this value.

NOTE: Before starting FM alignment, allow radio and signal generator to warm up for 15 minutes.

FM ALIGNMENT CHART

STEP	SIGNAL GENERATOR		RADIO		ADJUST
	CONNECTION TO RADIO	DIAL SETTING	DIAL SETTING	SPECIAL INSTRUCTIONS	
1	Through a .1-μf. condenser to control grid (pin 1) of 12BA6 1st i-f ampl.	9.1 mc.	88 mc.	Adjust tuning cores for maximum reading on d-c voltmeter. Attenuate signal generator to maintain a reading of approximately 10 volts. Repeat adjustments until no further improvement is noted. After this step, do not disturb these tuning cores except as directed in step 3.	TC8—discriminator sec. TC7—discriminator pri. TC6—FM 2nd i-f sec. TC5—FM 2nd i-f pri.
2	Through a .1-μf. condenser to mixer grid (pin 7) of 12AT7.	9.1 mc.	88 mc.	Adjust tuning cores for maximum reading on d-c voltmeter. Repeat adjustments until no further improvement is noted. Do not disturb these tuning cores after this step.	TC2—FM 1st i-f sec. TC1—FM 1st i-f pri.
3	Same as step 1.	9.1 mc.	88 mc.	Adjust tuning core for minimum reading on output meter. This adjustment is critical; repeat to make certain it is correct.	TC8—discriminator sec.
4	To terminal 1 of J1.	105 mc.	105 mc.	Adjust trimmer for maximum reading on d-c voltmeter.	C12—FM osc.
5	Same as step 4.	105 mc.	105 mc.	Same as step 4.	C1B—FM r-f
6	Same as step 4.	92 mc.	92 mc.	Adjust coil for maximum reading on d-c voltmeter.	L4—osc. (tracking)
7	Same as step 4.	92 mc.	92 mc.	Same as step 6.	L2—FM r-f (tracking)
8	Same as step 4.	105 mc.	105 mc.	Same as step 4.	C12—FM osc.
9	Repeat steps 4 through 8 until no further improvement is noted.				

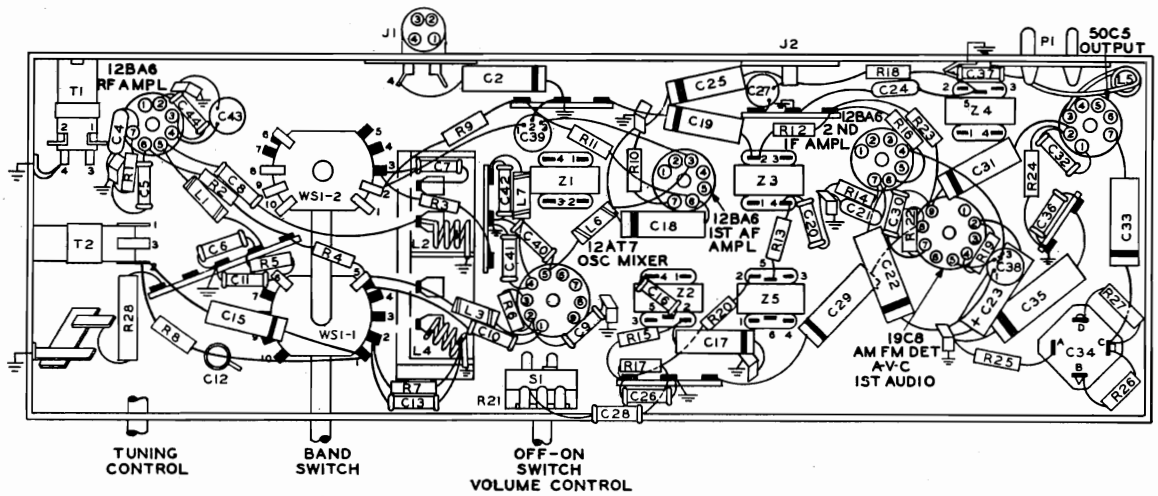

CRITICAL LEAD DRESS:
FM IF REGENERATION WILL RESULT UNLESS
(1) THE RED B+ LEAD BETWEEN LUG 3 OF Z4 AND LUG 3 OF Z5 IS DRESSED AROUND THE GRID SIDE OF THE LAST 12BA6, AND BETWEEN THE GROUND LEAD AND THE TUBE, AND
(2) THE RED LEAD BETWEEN PIN 6 OF THE LAST 12BA6 AND LUG 4 OF Z5 IS DRESSED AWAY FROM Z3 AND HORIZONTAL TO THE CHASSIS (NOT DRESSED DOWN TO THE CHASSIS)

TP9-669B

Figure 4. Symbolized Chassis, Showing Parts Placement

©John F. Rider

Compliments of www.nucow.com

MODELS 50-925
Code 123, 50-926

REPLACEMENT PARTS LIST

NOTE: Part numbers identified by an asterisk (*) are general replacement items. These numbers may not be identical with those on factory parts; also, the electrical values of some replacement items may differ from the values indicated in the schematic diagram and parts list. The values substituted in any case are so chosen that the operation of the radio will be either unchanged or improved. When ordering replacements, use only the "Service Part No."

Reference Symbol	Description	Service Part No.
C1	Condenser, tuning, 4-section (2 for AM, 2 for FM)	31-2733-4
C1A	Condenser, trimmer, AM aerial	Part of C1
C1B	Condenser, trimmer, FM r-f	Part of C1
C1C	Condenser, trimmer, AM oscillator	Part of C1
C2	Condenser, aerial isolating, .01 μf.	61-0120*
C3	Condenser, aerial isolating, ceramic button, .005 μf.	30-1238-1
C4	Condenser, cathode by-pass, 100 μμf.	60-10105407*
C5	Condenser, screen by-pass, 1500 μμf.	62-215001011*
C6	Condenser, r-f by-pass, 100 μμf.	62-110009001*
C7	Condenser, d-c blocking, 220 μμf.	62-122001001*
C8	Condenser, d-c blocking, 220 μμf.	62-122001001*
C9	Condenser, by-pass, 100 μμf.	62-110009001*
C10	Condenser, d-c blocking, 220 μμf.	62-122001001*
C11	Condenser, r-f by-pass, 100 μμf.	62-110009001*
C12	Condenser, trimmer, FM oscillator	31-6511
C13	Condenser, cathode by-pass, FM, 220 μμf.	62-122001001*
C14	Condenser, fixed trimmer, AM oscillator, 13 μμf.	30-1224-42
C15	Condenser, cathode by-pass, AM, .01 μf.	61-0120*
C16	Condenser, fixed trimmer, i-f, 100 μμf.	62-110009001*
C17	Condenser, a-v-c filter, .01 μf.	61-0120*
C18	Condenser, screen by-pass, .002 μf.	61-0062*
C19	Condenser, coupling (in FM position, neutralization), .01 μf.	61-0120*
C20	Condenser, by-pass, 100 μμf.	62-110009001*
C21	Condenser, cathode by-pass, molded, .01 μf.	30-1226-10
C22	Condenser, screen by-pass, .002 μf.	61-0062*
C23	Condenser, electrolytic, FM-detector filter, 2 μf., 50v	30-2417-7
C24	Condenser, de-emphasis, molded, .01 μf.	30-1226-10
C25	Condenser, de-emphasis, molded, .0022 μf.	45-3505-54
C26	Condenser, by-pass, 100 μμf.	62-110009001*
C27	Condenser, d-c blocking, ceramic button, .005 μf.	30-1238-1
C28	Condenser, i-f by-pass, 100 μμf.	62-110009001*
C29	Condenser, d-c blocking, .02 μf.	61-0108*
C30	Condenser, plate by-pass, 680 μμf.	62-168001001
C31	Condenser, d-c blocking, .006 μf.	45-3500-7*
C32	Condenser, by-pass, 100 μμf.	62-110009001*
C33	Condenser, tone compensation, .02 μf.	61-0108*
C34	Condenser, electrolytic, 4-section	30-2570-46
C34A	Condenser, cathode by-pass, 25 μf., 25v	Part of C34
C34B	Condenser, filter, 40 μf., 150v	Part of C34
C34C	Condenser, filter, 70 μf., 150v	Part of C34
C34D	Condenser, filter, 40 μf., 150v	Part of C34
C35	Condenser, line by-pass, .04 μf.	45-3500-2*
C36	Condenser, line by-pass, 100 μμf.	62-110009001*
C37	Condenser, line by-pass, 100 μμf.	62-110009001*
C38	Condenser, ceramic button, 2-section	30-1239
C38A	Condenser, filament by-pass, .004 μf.	Part of C38
C38B	Condenser, filament by-pass, .004 μf.	Part of C38
C39	Condenser, ceramic button, 2-section	30-1239
C39A	Condenser, filament by-pass, .004 μf.	Part of C39
C39B	Condenser, r-f by-pass, .004 μf.	Part of C39
C40	Condenser, filament by-pass, 100 μμf.	62-110009001*
C41	Condenser, filament by-pass, 100 μμf.	62-110009001*
C42	Condenser, filament by-pass, 100 μμf.	62-110009001*
C43	Condenser, filament by-pass, ceramic button, .005 μf.	30-1238-1
C44	Condenser, filament by-pass, 100 μμf.	62-110009001*
CR1	Selenium rectifier, 150 ma.	34-8003-2
I1	Pilot lamp, 110—125v, 7 w	34-2605
J1	Jack, FM aerial	27-6214-8
J2	Jack, FM test	27-6180
L1	Coil, FM plate load	32-4061-2
L2	Coil, FM r-f	32-4392-3
L3	Coil, r-f isolating	32-4061-2
L4	Coil, FM oscillator	32-4391-3
L5	Coil, line choke	32-4089-3
L6	Coil, filament choke	32-4061-2
L7	Coil, filament choke	32-4061-2
LA1	Loop aerial, 50-925, Code 123	32-4052-48
LA1	Loop aerial, 50-926	32-4052-47
LA2	Aerial-wire-and-plug assembly, FM	41-3791-1
LS1	Speaker, 5-inch, p.m., with output transformer, 50-925, Code 123	36-1614-4
LS1	Speaker, 5-inch, p.m., with output transformer, 50-926	36-1625-12
P1	Plug, line input	27-4785-7
R1	Resistor, cathode bias, 47 ohms	66-0478340*
R2	Resistor, screen dropping, 1000 ohms	66-2108340*
R3	Resistor, grid return, 1 megohm	66-5108340*
R4	Resistor, plate dropping, 47,000 ohms	66-3478340*
R5	Resistor, plate dropping, 1000 ohms	66-2108340*
R6	Resistor, grid return, 15,000 ohms	66-3158340*
R7	Resistor, cathode bias, 330 ohms	66-1338340*
R8	Resistor, cathode bias, 680 ohms	66-1688340*
R9	Resistor, plate dropping, 4700 ohms	66-2478340*
R10	Resistor, cathode bias, 47 ohms	66-0478340*
R11	Resistor, screen dropping, 1000 ohms	66-2108340*
R12	Resistor, plate dropping, 4700 ohms	66-2478340*
R13	Resistor, grid return, 4700 ohms	66-2478340*
R14	Resistor, cathode bias, 47 ohms	66-0478340*
R15	Resistor, a-v-c filter, 1 megohm	66-5108340*

©John F. Rider

Compliments of www.nucow.com

MODELS 50-925
Code 123, 50-926

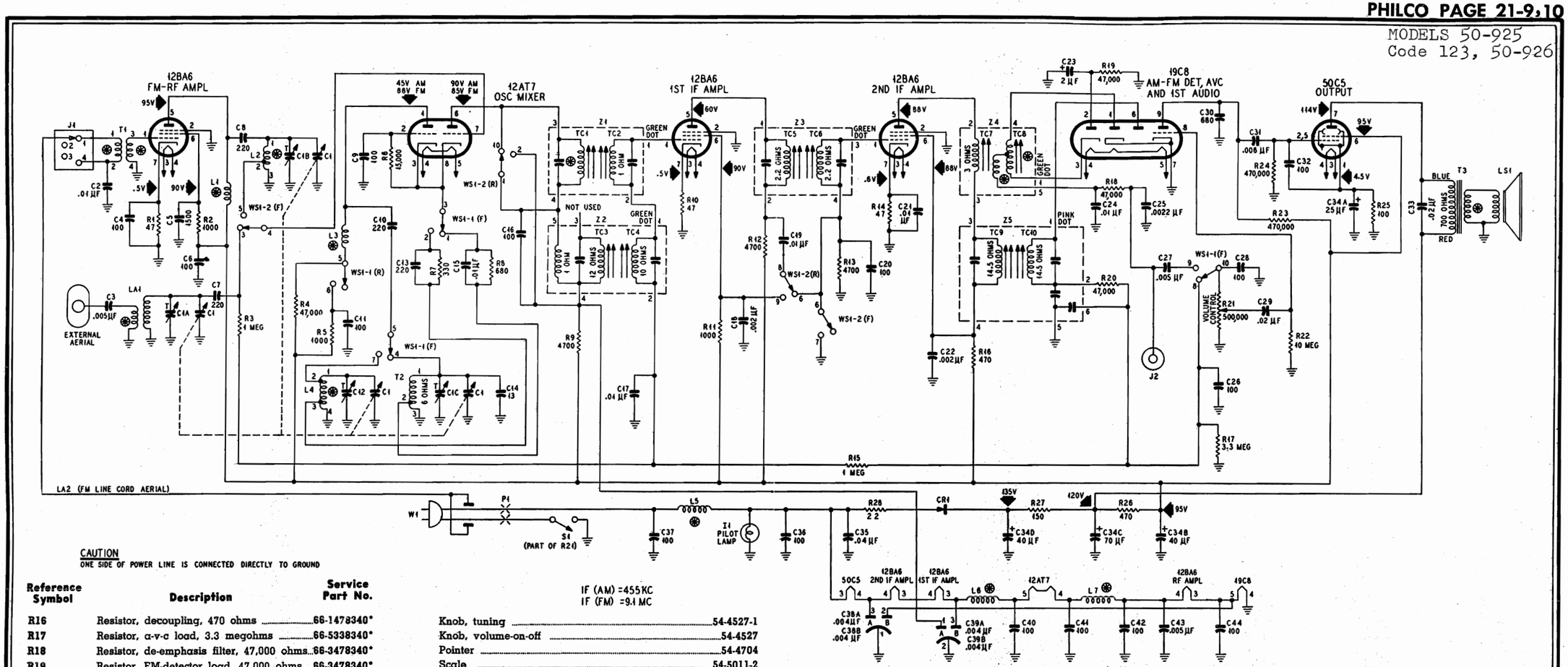

CAUTION
ONE SIDE OF POWER LINE IS CONNECTED DIRECTLY TO GROUND

Reference Symbol	Description	Service Part No.
R16	Resistor, decoupling, 470 ohms	66-1478340*
R17	Resistor, a-v-c load, 3.3 megohms	66-5338340*
R18	Resistor, de-emphasis filter, 47,000 ohms	66-3478340*
R19	Resistor, FM-detector load, 47,000 ohms	66-3478340*
R20	Resistor, i-f filter, 47,000 ohms	66-3478340*
R21	Volume control, 500,000 ohms	33-5566-8
R22	Resistor, grid return, 10 megohms	66-6108340*
R23	Resistor, plate load, 470,000 ohms	66-4478340*
R24	Resistor, grid return, 470,000 ohms	66-4478340*
R25	Resistor, cathode bias, 100 ohms	66-1108340*
R26	Resistor, filter, 470 ohms, 1 w	66-1474340*
R27	Resistor, filter, 150 ohms, 1 w	66-1154340*
R28	Resistor, current limiting, 22 ohms, 2 w	66-0225360*
S1	Switch, off-on	Part of R21
T1	Transformer, FM aerial	32-4390
T2	Transformer, BC oscillator	32-4153-7
T3	Transformer, output	Part of LS1
W1	Line cord	L-2183*
WS	Switch, band	42-1896-1
Z1	Transformer, 1st FM i-f	32-4372A
Z2	Transformer, 1st AM i-f	32-4258-2A
Z3	Transformer, 2nd FM i-f	32-4372-2A
Z4	Transformer, FM discriminator	32-4310
Z5	Transformer, 2nd AM i-f	32-4240A

MISCELLANEOUS

Description	Service Part No.
Cabinet (50-925, Code 123)	10714-4
Back	54-7819
Baffle-and-cloth assembly	40-7535-1
Speed nut, baffle mounting (4 required)	1W60210FE7
Knob, FM-AM	54-4527-21

IF (AM) =455KC
IF (FM) =9.1 MC

Knob, tuning	54-4527-1
Knob, volume-on-off	54-4527
Pointer	54-4704
Scale	54-5011-2
Window, acetate	54-4595-2
Clip, window mounting (6 required)	56-7181FE7
Cabinet (50-926 mahogany)	10786
Cabinet (50-926 blonde)	10786-1
Back	54-8028
Baffle-and-cloth assembly, masonite	40-7844
Foot, front, brass (2 required)	56-7778
Foot, rear, felt (2 required)	W2190
Jewel, telltale	54-4304-3
Knob (3 required)	54-4674-2
Pointer	54-4758
Scale	54-5080
Window	54-8034
Bracket-and-clip assembly, pilot-lamp mounting	76-5102
Clip, pilot-lamp mounting	56-3545FA3
Drive Cord	45-8750*
Spring, gang drive	56-2617
Drive-shaft assembly	76-4034-2
Pilot-lamp shield	56-6331FA3
Spring, shield mounting	28-2488FA1
Pilot-lamp-socket assembly	27-6233-53
Shield, rectifier	54-7818
Socket, female, a-c interlock	27-6200-1
Socket, 7-pin miniature (two 12BA6 i-f amplifiers)	27-6203
Socket, 7-pin miniature (50C5)	27-6203-12
Socket, 7-pin miniature, low-loss (12BA6 r-f amplifier)	27-6203-1
Socket, 9-pin miniature (19C8)	27-6203-5
Socket, 9-pin miniature, low-loss (12AT7)	27-6203-6

WS1 2 POSITION WAFER SWITCH SHOWN IN BROADCAST POSITION
SECTIONS OF SWITCH NUMBERED WS1-1 AND WS1-2 FROM FRONT TO REAR
(F) INDICATES FRONT CONTACTS LOOKING FROM KNOB END
(R) INDICATES REAR CONTACTS LOOKING THROUGH FROM KNOB END

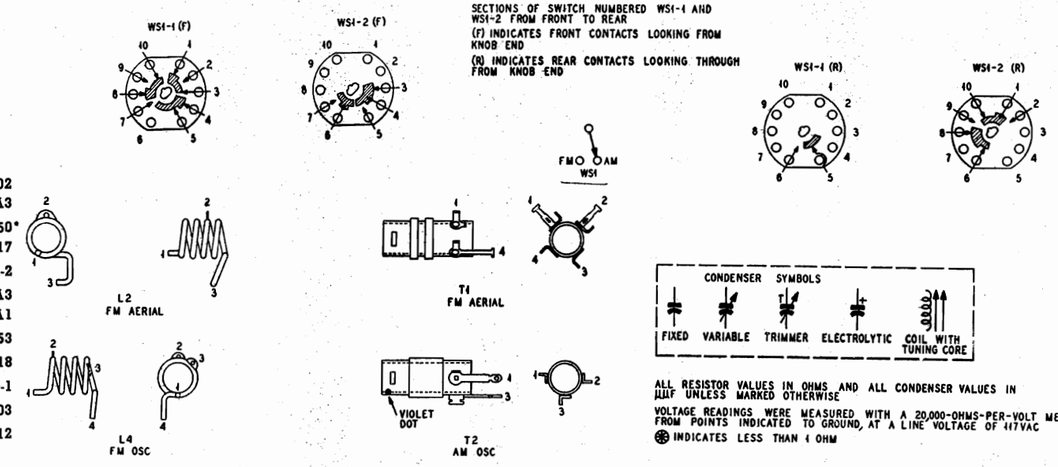

ALL RESISTOR VALUES IN OHMS AND ALL CONDENSER VALUES IN µµF UNLESS MARKED OTHERWISE

VOLTAGE READINGS WERE MEASURED WITH A 20,000-OHMS-PER-VOLT METER FROM POINTS INDICATED TO GROUND, AT A LINE VOLTAGE OF 117VAC

⊛ INDICATES LESS THAN 1 OHM

©John F. Rider

Compliments of www.nucow.com

MODELS 50-1721,
50-1723, 50-1724

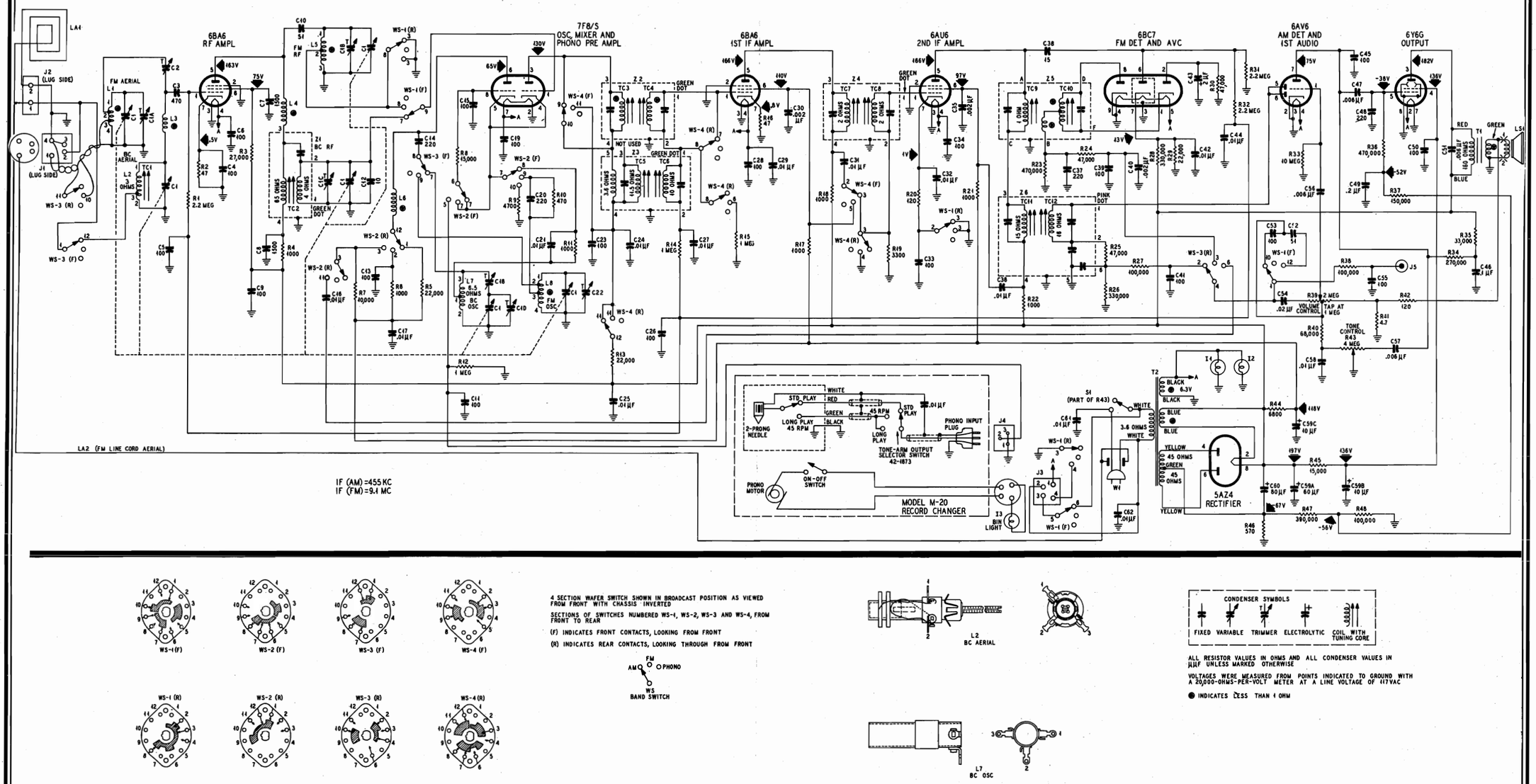

Figure 4. Philco Radio-Phonograph Models 50-1721, 50-1723, and 50-1724, Schematic Diagram

RECORD CHANGER: Model M-20, on pages RCD.CH.20-1 through RCD.CH.20-16.

©John F. Rider

Compliments of www.nucow.com

MODELS 50-1721, 50-1723, 50-1724

SPECIFICATIONS

CABINET
- Model 50-1721 ..... Wood console, mahogany finish
- Model 50-1723 ..... Wood console, mahogany finish
- Model 50-1724 ..... French provincial, mahogany finish, leather top

CIRCUIT ..... 8-tube superheterodyne

FREQUENCY RANGES
- Standard broadcast ..... 540—1630 kc.
- FM ..... 88—108 mc.

AUDIO OUTPUT ..... 5 watts

OPERATING VOLTAGE ..... 117 volts, 60 cycles, a.c.

POWER CONSUMPTION
- Radio ..... 110 watts
- Phonograph ..... 125 watts

AERIALS ..... Built-in broadcast loop; FM line-cord aerial; provision for connection of external aerials

INTERMEDIATE FREQUENCIES
- AM ..... 455 kc.
- FM ..... 9.1 mc.

PHILCO TUBES (8) ..... 6BA6 r-f ampl., 7F8/S osc.-mixer-phono preampl., 6BA6 1st i-f ampl., 6AU6 2nd i-f ampl., 6BC7 FM det.-a.v.c., 6AV6 AM det.-1st audio, 6Y6G output, 5AZ4 rectifier

RECORD PLAYER ..... Philco Model M-20 All-Speed Automatic Record Changer (For service information, refer to Service Manual PR-1731.)

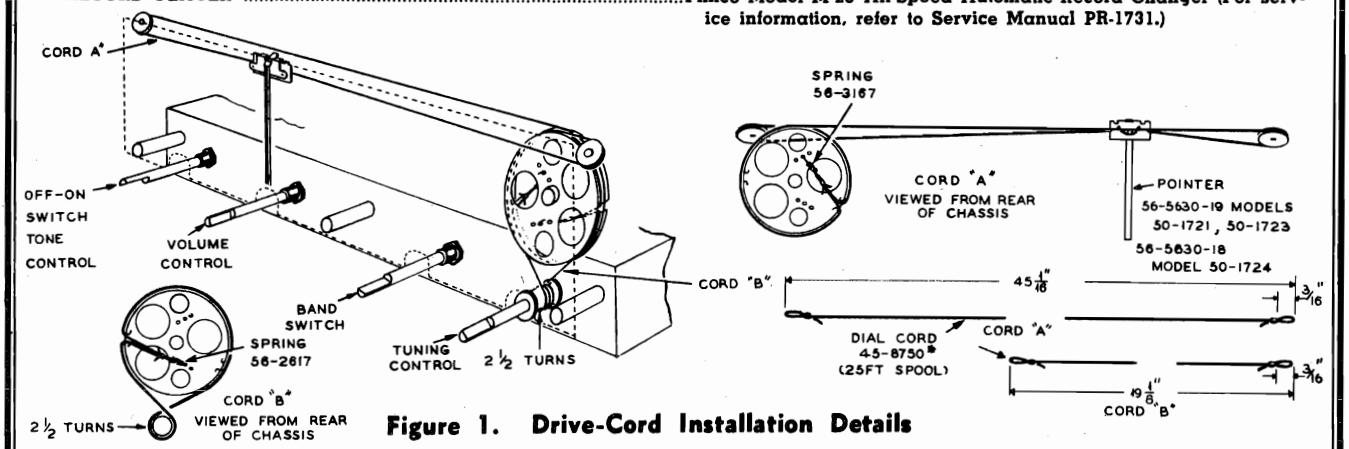

Figure 1. Drive-Cord Installation Details

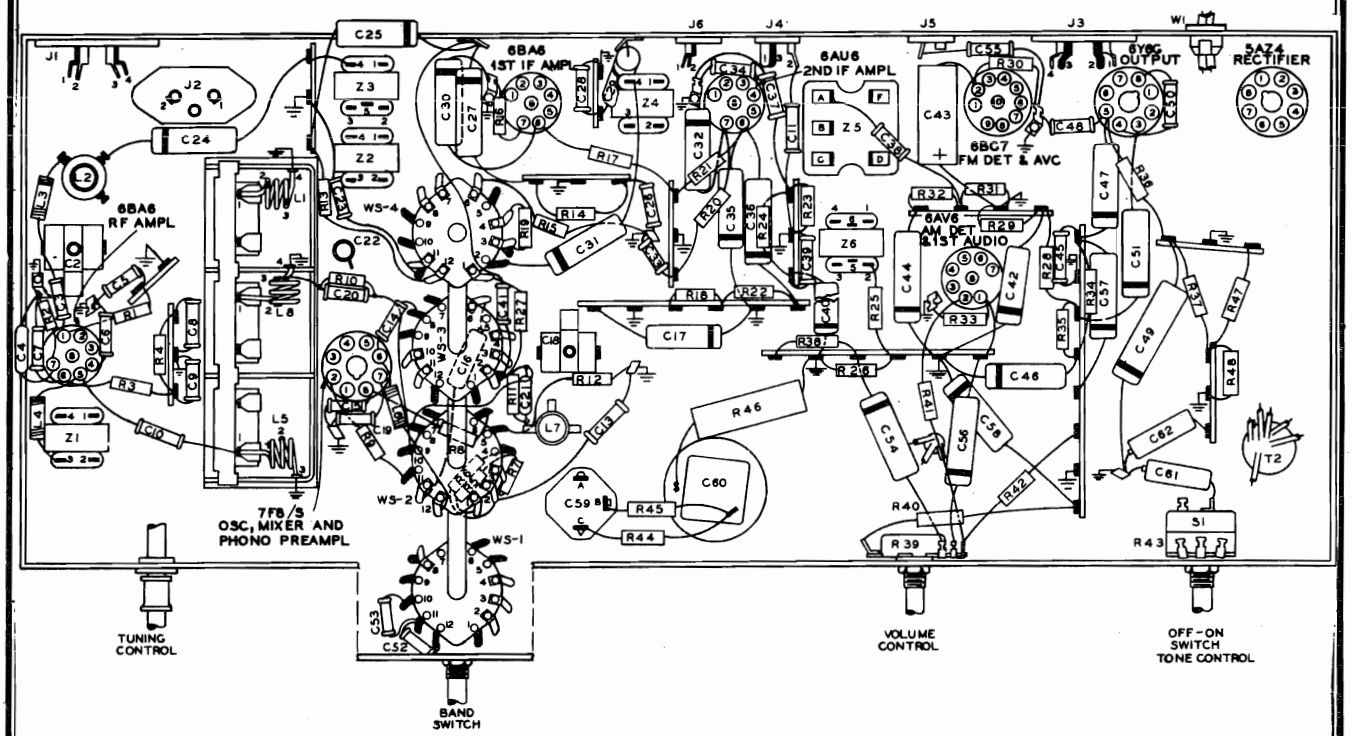

Figure 2. Symbolized Chassis, Showing Parts Placement

© John F. Rider

Compliments of www.nucow.com

MODELS 50-1721,
50-1723, 50-1724

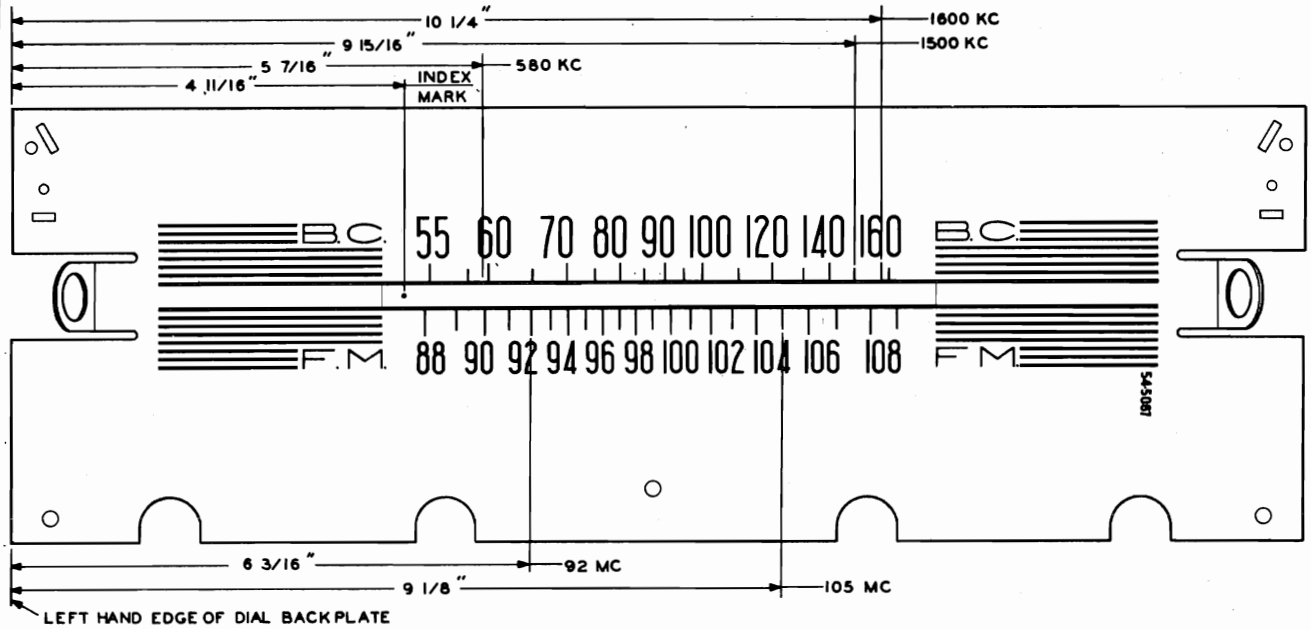

Figure 3. Dial-Backplate Calibration Measurements

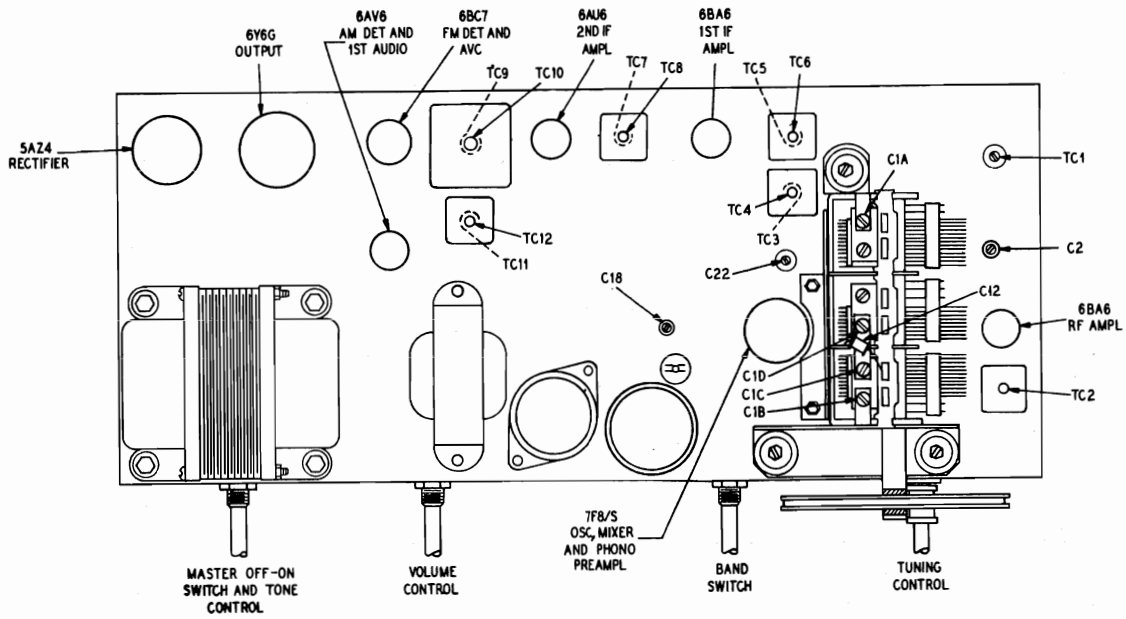

Figure 5. Top View, Showing Trimmer Locations

AM ALIGNMENT PROCEDURE

Make alignment with loop aerial connected to radio. The AM alignment should be made before the FM alignment.

DIAL POINTER: Calibration and pointer-index measurements are shown in figure 5. With tuning gang fully meshed, set pointer to index mark.

OUTPUT METER: Connect across speaker voice-coil terminals.

SIGNAL GENERATOR: Connect AM r-f signal generator as indicated in chart. Use modulated output.

RADIO CONTROLS: Set volume control to maximum, tone control counterclockwise, and band switch to broadcast position.

OUTPUT LEVEL: During alignment, adjust signal-generator output to hold output-meter indication below 1.25 volts.

© John F. Rider

Compliments of www.nucow.com

MODELS 50-1721, 50-1723, 50-1724

AM ALIGNMENT CHART

STEP	SIGNAL GENERATOR		RADIO		ADJUST
	CONNECTION TO RADIO	DIAL SETTING	DIAL SETTING	SPECIAL INSTRUCTIONS	
1	Through a .1-µf. condenser to mixer grid, pin 1, of 7F8/S.	455 kc.	Gang fully meshed.	Adjust, in order given, for maximum output.	TC12—2nd AM i-f sec. TC11—2nd AM i-f pri. TC6—1st AM i-f sec. TC5—1st AM i-f pri.
2	Radiating loop. (See note below.)	1600 kc.	1600 kc.	Adjust for maximum.	C1D—AM osc. shunt
3	Same as step 2.	580 kc.	580 kc.	Adjust, in order given, for maximum while rocking tuning control.	C18—AM osc. series TC2—AM r-f tuning core TC1—AM ant. tuning core
4	Same as step 2.	1500 kc.	1500 kc.	Adjust, in order given, for maximum.	C1C—AM r-f shunt C2—AM r-f shunt
5	Repeat steps 2, 3, and 4 until no further increase is obtained.				

Radiating Loop: Make up a 6-to-8 turn, 6-inch-diameter loop using insulated wire; connect to signal generator leads, and place near radio loop aerial.

FM ALIGNMENT PROCEDURE

Make the AM alignment first.

RADIO CONTROLS: Set volume control to maximum, tone control counterclockwise, and band switch to FM position. Allow radio and signal generator to warm up for at least 15 minutes before making alignment.

SIGNAL GENERATOR: Use a signal generator capable of delivering a 9.1-mc. FM signal with a deviation of ±80 kc., and modulated AM signals of 92 mc., 105 mc., and 108 mc. Philco Model 7008 Precision Visual Alignment Generator fulfills these requirements. NOTE: Model 7008 must be well bonded to radio chassis.

OSCILLOSCOPE: Connect to FM TEST jack. Model 7008 is suggested.

OUTPUT METER: Connect across speaker voice-coil terminals.

R-F COIL NOTE: Check resonance of circuits containing coils L1, L5, and L8 by inserting each end of a tuning wand, such as Philco Part No. 45-8885, into coil. If signal strength increases when powdered-iron end is inserted, compress turns slightly. If signal strength increases when brass end is inserted, spread turns slightly. If signal strength decreases when each end is inserted, no adjustment is necessary. Do not spread or compress turns excessively; only a small change is required at these high frequencies.

FM ALIGNMENT CHART

STEP	SIGNAL GENERATOR		RADIO		ADJUST
	CONNECTION TO RADIO	DIAL SETTING	DIAL SETTING	SPECIAL INSTRUCTIONS	
1	Through a .1-µf. condenser to pin 1 of 6AU6*.	9.1 mc. ±80 kc. deviation.	Gang fully meshed.	Adjust TC4B for correct crossover. Adjust TC4A for maximum and equal peaks. Repeat.	TC4B—FM det. sec. TC4A—FM det. pri.
2	1-µf. condenser to pin 1 of 6BA6*.	9.1 mc. ±80 kc. deviation.	Gang fully meshed.	Adjust, in order given, for maximum and equal peaks. Repeat.	TC3B—FM 2nd i-f sec. TC3A—FM 2nd i-f pri.
3	Through a .1-µf. condenser to pin 1 of 7F8/S*.	9.1 mc. ±80 kc. deviation.	Gang fully meshed.	Adjust, in order given, for maximum and equal peaks. Repeat.	TC1B—FM 1st i-f sec. TC1A—FM 1st i-f pri.
4	Through a 300-ohm dummy aerial to FM aerial socket.	108 mc.	108 mc.	Adjust trimmer for maximum reading on output meter.	C22—FM osc.
5	Same as step 4.	105 mc.	105 mc.	Adjust for maximum while rocking gang.	C1B—FM r-f C1A—FM aerial
6	Same as step 4.	92 mc.	92 mc.	Adjust coils, in order given, for proper resonance (see R-F COIL NOTE).	L8—FM osc. coil L5—FM r-f coil L1—FM aerial coil

*CAUTION: Do not overload! When aligning the i-f stages, the curve will be distorted or destroyed if too great a signal is used. To check, attenuate the signal input. If the curve changes in form, rather than merely decreasing in amplitude, the stage is overloaded.

© John F. Rider

Compliments of www.nucow.com

MODELS 50-1721, 50-1723, 50-1724

REPLACEMENT PARTS LIST

NOTE

Part numbers marked with an asterisk (*) are general replacement items. These numbers may not be identical to those on factory parts; also, the electrical values of some replacement items may differ from the values indicated in the schematic diagram and parts list. The values substituted in any case are so chosen that the operation of the instrument will be either unchanged or improved. When ordering replacements, use only the "Service Part No."

Reference Symbol	Description	Service Part No.
C1	Condenser, tuning gang, 6 sections	31-2750
C1A	Condenser, trimmer, FM aerial	Part of C1
C1B	Condenser, trimmer, FM r-f	Part of C1
C1C	Condenser, trimmer, AM r-f	Part of C1
C1D	Condenser, trimmer, AM osc.	Part of C1
C2	Condenser, series padder, AM aerial	31-6473-6
C3	Condenser, d-c blocking, 470 μμf.	62-147001001*
C4	Condenser, cathode by-pass, 100 μμf.	60-10105407*
C5	Condenser, a-v-c by-pass, 100 μμf.	62-110009001*
C6	Condenser, filament by-pass, 100 μμf.	62-110009001*
C7	Condenser, screen by-pass, 1500 μμf.	62-215001011*
C8	Condenser, plate decoupling, 1500 μμf.	62-215001011*
C9	Condenser, r-f by-pass, 100 μμf.	62-110009001*
C10	Condenser, d-c blocking, 51 μμf.	62-051009001*
C11	Condenser, tone compensation, phono, 100 μμf.	62-110009001*
C12	Condenser, fixed trimmer, 10 μμf.	62-010009001
C13	Condenser, FM plate by-pass, 100 μμf.	62-110009001*
C14	Condenser, d-c blocking, 220 μμf.	62-122001001
C15	Condenser, oscillator grid, 100 μμf.	62-110009001*
C16	Condenser, d-c blocking, phono coupling, .01 μf.	61-0120*
C17	Condenser, by-pass, .01 μf.	61-0120*
C18	Condenser, series padder, broadcast	31-6473-7
C19	Condenser, filament by-pass, 100 μμf.	62-110009001*
C20	Condenser, d-c blocking, 220 μμf.	62-122001001
C21	Condenser, d-c blocking, .01 μf.	61-0120*
C22	Condenser, FM trimmer	31-6511
C23	Condenser, r-f by-pass, 100 μμf.	62-110009001*
C24	Condenser, plate decoupling, .01 μf.	61-0120*
C25	Condenser, by-pass, .01 μf.	61-0120*
C26	Condenser, a-v-c by-pass, 100 μμf.	62-110009001*
C27	Condenser, a-v-c decoupling, .01 μf.	61-0120*
C28	Condenser, filament by-pass, 100 μμf.	62-110009001*
C29	Condenser, filament by-pass, .01 μf.	61-0120*
C30	Condenser, screen by-pass, .002 μf.	61-0062*
C31	Condenser, plate decoupling, .01 μf.	61-0120*
C32	Condenser, cathode by-pass, .01 μf.	61-0120*
C33	Condenser, r-f by-pass, 100 μμf.	62-110009001*
C34	Condenser, filament by-pass, 100 μμf.	62-110009001*
C35	Condenser, screen by-pass, .002 μf.	61-0062*
C36	Condenser, neutralizing, .01 μf.	61-0120*
C37	Condenser, i-f by-pass, 220 μμf.	62-122001001*
C38	Condenser, d-c blocking, a-v-c rectifier coupling, 15 μμf.	62-015009001
C39	Condenser, i-f by-pass, 100 μμf.	62-110009001*
C40	Condenser, de-emphasis, .002 μf.	61-0062*
C41	Condenser, i-f by-pass, 100 μμf.	62-110009001*
C42	Condenser, by-pass, .01 μf.	61-0120*
C43	Condenser, electrolytic, diode load filter, 2 μf.	30-2417-7
C44	Condenser, a-v-c filter, .01 μf.	61-0120*
C45	Condenser, plate by-pass, 100 μμf.	62-110009001*
C46	Condenser, plate by-pass, .1 μf.	61-0113*
C47	Condenser, d-c blocking, .006 μf.	45-3500-7*
C48	Condenser, grid by-pass, 220 μμf.	62-122001001
C49	Condenser, bias filter, .2 μf.	45-3500-3*
C50	Condenser, screen by-pass, 100 μμf.	62-110009001*
C51	Condenser, tone compensation, .006 μf.	45-3500-7*
C52	Condenser, phono tone compensation, 51 μμf.	62-051009001
C53	Condenser, AM tone compensation, 100 μμf.	61-110009001*
C54	Condenser, d-c blocking, .02 μf.	61-0108*
C55	Condenser, i-f by-pass, 100 μμf.	61-110009001*
C56	Condenser, d-c blocking, .006 μf.	45-3500-7*
C57	Condenser, hi-cut, .006 μf.	45-3500-7*
C58	Condenser, bass boost, .01 μf.	61-0120*
C59	Condenser, electrolytic, 3 sections	30-2570-45
C59A	Condenser, filter, 60 μf., 400v	Part of C59
C58B	Condenser, filter, 10 μf., 400v	Part of C59
C59C	Condenser, filter, 10 μf., 400v	Part of C59
C60	Condenser, electrolytic, filter, 80 μf., 400v	30-2568-35
C61	Condenser, line filter, .01 μf.	45-3505-41
C62	Condenser, line filter, .01 μf.	45-3505-41
I1	Lamp, pilot, 6.3v	34-2064
I2	Lamp, pilot, 6.3v	34-2064
I3	Lamp, bin light, 6.3v	34-2064
J1	Socket, FM aerial	27-6214-1
J2	Socket, AM aerial	27-6214-14
J3	Socket, phono power	27-6182
J4	Socket, phono input	27-6126
J5	Socket, audio test	27-6180
J6	Socket, speaker	27-6214-12
L1	Coil, FM aerial	32-4415
L2	Coil, bc. aerial	32-4413
L3	Coil, r-f isolating	32-4061-2
L4	Coil, r-f isolating	32-4061-2
L5	Coil, FM r-f	32-4416
L6	Coil, r-f isolating	32-4061-2
L7	Coil, bc. oscillator	32-4153-6
L8	Coil, FM oscillator	32-4414
LA1	Loop aerial, bc., 50-1721	76-4337-7
LA1	Loop aerial, bc., 50-1723	76-4337-5
LA1	Loop aerial, bc., 50-1724	76-4337-6
LA2	Aerial wire and plug assembly, FM	41-3791-1
LS1	Speaker, 10", p.m.	36-1610-6
R1	Resistor, grid return, 2.2 megohms	66-5228340*
R2	Resistor, cathode bias, 47 ohms	66-0478340*
R3	Resistor, screen dropping, 27,000 ohms, 1 watt	66-3274340*
R4	Resistor, plate decoupling, 1000 ohms	66-2108340*

© John F. Rider

Compliments of www.nucow.com

MODELS 50-1721, 50-1723, 50-1724

REPLACEMENT PARTS LIST (Cont.)

Reference Symbol	Description	Service Part No.
R5	Resistor, plate load, bc., 22,000 ohms	66-3228340*
R6	Resistor, plate load, FM, 1000 ohms	66-2108340*
R7	Resistor, plate load, phono, 10,000 ohms	66-3108340*
R8	Resistor, grid return, 15,000 ohms	66-3158340*
R9	Resistor, cathode bias, phono, 4700 ohms	66-2478340*
R10	Resistor, parasitic suppressor, 470 ohms	66-1478340*
R11	Resistor, parasitic suppressor, 1000 ohms	66-2108340*
R12	Resistor, crystal load, 1 megohm	66-5108340*
R13	Resistor, plate dropping, 22,000 ohms	66-3228340*
R14	Resistor, grid return, 1 megohm	66-5108340*
R15	Resistor, grid return, FM, 1 megohm	66-5108340*
R16	Resistor, cathode bias, 47 ohms	66-0478340*
R17	Resistor, screen decoupling, 1000 ohms	66-2108340*
R18	Resistor, plate decoupling, 1000 ohms	66-2108340*
R19	Resistor, grid return, 3300 ohms	66-2338340*
R20	Resistor, cathode bias, 120 ohms	66-1128340*
R21	Resistor, screen decoupling, 1000 ohms	66-2108340*
R22	Resistor, plate decoupling, 1000 ohms	66-2108340*
R23	Resistor, diode return, 470,000 ohms	66-4478340*
R24	Resistor, i-f filter, 47,000 ohms	66-3478340*
R25	Resistor, i-f filter, 47,000 ohms	66-3478340*
R26	Resistor, diode return, 330,000 ohms	66-4338340*
R27	Resistor, isolating, 100,000 ohms	66-4108340*
R28	Resistor, voltage divider, 330,000 ohms	66-4338340*
R29	Resistor, voltage divider, 22,000 ohms	66-3228340*
R30	Resistor, FM diode load, 47,000 ohms	66-3478340*
R31	Resistor, a-v-c load, 2.2 megohms	66-5228340*
R32	Resistor, a-v-c filter, 2.2 megohms	66-5228340*
R33	Resistor, grid return, 10 megohms	66-6108340*
R34	Resistor, plate load, 270,000 ohms	66-4278340*
R35	Resistor, plate decoupling, 33,000 ohms	66-3338340*
R36	Resistor, grid return, 470,000 ohms	66-4478340*
R37	Resistor, bias filter, 150,000 ohms	66-4158340*
R38	Resistor, isolating, 100,000 ohms	66-4108340*
R39	Volume control, 2 megohms (center tapped)	33-5535-27
R40	Resistor, tone compensation, 68,000 ohms	66-3688340*
R41	Resistor, voltage divider, inverse feedback, 4.7 ohms	66-9478340*
R42	Resistor, inverse feedback, 120 ohms	66-1128340*
R43	Tone control, 4 megohms	33-5566-12
R44	Resistor, filter, 6800 ohms, 1 watt	66-2684340*
R45	Resistor, filter, 15,000 ohms, 2 watts	66-3155340*
R46	Resistor, bias, 570 ohms, 9 watts	33-1335-88
R47	Resistor, bias dropping, 390,000 ohms	66-4398340*
R48	Resistor, bias bleeder, 100,000 ohms	66-4108340*
S1	Switch, power off-on	Part of R43
T1	Transformer, output	32-8407
T2	Transformer, power	32-8406
W1	Line cord	L-2183*
WS	Wafer switch	42-1910
Z1	Transformer, bc. r-f	32-4399-3A
Z2	Transformer, 1st FM i-f	32-4372A
Z3	Transformer, 1st AM i-f	32-4258-2A
Z4	Transformer, 2nd FM i-f	32-4372-2A
Z5	Transformer, 3rd FM i-f	32-4417
Z6	Transformer, 2nd AM i-f	32-4240A

MISCELLANEOUS

(Parts common to all models)

Description	Service Part No.
Bin mechanism, l.h.	76-3223-5
Bin mechanism, r.h.	76-3223-6
Frame assembly	76-4104
Sleeve, changer mounting (3 required)	54-7798
Spring, changer mounting, upper, heavier (3 required)	56-7059FA9
Spring, changer mounting, lower, lighter (3 required)	56-7059-1FJ47
Spring, bin mechanism	56-4978
Bullet catch	45-6002
Cable, bin light and phono power	41-3944-3

MISCELLANEOUS (Cont.)

(Parts common to all models)

Description	Service Part No.
Cable, speaker	41-3943-4
Clip, bin-light mounting	56-3545-6FA3
Clip, pilot-lamp mounting (2 required)	56-3545FA3
Coil mount, bc. oscillator	56-3752-3FA1
Dial backplate assembly	76-5161
Drive cord (25-ft. spool)	45-8750*
Spring, gang drive	56-2617
Spring, pointer drive	56-3167
Dome (4 required)	45-6190
Drive shaft	76-5139
Bushing, front, brown bakelite	54-7872
Bushing, rear, black bakelite	27-9437
Spring, hairpin, small, bushing to shaft (2 required)	57-1468FA1
Spring, hairpin, large, bushing to chassis	57-0985FA1
Fish paper	27-9111
Gang Mounting	
Bracket, copper, ground	56-7357
Mount, rubber	54-4651-1
Plate, ground bracket (to chassis)	56-7362FA3
Shield, ground bracket (against gang)	56-7439FA3
Knob (4 required)	54-4718-6
Light shield, bin light	56-6307-7FA3
Pilot-lamp assembly, l.h., 14¼" lead length	27-6233-22
Pilot-lamp assembly, r.h., 25" lead length	27-6233-33
Scale strap (2 required)	56-2234-2
Scale strap	56-4756FE11
Screw, back mounting (15 required)	1W25345FE11
Socket, Loktal, 5AZ4	27-6207
Socket, Loktal, 7F8/S	27-6207-1
Socket, 7-pin miniature	27-6203
Socket, 7-pin miniature, 6BA6 r-f ampl.	27-6203-1
Socket, 9-pin miniature	27-6203-5
Socket, octal	27-6174
Strike plate (4 required)	45-6003

(Parts not common to all models)

Cabinet, Model 50-1721	10751-3
Back	54-7814
Baffle, wood	219-166
Bezel and scale	54-4751-1
Dial scale	54-5068
Door pull	56-6493
Drop door	45-6507
Hinge (2 required)	45-6036
Instrument panel	45-6566
Pointer	56-5630-19
Cabinet, Model 50-1723	10724-3
Back	54-7668
Baffle, wood	219-129
Baffle-and-cloth assembly	40-7548-1
Bezel and scale	54-4751-1
Doors, matched set of 2	45-1664
Door pull (2 required)	56-7128
Hinge, butt, phono drop door (2 required)	56-7127
Hinge, knife, bottom of record storage door	56-5713-3
Hinge, knife, top of record storage door	56-5713-1
Instrument panel	45-6569
Pointer	56-5630-19
Cabinet, Model 50-1724	10781
Back	54-7998
Baffle, wood	219-202
Baffle-and-cloth assembly	40-7831
Bezel	56-5855
Dial scale	54-5067
Doors, matched set of 2	45-6567
Door pull (2 required)	56-7748
Instrument panel	45-6568
Hinge, knife (2 pairs required)	56-7015
Pointer	56-5630-18

© John F. Rider

Compliments of www.nucow.com

MODEL 50-1424

SPECIFICATIONS

CABINET	Wood table model, mahogany finish
CIRCUIT	5-tube superheterodyne
FREQUENCY RANGE	540—1620 kc.
AUDIO OUTPUT	1.2 watts
OPERATING VOLTAGE	105—120 volts, 60 cycles, a.c.
POWER CONSUMPTION	
Radio	30 watts
Phonograph	45 watts
AERIAL	Built-in high-impedance loop; connector for external aerial
INTERMEDIATE FREQUENCY	455 kc.
PHILCO TUBES (5)	7A8 converter, 12BA6 i-f ampl., 14B6 det.-a.v.c.-1st audio ampl., 50L6GT output, 35Z5GT rectifier
PHONOGRAPH	Philco Model M-20 All-Speed Automatic Record Changer. (For service information, refer to Service Manual PR-1731.)

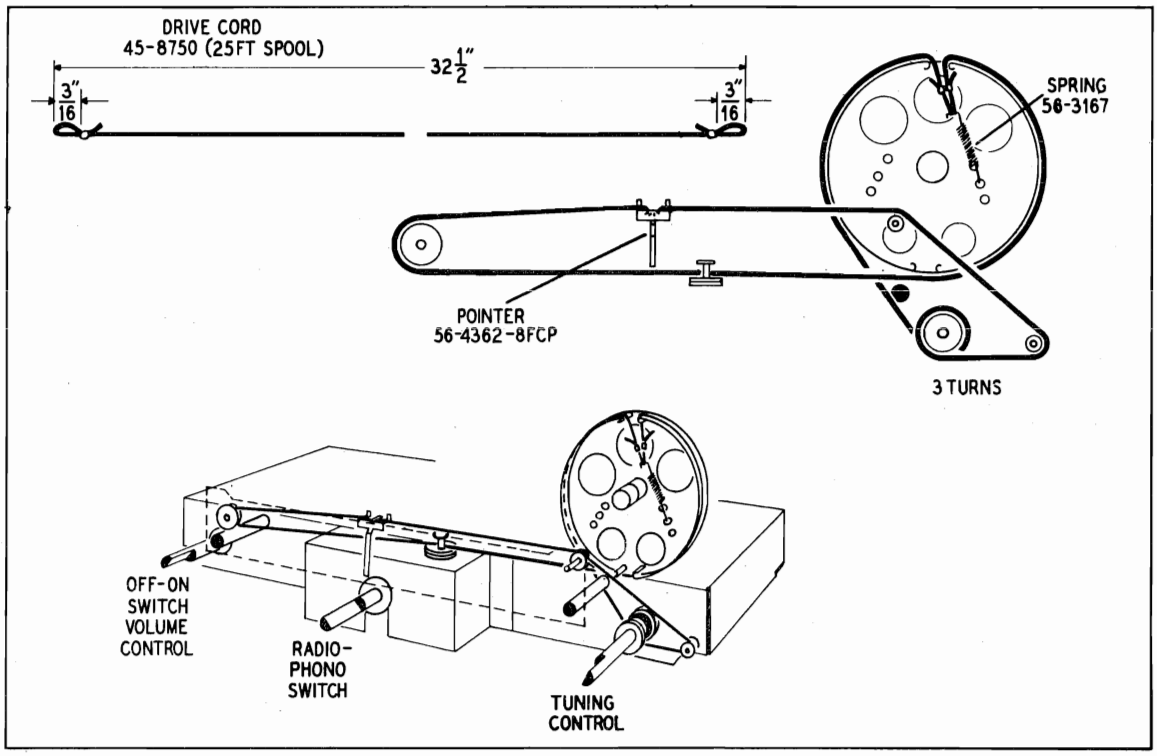

TPO-206

Figure 1. Drive-Cord Installation Details

©John F. Rider

Compliments of www.nucow.com

MODEL 50-1424

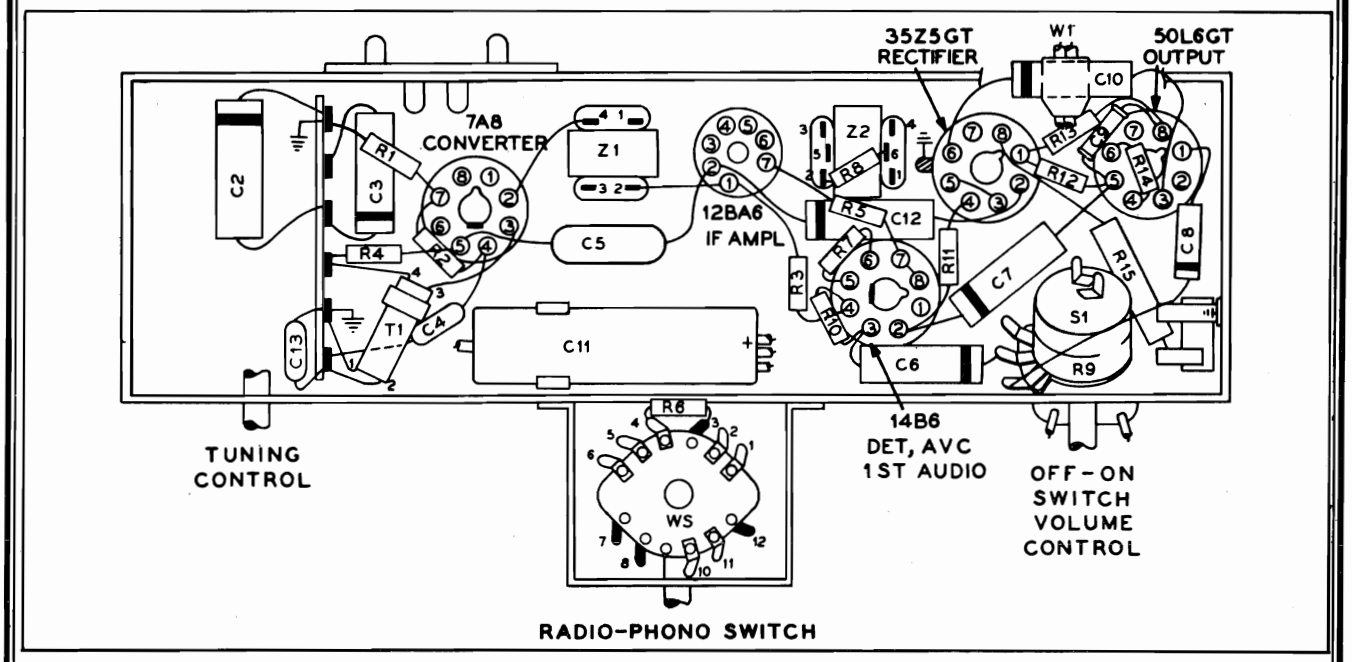

TPO-207

Figure 2. Symbolized Chassis, Showing Parts Placement

REPLACEMENT PARTS LIST

Reference Symbol	Description	Part No. Service
C1	Condenser, tuning, 2-section	31-2751-4
C1A	Condenser, aerial trimmer	Part of C1
C1B	Condenser, oscillator trimmer	Part of C1
C2	Condenser, by-pass, .1 µf.	61-0113*
C3	Condenser, a-v-c filter, .05 µf.	61-0122*
C4	Condenser, d-c blocking, 47 µµf.	62-051009001*
C5	Condenser, screen by-pass, .003 µf.	61-0109*
C6	Condenser, d-c blocking, .01 µf.	61-0120*
C7	Condenser, d-c blocking, .01 µf.	61-0120*
C8	Condenser, tone compensation, hi-cut, .002 µf.	61-0062*
C9	Condenser, grid by-pass, 220 µµf.	62-122001001*
C10	Condenser, tone compensation, .02 µf.	61-0108*
C11	Condenser, electrolytic, 3-section	30-2573
C11A	Condenser, filter, 30 µf., 150v	Part of C11
C11B	Condenser, filter, 25 µf., 150v	Part of C11
C11C	Condenser, filter, 20 µf., 150v	Part of C11
C12	Condenser, line by-pass, .04 µf.	45-3500*
C13	Condenser, temperature compensating, 7.5 µµf.	30-1224-8
I1	Pilot lamp, 6-8 volts, brown bead	34-2068
LA1	Loop-aerial assembly	76-2127-10
LS1	Speaker, 5-¼", round, p-m	36-1629-6
R1	Resistor, leakage, 150,000 ohms	66-4158340*
R2	Resistor, grid return, 100,000 ohms	66-4108340*
R3	Resistor, a-v-c load, 1 megohm	66-5108340*
R4	Resistor, dropping, 39,000 ohms	66-3398340*
R5	Resistor, cathode bias, 68 ohms	66-0688340*
R6	Resisor, diode return, 1 megohm	66-5108340*
R7	Resistor, diode load, 2.2 megohms	66-5228340*
R8	Resistor, i-f filter, 47,000 ohms	66-3478340*
R9	Volume control (with off-on switch) 1 megohm	33-5538-37
R10	Resistor, grid return, 3.3 megohms	66-5338340*
R11	Resistor, plate load, 470,000 ohms	66-4478340*
R12	Resistor, grid return, 470,000 ohms	66-4478340*
R13	Resistor, cathode bias, 130 ohms	66-1128740*
R14	Resistor, filter, 1200 ohms	66-2128340*
R15	Resistor, filter, 220 ohms, 2 watts	66-1225340*
S1	Switch, off-on	Part of R9
T1	Transformer, oscillator	32-4263
T2	Transformer, output	32-8384
W1	Line cord	L-2183*
WS	Switch, radio-phono	42-1922
Z1	Transformer, 1st i-f	32-4160-6A
Z2	Transformer, 2nd i-f	32-42402A

MISCELLANEOUS

Description	Service Part No.
Cabinet	10797
Baffle-and-cloth assembly	40-7883
Bottom	54-8074
Butt hinge (2)	56-6434
Foot (4)	56-7778
Gasket, speaker	54-8089
Washer, fibre, speaker mounting (3)	27-7467
Glass dial scale	54-5086
Strap, scale mounting (2)	56-5155FA3
Knob, volume and tuning	54-4527-26
Knob, radio-phono switch	54-4527-27
Lid support	56-7947
Sleeve, changer mounting (3)	54-7798
Speed nut, changer mounting (3)	W-2554FCP
Spring, changer mounting, heavy (3)	56-7059FA9
Spring, changer mounting, light (3)	56-7059-1FJ47
Dial-Backplate Assembly	76-5705
Drive cord, 25-foot spool	45-8750*
Pointer	56-4362-8FCP
Spring, drive	56-3167
Pilot-lamp assembly	76-1179-7
Pilot-lamp bracket-and-clip assembly	76-5708
Pulley-and-shaft assembly	76-3671-1
Bushing	27-9437
Fastener, hairpin	57-1468FA1
Rubber mount, gang mounting (3)	27-4771-1
Socket, Loktal (2)	27-6177
Socket, miniature	27-6203
Socket, octal (2)	27-6174
Switch cable, shield, and guide assembly	76-5707
Terminal panel, aerial	38-9161-9

© John F. Rider

Compliments of www.nucow.com

MODEL 50-1424.

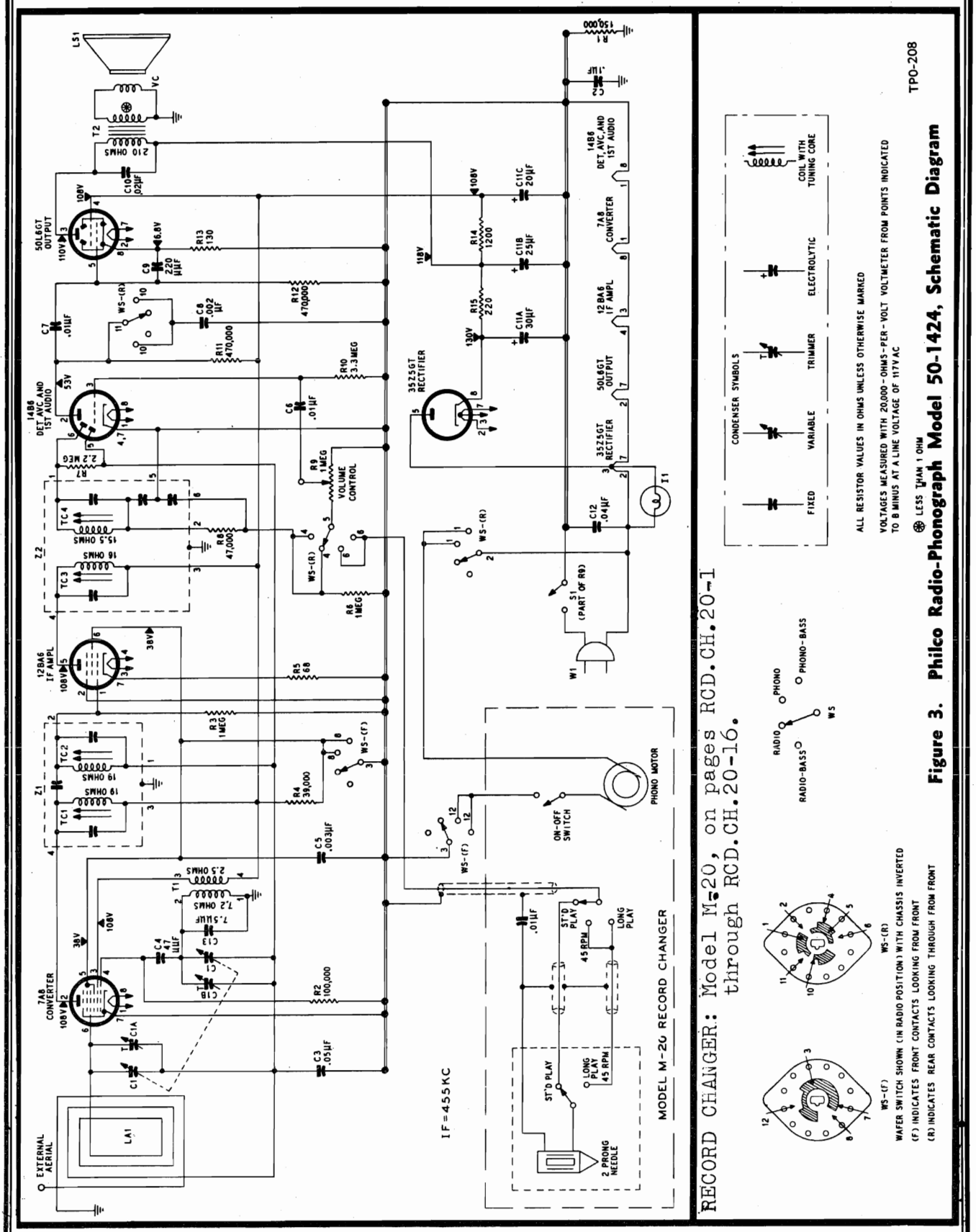

RECORD CHANGER: Model M-20, on pages RCD.CH.20-1 through RCD.CH.20-16.

Figure 3. Philco Radio-Phonograph Model 50-1424, Schematic Diagram

© John F. Rider

Compliments of www.nucow.com

MODEL 50-1424

ALIGNMENT PROCEDURE

DIAL POINTER—Turn tuning condenser to full-mesh position. Set dial pointer to the index mark, located to the left of "55".

CONTROLS—Turn on power, and set volume control to maximum.

OUTPUT METER—Connect across voice-coil terminals.

SIGNAL GENERATOR—Connect as indicated in chart.

OUTPUT LEVEL—During alignment, adjust signal-generator output to hold output-meter indication below 1.25 volts.

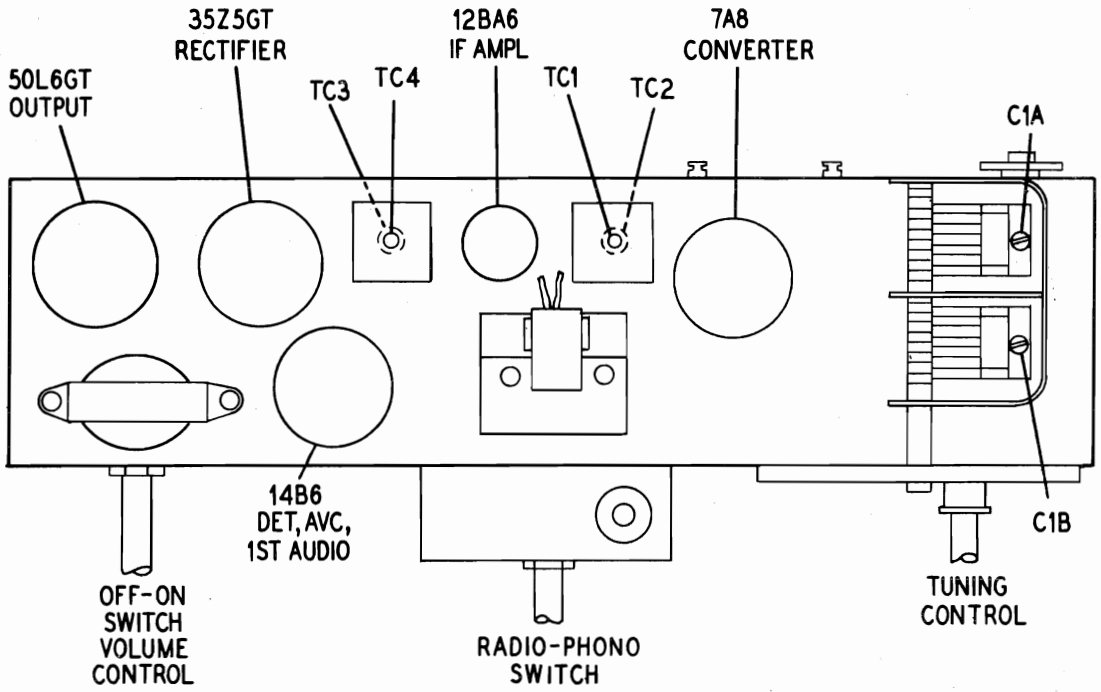

TP0-209

Figure 4. Top View, Showing Trimmer Locations

STEP	SIGNAL GENERATOR		RADIO		ADJUST
	CONNECTION TO RADIO	DIAL SETTING	DIAL SETTING	SPECIAL INSTRUCTIONS	
1	Ground lead to B-; output lead through .1-μf. condenser to pin 6 of 7A8 tube.	455 kc.	540 kc. (gang fully meshed).	Adjust tuning cores, in order given, for maximum output.	TC4—2nd i-f sec. TC3—2nd i-f pri. TC2—1st i-f sec. TC1—1st i-f pri.
2	Radiating loop (see note below).	1600 kc.	1600 kc.	Adjust for maximum.	C1B—osc.
3	Same as step 2.	1500 kc.	1500 kc.	Adjust for maximum.	C1A—aerial

RADIATING LOOP: Make up a 6-to-8 turn, 6-inch-diameter loop from insulated wire; connect to signal-generator output leads, and place near radio loop aerial.

© John F. Rider

Compliments of www.nucow.com

MODEL 50-1718

SPECIFICATIONS

CABINET	Wood console, mahogany finish
CIRCUIT	6-tube superheterodyne (with t-r-f stage)
FREQUENCY RANGE	540—1620 kc.
AUDIO OUTPUT	3 watts
OPERATING VOLTAGE	105—120 volts, 60 cycles, a.c.
POWER CONSUMPTION	
Radio	50 watts
Phonograph	65 watts, total
INTERMEDIATE FREQUENCY	455 kc.
AERIAL	Built-in low-impedance loop; provision for external aerial
PHILCO TUBES (6)	7B7 r-f ampl., 7B7 i-f ampl., 7A8 converter, 14B6 det.-a.v.c.-1st audio ampl., 35L6GT output, 50Y6GT rectifier
PHONOGRAPH	Philco Model M-20 All-Speed Automatic Record Changer. (For service information, refer to Service Manual PR-1731.)

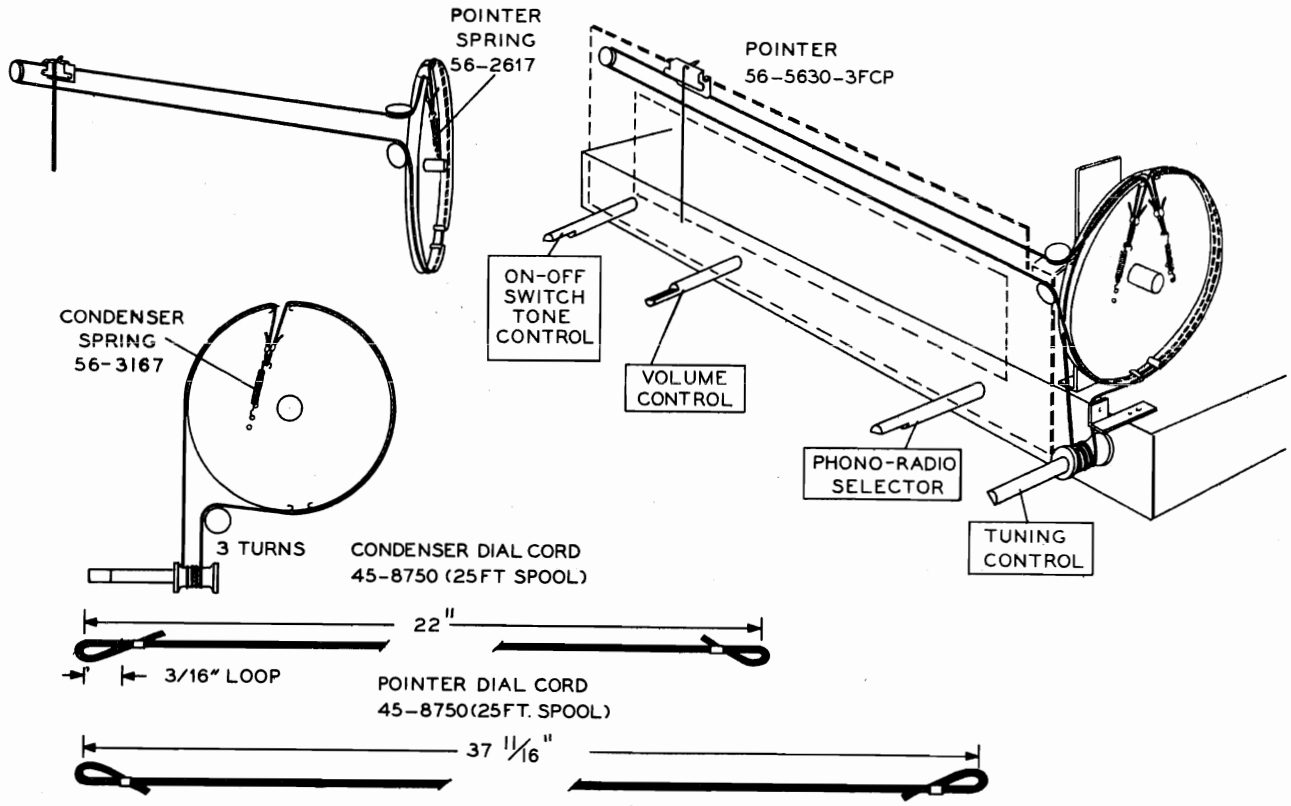

TPO-210

Figure 1. Drive-Cord Installation Details

©John F. Rider

Compliments of www.nucow.com

MODEL 50-1718

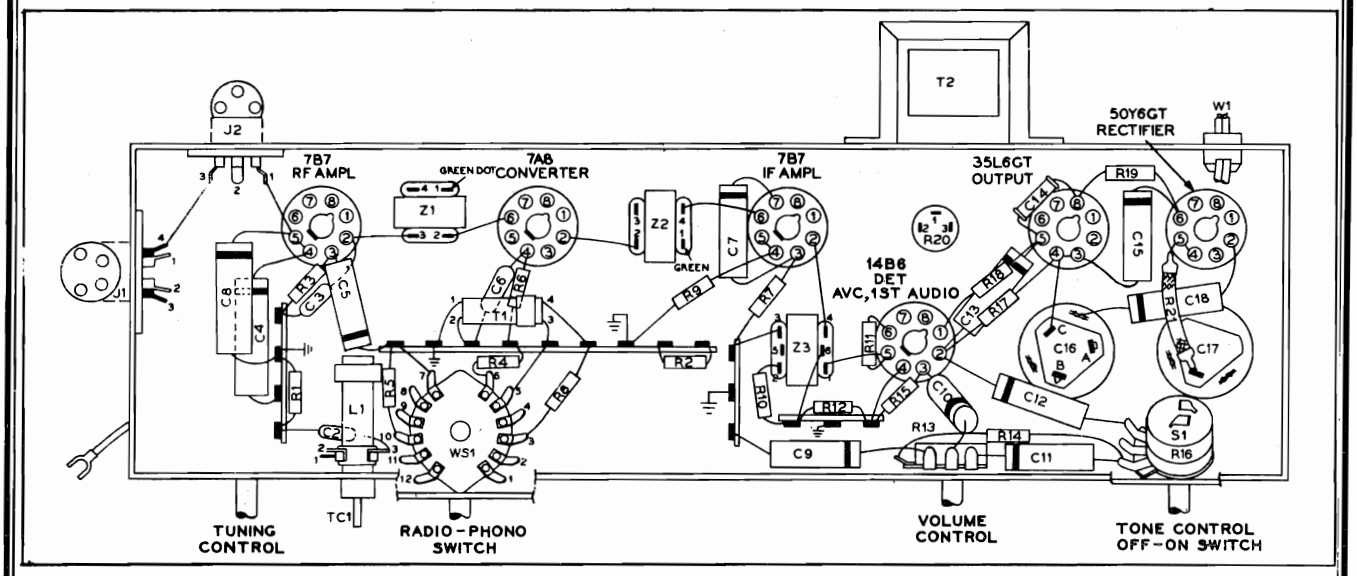

TPO-211

Figure 2. Symbolized Chassis, Showing Parts Placement

REPLACEMENT PARTS LIST

Reference Symbol	Description	Service Part No.
C1	Condenser, tuning gang, 3-section	31-2748-2
C1A	Condenser, aerial trimmer	Part of C1
C1B	Condenser, r-f trimmer	Part of C1
C1C	Condenser, oscillator trimmer	Part of C1
C2	Condenser, aerial (external) coupling, 4.7 μμf.	30-1221-5*
C3	Condenser, fixed trimmer, 15 μμf.	60-00155407*
C4	Condenser, a-v-c filter, .05 μf.	61-0122*
C5	Condenser, screen by-pass, .01 μf.	61-0120*
C6	Condenser, d-c blocking, 47 μμf.	60-00475417*
C7	Condenser, screen by-pass, .05 μf.	61-0122*
C8	Condenser, by-pass, B− to ground, .1 μf.	61-0113*
C9	Condenser, d-c blocking, .006 μf.	45-3500-7*
C10	Condenser, d-c blocking, .01 μf.	61-0120*
C11	Condenser, tone compensation, .006 μf.	45-3500-7*
C12	Condenser, tone compensation, high-cut, .004 μf.	61-0179*
C13	Condenser, d-c blocking, .01 μf.	61-0120*
C14	Condenser, grid by-pass, 220 μμf.	62-122001001*
C15	Condenser, tone compensation, .01 μf.	61-0120*
C16	Condenser, electrolytic, 3-section	30-2568-38
C16A	Condenser, filter, 75 μf., 250v	Part of C16
C16B	Condenser, filter, 40 μf., 250v	Part of C16
C16C	Condenser, filter, 10 μf., 250v	Part of C16
C17	Condenser, electrolytic, voltage doubler, 20 μf., 150v	30-2568-22
C18	Condenser, line by-pass, .05 μf.	61-0122*
C19	Condenser, d-c blocking, phono coupling, .01 μf.	61-0120*
I1	Pilot lamp, 110 volts, 7 watts	34-2605
J1	Socket, aerial input and speaker	27-6214-1
J2	Socket, phono input	27-6126*
L1	Coil, aerial	32-4413-1
LA1	Loop aerial	32-4394-8
LS1	Speaker, 8-inch, p-m	36-1626-1
P1	Cable-and-plug assembly, speaker and loop	41-3948-1
R1	Resistor, aerial isolating, 150,000 ohms	66-4158340*
R2	Resistor, a-v-c filter, 2.2 megohms	66-5228340*
R3	Resistor, screen dropping, 120,000 ohms	66-4128340*
R4	Resistor, cathode bias (phono), 3900 ohms	66-2398340*
R5	Resistor, grid return, 120,000 ohms	66-4128340*
R6	Resistor, grid return (phono), 1 megohm	66-5108340*
R7	Resistor, dropping, 22,000 ohms	66-3228340*
R8	Resistor, plate load (phono), 120,000 ohms	66-4128340*
R9	Resistor, leakage, 150,000 ohms	66-4158340*
R10	Resistor, i-f filter, 47,000 ohms	66-3478340*
R11	Resistor, a-v-c diode load, 2.2 megohms	66-5228340*
R12	Resistor, diode load, 470,000 ohms	66-4478340*
R13	Volume control, 2 megohms, tapped at 1 megohm	33-5535-29
R14	Resistor, tone compensation, 68,000 ohms	66-3688340*
R15	Resistor, grid return, 10 megohms	66-6108340*
R16	Tone control (with off-on switch), 5 megohms	33-5566-19
R17	Resistor, plate load, 470,000 ohms	66-4478340*
R18	Resistor, grid return, 470,000 ohms	66-4478340*
R19	Resistor, cathode bias, 150 ohms	66-1154340*
R20	Resistor, 2-section, wire-wound	33-3445-1
R20A	Resistor, filter, 200 ohms 2 watts	Part of R20
R20B	Resistor, filter, 9200 ohms, 4 watts	Part of R20
R21	Resistor, current limiting, 25 ohms	33-13334-5
S1	Switch, off-on	Part of R16
T1	Transformer, oscillator	32-4263
T2	Transformer, output	32-8242-3*
W1	Line cord	L-2183*
WS1	Switch, wafer, radio-phono	42-1926
Z1	Transformer, r-f	32-4399-2A
Z2	Transformer, 1st i-f	32-4160A
Z3	Transformer, 2nd i-f	32-4240A

MISCELLANEOUS

Description	Service Part No.
Aerial lead assembly	76-1472-1
Cabinet	10713-2
Back	54-7603
Baffle and cloth	40-7512-1
Baffle, wood	219-119
Bezel and scale	54-5088
Bin mechanism, l.h.	76-3223-5
Bin mechanism, r.h.	76-3223-6
Dome (4)	45-6190
Door pull	56-7246
Frame, changer mounting	76-4104
Hinge (2)	56-5765
Dial Backplate Assembly	76-5723
Bracket-and-pulley assembly	76-4003
Bumper, rubber (2)	54-4181
Diffusing panel	54-7606-1

© John F. Rider

Compliments of www.nucow.com

MODEL 50-1718

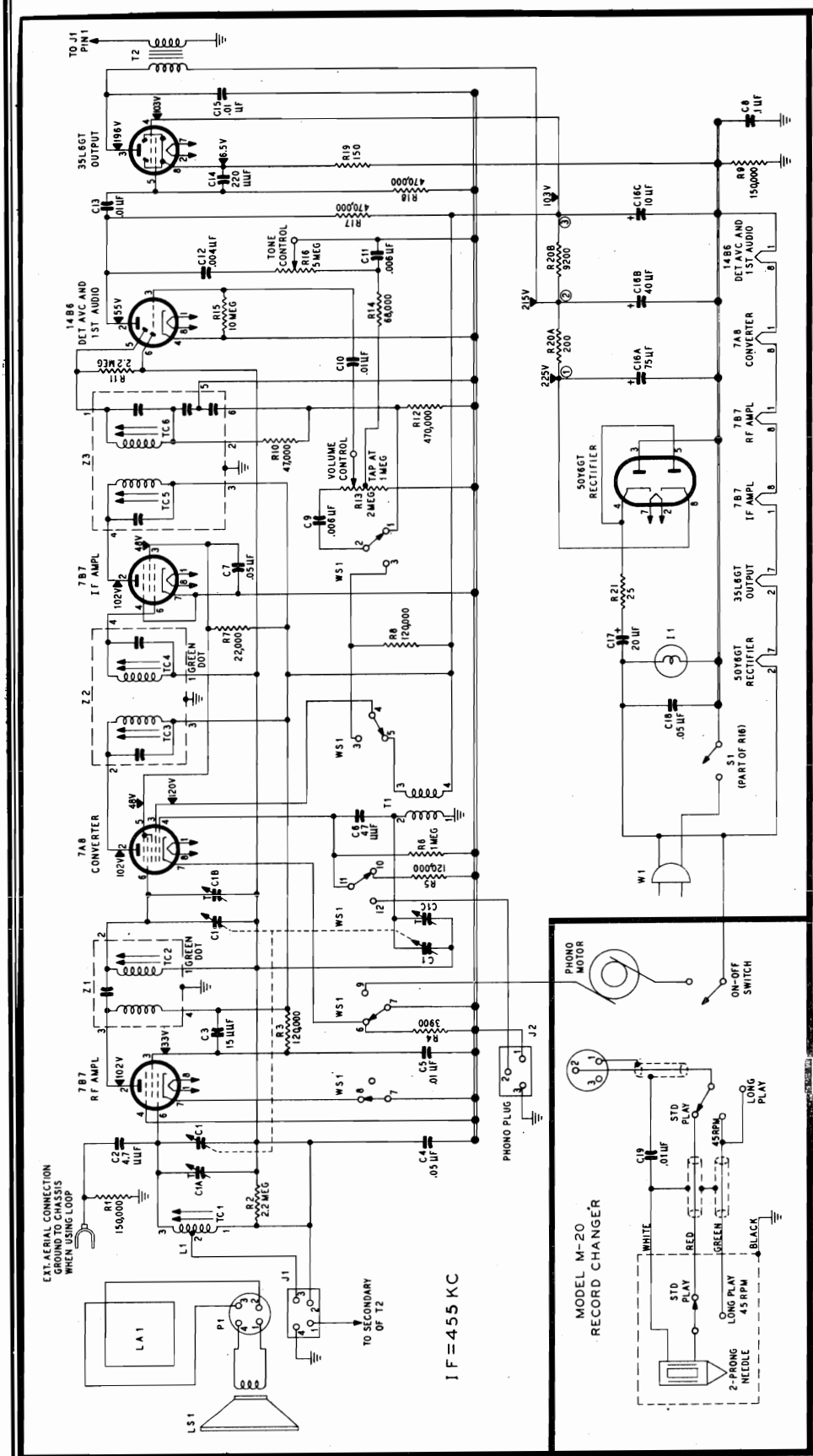

TPO-212

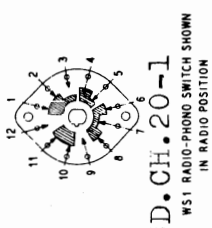

VOLTAGES MEASURED WITH A 20,000-OHMS-PER-VOLT VOLTMETER FROM POINTS INDICATED TO B MINUS AT A LINE VOLTAGE OF 117 V AC

RECORD CHANGER: Model M-20, on pages RCD.CH.20-1 through RCD.CH.20-16.

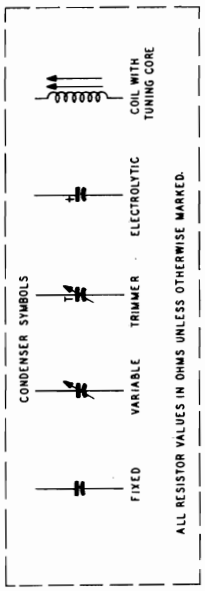

Figure 3. Philco Radio-Phonograph Model 50-1718, Schematic Diagram

©John F. Rider

Compliments of www.nucow.com

ALIGNMENT PROCEDURE

DIAL POINTER—With tuning gang fully meshed, set pointer to coincide with the first scribe mark from the left on the dial backplate.

RADIO CONTROLS—Set volume control to maximum, tone control fully counterclockwise, and RADIO-PHONO switch to RADIO position.

OUTPUT METER—Connect across voice-coil terminals.

SIGNAL GENERATOR—Connect ground lead to B−. Connect output lead as indicated in chart. Use modulated output.

OUTPUT LEVEL—During alignment, attenuate input signal to maintain an output-meter indication of 1.25 volts.

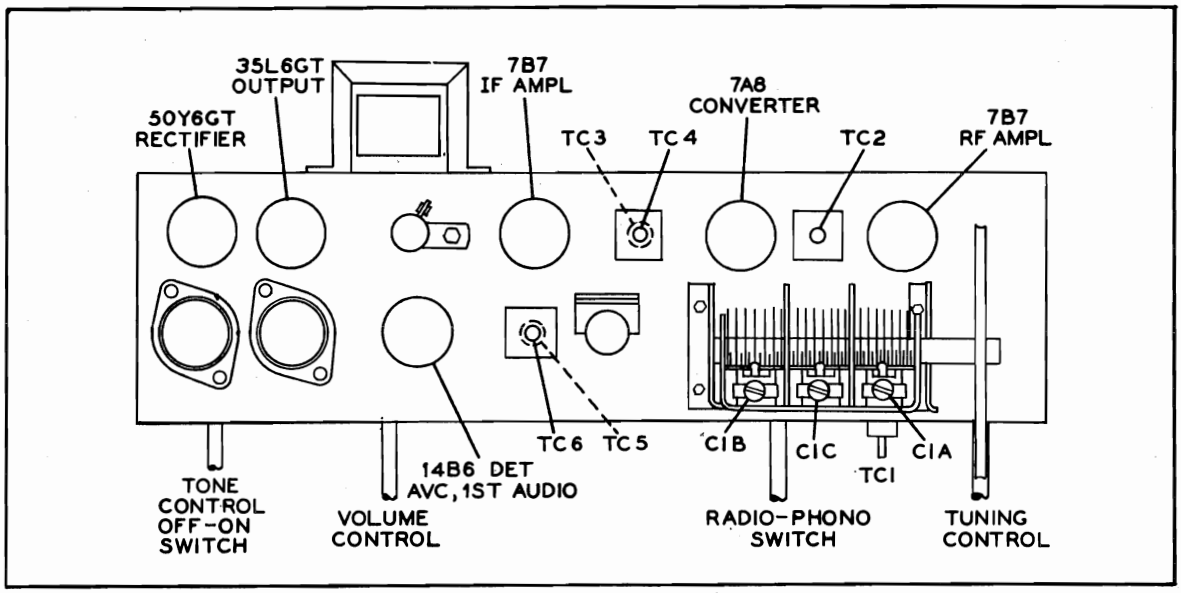

TPO-213

Figure 4. Top View, Showing Trimmer Locations

STEP	SIGNAL GENERATOR		RADIO		ADJUST
	CONNECTION TO RADIO	DIAL SETTING	DIAL SETTING	SPECIAL INSTRUCTIONS	
1	Through a .1-uf. condenser to r-f-ampl. section of C1.	455 kc.	Gang fully meshed.	Adjust, in order given, for maximum output.	TC6—2nd i-f sec. TC5—2nd i-f pri. TC4—1st i-f sec. TC3—1st i-f pri.
2	Radiating loop (see note below).	1620 kc.	1620 kc.	Adjust for maximum.	C1C—osc. trimmer
3	Same as Step 2.	1500 kc.	1500 kc.	Adjust for maximum.	C1B—r-f trimmer C1A—ant. trimmer
4	Same as Step 2.	580 kc.	580 kc.	Adjust for maximum while rocking tuning control.	TC2—r-f core TC1—ant. core*

RADIATING LOOP: Make up a 6-to-8-turn, 6-inch diameter loop of insulated wire; connect to signal-generator output leads, and place near radio loop.

* The aerial tuning core, TC1, should not be adjusted unless the coil has been replaced.

REPLACEMENT PARTS LIST (Continued)

MISCELLANEOUS (Continued)

Description	Service Part No.
Fastener, snap	28-4342FA3
Spring (2)	56-3841
Drive cord, 25-foot spool	45-8750
Pointer	56-5630-3FCP
Spring, pointer drive	56-2617
Fish paper	27-9111
Knob (1)	54-4718-12
Knob (3)	54-4718-6
Mount, rubber, gang mounting (4)	27-4771-1
Pilot-lamp bracket-and-clip assembly	76-5722
Pilot-lamp-socket assembly	27-6233-53
Shaft-and-pulley assembly, drive	76-3959-3

MISCELLANEOUS (Continued)

Description	Service Part No.
Bushing	27-9437
Spring, hairpin (2)	57-1468FA1
Spring, hairpin	57-0985FA1
Sleeve, changer mounting (3)	54-7798
Socket, Loktal (4)	27-6207
Soctal, octal (2)	27-6174
Speed nut, changer mounting (3)	W-2554FCP
Spring, changer mounting, heavy (3)	56-7059FA9
Spring, changer mounting, light (3)	56-7059-1FJ47
Spring, gang drive	56-3167
Wafer, electrolytic mtg. (2)	27-9508

© John F. Rider

Compliments of www.nucow.com

MODEL 50-1727

MODEL 50-1727

SPECIFICATIONS

CABINET ..... Wood console, mahogany finish, Georgian style

CIRCUIT ..... 11-tube superheterodyne

FREQUENCY RANGES
- Broadcast ..... 540—1620 kc.
- FM ..... 88—108 mc.

AUDIO OUTPUT ..... 10 watts

PUSH BUTTONS ..... Six: Five for broadcast stations, one for power on-off

OPERATING VOLTAGE .. 105—125 volts, 60 cycles, a.c.

POWER CONSUMPTION
- Radio ..... 110 watts
- Phonograph ..... 125 watts

AERIALS ..... Low-impedance broadcast loop; FM line-cord aerial; provision for external aerial

INTERMEDIATE FREQUENCIES
- AM ..... 455 kc.
- FM ..... 9.1 mc.

PHONOGRAPH ..... Philco Automatic Record Changer, Model M-20 (for service information, refer to service manual PR-1731).

PHILCO TUBES (11) .... 6AU6, 7F8, 6BJ6(2), 6T8, 7A4, 6V6GT(2), 7E7, 7F7, 5U4G

TP-6098

CIRCUIT DESCRIPTION

Philco Radio-Phonograph Model 50-1727 consists of an 11-tube superheterodyne and a Model M-20 Philco Automatic Record Changer.

A low-impedance loop aerial within the cabinet normally provides adequate signal pickup on the standard broadcast band. In most localities, the built-in FM line-cord aerial provides satisfactory FM reception. In areas where FM signals are weak, an outdoor dipole aerial, such as Philco Part No. 45-1462, will provide additional pickup. To increase the pickup on both bands, use the Philco Aerial Coupler, Part No. 76-2353-1, with the outdoor dipole aerial. For increased signal pickup on the standard broadcast band only, use the coupler with an external aerial of the single-wire type, such as Philco Part No. 45-1494.

The r-f stage (FM only), the converter, and the 1st i-f amplifier are mounted on a separate chassis for improved operation at high frequencies. A 6AU6 high-frequency pentode is used as the FM r-f amplifier. A 7F8 high-frequency dual triode is employed as the converter. There are two transformer-coupled i-f stages using 6BJ6 high-frequency pentodes. Each i-f stage has a double set of transformers; one is tuned to 9.1 mc., the FM intermediate frequency, and the other is tuned to 455 kc., the AM intermediate frequency. The use of individual transformers for FM and AM gives better stability and allows more complete shielding. In FM operation, the primary and secondary of the first AM i-f transformer are shorted out, to attenuate undesirable beat frequencies; switching of other windings is unnecessary.

The multi-purpose 6T8 provides AM and FM detection and functions as the first audio amplifier. Two diodes of this tube operate in a ratio detector circuit.

©John F. Rider

Compliments of www.nucow.com

The other diode acts as the AM detector and also supplies the a-v-c voltage. The triode section is the first audio amplifier for both radio and phono operation.

A 7A4 triode operates as a plate-and-cathode-loaded phase inverter, driving a pair of 6V6GT's in the push-pull output stage. Tone fidelity is obtained by the use of inverse feedback in the audio system. This feedback voltage is taken from the secondary of the output transformer and returned to the low side of the volume control.

Selective tone compensation is provided by a continuously variable bass booster and a five-step treble switch that ranges from Scratch Eliminator "on" through maximum high-cut to Hi Fidelity.

The Philco Electronic Scratch Eliminator, for phono operation, may be switched on or off, as required. In this circuit, the reactance tube (pentode section of a 7E7) functions as a variable shunt capacitance at the phono-input circuit; at low signal levels, this tube bypasses a controlled portion of the higher audio frequencies to ground. The grid bias of the reactance tube controls its effective capacitance, which becomes maximum with low bias and minimum with high bias. This control bias is developed by the audio signal itself; a proportionate amount of the signal is taken from the pickup output, amplified by each triode section of the 7F7, and rectified by the diode section of the 7E7.

PHILCO TROUBLE SHOOTING PROCEDURE

For rapid trouble shooting, the radio circuit is divided into four sections, as follows:

Section 1—the power supply
Section 2—the audio circuits
Section 3—the i-f, detector, and a-v-c circuits
Section 4—the r-f and converter circuits

Test points are specified for each section, and are indicated in the sectionalized schematic diagram. The trouble-shooting procedure given for each section includes a simplified test chart and a bottom view of the chassis showing the locations of the test points and the components of that section.

In each chart, the first step is a master check for determining whether trouble exists in that section without going through the entire test procedure.

Failure to obtain the "NORMAL INDICATION" in any given step indicates trouble within the circuit under test.

After isolating the trouble to a single stage, the defect is located by: first, testing the tube; second, measuring tube electrode voltages; third, measuring circuit resistances; fourth, substituting condensers. The trouble revealed should be corrected before testing further.

IMPORTANT!

To avoid altering FM operation, special care should be used in replacing any part. Replacement parts should be placed in the same physical positions as the original parts; connections should be of the same length, and should be soldered to the same points. The placement or length of leads should not be changed.

PRELIMINARY CHECKS

To avoid possible damage to the radio, the following preliminary checks should be made before it is turned on:

1. Inspect both the top and the bottom of the chassis. Make sure that all tubes are secure in the proper sockets, and look for any broken or shorted connections, burned resistors, or other obvious indications of trouble.

2. Measure the resistance between B+ (pin 2 of the 5U4G rectifier tube) and the radio chassis. When the ohmmeter test leads are connected in the proper polarity, the highest resistance reading will be obtained. If the reading is lower than 1400 ohms, check condensers C102, C103B, C318, C314, and C406 for leakage or shorts.

The resistance value given is much lower than normal, and is not intended as a quality check of these condensers; the value given is the lowest at which the rectifier will operate safely while the voltage checks of Section 1 (power supply) are performed.

©John F. Rider

Compliments of www.nucow.com

MODEL 50-1727

TROUBLE SHOOTING

Section 1. POWER SUPPLY

CAUTION: Do not turn on the power with the speaker disconnected, as this may cause damage to the set.

For the tests in this section, use a d-c voltmeter, connecting the leads between the chassis, test point C, and the test points indicated in the chart. The voltage readings given were taken with a 20,000-ohms-per-volt meter at a line voltage of 117 volts, a.c.

Turn on the power, and set the volume control to minimum. Turn the bass control fully counterclockwise, and set the treble selector switch to the left-hand TREBLE position. Set the band switch to the broadcast position.

If the "NORMAL INDICATION" is obtained in step 1, proceed with the tests for Section 2 (audio circuits); if not, isolate and correct the trouble in this section.

STEP	TEST POINT	NORMAL INDICATION	ABNORMAL INDICATION	POSSIBLE CAUSE OF ABNORMAL INDICATION
1	A	230v		Trouble in this section. Isolate by the following tests.
2	B	300v	No voltage	Defective: 5U4G. Open: T100, PB100, W100. Shorted: C100, C101.
			Low voltage	Defective: 5U4G. Open: C102, L100. Shorted: C103B, C311*, C307*. Leaky: C102.
			High voltage	Open: T200*, R103. Shorted: L100.
3	A	230v	No voltage	Open: R100. Shorted: C103A, C303*
			Low voltage	Leaky: C103A, C303*. Increased resistance: R100.
			High voltage	Open: T200*.
4	D	−16v	No voltage	Open: R101. Shorted: C210*.
			Low voltage	Leaky: C210*.
			High voltage	Open: R102.
Listening Test: Abnormal hum and instability may be caused by open C102, C103A, or C103B.				

* This part, located in another section, may cause abnormal indication in this section.

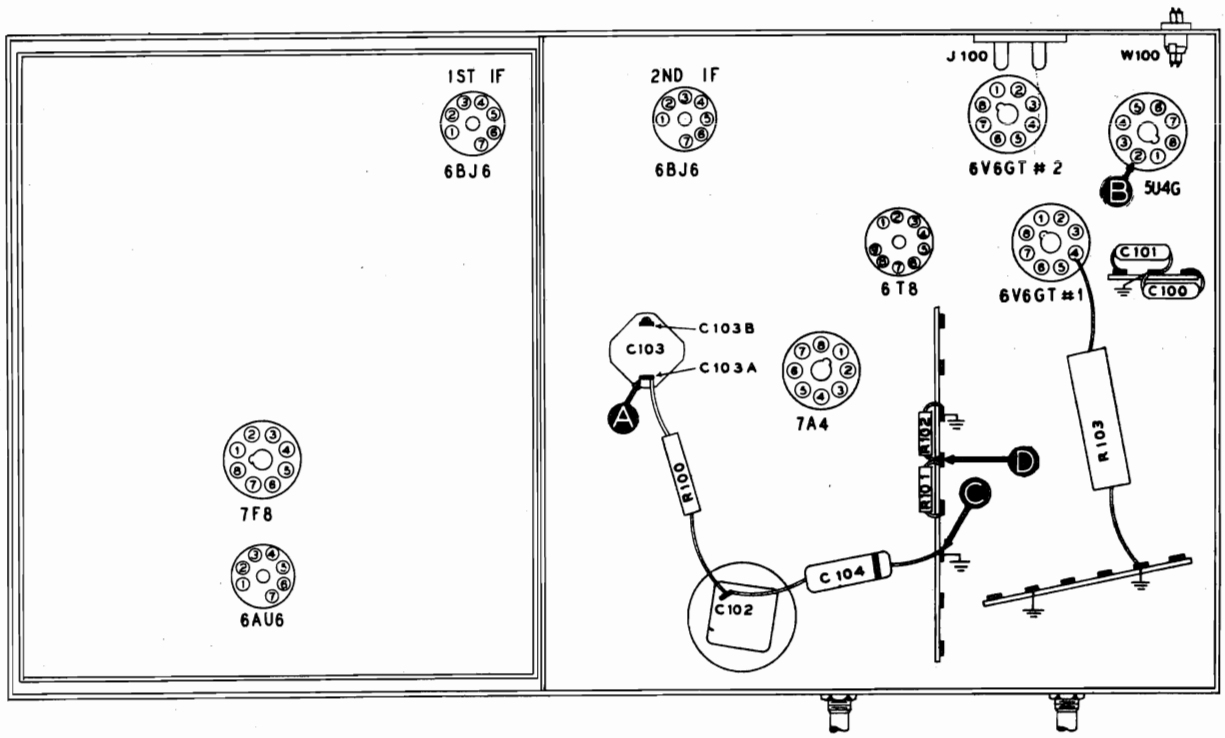

FIGURE 1. BOTTOM VIEW, SHOWING SECTION 1 TEST POINTS

TP-7673A-1

© John F. Rider

Compliments of www.nucow.com

TROUBLE SHOOTING

Section 2. AUDIO CIRCUITS

AUDIO-AMPLIFIER TESTS

For the tests in this section, use an audio-frequency signal generator. Connect the generator ground lead to the chassis, test point C; connect the output lead through a .1-mf. condenser to the test points indicated in the chart.

Set the volume control to maximum, and turn the bass control fully counterclockwise. Set the treble selector switch to the second TREBLE position. Set the band switch to the broadcast position unless otherwise noted in the chart.

If the "NORMAL INDICATION" is obtained in step 1, proceed with the tests for the scratch-eliminator circuits; if not, isolate and correct the trouble in the audio-amplifier circuits.

STEP	TEST POINT	NORMAL INDICATION	POSSIBLE CAUSE OF ABNORMAL INDICATION
1	A	Loud, clear speaker output with weak signal input.	Trouble in audio-amplifier circuits. Isolate by the following tests.
2	B (Remove 7A4)	Clear output with strong input.	Defective: 6V6GT (#1), LS200. Open: C208, R213, T200. Shorted or leaky: C208, C210, C211.
3	D (7A4 removed)	Clear output with strong input.	Defective: 6V6GT (#2). Open: C209, R214. Shorted or leaky: C209.
4	E (Replace 7A4)	Loud, clear output with moderate input.	Defective: 7A4. Open: R209, R210, R211, R212. Shorted or leaky: C207.
5 (a)	F	Loud, clear output with weak input.	Defective: 6T8. Open: R208, C207, R207. Shorted or leaky: C206, C215, C320*.
5 (b)	F	Loud, clear output with weak input, for all 5 positions of treble selector switch.	Open: C212, C213, C214, C215, R215, R216, R217, WS2. Shorted or leaky: C212, C213, C214.
6 (a)	A	Loud, clear output with weak input.	Open: C203, C205, R204, R200 (rotate through range).
6 (b)	A	Loud, clear output with weak input, for any position of bass control.	Open: R203, R202, C202. Shorted: C202.
7	G (Band switch in Phono position)	Loud, clear output with weak input.	Open: WS1-3 (F), R220. Shorted: shield cable.
Listening Test: Abnormal hum and distortion may be caused by leaky C207, C208, C209, or by open C206 or C210.			

* This part, located in another section, may cause abnormal indication in this section.

SCRATCH-ELIMINATOR TESTS

Set the bass control fully counterclockwise. Turn the treble selector switch to the high-fidelity position, maximum clockwise. Set the band switch to the phono position. For all steps except 1(b), set the volume control to maximum; for this step, adjust the volume control as directed in the chart.

Turn the scratch eliminator on or off as indicated in the chart. (The scratch eliminator is on when the treble selector switch is in the counterclockwise position.)

Connect an output meter across the primary of the output transformer, T200.

IMPORTANT! For all steps except step 4, use the 0—10-volt output-meter range; for step 4 only, use the 0—50-volt range. If the proper ranges are not used, erroneous readings will result.

Connect the ground lead of an audio signal generator to the chassis, test point C, and connect the output lead through a .1-mf. condenser to the test points indicated in the chart. Set the generator for 5000 cycles. Adjust the generator output as directed in the chart.

If normal operation is indicated by the tests in step 1, (a) and (b), proceed with the tests for Section 3 (i-f, detector, and a-v-c circuits); if not, isolate and correct the trouble in the scratch-eliminator circuits.

NOTE: For steps 2, 3, and 4, connect the positive lead of a 20,000-ohms-per-volt, d-c voltmeter to the chassis, test point C; connect the prod end of the negative lead through a 100,000-ohm isolating resistor to the "VOLTMETER" test points indicated in the chart.

© John F. Rider

Compliments of www.nucow.com

MODEL 50-1727

TROUBLE SHOOTING

Section 2. AUDIO CIRCUITS (Cont.)

SCRATCH-ELIMINATOR TESTS

STEP	TEST POINT	SIGNAL GEN. OUTPUT	VOLT-METER	SPECIAL INSTRUCTIONS	POSSIBLE CAUSE OF ABNORMAL INDICATION
1 (a)	G	Adjust for 10v output-meter reading, with scratch eliminator off.		Turn scratch eliminator on; output voltage should drop to 6.5v (approx.).	
1 (b)	G	Same as for 1 (a).		Reduce volume control to obtain output-meter reading of 1v. Increase generator output for output-meter reading of 10v. Turn scratch eliminator on; output voltage should not drop below 8.8v (approx.).	Trouble in scratch-eliminator circuits. Isolate by the following tests.
2	H	See SPECIAL INSTRUCTIONS.	J	With scratch eliminator on, increase generator output for voltmeter reading of 8.8v, negative; failure to obtain this value indicates trouble.	Defective: 7F7, 7E7 (diode section), WS1-4 (R). Open: R229, R227, R231, R234, C223, WS2 (F).
3	H	Same setting which produced 8.8v reading in step 2, with scratch eliminator on.	K	With scratch eliminator on, voltage at point K should be 2v, negative.	Open: R226, R225, R224. Shorted: C219, C220, C217.
4	G	Same as step 2.	J	With scratch eliminator on, voltage at point J should be approx. 28v negative.	Defective: 7F7. Open: C216, C222, R218, R219, R228. Shorted or leaky: C222.
5	G	Adjust for 10v output-meter reading, with scratch eliminator off.		Turn scratch eliminator on; output voltage should drop to 6.5v (approx.).	Defective: 7E7 (pentode section). Open: R221, R222, R223, C218, C217. Shorted: C218, C217.

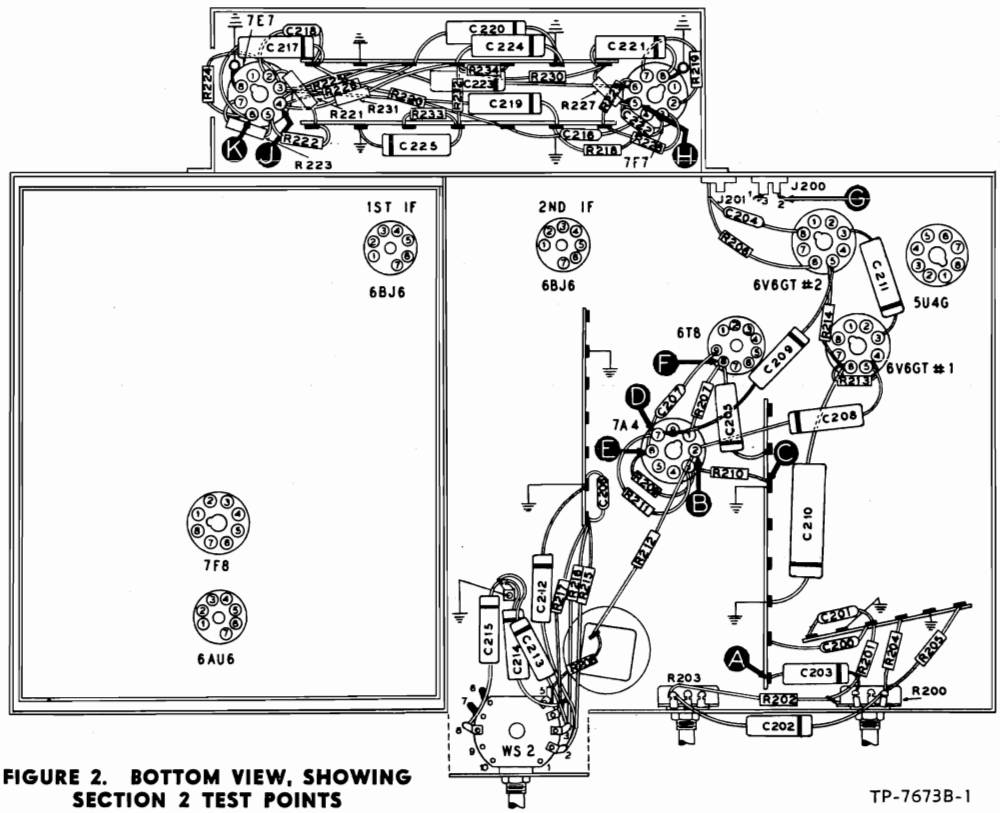

FIGURE 2. BOTTOM VIEW, SHOWING SECTION 2 TEST POINTS

TP-7673B-1

©John F. Rider

Compliments of www.nucow.com

TROUBLE SHOOTING

Section 3. I-F, DETECTOR, AND A-V-C CIRCUITS

AM TESTS

For the tests in this section, use an r-f signal generator, with modulated output, set at 455 kc. Connect the generator ground lead to the chassis, test point C; connect the output lead through a .1-mf. condenser to the test points indicated in the chart.

Set the volume control to maximum, and turn the bass control fully counterclockwise. Set the treble selector switch to the second TREBLE position. Set the band switch to the broadcast position, and rotate the tuning control until the tuning condenser is fully meshed.

If the "NORMAL INDICATION" is obtained in step 1, proceed with the FM tests; if not, isolate and correct the trouble in the AM circuits.

To provide a complete i-f-amplifier check, test point A for this section is placed at the grid of the mixer in Section 4; therefore, the effectiveness of step 1 as a master check is dependent upon the condition of certain parts in the mixer circuit. These parts are listed below under "POSSIBLE CAUSE OF ABNORMAL INDICATION."

STEP	TEST POINT	NORMAL INDICATION	POSSIBLE CAUSE OF ABNORMAL INDICATION
1	A	Loud, clear speaker output with weak signal input.	Trouble in AM i-f circuits. Isolate by the following tests.
2	B	Loud, clear output with strong input.	Defective: 6BJ6 (2nd i-f ampl.), 6T8. Misaligned: Z305. Open: R310, R311, R312, R313, R314, L304A, L305B, L302B, L303B, WS1-5. Shorted: L303B, L305A, L305B. Shorted or leaky: C316, C315, C317, C318, C305A, C305B, C305C, C305D.
3	D	Loud, clear output with moderate input.	Defective: 6BJ6 (1st i-f ampl.). Misaligned: Z303. Open: L300B, L301C, L302A, L302B, R303, R309, R305, R307, R308. Shorted: L303A. Shorted or leaky: C313, C312, C310, C314, C301B, C303A.
4	A	Loud, clear output with weak input.	Defective: 7F8*. Misaligned: Z301. Open: R405*, R300, R301, L300A, L301A, L301B. Shorted: L301A, L301B, L301C, WS1-5. Shorted or leaky: C410*, C411*, C409*. C301A, C301B, C306.
Listening Test: Abnormal hum may be caused by open: C306, C310, C312, C313, C314, C316, C317, C318.			

* This part, located in another section, may cause abnormal indication in this section.

FM CIRCUITS

Set the band switch to FM position, and follow the instructions preliminary to the AM tests with these exceptions; set the signal-generator frequency to 9.1 mc., and detune to one side or the other until a satisfactory test signal is obtained.

The most satisfactory check on the operation of the discriminator circuit is the ability of the circuit to take proper alignment. See ALIGNMENT OF FM CIRCUITS.

If the "NORMAL INDICATION" is obtained in step 1, proceed with the tests for Section 4 (r-f and converter circuits); if not, isolate and correct the trouble in the FM circuits.

Usually, if a part is found to operate satisfactorily for AM it will also operate satisfactorily for FM.

© John F. Rider

Compliments of www.nucow.com

MODEL 50-1727

TROUBLE SHOOTING

Section 3. I-F, DETECTOR, AND A-V-C CIRCUITS (Cont.)

FM TESTS

STEP	TEST POINT	NORMAL INDICATION	POSSIBLE CAUSE OF ABNORMAL INDICATION
1	A	Loud, clear speaker output with weak signal input.	Trouble in FM i-f circuits. Isolate by the following tests.
2	B	Loud, clear output with strong input.	Open: WS1-5, L304B, L304C, R315, C319, R316, R317, WS1-3. Shorted or leaky: C322, C323, C304A, C304B, C319, C321. Shorted: L304A, L304B. Misaligned: Z304.
3	D	Loud, clear output with moderate input.	Misaligned: Z302. Shorted: L302A, L302B, C302A, C302B. Open: R304, WS1-5.
4	A	Loud, clear output with weak input.	Misaligned: Z300. Shorted: L300A, L300B, C300A, C300B, C307, WS1-2. Open: WS1-2, WS1-5.

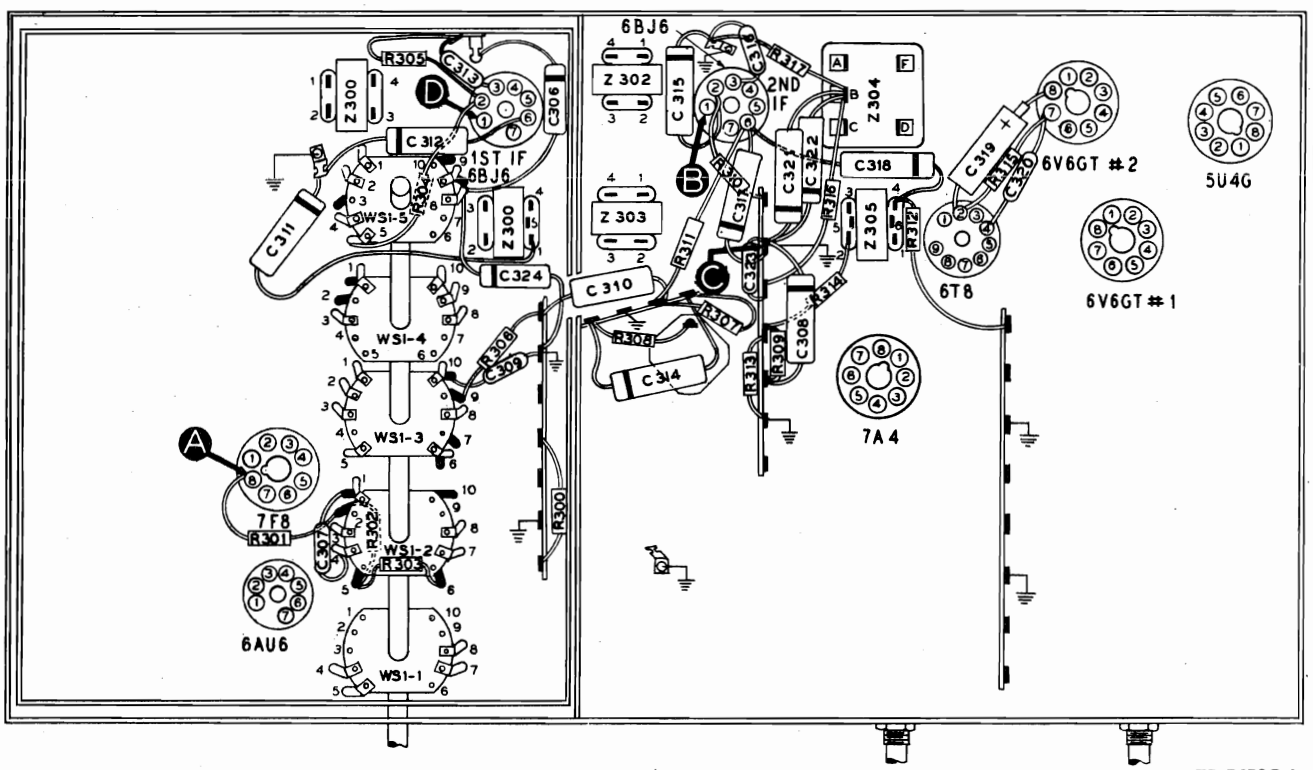

FIGURE 3. BOTTOM VIEW, SHOWING SECTION 3 TEST POINTS

TP-7673C-1

© John F. Rider

Compliments of www.nucow.com

TROUBLE SHOOTING

Section 4. R-F AND CONVERTER CIRCUITS

For the tests in this section, with the exception of the oscillator test, use an r-f signal generator with modulated output. Connect the generator ground lead to the chassis, test point C; connect the output lead through a .1-mf. condenser to the test points indicated in the chart.

Set the volume control to maximum, and turn the bass control fully counterclockwise. Set the treble selector switch to the second TREBLE position. Set the band switch, tuning control, and signal-generator frequency as indicated in the chart.

If the "NORMAL INDICATION" is not obtained in step 1 of each chart, isolate and correct the trouble in this section. If the trouble is not revealed by the tests for this section, check the alignment.

OSCILLATOR TESTS: For the oscillator tests (steps 2 and 4 of the AM test chart, and step 2 of the FM test chart), connect the positive lead of a high-resistance voltmeter to the oscillator cathode, pin 4 of the 7F8 tube (test point D). Connect the prod end of the negative lead through a 100,000-ohm isolating resistor to the oscillator grid, pin 1 of the 7F8 tube (test point B). Use a suitable meter range, such as 0—10 volts. Proper operation of the oscillator is indicated by negative voltages of approximately the values given in the chart (measured with 20,000-ohms-per-volt meter) throughout the tuning ranges of the broadcast and FM bands.

AM TESTS

STEP	TEST POINT	SIGNAL GEN. FREQ.	BAND SWITCH	RADIO TUNING	NORMAL INDICATION	POSSIBLE CAUSE OF ABNORMAL INDICATION
1 (a) 1 (b)	A A	1000 kc. Tune to frequency of each push-button.	BC Push-button	Tune to signal. Depress each button, in order.	Loud, clear speaker output with weak signal input.	Trouble in AM r-f circuits. Isolate by the following tests.
2 (Osc. Test.)	B to D		BC	Tune through range.	Negative 2—5 volts.	Defective: 7F8. Open: R404, T401, L405, C412, L404, R306*, WS1-3, WS1-4. Shorted: C412, C400, C417B, C407.
3	A	1000 kc.	BC	Tune to signal.	Loud, clear output with weak input.	Open: T400, WS1-2, C413. Shorted: C400, C417A.
4 (Osc. Test.)	B to D		Push-button	Depress each button, in order.	Negative 2—5 volts.	Open: L406, PB400, R406, WS1-3, WS1-4. Shorted: C414, C415.
5	A	Tune to frequency of each push-button.	Push-button	Depress each button, in order.	Loud, clear output with weak input.	Open: WS1-2, PB400. Shorted: C416.
Listening Test: Distortion may be caused by open R301*, R302*, or R309* Hum and distortion may be caused by open C308* or C310*.						

* This part, located in another section, may cause abnormal indication in this section.

FM TESTS

STEP	TEST POINT	SIGNAL GEN. FREQ.	BAND SWITCH	RADIO TUNING	NORMAL INDICATION	POSSIBLE CAUSE OF ABNORMAL INDICATION
1	E	95 mc.	FM	Tune to signal.	Loud, clear speaker output with weak signal input.	Trouble in FM r-f circuits. Isolate by the following tests.
2 (Osc. Test.)	B to D		FM	Tune through range.	Negative 1—1.5 volts.	Defective: 7F8. Open: L402, WS1-3, WS1-4. Shorted: C400, C400C, C309*. Shorted or leaky: C407, C409.
3	E	95 mc.	FM	Tune to signal.	Loud, clear output with weak input.	Defective: 6AU6. Open: L400, C401, R400, R401, R402, R403, L403, C405, L401. Shorted: C400, C400A, L400, L401, WS1-2, C400B. Shorted or leaky: C402, C404, C403, C405, C406.
Listening Test: Hum and distortion may be caused by open C402, C406, C408, C409.						

* This part, located in another section, may cause abnormal indication in this section.

© John F. Rider

Compliments of www.nucow.com

MODEL 50-1727

TROUBLE SHOOTING

Section 4. R-F AND CONVERTER CIRCUITS (Cont.)

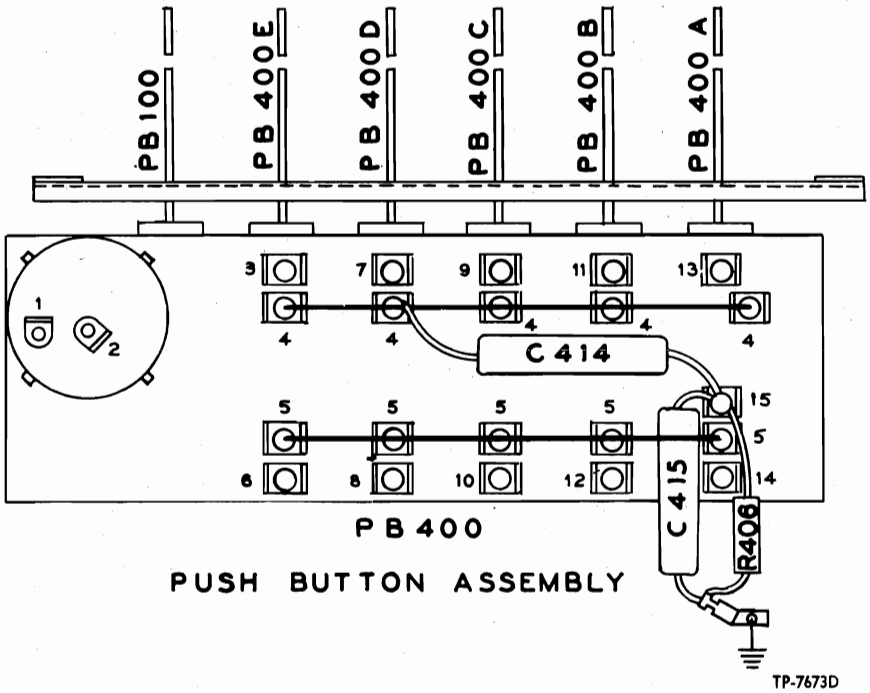

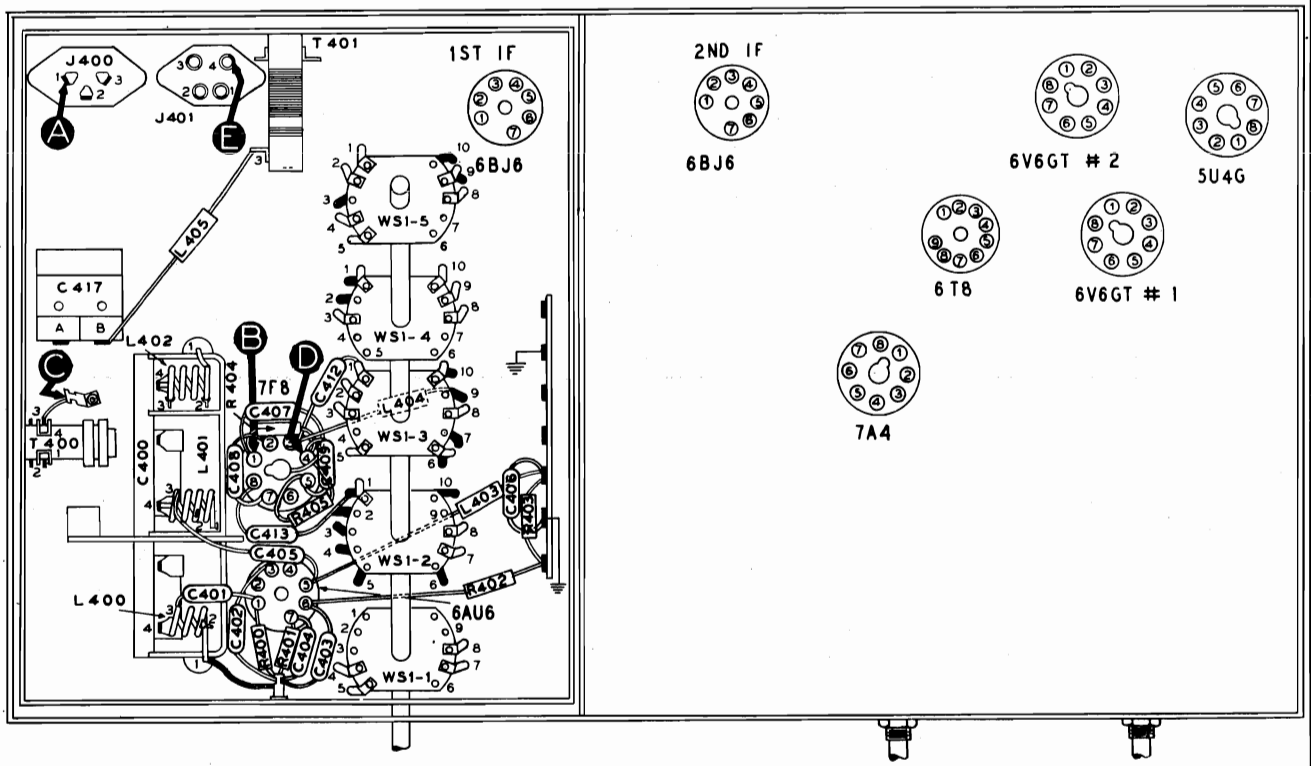

FIGURE 4. BOTTOM VIEW, SHOWING SECTION 4 TEST POINTS

© John F. Rider

Compliments of www.nucow.com

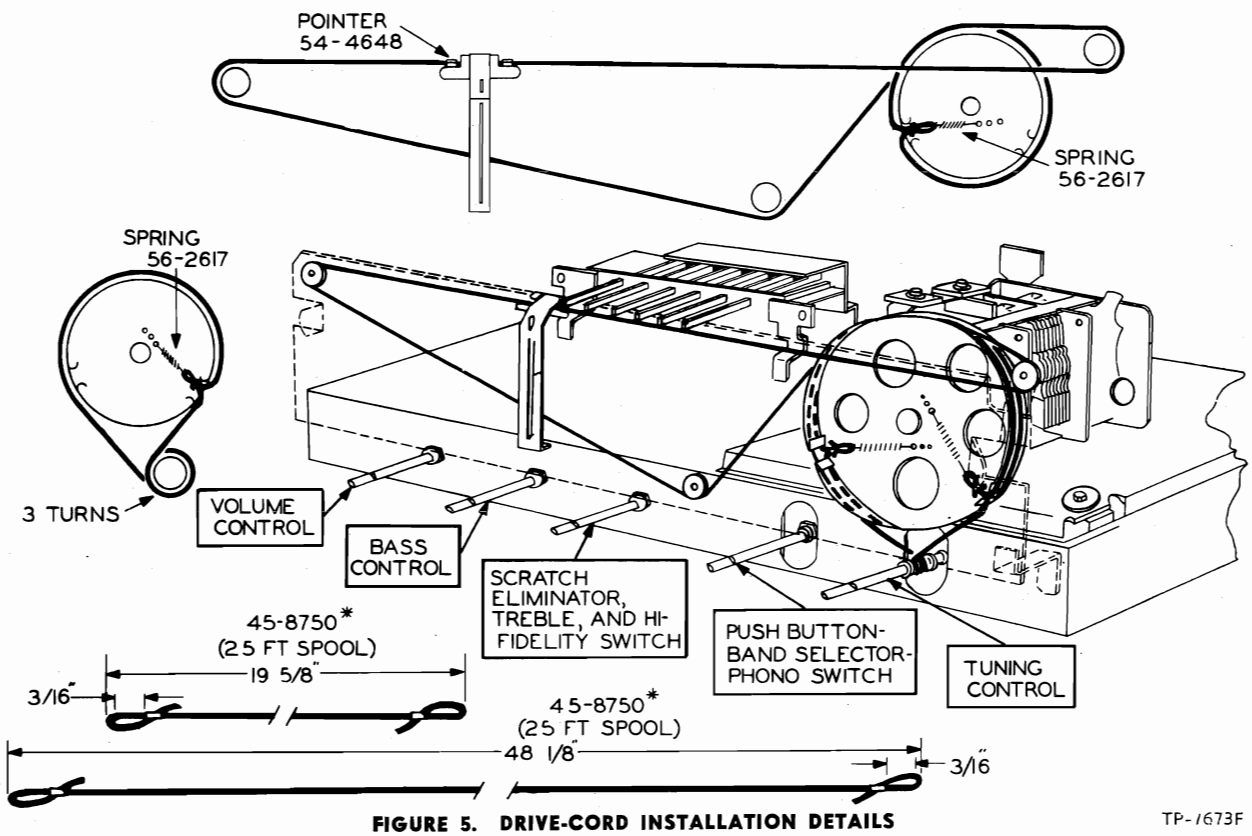

FIGURE 5. DRIVE-CORD INSTALLATION DETAILS

TP-1673F

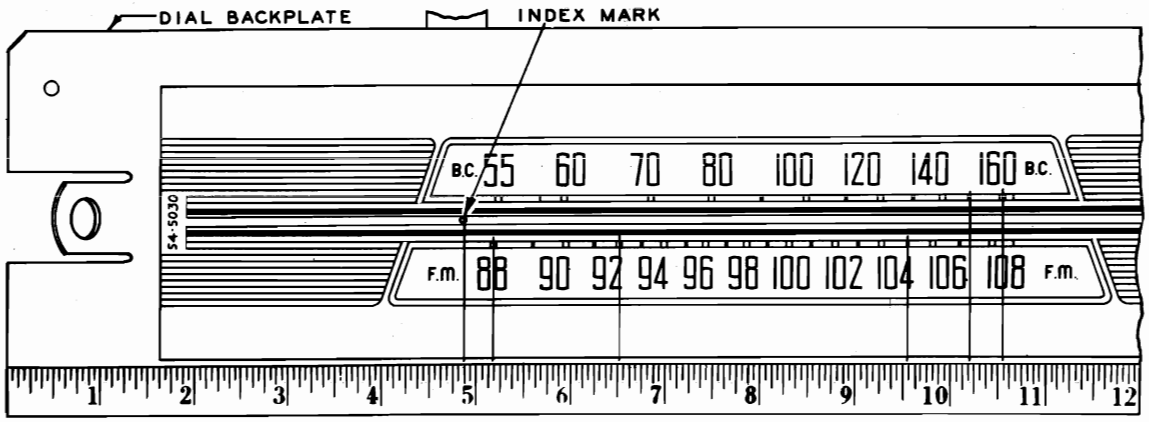

FIGURE 6. DIAL-BACKPLATE CALIBRATION MEASUREMENTS

TP-7088

CALIBRATING DIAL BACKPLATE

When the radio chassis has been removed from the cabinet, dial calibration and alignment points may be marked on the dial backplate below the pointer.

The method of measuring for these points is illustrated in figure 6. Hold a ruler against the scale backplate, with the start of the ruler at the left-hand edge of the backplate, and mark pencil dots at the proper points for the required frequency settings. When the ruler is correctly placed, the index mark is approximately 4-7/8" from the reference point indicated in figure 6.

With the tuning gang fully meshed, the pointer should be adjusted on the dial drive cord to coincide with the index mark.

After the chassis is installed in the cabinet, the tuning condenser should be fully meshed, and the dial pointer should be moved to coincide with the index mark on the dial.

©John F. Rider

Compliments of www.nucow.com

MODEL 50-1727

ALIGNMENT PROCEDURE

CAUTION: Do not turn on the power with the speaker disconnected, or the radio may be damaged.

ALIGNMENT OF AM CIRCUITS

When the complete AM and FM alignment is to be made, the AM alignment should be made first; however, if AM alignment is not required, the FM alignment alone may be made.

DIAL POINTER: With the tuning condensers fully meshed, the dial pointer must coincide with the index mark at the low-frequency end of the dial. See "CALIBRATING DIAL BACKPLATE" for the method of measuring the backplate for index and calibration points.

CONTROLS: Set the volume control to maximum, and the bass control fully counterclockwise. Set the treble selector switch fully clockwise. Set the band switch to the broadcast position. Set the signal-generator dial and radio dial as indicated in the chart.

OUTPUT METER: Connect between the No. 3 terminal (voice-coil connection) of the loop aerial socket, J400, and the chassis. See figure 8.

AM SIGNAL GENERATOR: Connect the ground lead to the chassis, and the output lead as indicated in the chart. Use modulated output.

OUTPUT LEVEL: During alignment, the signal-generator output must be attenuated to hold the radio output below 1.5 volts, as read on the output meter.

ALIGNMENT OF FM CIRCUITS

BEFORE STARTING ALIGNMENT, ALLOW THE RADIO AND SIGNAL GENERATOR TO WARM UP FOR 15 MINUTES.

CONTROLS: Set the volume control to maximum, and the bass control fully counterclockwise. Set the treble selector switch fully clockwise. Set the band switch to the FM position. Set the signal-generator dial and radio dial as indicated in the chart.

OUTPUT METER: Connect between the No. 3 terminal (voice-coil connection) of the loop aerial socket, J400, and the chassis. See figure 8.

AM SIGNAL GENERATOR: Connect the ground lead to the chassis; connect the output lead through a .1-mf. condenser to the points specified in the chart. Use modulated output.

OUTPUT LEVEL: During alignment, the signal-generator output must be attenuated to hold the radio output below 1.5 volts, as read on the output meter.

LOCATIONS OF COILS: For the locations of coils L400, L401, and L402 (steps 8, 9, and 10), refer to figure 4.

Note 1. Check the tracking of oscillator and r-f circuits with a tuning wand. If placing the brass end in or near the coil increases the output-meter reading, spread the turns; if the powdered-iron end increases the output reading, compress the turns. If both ends cause a decrease in the output, the coil is correctly tuned. Do not change the coils excessively, since only a small adjustment is required at these frequencies.

Note 2. Make two simple dipole aerials to feed the signals from the signal generator to the radio. Each dipole aerial may consist of two 30-inch lengths of rubber-covered wire. Connect one dipole aerial to terminals 3 and 4 on the FM aerial socket, J401, of the radio. See figure 8. Connect the other dipole aerial to the output leads of the signal generator. Place the two dipoles several feet apart.

Note 3. The use of a signal generator for steps 5 through 11 is recommended only if the available generator is sufficiently accurate to insure correct frequency settings. Otherwise, an alternative procedure employing FM broadcast-station signals is recommended. For the adjustments at the high-frequency end of the band, use the station nearest 105 mc.; for the adjustments at the low-frequency end of the band, use the station nearest 88 mc. or 92 mc., as indicated. If the radio is greatly misaligned, it may be necessary to adjust the trimmers and coils for maximum noise at each end of the band before station signals can be heard.

© John F. Rider

Compliments of www.nucow.com

MODEL 50-1727

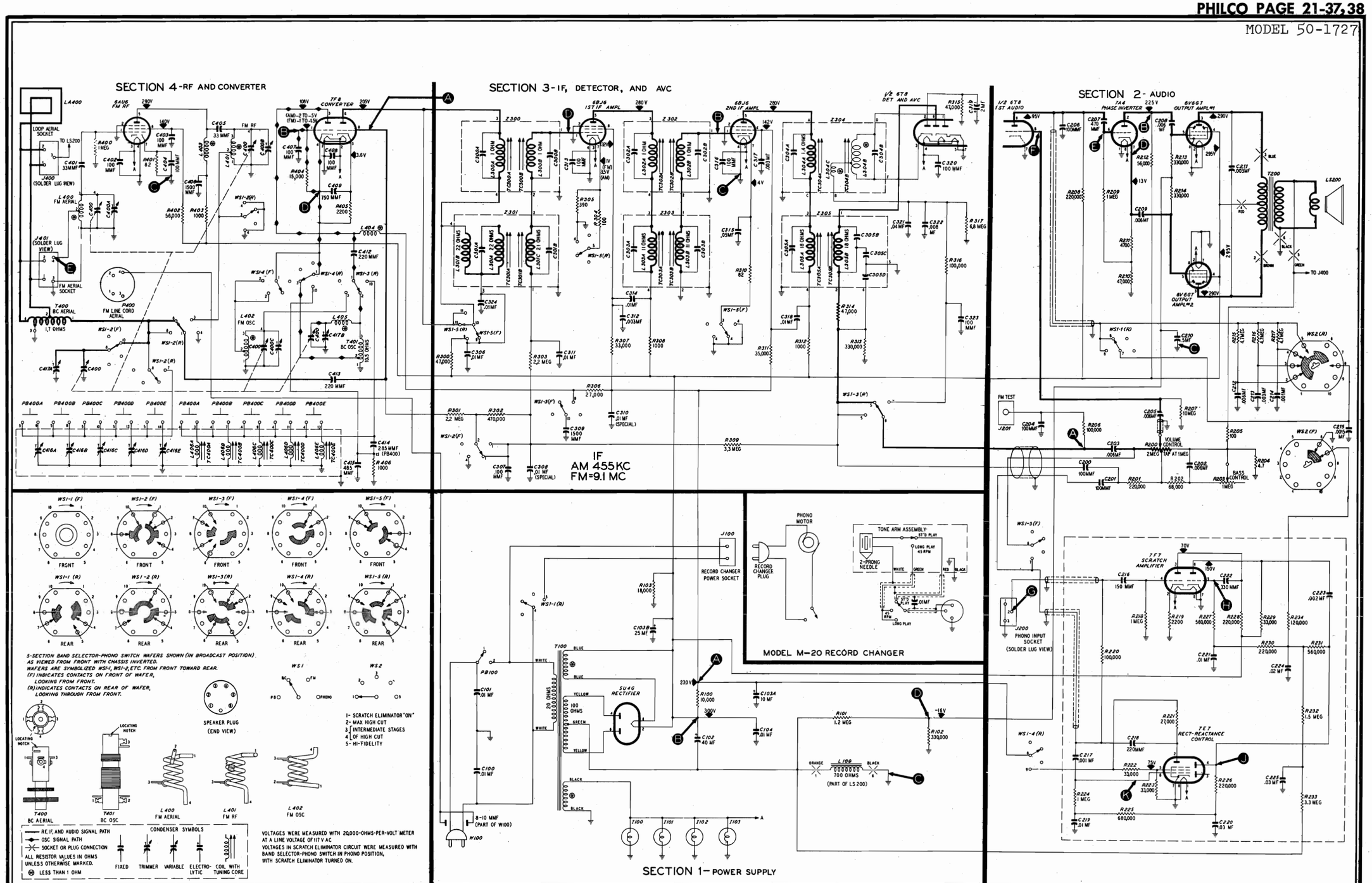

FIGURE 9. PHILCO RADIO-PHONOGRAPH MODEL 50-1727, SECTIONALIZED SCHEMATIC DIAGRAM, SHOWING TEST POINTS

RECORD CHANGER: Model M-20, on pages RCD.CH.20-1 through RCD.CH.20-16.

©John F. Rider

Compliments of www.nucow.com

AM ALIGNMENT CHART

STEP	SIGNAL GENERATOR		RADIO		ADJUST
	CONNECTION TO RADIO	DIAL SETTING	DIAL SETTING	SPECIAL INSTRUCTIONS	
1	Through .1-mf. condenser to pin 8 of 7F8 tube.	455 kc.	Gang fully closed.	Adjust each trimmer, in order given, for maximum output. Do not repeat adjustments.	TC305B—3rd i-f sec. TC305A—3rd i-f pri. TC303B—2nd i-f sec. TC303A—2nd i-f pri. TC301B—1st i-f sec. TC301A—1st i-f pri.
2	Loosely coupled with radiating loop. See note below.	1600 kc.	1600 kc.	Adjust for maximum output.	C417B—Osc.
3	Same as step 2.	1500 kc.	1500 kc.	Adjust for maximum output.	C417A—Aerial
4	Repeat steps 2 and 3 until no further increase in output is obtained.				

RADIATING LOOP: Make up a six-to-eight turn, 6-inch-diameter loop, using insulated wire; connect to signal generator leads and place near radio loop. Radio loop must be connected to set during alignment.

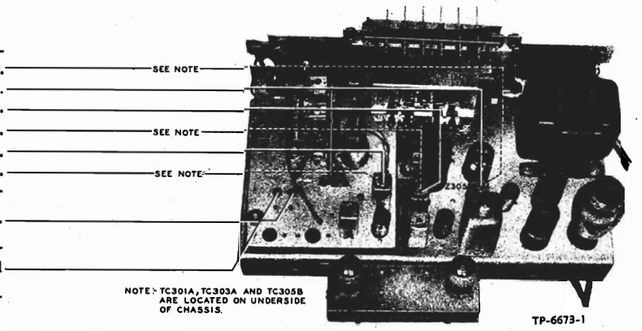

FIGURE 7. TOP VIEW, SHOWING AM TRIMMER LOCATIONS

FM ALIGNMENT CHART

STEP	SIGNAL GENERATOR		RADIO		ADJUST
	CONNECTION TO RADIO	DIAL SETTING	DIAL SETTING	SPECIAL INSTRUCTIONS	
1	Through .1-mf. condenser to pin 1 of 6BJ6 2nd i-f ampl.	9.1 mc.	88 mc.	Adjust trimmers, in order given, for maximum output.	TC304B—3rd i-f sec. TC304A—3rd i-f pri.
2	Through .1-mf. condenser to pin 1 of 6BJ6 1st i-f ampl.	9.1 mc.	88 mc.	Same as step 1.	TC302B—2nd i-f sec. TC302A—2nd i-f pri.
3	Through .1-mf. condenser to pin 8 of 7F8 converter.	9.1 mc.	88 mc.	Same as step 1.	TC300B—1st i-f sec. TC300A—1st i-f pri.
4	To FM aerial terminal (terminal 4 of J401).	105 mc.	105 mc.	Adjust for maximum.	C400C—Osc.
5	Same as step 4.	92 mc.	92 mc.	Adjust L402 for maximum (see Note 1).	L402—Osc. tracking
6	Same as step 4.	105 mc.	105 mc.	Adjust for maximum while rocking tuning control.	C400B—R.f.
7	Same as step 4.	105 mc.	105 mc.	Adjust for maximum.	C400A—Aerial
8	Dipole radiator (see Note 3).	92 mc.	92 mc.	Adjust L401 for maximum while rocking tuning control (see Note 1).	L401—R-f tracking
9	Same as step 8.	92 mc.	92 mc.	Adjust L400 for maximum (see Note 1).	L400—Aerial tracking
10	Repeat steps 5 through 10 until no further increase is obtained.				

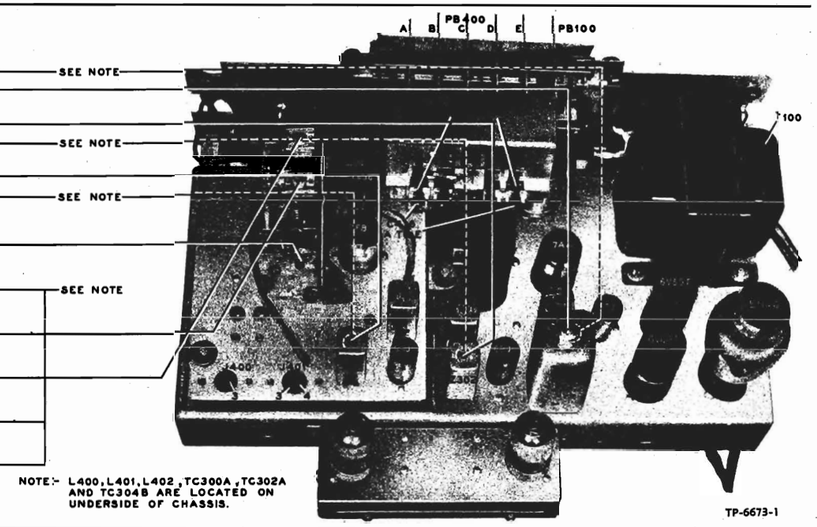

FIGURE 8. TOP VIEW, SHOWING FM TRIMMER LOCATIONS

SETTING THE PUSH BUTTONS

1. Connect the output meter between the No. 3 pin of the aerial input jack, J400, and the chassis. See figure 8.

2. Turn the volume control to maximum, and the bass control fully counterclockwise. Turn the treble selector switch fully clockwise. Set the band switch to the push-button position.

3. Couple the signal generator loosely to the loop aerial (see RADIATING LOOP note under AM ALIGNMENT CHART).

4. Turn on the power, and allow the radio to warm up for 15 minutes before starting the adjustments.

5. Starting with the lowes frequency desired, set the signal generator to the frequency (modulation on), push the station-selector push button, and adjust the associated oscillator tuning core and aerial trimmer condenser (marked on rear of chassis) for maximum indication on the output meter.

6. Reset the signal-generator frequency, and repeat the procedure for each remaining station-selector push button.

7. Turn off the signal generator, and make a final adjustment of all tuning cores and trimmer condensers while listening to the stations for which the adjustments are being made.

©John F. Rider

Compliments of www.nucow.com

MODEL 50-1727

REPLACEMENT PARTS LIST

NOTE: Part numbers identified by an asterisk (*) are general replacement items. These numbers may not be identical with those on factory assemblies; also, the electrical values of some replacement items may differ from the values indicated in the schematic diagram and parts list. The values substituted in any case are so chosen that the operation of the radio will be either unchanged or improved. When ordering replacements, use only the "Service Part No."

SECTION 1
POWER SUPPLY

Reference Symbol	Description	Service Part No.
C100	Condenser, line filter, .01 mf.	60-0120*
C101	Condenser, line filter, .01 mf.	60-0120*
C102	Condenser, electrolytic, filter, 40 mf., 450v	30-2568-20
C103	Condenser, electrolytic, 2-section	30-2556
C103A	Condenser, filter, 10 mf., 450v	Part of C103
C103B	Condenser, filter, 25 mf., 450v	Part of C103
C104	Condenser, filter, .01 mf.	61-0120*
L100	Field coil, filter choke	Part of LS200
I100	Lamp, bin light, 6.3-volt	34-2040
I101	Lamp, jewel light, 6.3-volt	34-2040
I102	Lamp, pilot light, 6.3-volt	34-2040
I103	Lamp, pilot light, 6.3-volt	34-2040
J100	Socket, phono power	27-6200
PB100	Switch, power off-on	Part of 42-1881†
R100	Resistor, filter, 10,000 ohms, 10w	33-1336-21
R101	Resistor, bias divider, 1.2 megohms	66-5123340*
R102	Resistor, bias divider, 330,000 ohms	66-4333340*
R103	Resistor, bleeder, 18,000 ohms, 10 watts	33-1335-85
T100	Transformer, power	32-8378
W100	Line cord and plug	L-2183*
WS1-1(R)	Switch-wafer section	Part of 42-1877‡

SECTION 2
AUDIO CIRCUITS

Reference Symbol	Description	Service Part No.
C200	Condenser, AM tone compensation 100 mmf.	62-110009001
C201	Condenser, AM tone compensation, 100 mmf.	62-110009001
C202	Condenser, bass tone compensation, .006 mf.	45-3500-7*
C203	Condenser, d-c blocking, .006 mf.	45-3500-7*
C204	Condenser, r-f by-pass, 100 mmf.	62-110009001
C205	Condenser, d-c blocking, .006 mf.	45-3500-7*
C206	Condenser, r-f by-pass, 100 mmf.	62-110009001
C207	Condenser, d-c blocking, 470 mmf.	60-10515307*
C208	Condenser, d-c blocking, .006 mf.	45-3500-7*
C209	Condenser, d-c blocking, .006 mf.	45-3500-7*
C210	Condenser, bias filter, .5 mf.	45-3500-10*
C211	Condenser, tone compensation, .003 mf.	61-0117*
C212	Condenser, tone compensation, .006 mf.	45-3500-7*
C213	Condenser, tone compensation, .003 mf.	61-0117*
C214	Condenser, tone compensation, .001 mf.	45-3500-5*
C215	Condenser, tone compensation, .0015 mf.	45-3500-6*
C216	Condenser, high-pass filter, 150 mmf.	60-10155407*
C217	Condenser, d-c blocking, .001 mf.	45-3500-5*
C218	Condenser, reactance feedback, 220 mmf.	60-10205307*
C219	Condenser, bias filter, .01 mf.	61-0120*

†42-1881 Push-button switch assembly

SECTION 2 (Continued)
AUDIO CIRCUITS

Reference Symbol	Description	Service Part No.
C220	Condenser, bias filter, .03 mf.	45-3500-1*
C221	Condenser, bias filter, .01 mf.	61-0120*
C222	Condenser, d-c blocking, 330 mmf.	60-10335407*
C223	Condenser, d-c blocking, .002 mf.	61-0062*
C224	Condenser, bias filter, .02 mf.	61-0108*
C225	Condenser, bias filter, .03 mf.	45-3500-1*
J200	Socket, phono input	27-6126
J201	Socket, FM test	27-6180
LS200	Speaker, electrodynamic, 12" (including L100)	36-1630
R200	Volume control, 2 megohms, tap at 1 megohm	33-5535-19
R201	Resistor, bass boost, 220,000 ohms	66-4223340*
R202	Resistor, tone compensation, 68,000 ohms	66-3683340*
R203	Tone control, bass, 1 megohm	33-5539-52
R204	Resistor, voltage divider, inverse feedback, 4.7 ohms	66-9473340*
R205	Resistor. voltage divider, inverse feedback, 100 ohms	66-1103340*
R206	Resistor, isolating, 100,000 ohms	66-4103340*
R207	Resistor, grid return, 10 megohms	66-6103340*
R208	Resistor, plate load, 220,000 ohms	66-4223340*
R209	Resistor, grid return, 1 megohm	66-5103340*
R210	Resistor, cathode bias, 47,000 ohms	66-3473340*
R211	Resistor, cathode load, 4700 ohms	66-2473340*
R212	Resistor, plate load, 56,000 ohms	66-3563340*
R213	Resistor, grid return, 330,000 ohms	66-4333340*
R214	Resistor, grid return, 330,000 ohms	66-4333340*
R215	Resistor, tone compensation, 4.7 megohms	66-5473340*
R216	Resistor, tone compensation, 4.7 megohms	66-5473340*
R217	Resistor, tone compensation, 4.7 megohms	66-5473340*
R218	Resistor, grid return, 1 megohm	66-5103340*
R219	Resistor, cathode bias, 2200 ohms	66-2223340*
R220	Resistor, low-pass filter, 100,000 ohms	66-4103340*
R221	Resistor, plate load, 27,000 ohms	66-3273340*
R222	Resistor, screen voltage divider, 33,000 ohms	66-3333340*
R223	Resistor, screen voltage divider, 33,000 ohms	66-3333340*
R224	Resistor, grid return, 1 megohm	66-5103340*
R225	Resistor, bias filter, 680,000 ohms	66-4683340*
R226	Resistor, bias filter, 220,000 ohms	66-4223340*
R227	Resistor, grid return, 560,000 ohms	66-4563340*
R228	Resistor, plate load, 220,000 ohms	66-4223340*
R229	Resistor, plate load, 33,000 ohms	66-3333340*
R230	Resistor, bias filter, 220,000 ohms	66-4223340*
R231	Resistor, diode load, 560,000 ohms	66-4563340*

‡42-1877 Band switch, 5-section

© John F. Rider

Compliments of www.nucow.com

MODEL 50-1727

REPLACEMENT PARTS LIST

SECTION 2 (Continued)
AUDIO CIRCUITS

Reference Symbol	Description	Service Part No.
R232	Resistor, bias filter, 1.5 megohms	66-5153340*
R233	Resistor, bias filter, 3.3 megohms	66-5333340*
R234	Resistor, diode load, 120,000 ohms	66-4123340*
T200	Transformer, output	32-8379
WS1-1(R)	Switch-wafer section	Part of 42-1877‡
WS1-3(F)	Switch-wafer section	Part of 42-1877‡
WS1-4(R)	Switch-wafer section	Part of 42-1877‡
WS2	Switch, wafer, scratch eliminator off-on and fidelity (treble selector) switch	42-1876

SECTION 3
I-F, DETECTOR, AND A-V-C CIRCUITS

C300A	Condenser, fixed trimmer, pri., 1st FM i-f	Part of Z300
C300B	Condenser, fixed trimmer, sec., 1st FM i-f	Part of Z300
C301A	Condenser, fixed trimmer, pri., 1st AM i-f	Part of Z301
C301B	Condenser, fixed trimmer, sec., 1st AM i-f	Part of Z301
C302A	Condenser, fixed trimmer, pri., 2nd FM i-f	Part of Z302
C302B	Condenser, fixed trimmer, sec., 2nd FM i-f	Part of Z302
C303A	Condenser, fixed trimmer, pri., 2nd AM i-f	Part of Z303
C303B	Condenser, fixed trimmer, sec., 2nd AM i-f	Part of Z303
C304A	Condenser, fixed trimmer, pri., 3rd FM i-f	Part of Z304
C304B	Condenser, fixed trimmer, sec., 3rd FM i-f	Part of Z304
C305A	Condenser, fixed trimmer, pri., 3rd AM i-f	Part of Z305
C305B	Condenser, fixed trimmer, sec., 3rd AM i-f	Part of Z305
C305C	Condenser, r-f by-pass	Part of Z305
C305D	Condenser, r-f by-pass	Part of Z305
C306	Condenser, plate decoupling, .01 mf.	61-0120*
C307	Condenser, r-f by-pass, 100 mmf.	62-110009001
C308	Condenser (special), a-v-c filter, .01 mf.	30-4641
C309	Condenser, r-f by-pass, 1500 mmf.	62-215001011
C310	Condenser, (special), r-f by-pass, .01 mf.	30-4641
C311	Condenser, r-f by-pass, .01 mf.	61-0120*
C312	Condenser, screen by-pass, .003 mf.	61-0109*
C313	Condenser, filament by-pass, 100 mmf.	62-110009001
C314	Condenser, plate by-pass, .01 mf.	61-0120*
C315	Condenser, cathode by-pass, .05 mf.	61-0170*
C316	Condenser, filament by-pass, 100 mmf.	62-110009001
C317	Condenser, screen by-pass, .003 mf.	61-0109*
C318	Condenser, plate by-pass, .01 mf.	61-0120*
C319	Condenser, electrolytic, diode-load filter, 2 mf., 50v	30-2417-7
C320	Condenser, filament by-pass, 100 mmf.	62-110009001
C321	Condenser, de-emphasis, .04 mf.	45-3500-2
C322	Condenser, de-emphasis, .008 mf.	30-4112*
C323	Condenser, r-f by-pass, 100 mmf.	62-110009001
C324	Condenser, plate decoupling, .01 mf.	61-0120*
L300A	Coil, primary winding, 1st FM i-f	Part of Z300

(SECTION 3 (Continued)
I-F, DETECTOR, AND A-V-C CIRCUITS

Reference Symbol	Description	Service Part No.
L300B	Coil, secondary winding, 1st FM i-f	Part of Z300
L301A	Coil, primary winding, 1st AM i-f	Part of Z301
L301B	Coil, tertiary winding, 1st AM i-f	Part of Z301
L301C	Coil, secondary winding, 1st AM i-f	Part of Z301
L302A	Coil, primary winding, 2nd FM i-f	Part of Z302
L302B	Coil, secondary winding, 2nd FM i-f	Part of Z302
L303A	Coil, primary winding, 2nd AM i-f	Part of Z303
L303B	Coil, secondary winding, 2nd AM i-f	Part of Z303
L304A	Coil, primary winding, 3rd FM i-f	Part of Z304
L304B	Coil, secondary winding, 3rd FM i-f	Part of Z304
L304C	Coil, tertiary winding, 3rd FM i-f	Part of Z304
L305A	Coil, primary winding, 3rd AM i-f	Part of Z305
L305B	Coil, secondary winding, 3rd AM i-f	Part of Z305
R300	Resistor, plate dropping, 47,000 ohms	66-3473340*
R301	Resistor, grid return, 2.2 megohms	66-5223340*
R302	Resistor, a-v-c voltage divider, 470,000 ohms	66-4473340*
R303	Resistor, grid return, 2.2 megohms	66-5223340*
R304	Resistor, cathode bias (FM), 100 ohms	66-1103340*
R305	Resistor, cathode bias, 390 ohms	66-1393340*
R306	Resistor, plate dropping, 27,000 ohms	66-3273340*
R307	Resistor, screen dropping, 33,000 ohms	66-3333340*
R308	Resistor, plate decoupling, 1000 ohms	66-2103340*
R309	Resistor, a-v-c filter, 3.3 megohms	66-5333340*
R310	Resistor, cathode bias, 82 ohms	66-0823340*
R311	Resistor, screen dropping, 33,000 ohms	66-3333340*
R312	Resistor, plate decoupling, 1000 ohms	66-2103340*
R313	Resistor, diode load, 330,000 ohms	66-4333340*
R314	Resistor, i-f filter, 47,000 ohms	66-3473340*
R315	Resistor, FM diode load, 47,000 ohms	66-3473340*
R316	Resistor, isolating, 100,000 ohms	66-4103340*
R317	Resistor, FM detector load, 6.8 megohms	66-5683340*
TC300A	Tuning core, pri., 1st FM i-f	Part of Z300
TC300B	Tuning core, sec., 1st FM i-f	Part of Z300
TC301A	Tuning core, pri., 1st AM i-f	Part of Z301
TC301B	Tuning core, sec., 1st AM i-f	Part of Z301
TC302A	Tuning core, pri., 2nd FM i-f	Part of Z302
TC302B	Tuning core, sec., 2nd FM i-f	Part of Z302
TC303A	Tuning core, pri., 2nd AM i-f	Part of Z303
TC303B	Tuning core, sec., 2nd AM i-f	Part of Z303
TC304A	Tuning core, pri., 3rd FM i-f	Part of Z304
TC304B	Tuning core, sec., 3rd FM i-f	Part of Z304
TC305A	Tuning core, pri., 3rd AM i-f	Part of Z305
TC305B	Tuning core, sec., 3rd AM i-f	Part of Z305
WS1-2(F)	Switch-wafer section	Part of 42-1877‡
WS1-3(F)	Switch-wafer section	Part of 42-1877‡
WS1-3(R)	Switch-wafer section	Part of 42-1877‡
WS1-5(F)	Switch-wafer section	Part of 42-1877‡
WS1-5(R)	Switch-wafer section	Part of 42-1877‡
Z300	Transformer, 1st FM i-f	32-4257A
Z301	Transformer, 1st AM i-f	32-4258A
Z302	Transformer, 2nd FM i-f	32-4257-1A
Z303	Transformer, 2nd AM i-f	32-4160-3A
Z304	Transformer, 3rd FM i-f	32-4261-1
Z305	Transformer, 3rd AM i-f	32-4240-2A

‡42-1877 Band switch, 5-section

© John F. Rider

Compliments of www.nucow.com

MODEL 50-1727

REPLACEMENT PARTS LIST

SECTION 4
R-F AND CONVERTER CIRCUITS

Reference Symbol	Description	Service Part No.
C400	Condenser, tuning gang (AM, 2-section; FM, 3-section)	31-2724-6
C400A	Condenser, trimmer, FM aerial	Part of C400
C400B	Condenser, trimmer, FM r.f.	Part of C400
C400C	Condenser, trimmer, FM osc.	Part of C400
C401	Condenser, d-c blocking, 33 mmf.	30-1224
C402	Condenser, filament by-pass, 100 mmf.	62-110009001
C403	Condenser, screen by-pass, 100 mmf.	62-110009001
C404	Condenser, cathode by-pass, 100 mmf.	62-110009001
C405	Condenser, d-c blocking, 33 mmf.	30-1224
C406	Condenser, r-f by-pass, 1500 mmf.	62-215001011
C407	Condenser, oscillator grid, 100 mmf.	62-110009001
C408	Condenser, filament by-pass, 100 mmf.	62-110009001
C409	Condenser, d-c blocking, 750 mmf.	60-10755301
C412	Condenser, d-c blocking, 220 mmf.	62-122001001
C413	Condenser, d-c blocking, 220 mmf.	62-122001001
C414	Condenser, ceramic, r-f voltage divider, 285 mmf.	30-1224-14
C415	Condenser, ceramic, r-f voltage divider, 485 mmf.	30-1224-15
C416	Condenser, aerial trimmer assembly, push-button (including C416A to C416E)	31-6479-3
C417	Condenser, trimmer assembly, 2-section	31-6476-8
C417A	Condenser, trimmer, Bc. aerial	Part of C417
C417B	Condenser, trimmer, Bc. oscillator	Part of C417
J400	Socket, loop aerial	27-6214-6
J401	Socket, FM dipole	27-6214-1
LA400	Loop aerial, Bc.	76-4337-1
L400	Coil, FM aerial	32-4158-1
L401	Coil, FM r-f	32-4159-1
L402	Coil, FM oscillator	32-4018-5
L403	Coil, r-f choke, FM plate load	32-4061-2
L404	Coil, r-f choke	32-4061-2
L405	Coil, r-f choke	32-4061-2
L406	Coil, oscillator assembly, push-button	
L406A	Coil, oscillator, 900—1600 kc.	32-3779
L406B	Coil, oscillator, 850—1500 kc.	32-3779
L406C	Coil, oscillator, 650—1300 kc.	32-4059-3
L406D	Coil, oscillator, 600—1200 kc.	32-4059-3
L406E	Coil, oscillator, 540—1000 kc.	32-4059-3
P400	Plug, wire, and lug assembly, FM aerial	41-3791-1
PB400A to PB400E	Push-button switch assembly	42-1881
R400	Resistor, grid return, 1 megohm	66-5103340*
R401	Resistor, cathode bias, 82 ohms	66-0823340*
R402	Resistor, screen dropping, 56,000 ohms	66-3563340*
R403	Resistor, plate decoupling, 1000 ohms	66-2103340*
R404	Resistor, grid return, 15,000 ohms	66-3153340*
R405	Resistor, cathode bias, 2200 ohms	66-2223340*
R406	Resistor, cathode bias, 1000 ohms	66-2103340*
T400	Transformer, Bc. aerial	32-4049-3
T401	Transformer, Bc. oscillator	32-4221-3
TC400A to TC400E	Tuning cores, push-button oscillator	Part of Z400

‡42-1877 Band switch, 5-section

SECTION 4 (Continued)
R-F AND CONVERTER CIRCUITS

Reference Symbol	Description	Service Part No.
WS1-2(F)	Switch-wafer section	Part of 42-1877‡
WS1-2(R)	Switch-wafer section	Part of 42-1877‡
WS1-3(R)	Switch-wafer section	Part of 42-1877‡
WS1-4(F)	Switch-wafer section	Part of 42-1877‡
WS1-4(R)	Switch-wafer section	Part of 42-1877‡

MISCELLANEOUS

Description	Service Part No
Cabinet and Cabinet Hardware	
Back assembly, wood	76-4344
Back, cabinet, masonite	54-7702
Baffle and cloth, speaker	40-7575
Baffle (cardboard) and cloth assembly, dummy	40-7575-1
Baffle, speaker	219138
Bezel	56-6375
Bin mechanism, R.H.	76-3223-6
Bin mechanism, L.H.	76-3223-5
Spring (2) bin mechanism, phono mtg.	56-4978
Bullet catch (2)	45-6002
Strike plate (2), bullet catch	45-6003
Cabinet	10731
Dome	45-6042
Door, record album	45-6473
Doors, matched set	45-6472
Door pull (2)	56-5398-1
Frame assembly, changer mounting	76-4104
Grommet (3) changer mtg.	54-4313
Spring (6) changer mtg.	56-3045FA15
Hinge, phono door	56-5713-3
Hinge, phono door	56-5713-4
Hinge, knife (stop), top, radio door	56-5713
Hinge, knife (stop), bottom, radio door	56-5713-2
Hinge, knife, R.H., top, record door	45-6449
Hinge, knife, L.H., bottom, record door	45-6449-1
Instrument panel	45-6474
Knob, door	56-5282-1
Metal grille (2)	56-6370
Cable-and-plug assembly, speaker	41-3896
Dial Scale Parts and Hardware	
Cord, drive (25-ft. spool)	45-8750*
Dial backplate-and-pulley assembly	76-4309
Knob (5)	54-4486
Pointer	54-4648
Carriage, pointer	56-6408
Spring (2), gang and pointer	56-2617
Push-button knob (6)	54-4292
Cap, plastic (6), push-button knob	54-4294
Tab kit	40-7583
Scale-and-backplate assembly	76-4298
Scale strap (2), end, scale mounting	56-2234-2
Scale strap, middle, scale mtg.	56-4756
Jewel	54-4304
Jewel-and-bin-lamp assembly	41-3896
Pilot-lamp-socket assembly, L.H.	27-6233-22
Pilot-lamp-socket assembly, R.H.	27-6233-25
Shaft assembly, tuning	76-4245
Socket, Loktal, 7A4	27-6177
Socket, Loktal, 7F8 (r-f section, mica-filled bakelite)	27-6213
Socket, Loktal, 7E7, 7F7	27-6138
Socket, miniature, 6BA6 (2)	27-6226
Socket, miniature, 6AU6 (r-f section, mica-filled bakelite)	27-6203-1
Socket, miniature 6T8	27-6203-5
Socket, octal (3)	27-6174
Spring, changer mounting (3)	56-7059FA9
Spring, changer mounting (3)	56-7059-1FJ47

© John F. Rider

Compliments of www.nucow.com

MODELS 51-530, 51-530-I,
51-532, 51-532-E, 51-532-I,
51-534, 51-534-I

SPECIFICATIONS

CABINET

Model 51-530	molded plastic, mottled mahogany
Model 51-530-I	molded plastic, ivory
Model 51-532	molded plastic, mottled mahogany
Model 51-532-E	molded plastic, ebony
Model 51-532-I	molded plastic, ivory
Model 51-534	molded plastic, mottled mahogany
Model 51-534-I	molded plastic, ivory

CIRCUIT	5-tube superheterodyne
FREQUENCY RANGE	540—1630 kc.
AUDIO OUTPUT	1.2 watts
OPERATING VOLTAGE	105—125 volts, a.c. or d.c.
POWER CONSUMPTION	30 watts
AERIAL	high impedance loop; connector for external aerial
INTERMEDIATE FREQUENCY	455 kc.
PHILCO TUBES	7A8, 12BA6, 14B6, 50L6GT, 35Z5GT

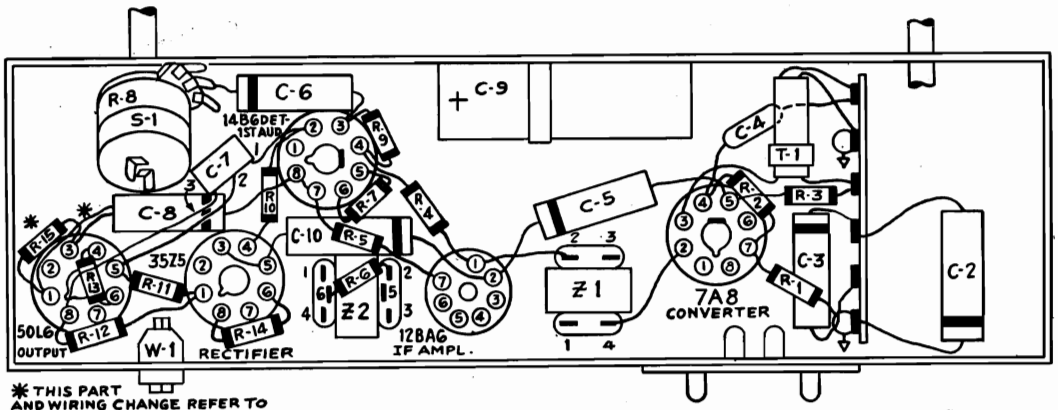

✱ THIS PART AND WIRING CHANGE REFER TO MODEL 51-530 ONLY.

Figure 1. Symbolized Chassis, Showing Parts Placement

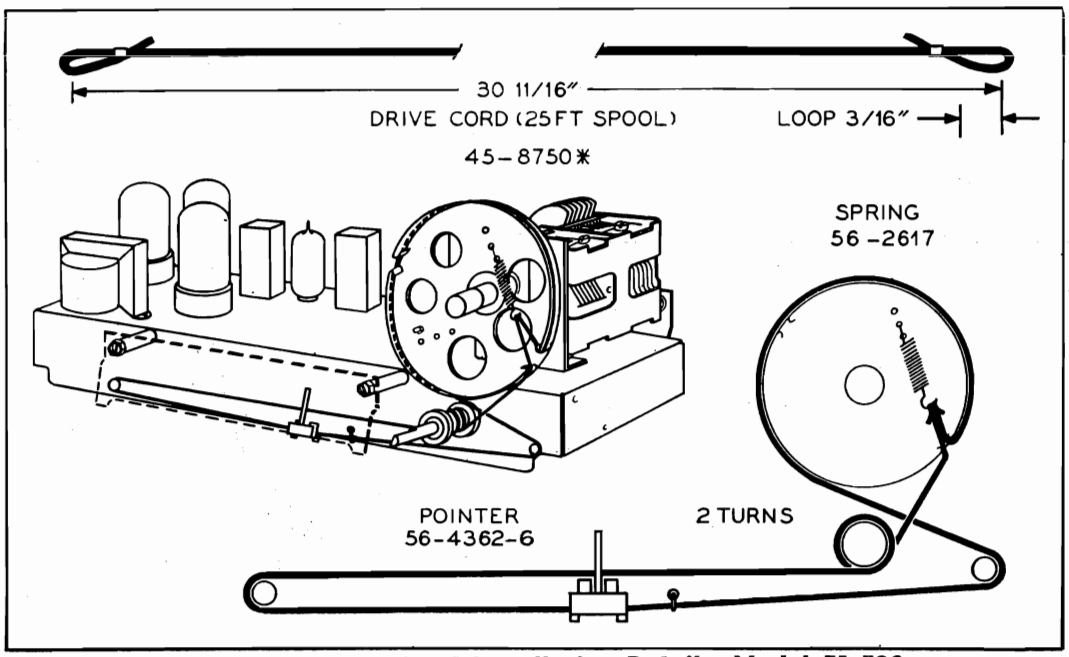

Figure 2. Drive-Cord Installation Details, Model 51-530

©John F. Rider

Compliments of www.nucow.com

MODELS 51-530, 51-530-I, 51-532, 51-532-E, 51-532-I, 51-534, 51-534-I

ALIGNMENT PROCEDURE

CONTROLS: Turn on radio and set volume control to maximum.

DIAL POINTER: Turn tuning condenser to full-mesh position. Set dial pointer to index mark, located to left of "55."

OUTPUT METER: Connect across voice-coil terminals.

SIGNAL GENERATOR: Connect as indicated in chart. Use modulated output.

OUTPUT LEVEL: During alignment, attenuate signal-generator output to maintain output-meter indication below 1.25 volts.

STEP	SIGNAL GENERATOR		RADIO		ADJUST
	CONNECTION TO RADIO	DIAL SETTING	DIAL SETTING	SPECIAL INSTRUCTIONS	
1	Ground lead to B—; output lead through .1-μf. condenser to pin 6 of 7A8 converter	455 kc.	540 kc. (gang fully meshed)	Adjust tuning cores, in order given for maximum output.	TC4—2nd i-f sec. TC3—2nd i-f pri. TC2—1st i-f sec. TC1—1st i-f pri.
2	Radiating loop; see note below.	1600 kc.	1600 kc.	Adjust trimmer for maximum output.	C1B—osc.
3	Same as step 2.	1500 kc.	1500 kc.	Adjust trimmer for maximum output.	C1A—aerial

RADIATING LOOP: Make up a 6—8 turn, 6-inch-diameter loop from insulated wire; connect to signal-generator leads and place near radio loop antenna.

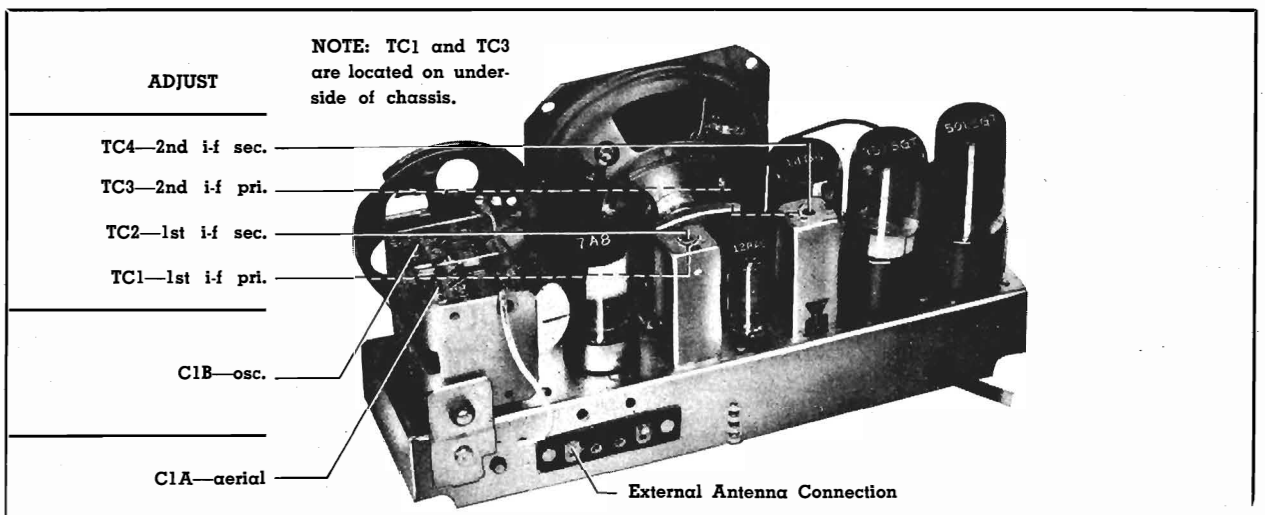

Figure 3. Top View, Showing Trimmer Locations

©John F. Rider

Compliments of www.nucow.com

MODELS 51-530,
51-532, 51-534

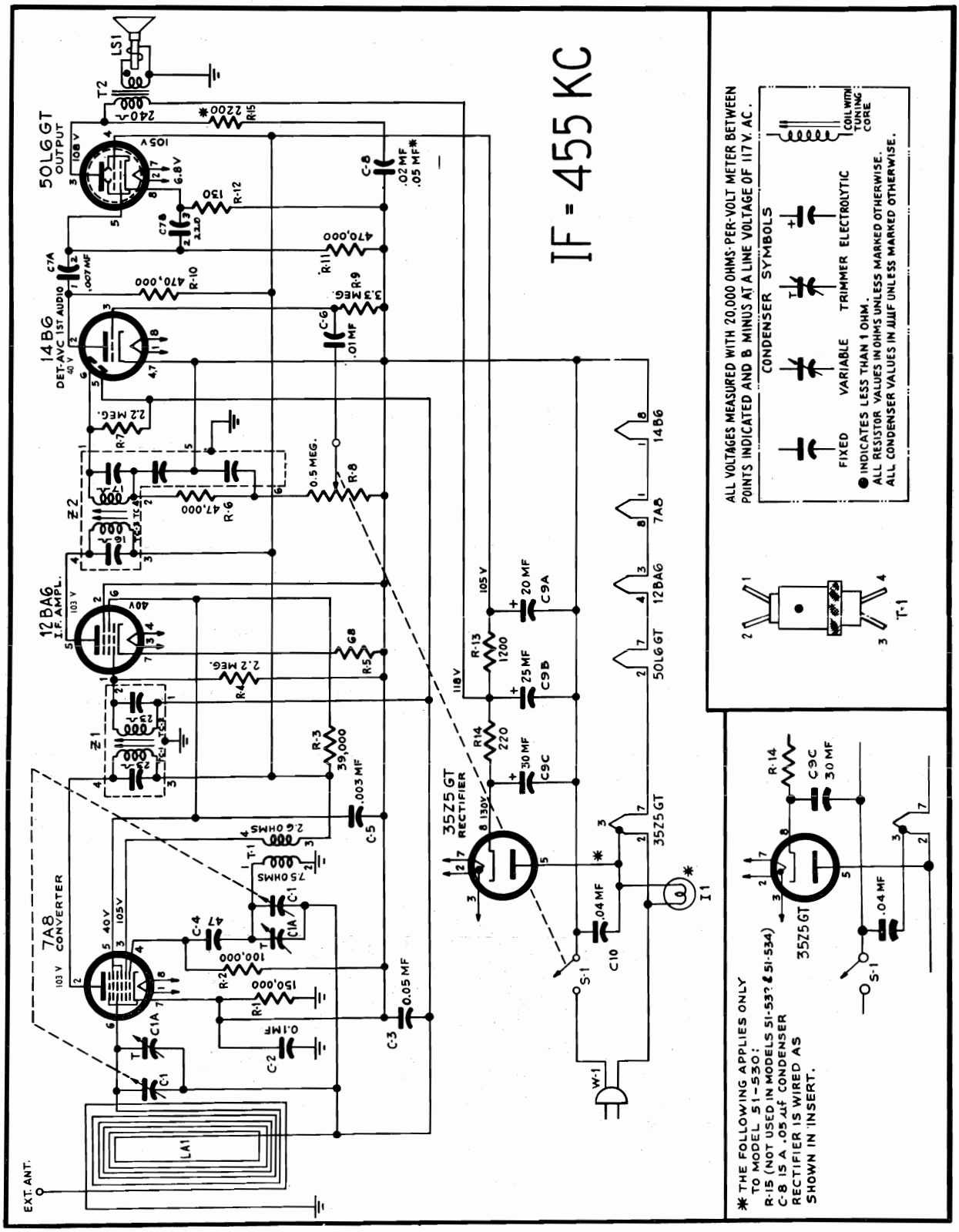

Figure 4. Philco Models 51-530, 51-532, 51-534 Schematic Diagram

©John F. Rider

Compliments of www.nucow.com

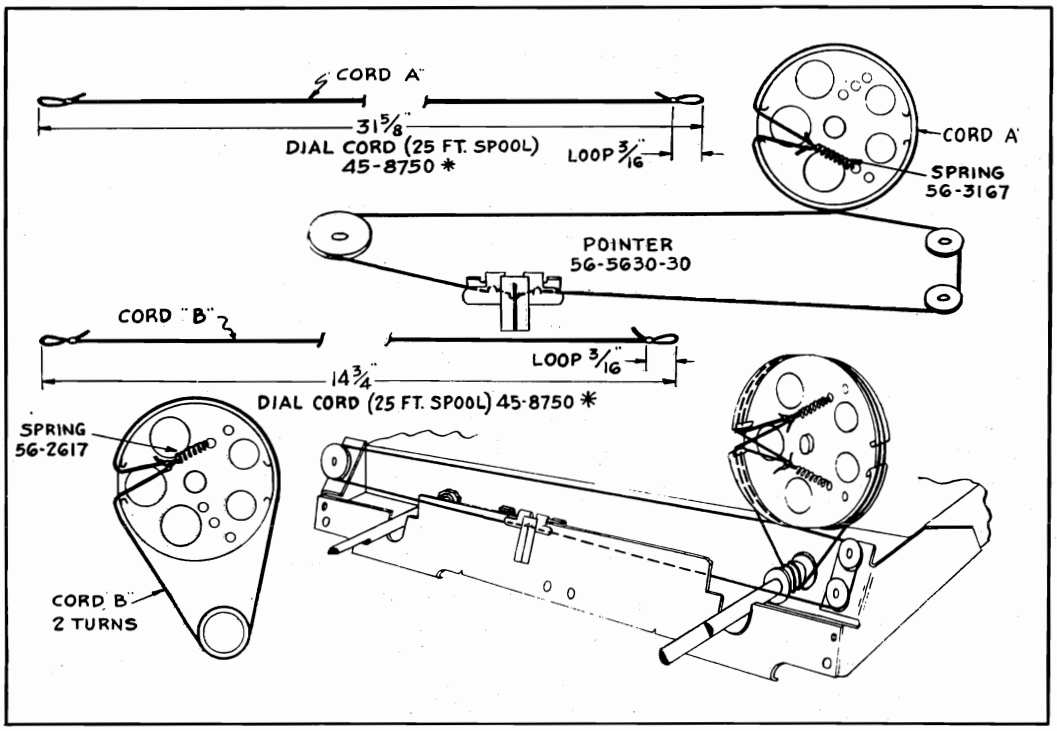

Figure 5. Drive-Cord Installation Details, Model 51-532

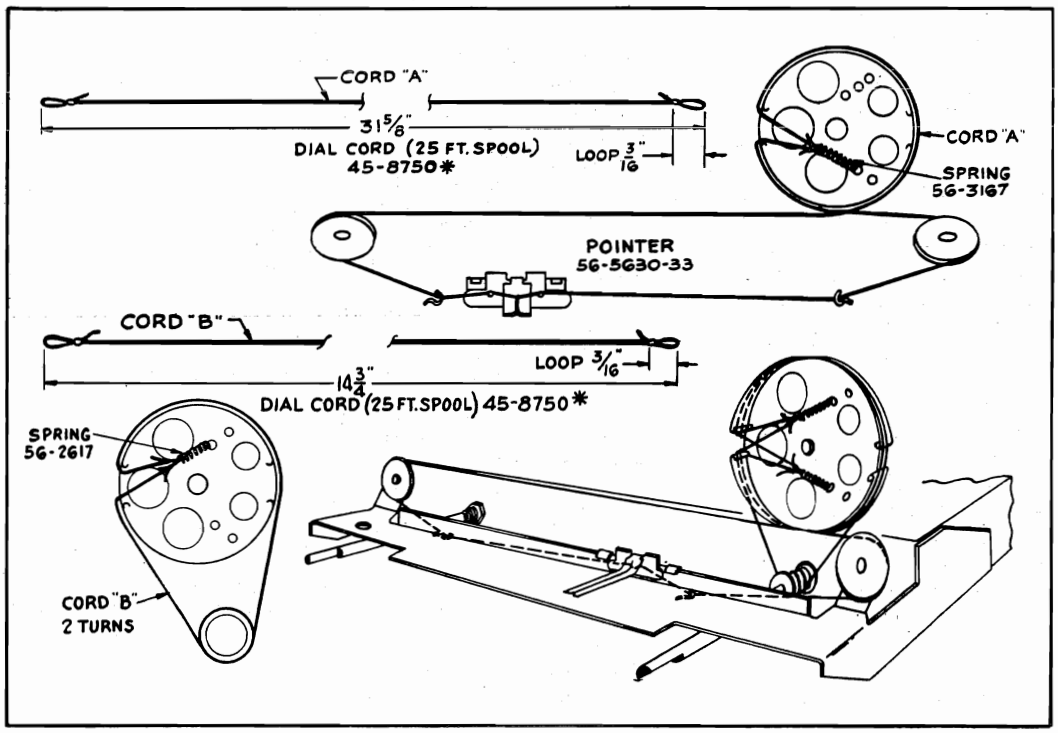

Figure 6. Drive-Cord Installation Details, Model 51-534

©John F. Rider

Compliments of www.nucow.com

MODELS 51-530, 51-530-I,
51-532, 51-532-E, 51-532-I,
51-534, 51-534-I

REPLACEMENT PARTS LIST

NOTE: Part numbers identified by an asterisk (*) are general replacement items. These numbers may not be identical with those on factory parts. Also, the electrical values of some replacement items may differ from the values indicated in the schematic diagram and parts list. The values substituted in any case are so chosen that the operation will be either unchanged or improved. When ordering replacements, use only the "Service Part No."

Reference Symbol	Description	Service Part No.
C1	Condenser, tuning gang	
	Model 51-530	31-2751-6
	Models 51-532 and 51-534	31-2751
C2	Condenser, i-f by-pass, .1 $\mu f.$	61-0113*
C3	Condenser, a-v-c by-pass, .05 $\mu f.$	61-0122*
C4	Condenser, d-c blocking, 47 $\mu\mu f.$	60-00475417*
C5	Condenser, screen by-pass, .003 $\mu f.$	61-0109*
C6	Condenser, d-c blocking, .01 $\mu f.$	61-0120*
C7	Condenser, dual ceramic	30-1239-4
C7A	Condenser, d-c blocking, .007 $\mu f.$	Part of C7
C7B	Condenser, grid by-pass, 220 $\mu\mu f.$	Part of C7
C8	Condenser, tone compensation,	
	Model 51-530, .05 $\mu f.$	61-0122*
	Models 51-532 and 51-534, .02 $\mu f.$	61-0108*
C9	Condenser, electrolytic, 3-section	30-2573
C9A	Condenser, filter, 20 $\mu f.$, 150v	Part of C9
C9B	Condenser, filter, 25 $\mu f.$, 150v	Part of C9
C9C	Condenser, filter, 30 $\mu f.$, 150v	Part of C9
C10	Condenser, line by-pass, .04 $\mu f.$	45-3500-2*
I1	Pilot lamp—Models 51-532 and 51-534 only	34-2068
LA1	Loop antenna	
	Model 51-530	32-4052-33
	Model 51-532	32-4052-38
	Model 51-534	32-4052-51
LS1	Speaker, 4" p.m.	
	Models 51-530 and 51-532	36-1627-5
	Model 51-534	36-1625-3
R1	Resistor, leakage, 150,000 ohms	66-4158340*
R2	Resistor, grid return, 100,000 ohms	66-4108340*
R3	Resistor, screen dropping, 39,000 ohms	66-3398340*
R4	Resistor, grid return, 2.2 megohms	66-5228340*
R5	Resistor, cathode bias, 68 ohms	66-0688340*
R6	Resistor, i-f filter, 47,000 ohms	66-3478340*
R7	Resistor, diode load, 2.2 megohms	66-5228340*
R8	Volume control, 500,000 ohms	
	Model 51-530	33-5538-7
	Model 51-532	33-5566-4
	Model 51-534	33-5566-30
R9	Resistor, grid return, 3.3 megohms	66-5338340*
R10	Resistor, plate load, 470,000 ohms	66-4478340*
R11	Resistor, grid return, 470,000 ohms	66-4478340*
R12	Resistor, cathode bias, 130 ohms	66-1128340*
R13	Resistor, filter, 1200 ohms	66-2128340*
R14	Resistor, filter, 220 ohms, 1 watt	66-1224340*
S1	Switch, off-on	Part of R8
T1	Transformer, oscillator	32-4263
T2	Transformer, output	32-8384
W1	Line cord	L-2183*
Z1	Transformer, 1st i-f	32-4160-6A
Z2	Transformer, 2nd i-f	32-4240-2A

MISCELLANEOUS

Description	Service Part No.
MODEL 51-530	
Cabinet, mottled mahogany	10750
Cabinet, ivory	10750-1
Back	54-7777
Fastener, back mounting (4)	W2235-2FA9
Knob (2)	54-4527-11
Dial backplate assembly	76-4658
Pointer	56-4362-6
Pulley and shaft assembly	76-3671-3
MODEL 51-532	
Cabinet, mahogany	10769-3
Dial scale	54-5069-1
Knob (2)	54-4718-2
Cabinet, ebony	10769-4
Dial scale	54-5069-2
Knob (2)	54-4718-2
Cabinet, ivory	10769-5
Dial scale	54-5069-3
Knob (2)	54-4718-22
Back	54-7911
Fastener, back mounting (4)	W2235FA9
Baffle, speaker	54-7761
Backplate, bracket and pulley assembly	76-6235
Fastener, pilot lamp shield mounting (2)	W2235-1FA9
Grille, plastic	54-4728-2
Speed clip, grille mounting (4)	1W56920FE7
Pointer	56-5630-30
Spring, pointer drive	56-3167
Pulley and shaft assembly	76-3671-2
Scale strap, dial mounting	
LH	56-7373
RH	56-7373-1
Socket assembly, pilot lamp	27-6233-18
MODEL 51-534	
Cabinet, mahogany	10836
Cabinet, ivory	10836-1
Back	54-8249
Fastener, back mounting (4)	W2235FA9
Clips, baffle mounting	1W56920FE7
Dial scale	54-5104
Screw, scale mounting (2)	1W14504FA1
Knob (2)	54-4718-3
Backplate, bracket, and pulley assembly	76-6317
Fastener, pilot lamp shield mounting (2)	W2235-1FA9
Pointer	56-5630-33
Spring, pointer drive	56-3167
Pulley and shaft assembly	76-3671-8
Socket assembly, pilot lamp	27-6233-18
PARTS COMMON TO ALL MODELS	
Bushing, pulley and shaft	27-9437
Clamp, electrolytic mounting	56-1466
Drive cord, 25 foot spool	45-8750*
Fastener, hairpin, pulley and shaft	57-1468FA3
Screw and washer combination, set mounting (3)	1W37654FA3
Socket, loctal (2)	27-6269
Socket, miniature	27-6265
Socket, octal (2)	27-6174
Spring, gang drive	56-2617

©John F. Rider

Compliments of www.nucow.com

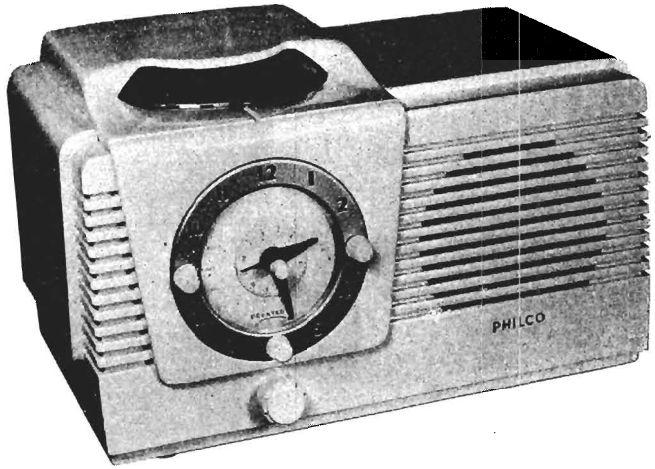

SPECIFICATIONS

CABINET	
Model 51-537	Molded Phenolic, brown
Model 51-537-I	Molded Phenolic, Ivory
FREQUENCY RANGE	540—1600 kc.
AUDIO OUTPUT	1 watt
OPERATING VOLTAGE	117 volts, a.c.
POWER CONSUMPTION	30 watts
AERIAL	High-impedance loop, connector for external aerial
INTERMEDIATE FREQUENCY	455 kc.
PHILCO TUBES (5)	7A8, 14A7, 14B6, 50L6GT, 35Y4

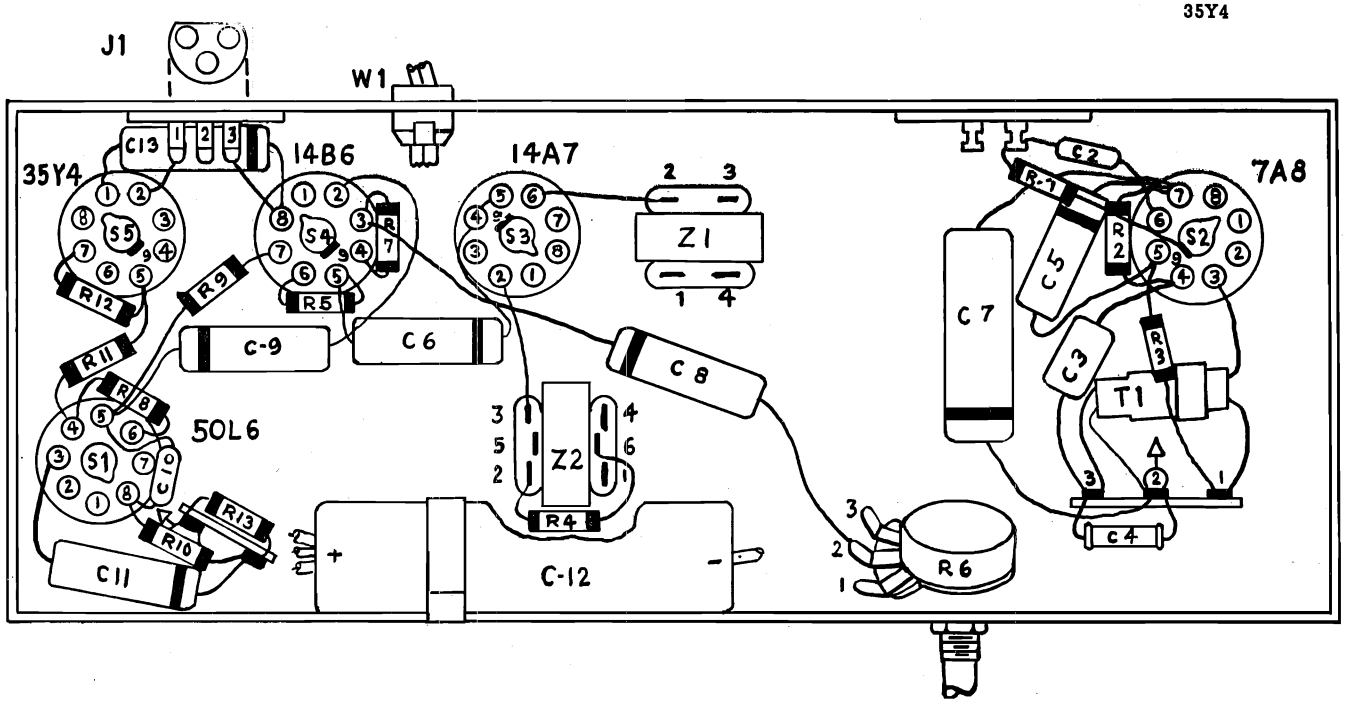

Figure 1. Base View, Showing Symbolized Chassis

©John F. Rider

Compliments of www.nucow.com

MODELS 51-537,
51-537-I

ALIGNMENT PROCEDURE

RADIO CONTROLS — Set volume control to maximum. Set tuning control as indicated in chart.

OUTPUT METER — connect across voice-coil terminals.

SIGNAL GENERATOR — Connect generator and set frequency as indicated in chart. Use modulated output.

OUTPUT LEVEL — During alignment, adjust signal-generator output to hold output-meter reading below 1.25 volts.

STEP	SIGNAL GENERATOR		RADIO		ADJUST
	CONNECTION TO RADIO	DIAL SETTING	DIAL SETTING	SPECIAL INSTRUCTIONS	
1	Connect ground lead to B–; output lead through .1-μf. condenser to grid (pin 6) of 7A8.	455 kc.	Tuning condenser fully meshed.	Adjust tuning cores, in order given, for maximum output.	TC4—2nd i-f sec. TC3—2nd i-f pri. TC2—1st i-f sec. TC1—1st i-f pri.
2	Radiating loop (see note below).	1600 kc.	1600 kc.	Adjust trimmer for maximum output.	C1B—Osc.
3	Same as step 2.	1500 kc.	1500 kc.	Adjust trimmer for maximum output.	C1A—Aerial

RADIATING LOOP: Make up a 6—8 turn, 6-inch-diameter loop, from insulated wire; connect to signal-generator leads and place near radio loop aerial.

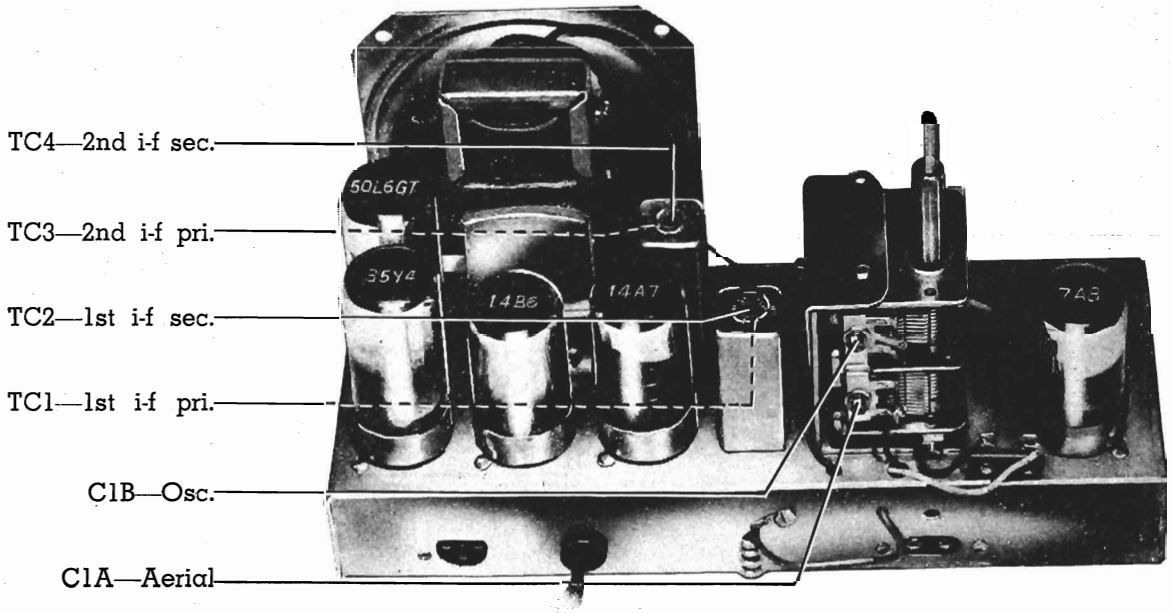

Figure 2. Top View, Showing Trimmer Location

NOTE: TC1 and TC3 are located on underside of chassis.

©John F. Rider

Compliments of www.nucow.com

MODELS 51-537,
51-537-I

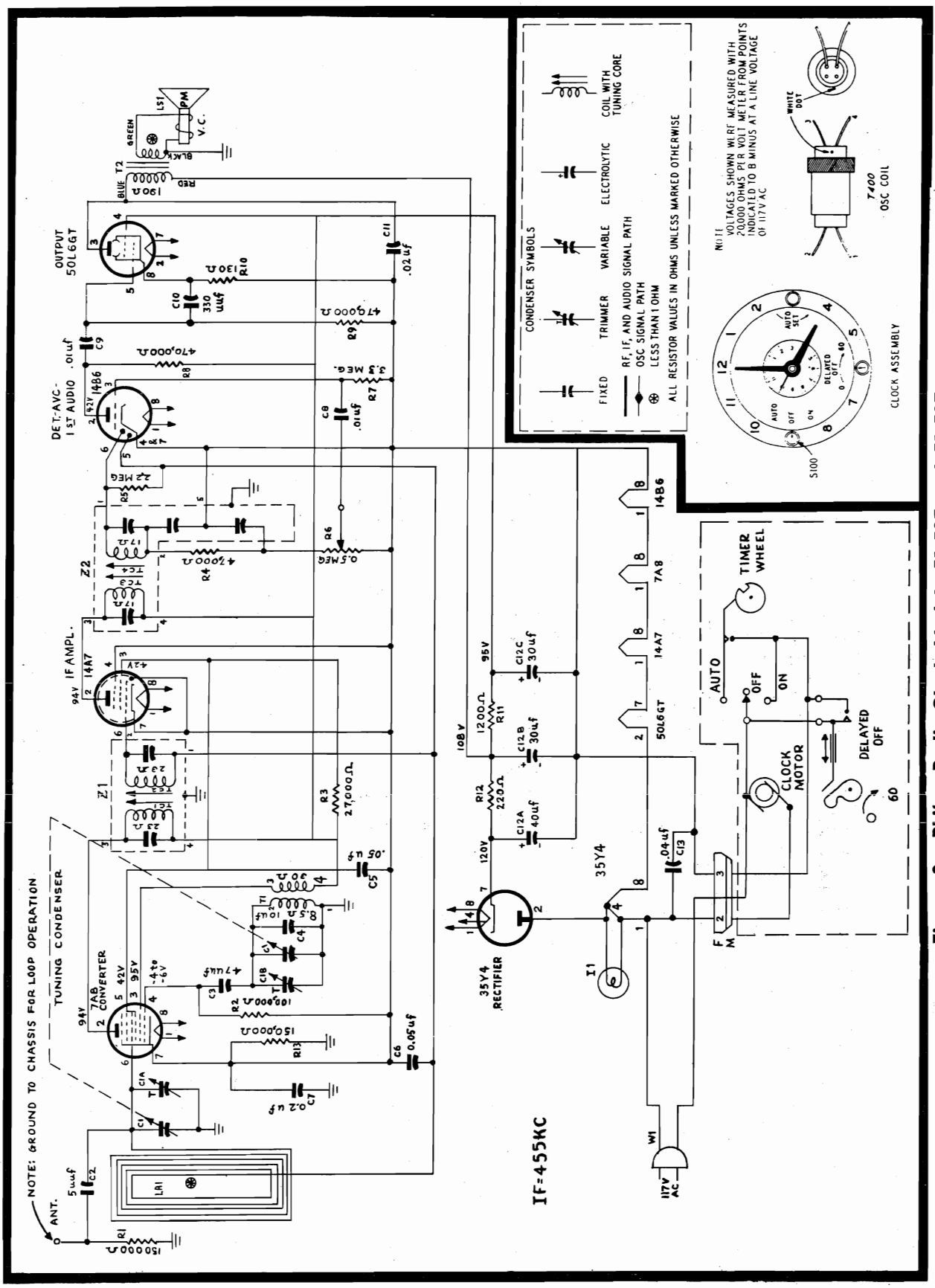

Figure 3. Philco Radio-Clock Models 51-537 and 51-537-I

©John F. Rider

Compliments of www.nucow.com

MODELS 51-537,
51-537-I

REPLACEMENT PARTS LIST

NOTE: Part numbers marked with an asterisk (*) are general replacement items. These numbers may not be identical with those on factory parts; also, the electrical values of some replacement items may differ from the values indicated in the schematic diagram and parts list. The values substituted in any case are so chosen that the operation of the radio will be either unchanged or improved. When ordering replacements, use only the "Service Part No."

Reference Symbol	Description	Service Part No.
C1	Condenser, tuning gang, 2-section	31-2751-5
C1A	Condenser, trimmer, aerial	Part of C1
C1B	Condenser, trimmer, oscillator	Part of C1
C2	Condenser, aerial coupling, 5 $\mu\mu f$.	30-1230
C3	Condenser, d-c blocking, 47 $\mu\mu f$.	60-00475417*
C4	Condenser, temperature compensating, 7.5 $\mu\mu f$.	30-1224-65
C5	Condenser, screen by-pass, .05 μf.	61-0122*
C6	Condenser, a-v-c by-pass, .05 μf.	61-0122*
C7	Condenser, by-pass, .2 μf.	45-3500-3*
C8	Condenser, d-c blocking, .01 μf.	61-0120*
C9	Condenser, d-c blocking, .01 μf.	61-0120*
C10	Condenser, parasitic suppressor, 330 $\mu\mu f$.	62-133001001*
C11	Condenser, tone compensation, .02 μf.	61-0108*
C12	Condenser, electrolytic, 3-section	30-2575-27
C12A	Condenser, filter, 30 μf., 150 wvdc	Part of C12
C12B	Condenser, filter, 25 μf., 150 wvdc	Part of C12
C12C	Condenser, filter, 20 μf., 150 wvdc	Part of C12
C13	Condenser, line filter, .04 μf.	45-3500-2*
I1	Pilot lamp	34-2068
J1	Socket, clock motor and switch	27-6126
LA1	Loop aerial	32-4052-32
LS1	Speaker, p-m	36-1627
R1	Resistor, isolating, 150,000 ohms	66-4158340*
R2	Resistor, grid return, 100,000 ohms	66-4108340*
R3	Resistor, screen dropping, 27,000 ohms	66-3278340*
R4	Resistor, i-f filter, 47,000 ohms	66-3478340*
R5	Resistor, diode load, 2.2 megohms	66-5228340*
R6	Volume control, 500,000 ohms	33-5565-6
R7	Resistor, grid return, 3.3 megohms	66-5338340*
R8	Resistor, plate load, 470,000 ohms	66-4478340*
R9	Resistor, grid return, 470,000 ohms	66-4478340*
R10	Resistor, cathode bias, 130 ohms	66-1128340*
R11	Resistor, filter, 1200 ohms	66-2128340*
R12	Resistor, filter, 220 ohms, 1 watt	66-1224340*
R13	Resistor, leakage, 150,000 ohms	66-4158340*
S1	Switch, AUTO-OFF-ON	Part of clock assembly
T1	Transformer, oscillator	32-4263
T2	Transformer, output	Part of LS1
W1	Line cord	L-2183*
Z1	Transformer, 1st IF	32-4160-6A
Z2	Transformer, 2nd IF	32-4240A

MISCELLANEOUS

Description	Service Part No.
Cabinet	
Model 51-537	10745
Model 51-537-I	10745-1
Back	54-7631
Fastener (4), back mounting	W2235-2FA9
Baffle and cloth assembly	
Model 51-537	40-7730
Model 51-537-I	40-7730-1
Jewel	54-4304
Knobs	
Model 51-537 Volume control	27-4820
"AUTO-OFF-ON" and "DELAYED OFF"	54-4736
"AUTO SET"	54-4736-2
"TIME SET"	54-4736-4
Model 51-537-I Volume control	54-4118
"AUTO-OFF-ON" and "DELAYED OFF"	54-4736-1
"AUTO SET"	54-4736-3
"TIME SET"	54-4736-4
Clamp, electrolytic mounting	56-1466
Clip, pilot lamp mounting	56-3545-6FA3
Clock and cable assembly	
Model 51-537, 60v	76-4640
50v	76-5117
Model 51-537-I, 60v	76-4840
50v	76-5118
Clock cover	56-6710
Dial scale, tuning knob	54-5055-2
Leak assembly, aerial	76-1472
Mounts, rubber, gang mounting (3)	27-4771-1
Pilot lamp assembly	27-6233-6
Shield, pilot lamp	56-6307-4FA3
Socket, Loktal (4)	27-6207
Socket, octal	27-6174

©John F. Rider

Compliments of www.nucow.com

MODELS 51-629, 51-632

SPECIFICATIONS

CABINET ..... Plastic, portable

CIRCUIT ..... Four-tube superheterodyne plus selenium rectifier

FREQUENCY RANGE ..... 540—1620 kc.

AUDIO OUTPUT
- A-C Operation ..... 150 mw.
- Battery Operation ..... 150 mw.

OPERATING VOLTAGE ..... 117 volts, a.c./d.c., or 1.5-volt "A" and 90-volt "B" battery

POWER CONSUMPTION
- A-C Operation ..... 11 watts
- Battery Operation ..... 13 ma. from 90-volt "B"; 250 ma. from 1.5-volt "A"

AERIAL ..... Built-in high-impedance loop; provision for connecting external aerial.

INTERMEDIATE FREQUENCY ..... 455 kc.

PHILCO TUBES (4) ..... 1R5 converter, 1U4 i-f ampl., 1U5 det.-a.v.c.-1st audio, 3V4 output

BATTERY TYPE P-364

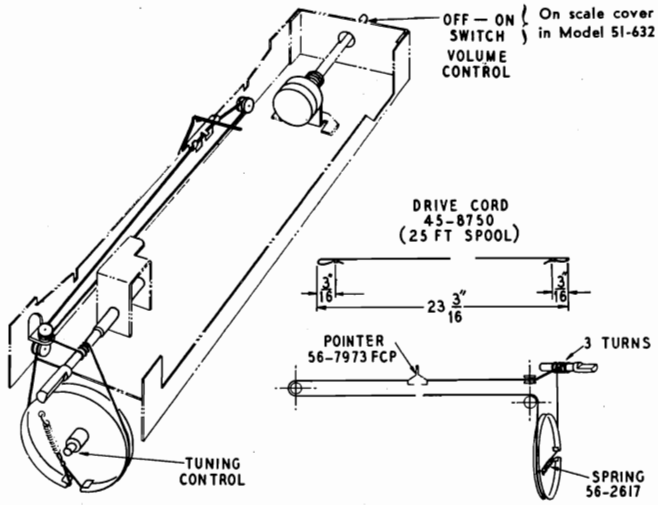

Figure 1. Drive-Cord Installation Details

STEP	SIGNAL GENERATOR		RADIO		ADJUST
	CONNECTION TO RADIO	DIAL SETTING	DIAL SETTING	SPECIAL INSTRUCTIONS	
1	Through .1-μf. condenser to antenna section of tuning condenser.	455 kc.	Tuning gang fully meshed	Adjust, in order given, for maximum output.	TC4—2nd i-f sec. TC3—1st i-f sec. TC2—1st i-f pri.
2	Radiating loop. See note below.	1620 kc.	1620 kc.	Adjust for maximum output.	C1B—osc. trimmer C1A—aerial trimmer
3	Same as step 2.	535 kc.	Tuning gang fully meshed	Adjust for maximum output; then repeat steps 2 and 3 until no further increase in output is obtained. This step SHOULD NOT be necessary unless the oscillator transformer has been replaced.	TC1—osc. core

RADIATING LOOP: Make up a six-to-eight turn, 6-inch-diameter loop, using insulated wire; connect to signal-generator leads, and place near radio loop aerial.

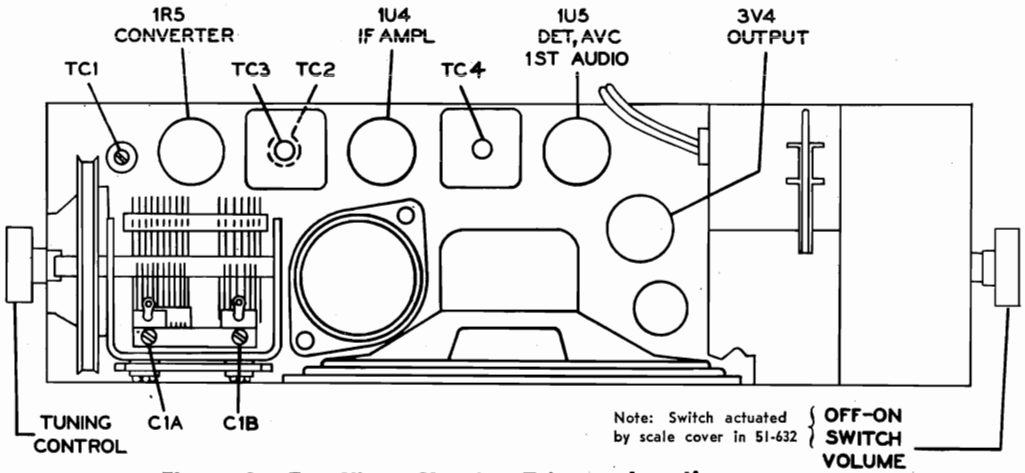

Figure 2. Top View, Showing Trimmer Locations

ALIGNMENT PROCEDURE

DIAL POINTER—With tuning-condenser plates fully meshed, set pointer to coincide with first index hole above pointer.

OUTPUT METER—Connect across speaker voice coil terminals.

SIGNAL GENERATOR—Connect signal generator as indicated in chart. Use modulated output.

RADIO CONTROLS—Set volume control to maximum. Set tuning control and signal-generator frequency as indicated in chart.

©John F. Rider

Compliments of www.nucow.com

MODELS 51-629,
51-632

OUTPUT LEVEL—During alignment, signal-generator output must be attenuated to maintain output-meter reading below .5 volt.

NOTE: While the radio is being aligned, the batteries (if used) should be in the same position with respect to the chassis and loop as they are in the cabinet.

REPLACEMENT PARTS LIST

NOTE: Part numbers identified by an asterisk (*) are general replacement items. These numbers may not be identical with those on factory parts; also, the electrical values of some replacement items may differ from the values indicated in the schematic diagram and parts list. The values substituted in any case are so chosen that the operation of the radio will be either unchanged or improved. When ordering replacements, use only the "Service Part No."

Reference Symbol	Description	Service Part No.
C1	Condenser, tuning gang, 2-section	
	Model 51-629	31-2735-3
	Model 51-632	31-2735-2
C1A	Condenser, trimmer, antenna	Part of C1
C1B	Condenser, trimmer, oscillator	Part of C1
C2	Condenser, neutralizing, 1.5 $\mu\mu f.$	30-1221-3
C3	Condenser, a-v-c by-pass, .05 $\mu f.$	61-0122*
C4	Condenser, i-f by-pass, .1 $\mu f.$	61-0113*
C5	Condenser, d-c blocking, 47 $\mu\mu f.$	62-051009001*
C6	Condenser, dual ceramic	30-1239
C6A	Condenser, osc. B+ by-pass, .004 $\mu f.$	Part of C6
C6B	Condenser, grid by-pass, .004 $\mu f.$	Part of C6
C7	Condenser, temperature compensation, 7.5 $\mu\mu f.$	30-1224-65
C8	Condenser, filament by-pass, .22 $\mu f.$	45-3505-49
C9	Condenser, neutralizing, 2.2 $\mu\mu f.$	30-1221-4
C10	Condenser, ceramic, 4-section	30-1237
C10A	Condenser, d-c blocking, .001 $\mu f.$	Part of C10
C10B	Condenser, screen by-pass, .01 $\mu f.$	Part of C10
C10C	Condenser, d-c blocking, .002 $\mu f.$	Part of C10
C10D	Condenser, grid by-pass, 220 $\mu\mu f.$	Part of C10
C11	Condenser, tone compensation, .004 $\mu f.$	61-0179*
C12	Condenser, electrolytic, filament by-pass, 50 $\mu f.$, 25v	30-2417-12
C13	Condenser, electrolytic, 3-section	30-2568-39
C13A	Condenser, filter, 40 $\mu f.$, 150v	Part of C13
C13B	Condenser, filter, 10 $\mu f.$, 150v	Part of C13
C13C	Condenser, filter, 50 $\mu f.$, 150v	Part of C13
C14	Condenser, line by-pass, .047 $\mu f.$	45-3505-45*
CR1	Selenium rectifier, 75 ma. at 117 volts	34-8003-1*
LA1	Loop aerial	
	Model 51-629 (flat loop)	32-4052-52
	Model 51-632 (Magna core)	32-4455-1
LS1	Speaker, 4-inch p-m	38-1627-11
R1	Resistor, grid return, 3.3 megohms	66-5338340*
R2	Resistor, grid return, 100,000 ohms	66-4108340*
R3	Resistor, bias, 680 ohms	66-1688340*
R4	Resistor, leakage, 150,000 ohms	66-4158340*
R5	Resistor, oscillator dropping, 22,000 ohms	66-3228340*
R6	Resistor, grid return, 3.3 megohms	66-5338340*
R7	Resistor, a-v-c filter, 2.2 megohms	66-5228340*
R8	Volume control, 1 megohm	
	Model 51-629 (with "off-on" switch)	33-5566-21
	Model 51-632 (control only)	33-5565-23
R9	Resistor, grid return, 4.7 megohms	66-5478340*
R10	Resistor, screen dropping, 4.7 megohms	66-5478340*
R11	Resistor, plate load, 1 megohm	66-5108340*
R12	Resistor, grid return, 2.2 megohms	66-5228340*
R13	Resistor, bias, 820 ohms	66-1828340*
R14	Resistor, filament dropping and filter, 2100 ohms (center-tapped)	33-3445
R15	Resistor, filter, 820 ohms	66-1828340*
R16	Resistor, current limiting, 120 ohms	33-1334-14
R17	Resistor, bias, 1500 ohms	66-2158340*
R18	Resistor, bias, 330 ohms	66-1338340*
S1	Switch, off-on	
	Model 51-629	Part of R8
	Model 51-632	42-1941
T1	Transformer, oscillator	32-4453
T2	Transformer, output	32-8434
W1	Line cord	41-3821-6*
WS	Wafer switch, voltage change-over	42-1925
Z1	Transformer, 1st i-f	32-4160-4A
Z2	Transformer, 2nd i-f	32-4454-1A

MISCELLANEOUS

Description	Service Part No.
Cabinet (Maroon), 51-629	10816
Back, maroon	54-4810
Cabinet (Green), 51-629	10816-1
Back, green	54-4810-1
Clip, back (2)	56-3807
Fastener, back (2)	1W60660FE7
Handle and bracket assembly	76-6198
Hinge (2)	56-7968
Knob (2)	76-6206
Pointer	56-7973-1FCP
Scale, dial	54-5098
Clip (2), scale mounting	56-8449FA3
Cabinet (Maroon), 51-632	10815
Back	54-4806
Baffle and cloth assembly	40-7924
Clip, back (2)	56-3807-3
Cover and lid assembly	76-6146
Fastener, back (2)	1W60660FE7
Handle	76-6177
Hinge (2)	56-7968
Knob and escutcheon assembly (2)	76-6210
Pointer	56-7973-1FCP
Scale, dial	54-5097
Cable and plug, battery	41-3477-2
Insulator, electrolytic-condenser mounting	27-9508
Mount, rubber, tuning gang (3)	27-4099-3
Spring, drive cord	56-2617
Socket, tube, 1R5 and 1U4 (2)	27-6203
Socket, tube, 1U5 and 3V4 (2)	27-6203-12
Tube shield, 1U5	56-3978-1FA3
Tuning shaft	56-7906FA42
Retaining ring	1W60978FA3

©John F. Rider

Compliments of www.nucow.com

MODELS 51-629, 51-632

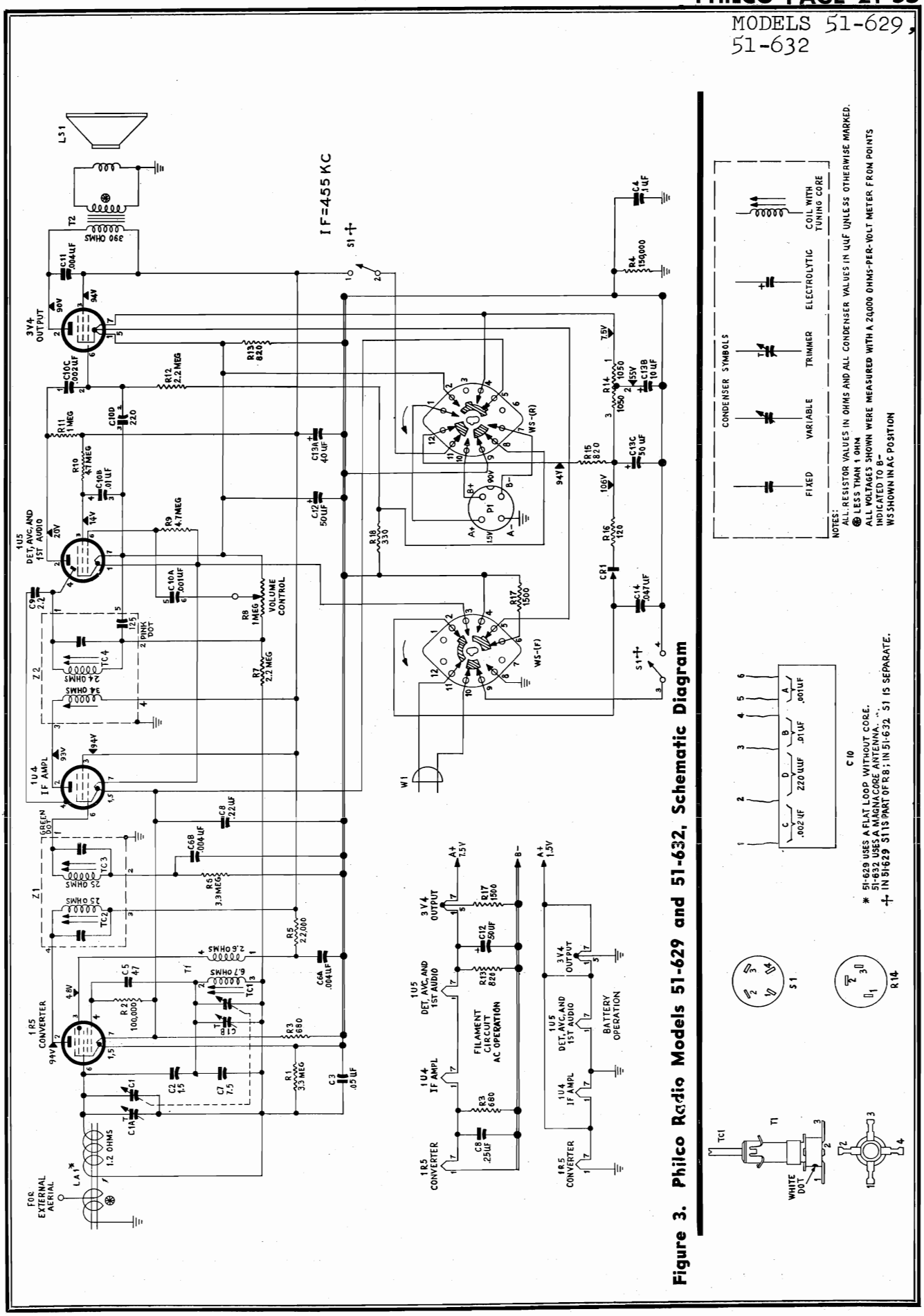

Figure 3. Philco Radio Models 51-629 and 51-632, Schematic Diagram

©John F. Rider

Compliments of www.nucow.com

MODEL 51-631

SPECIFICATIONS

CABINET ..... Plastic, personal portable

CIRCUIT ..... Four-tube superheterodyne plus selenium rectifier

FREQUENCY RANGE ..... 540—1620 kc.

AUDIO OUTPUT
- A-C Operation ..... 150 mw.
- Battery Operation ..... 75 mw.

OPERATING VOLTAGE ..... 117 volts, a.c./d.c., or 1.5-volt "A" battery and 67.5-volt "B" battery

POWER CONSUMPTION
- A-C Operation ..... 11 watts
- Battery Operation ..... 9.5 ma. from 67.5-volt "B" battery; 250 ma. from 1.5-volt "A" battery

AERIAL ..... Built-in high-impedance loop with iron core; provision for connecting external aerial.

INTERMEDIATE FREQUENCY ..... 455 kc.

PHILCO TUBES (4) ..... 1R5 converter, 1U4 i-f ampl., 1U5 det.-a.v.c.-1st audio, 3V4 output

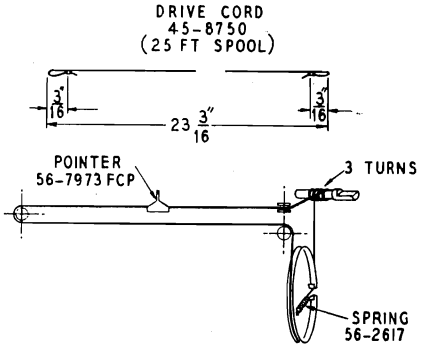

ALIGNMENT PROCEDURE

RADIO CONTROLS—Set volume control to maximum. Set tuning control and signal-generator frequency as indicated in chart.

OUTPUT LEVEL—During alignment, signal-generator output must be attenuated to maintain output-meter reading below .5 volt.

NOTE: While the radio is being aligned, the batteries (if used) should be in the same position with respect to the chassis and loop as they are in the cabinet.

DIAL POINTER—With tuning-condenser plates fully meshed, set pointer to coincide with first index hole above pointer.

OUTPUT METER—Connect across speaker voice coil terminals.

SIGNAL GENERATOR—Connect signal generator as indicated in chart. Use modulated output.

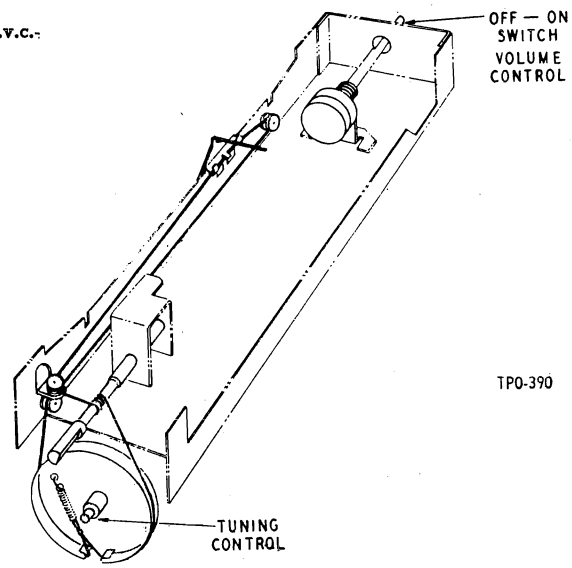

Figure 1. Drive-Cord Installation Details

STEP	SIGNAL GENERATOR		RADIO		ADJUST
	CONNECTION TO RADIO	DIAL SETTING	DIAL SETTING	SPECIAL INSTRUCTIONS	
1	Through .1-μf. condenser to antenna section of tuning condenser.	455 kc.	Tuning gang fully meshed	Adjust, in order given, for maximum output.	TC5—2nd i-f sec. TC4—2nd i-f pri. TC3—1st i-f sec. TC2—1st i-f pri.
2	Radiating loop. See note below.	1620 kc.	1620 kc.	Adjust for maximum output.	C1B—osc. trimmer C1A—aerial trimmer
3	Same as step 2.	535 kc.	Tuning gang fully meshed	Adjust for maximum output; then repeat steps 2 and 3 until no further increase in output is obtained. This step SHOULD NOT be necessary unless the oscillator transformer has been replaced.	TC1—osc. core

RADIATING LOOP: Make up a six-to-eight turn, 6-inch-diameter loop, using insulated wire; connect to signal-generator leads, and place near radio loop aerial.

©John F. Rider

Compliments of www.nucow.com

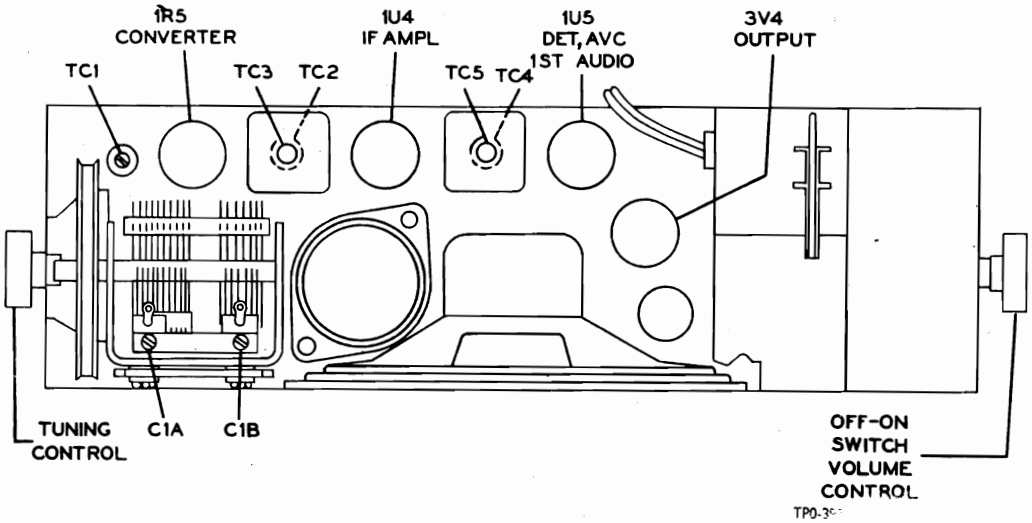

Figure 2. Top View, Showing Trimmer Locations

REPLACEMENT PARTS LIST

NOTE: Part numbers identified by an asterisk (*) are general replacement items. These numbers may not be identical with those on factory parts; also, the electrical values of some replacement items may differ from the values indicated in the schematic diagram and parts list. The values substituted in any case are so chosen that the operation of the radio will be either unchanged or improved. When ordering replacements, use only the "Service Part No."

Reference Symbol	Description	Service Part No.
C1	Condenser, tuning gang, 2-section	31-2735-2
C1A	Condenser, trimmer, antenna	Part of C1
C1B	Condenser, trimmer, oscillator	Part of C1
C2	Condenser, neutralizing, 1.5 $\mu\mu f.$	30-1221-3
C3	Condenser, a-v-c by-pass, .05 $\mu f.$	61-0122*
C4	Condenser, i-f by-pass, .1 $\mu f.$	61-0113*
C5	Condenser, d-c blocking, 47 $\mu\mu f.$	62-051009001*
C6	Condenser, dual ceramic	30-1239
C6A	Condenser, osc. B+ by-pass, .004 $\mu f.$	Part of C6
C6B	Condenser, grid by-pass, .004 $\mu f.$	Part of C6
C7	Condenser, temperature compensation, 7.5 $\mu\mu f.$	30-1224-65
C8	Condenser, filament by-pass, .22 $\mu f.$	45-3505-49
C9	Condenser, neutralizing, 2.2 $\mu\mu f.$	30-1221-4
C10	Condenser, ceramic, 4-section	30-1237
C10A	Condenser, d-c blocking, .001 $\mu f.$	Part of C10
C10B	Condenser, screen by-pass, .01 $\mu f.$	Part of C10
C10C	Condenser, d-c blocking, .002 $\mu f.$	Part of C10
C10D	Condenser, grid by-pass, 220 $\mu\mu f.$	Part of C10
C11	Condenser, tone compensation, .004 $\mu f.$	61-0179*
C12	Condenser, electrolytic, filament by-pass, 50 $\mu f.$, 25v	30-2417-12
C13	Condenser, electrolytic, 3-section	30-2568-39
C13A	Condenser, filter, 40 $\mu f.$, 150v	Part of C13
C13B	Condenser, filter, 10 $\mu f.$, 150v	Part of C13
C13C	Condenser, filter, 50 $\mu f.$, 150v	Part of C13
C14	Condenser, line by-pass, .047 $\mu f.$	45-3505-45*
CR1	Selenium rectifier, 75 ma. at 117 volts	34-8003-1*
LA1	Loop aerial	32-4455
LS1	Speaker, 4-inch p-m	36-1637
R1	Resistor, grid return, 3.3 megohms	66-5338340*
R2	Resistor, grid return, 100,000 ohms	66-4108340*
R3	Resistor, bias, 680 ohms	66-1688340*
R4	Resistor, leakage, 150,000 ohms	66-4158340*
R5	Resistor, oscillator dropping, 22,000 ohms	66-3228340*
R6	Resistor, grid return, 3.3 megohms	66-5338340*
R7	Resistor, a-v-c filter, 2.2 megohms	66-5228340*
R8	Volume control (with off-on switch) 1 megohm	33-5566-21
R9	Resistor, grid return, 4.7 megohms	66-5478340*
R10	Resistor, screen dropping, 4.7 megohms	66-5478340*
R11	Resistor, plate load, 1 megohm	66-5108340*
R12	Resistor, grid return, 2.2 megohms	66-5228340*
R13	Resistor, bias, 820 ohms	66-1828340*
R14	Resistor, filament dropping and filter, 2100 ohms (center-tapped)	33-3445
R15	Resistor, filter, 820 ohms	66-1828340*
R16	Resistor, current limiting, 120 ohms	33-1334-14
R17	Resistor, bias, 1500 ohms	66-2158340*
R18	Resistor, bias, 330 ohms	66-1338340*
S1	Switch, off-on	Part of R8
T1	Transformer, oscillator	32-4453
T2	Transformer, output	32-8434
W1	Line cord	4-3821-6*
WS	Wafer switch, voltage change-over	42-1925
Z1	Transformer, 1st i-f	32-4160-4A
Z2	Transformer, 2nd i-f	32-4454-1A

MISCELLANEOUS

Description	Service Part No.
Cabinet	10799
Baffle and cloth assembly	40-7884
Fastener (4)	W2235-7FA9
Battery holder and loop assembly	76-5740
Battery cradle and rivet assembly	76-5815
Handle	56-7940FCP
Bushing (2)	54-4776
Hinge (l.h.)	56-7915
Hinge (r.h.)	56-7915-1
Screw (2)	W2537-15FA1
Knob (2)	54-4773
Pointer	56-7973FCP
Scale	54-5087
Cable and connector assembly, battery	41-3988
Insulator, electrolytic-condenser mounting	27-9509
Mount, rubber, tuning gang (3)	27-4099-3
Spring, drive cord	56-2617
Socket, tube, 1R5 and 1U4 (2)	27-6203
Socket, tube, 1U5 and 3V4 (2)	27-6203-12
Tube shield, 1U5	56-3978-1FA3
Tuning shaft	56-7906FA42

©John F. Rider

Compliments of www.nucow.com

MODEL 51-631

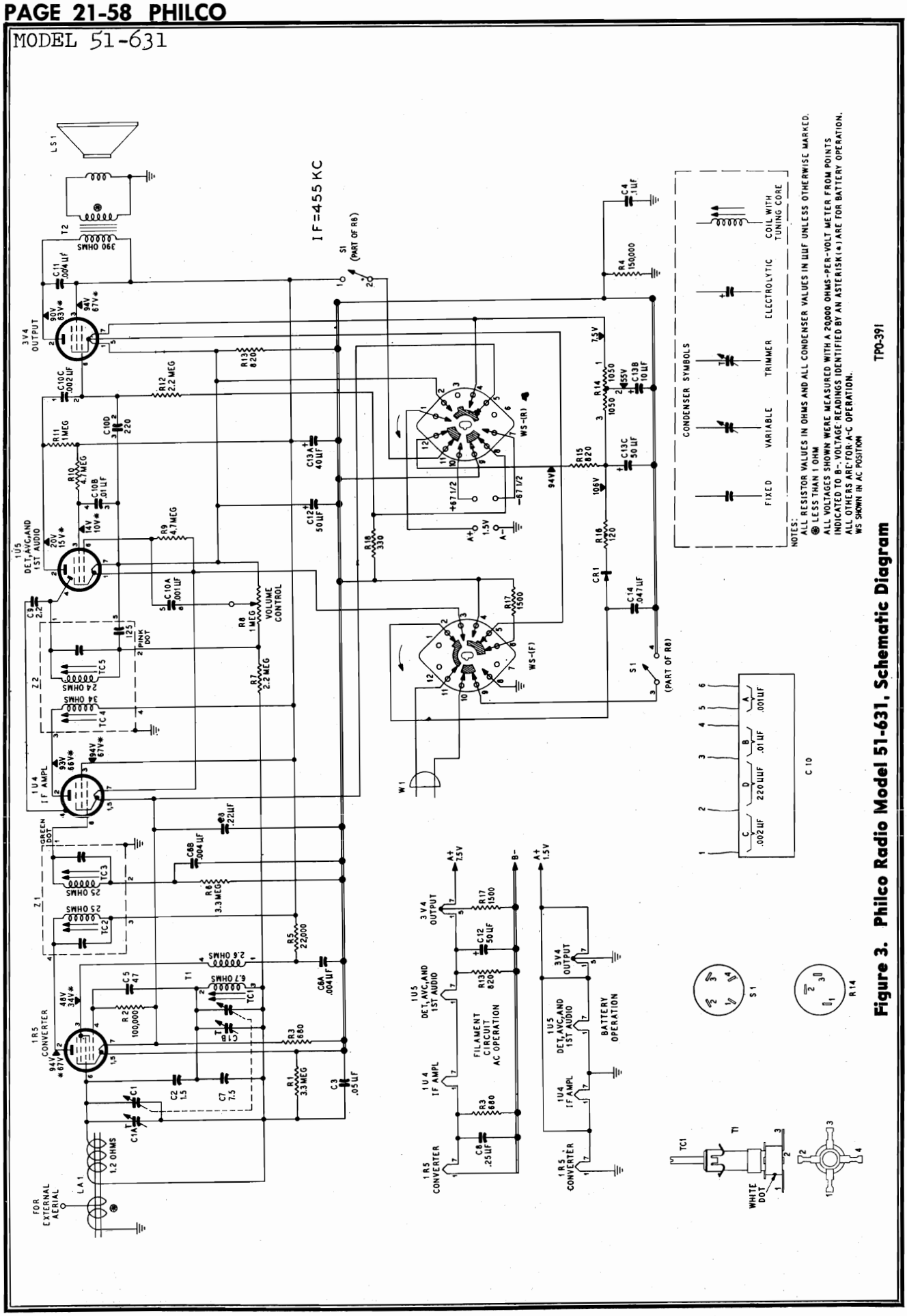

Figure 3. Philco Radio Model 51-631, Schematic Diagram

©John F. Rider

Compliments of www.nucow.com

MODELS 51-930, 51-931, 51-932

SPECIFICATIONS

CABINET

Model 51-930	Molded plastic, mahogany and gray, wide-angle dial
Model 51-931	Molded plastic, ivory, wide-angle dial
Model 51-932	Molded plastic, maroon, wide-angle dial
CIRCUIT	6-tube superheterodyne
FREQUENCY RANGE	540—1620 kc.
AUDIO OUTPUT	1 watt
OPERATING VOLTAGE	105—120 volts, a.c. or d.c.
POWER CONSUMPTION	30 watts
AERIAL	Built-in, high-impedance loop; provision for connection of external aerial
INTERMEDIATE FREQUENCY	455 kc.
PHILCO TUBES (6)	7B7 r-f ampl., 7A8 converter, 7B7 i-f ampl., 14B6 det.—1st audio—a.v.c., 35L6GT output, 35Z5GT rectifier

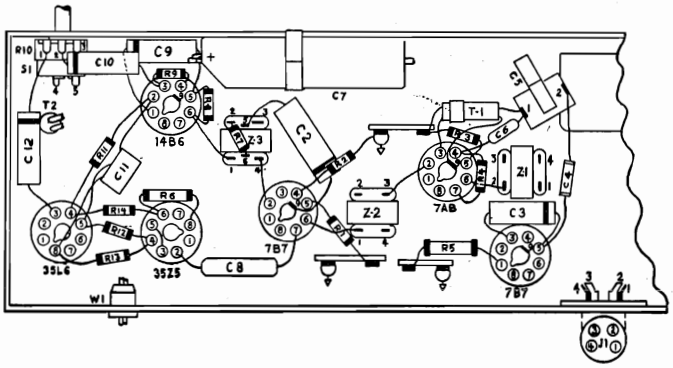

Figure 1. Symbolized Chassis, Showing Parts Placement

ALIGNMENT PROCEDURE

DIAL POINTER: Turn tuning condenser to full-mesh position. Adjust pointer so that center of pointer carriage coincides with first scribe line from the left.

OUTPUT LEVEL: During alignment, attenuate signal-generator output to maintain an output-meter indication of 1.25 volts.

OUTPUT METER: Connect across speaker voice coil.

SIGNAL GENERATOR: Connect as indicated in chart. Use modulated output.

VOLUME CONTROL: Set to maximum.

CRITICAL DRESS: The green lead from the osc. section of C1 to C5 must be dressed away from the chassis, with all excess under the chassis.

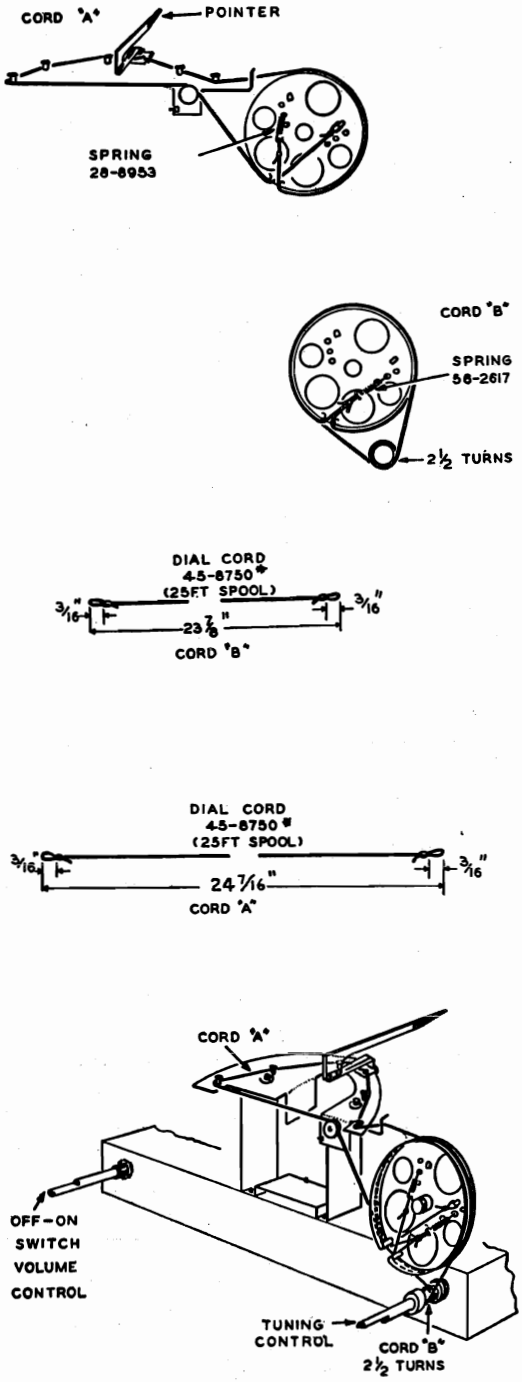

Figure 2. Dial-Cord Installation Details

©John F. Rider

Compliments of www.nucow.com

MODELS 51-930,
51-931, 51-932

ALIGNMENT CHART

STEP	SIGNAL GENERATOR		RADIO		ADJUST
	CONNECTION TO RADIO	DIAL SETTING	DIAL SETTING	SPECIAL INSTRUCTIONS	
1	Through a .1-μf. condenser to stator of r-f section of gang. Ground lead to B–.	455 kc.	Gang fully meshed	Adjust, in order given, for maximum output.	TC5—2nd i-f sec. TC4—2nd i-f pri. TC3—1st i-f sec. TC2—1st i-f pri.
2	Radiating loop. (See note below.)			Preset 1/2 turn from tight.	C5—osc. series
3	Same as step 2.	1620 kc.	1620 kc.	Adjust for maximum.	C1B—osc. shunt
4	Same as step 2.	1500 kc.	1500 kc.	Adjust for maximum.	C1C—r-f C1A—aerial
5	Same as step 2.	580 kc.	580 kc.	Adjust for maximum while rocking tuning control.	C5—osc. series TC1—r-f core
6	Repeat steps 3 and 4.				

RADIATING LOOP:

Make up a 6—8 turn, 6-inch-diameter loop from insulated wire; connect to signal-generator leads and place near radio loop aerial. The loop aerial must be connected to the radio.

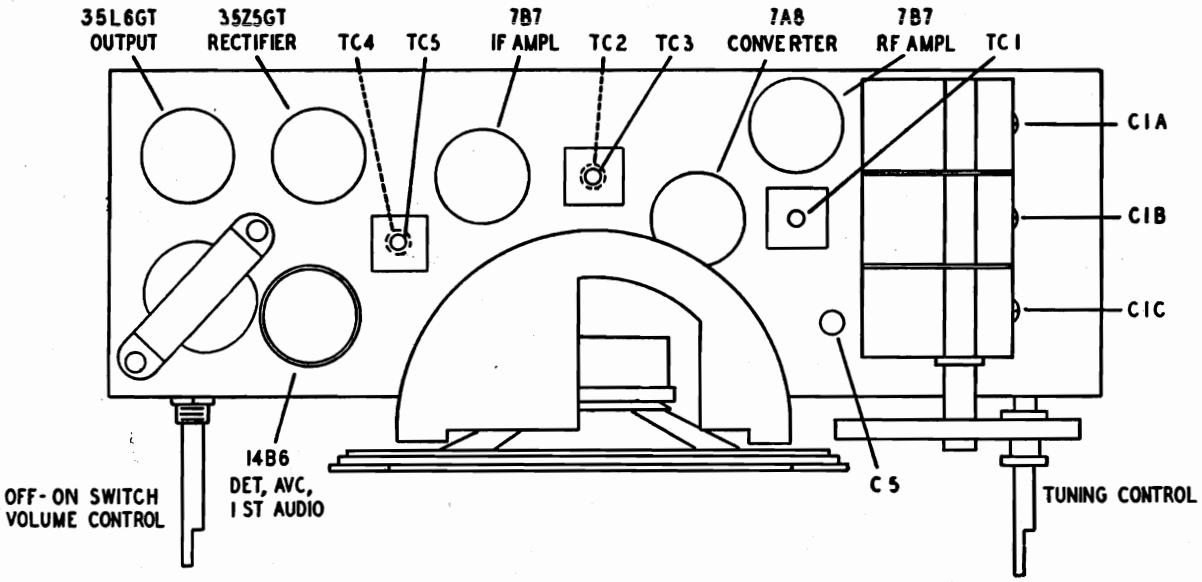

Figure 3. Top View, Showing Trimmer Locations

©John F. Rider

Compliments of www.nucow.com

MODELS 51-930,
51-931, 51-932

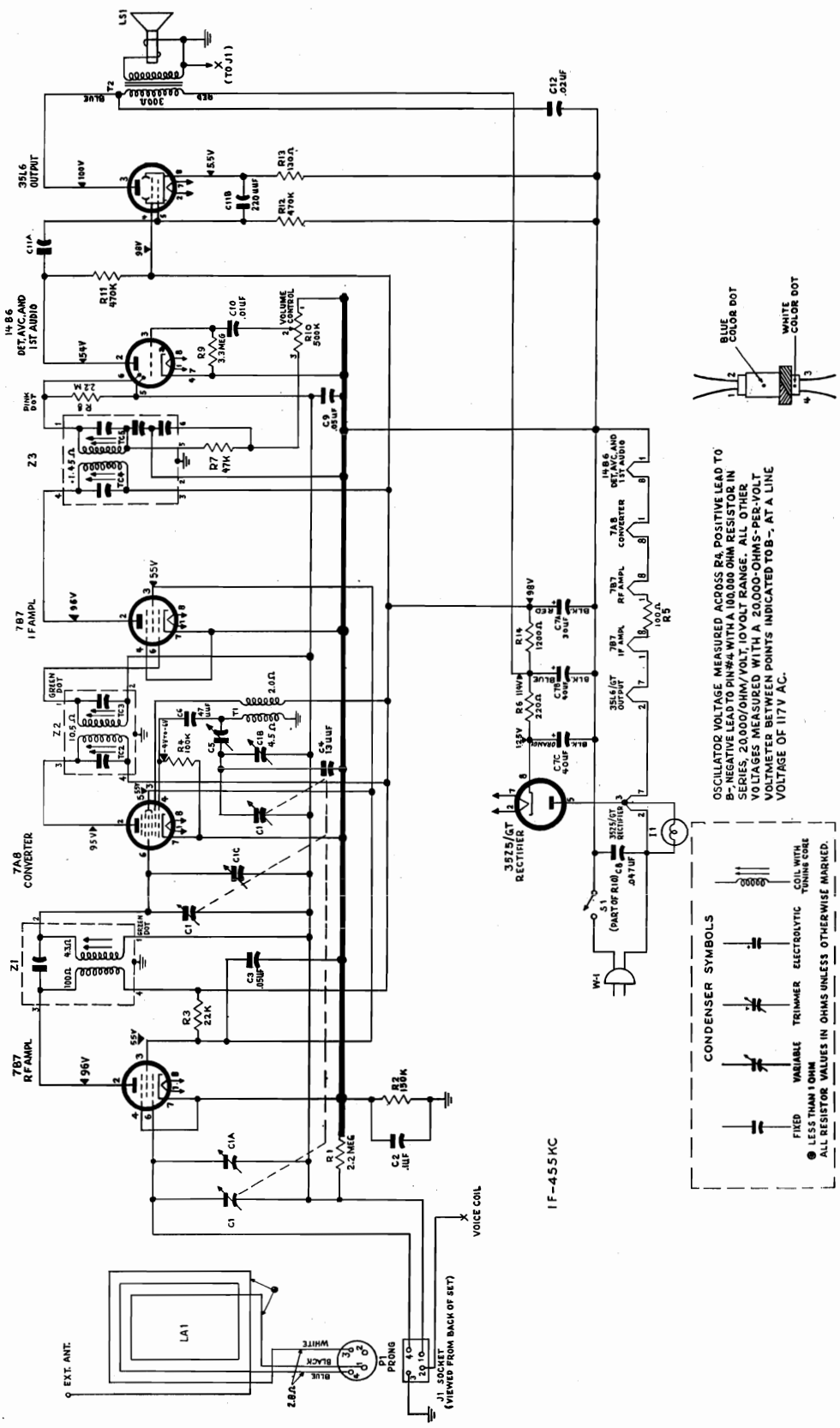

Figure 4. Philco Radio Models 51-930, 51-931, and 51-932, Schematic Diagram

©John F. Rider

Compliments of www.nucow.com

MODELS 51-930,
51-931, 51-932

REPLACEMENT PARTS LIST

NOTE: Part numbers marked with an asterisk (*) are general replacement items. These numbers may not be identical with those on factory parts; also, the electrical values of some replacement items may differ from the values indicated in the schematic diagram and parts list. The values substituted in any case are so chosen that the operation of the radio will be either unchanged or improved. When ordering replacements, use only the "Service Part No."

Reference Symbol	Description	Service Part No.
C1	Condenser, tuning, 3-section	31-2748-1
C1A	Condenser, trimmer, aerial	Part of C1
C1B	Condenser, trimmer, osc.	Part of C1
C1C	Condenser, trimmer, r-f	Part of C1
C2	Condenser, by-pass, .1 $\mu f.$	61-0113*
C3	Condenser, by-pass, .05 $\mu f.$	61-0122*
C4	Condenser, fixed trimmer, temperature comp., 13 $\mu\mu f.$	30-1224-68
C5	Condenser, padder, osc. series	31-6473-17
C6	Condenser, d-c blocking, 47 $\mu\mu f.$	60-00475417
C7	Condenser, electrolytic, 3-section	30-2575-27
C7A	Condenser, filter, 30 $\mu f.$, 150v	Part of C7
C7B	Condenser, filter, 40 $\mu f.$, 150v	Part of C7
C7C	Condenser, filter, 40 $\mu f.$, 150v	Part of C7
C8	Condenser, line by-pass, .047 $\mu f.$	45-3505-45
C9	Condenser, a-v-c filter, .05 $\mu f.$	61-0122*
C10	Condenser, d-c blocking, .01 $\mu f.$	61-0120*
C11	Condenser, dual ceramic	30-1239-4
C11A	Condenser, d-c blocking, .007 $\mu f.$	Part of C11
C11B	Condenser, by-pass, 220 $\mu\mu f.$	Part of C11
C12	Condenser, tone compensation, .02 $\mu f.$	61-0108*
I1	Pilot lamp, 6—8v	34-2676
J1	Jack, aerial input	27-6214-1
LA1	Loop aerial, 50-930	32-4052-39
LA1	Loop aerial, 50-931 or 50-932	32-4052-40
LS1	Speaker, p-m, 4 in. x 6 in., oval	36-1633-3
P1	Loop-aerial plug	27-4788
R1	Resistor, a-v-c load, 2.2 megohms	66-5228340*
R2	Resistor, leakage, 150,000 ohms	66-4158340*
R3	Resistor, dropping, 22,000 ohms	66-3228340*
R4	Resistor, grid return, 100,000 ohms	66-4108340*
R5	Resistor, filament dropping, 100 ohms	33-1343-3
R6	Resistor, filter, 220 ohms, 1w	66-1224340*
R7	Resistor, i-f filter, 47,000 ohms	66-3478340*
R8	Resistor, diode load, 2.2 megohms	66-5228340*
R9	Resistor, grid return, 3.3 megohms	66-5338340*
R10	Volume control, 500,000 ohms, with off-on switch	33-5566-13
R11	Resistor, plate load, 470,000 ohms	66-4478340*
R12	Resistor, grid return, 470,000 ohms	66-4478340*
R13	Resistor, cathode bias, 130 ohms	66-1128340*
R14	Resistor, filter, 1200 ohms, 1 watt	66-2124340*
S1	Switch, off-on	Part of R10
T1	Transformer, oscillator	32-4263-3
T2	Transformer, output	32-8310-3
W1	Line cord	L-2183*
Z1	Transformer, r-f	32-4399-2A
Z2	Transformer, 1st i-f	32-4160A
Z3	Transformer, 2nd i-f	32-4240-3A

MISCELLANEOUS

Description	Service Part No.
Cabinet, 50-930 (mahogany)	10770-2
Cabinet, 50-930 (gray)	10770-3
Back	318-3020
Fastener, back (4)	W-2235FA9
Backplate, ornamental, mahogany cabinet	56-7426FCP
Backplate, ornamental, gray cabinet	56-7426-1FCP
Fastener, backplate mtg.	W-2235-1FA9
Baffle and cloth assy.	40-7892
Fastener, baffle mtg. (4)	W-2235-2FA9
Bezel, metal	56-7427
Speed nut, bezel mtg. (2)	1W60196FE7
Dial scale, mahogany cabinet	54-5070-3
Dial scale, gray cabinet	54-5070-4
Clip, scale mtg.	36-7886FE9
Knob, mahogany cabinet (2)	54-4718-4
Knob, gray cabinet (2)	54-4718-7
Pointer	76-5341-1
Cabinet, 50-931	76-5378
Back	318-3021
Fastener, back (4)	W-2235FA9
Backplate, ornamental	56-7434-1
Fastener, backplate mtg.	W-2235-1FA9
Baffle, cardboard	54-7922
Fastener, baffle mtg. (4)	W-2235-2FA9
Dial scale	54-5071
Clip, dial mtg.	56-7808FE11
Knob (2)	54-4718-5
Pointer	76-5341-4
Cabinet, 50-932	10772
Back	318-3022
Fastener, back (4)	W-2235FA9
Backplate, ornamental	56-7435
Fastener, backplate mtg.	W-2235-1FA9
Baffle, cardboard	54-7919
Fastener, baffle mtg. (4)	W-2235-2FA9
Bezel, metal	56-7436
Speed nut, bezel mtg.	1W60196FE7
Dial scale	54-5072
Clip, dial mtg. (2)	56-7572FE11
Knob	54-4718-3
Pointer	76-5341-3
Backplate, pulley-and-clip assembly	76-5233
Clamp, electrolytic mtg.	56-1466FA5
Dial cord, 25-foot spool	45-8750*
Spring, gang drive	56-2617
Spring, pointer drive	28-8953
Drive shaft	76-3671-6
Bushing, drive shaft	27-9437
Spring, hairpin, drive shaft (2)	57-1468FA3
Panel, wiring, external aerial	38-9837
Panel, wiring, 4-lug	38-9161-1
Plug, aerial, 4-pin	27-4788
Rubber mount, gang mtg. (4)	27-4771-1
Shield, tube, 14B6	56-1566
Socket, Loktal	27-6207
Socket, octal	27-6174
Socket assembly, pilot lamp	27-6233-6

©John F. Rider

Compliments of www.nucow.com

MODEL 51-934

SPECIFICATIONS

CABINET	Plastic table model
CIRCUIT	Six-tube superheterodyne plus selenium rectifier
FREQUENCY RANGES	
Broadcast	540—1630 kc.
FM	88—108 mc.
AUDIO OUTPUT	1 watt
OPERATING VOLTAGE	105—125 volts, a.c./d.c.
POWER CONSUMPTION	35 watts
AERIAL	Built-in high-impedance loop for AM, line cord for FM; provision for connecting external aerial.
INTERMEDIATE FREQUENCY	
AM	455 kc.
FM	9.1 mc.
PHILCO TUBES (6)	12AU6 r-f ampl., 12AT7 converter, 12BA6 1st i-f ampl., 12AU6 2nd i-f ampl., 19C8 det.—a.v.c.—1st audio, 50C5 output

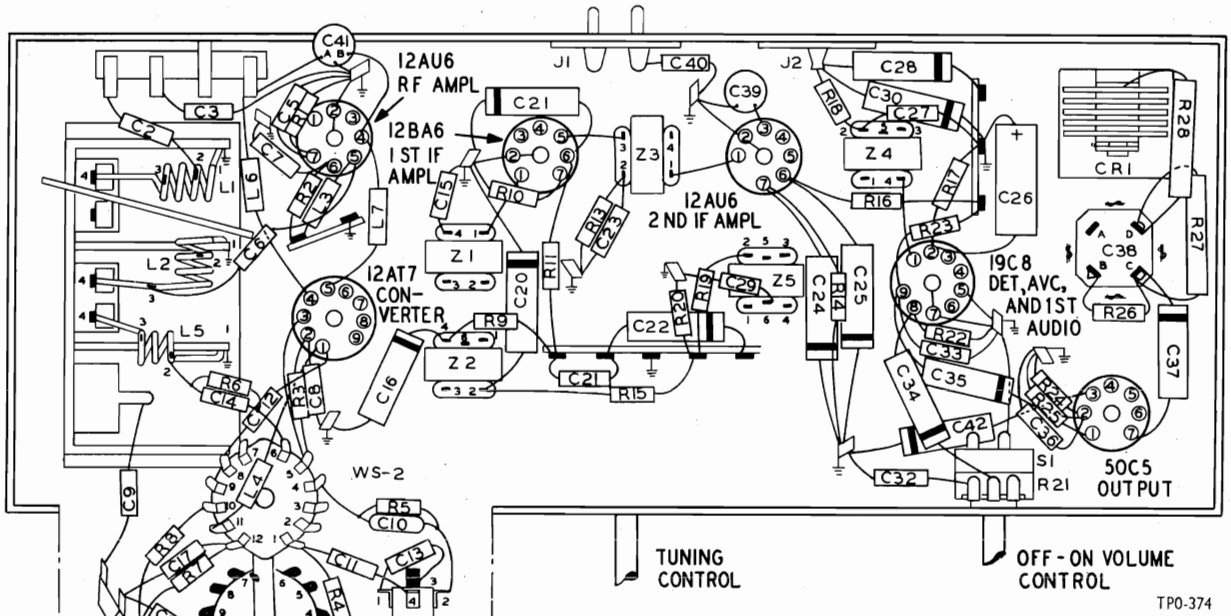

Figure 2. Symbolized Chassis, Showing Parts Placement

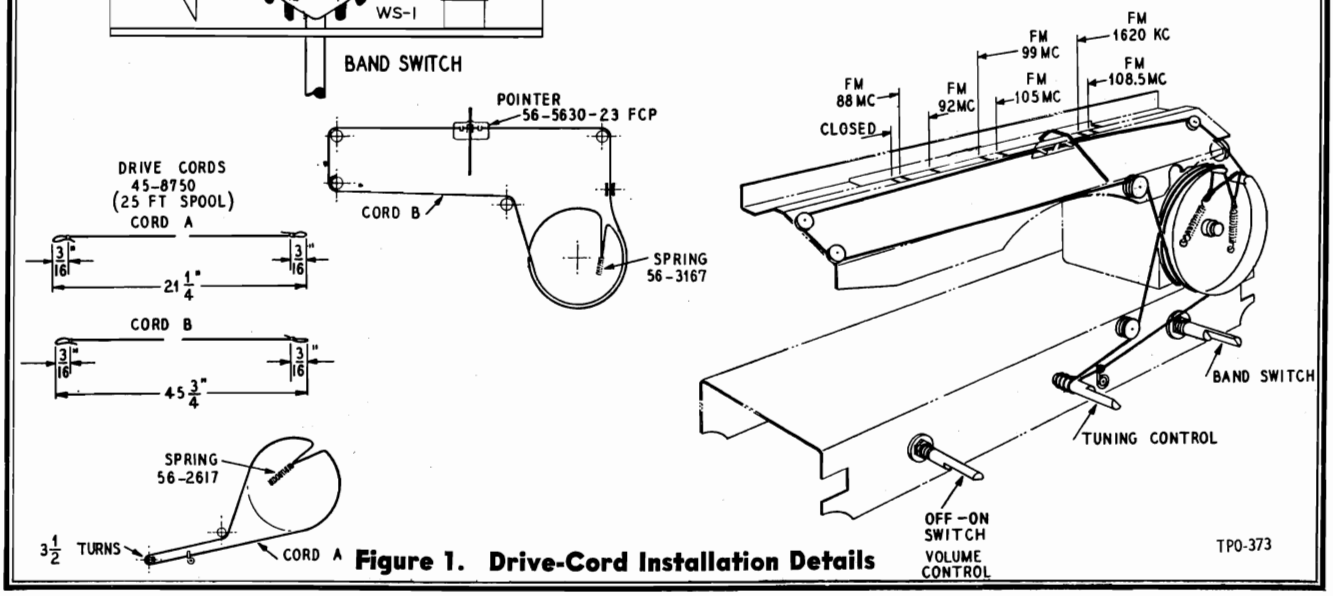

Figure 1. Drive-Cord Installation Details

©John F. Rider

Compliments of www.nucow.com

MODEL 51-934

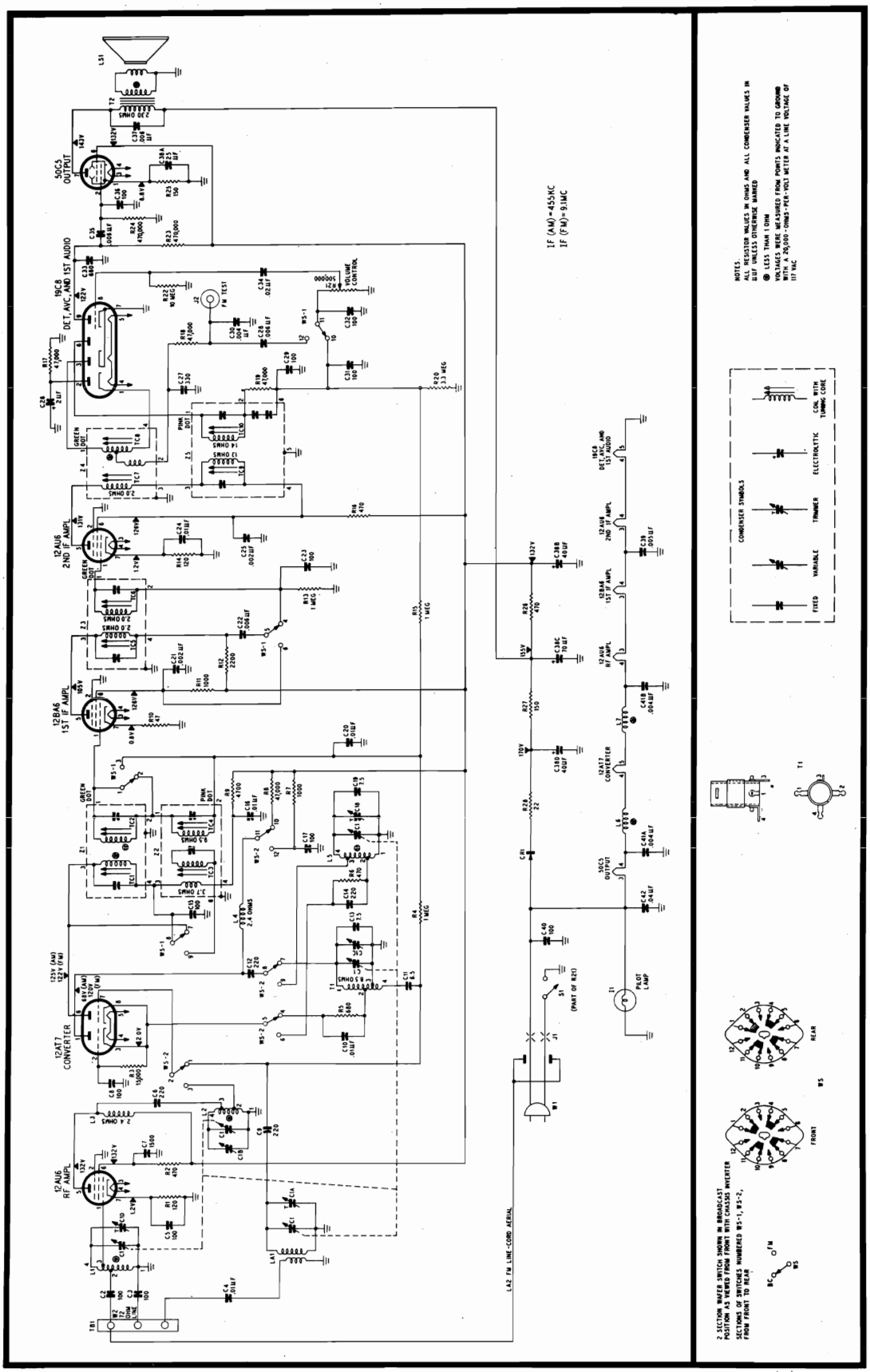

Figure 3. Philco Radio Model 51-934, Schematic Diagram

©John F. Rider

Compliments of www.nucow.com

MODEL 51-934

AM ALIGNMENT PROCEDURE

Make alignment with loop aerial connected to radio. The AM alignment should be completed before the FM alignment is made.

DIAL POINTER—With tuning-condenser plates fully meshed, adjust pointer to coincide with index mark at low-frequency end of dial backplate.

RADIO CONTROLS—Set volume control to maximum, set band switch for broadcast reception, and set tuning control as indicated in chart.

OUTPUT METER—Connect across voice-coil terminals.

SIGNAL GENERATOR—Use AM r-f signal generator, with modulated output. Connect generator and set frequency as indicated in chart.

OUTPUT LEVEL—During alignment, signal-generator output must be attenuated to hold output-meter reading below 1.25 volts.

AM ALIGNMENT CHART

STEP	SIGNAL GENERATOR		RADIO		ADJUST
	CONNECTION TO RADIO	DIAL SETTING	DIAL SETTING	SPECIAL INSTRUCTIONS	
1	Ground lead to chassis. Output lead through a .1-μf. condenser to mixer grid (pin 7) of 12AT7.	455 kc.	540 kc. (gang fully meshed)	Adjust for maximum output.	TC10—2nd AM i-f sec. TC9—2nd AM i-f pri. TC4—1st AM i-f sec. TC3—1st AM i-f pri.
2	Radiating loop. See note below.	1620 kc.	1600 kc.	Adjust for maximum output.	C1C—osc. trimmer
3	Same as step 2.	1500 kc.	1500 kc.	Adjust for maximum output.	C1A—aerial trimmer

RADIATING LOOP: Make up a six-to-eight-turn, 6-inch-diameter loop from insulated wire; connect to generator terminals, and place near radio loop aerial. Radio loop aerial must be connected.

FM ALIGNMENT PROCEDURE

Make AM alignment first.

RADIO CONTROLS—Set volume control to maximum, set band switch for FM reception, and set tuning control as indicated in chart.

OUTPUT METER—Connect across voice-coil terminals. (This meter is used only for step 3).

D-C VOLTMETER—Connect negative lead of d-c voltmeter (resistance of at least 20,000 ohms per volt) to pin 2 of 19C8 tube, and positive lead to chassis. Use 0—10-volt range.

SIGNAL GENERATOR—Use AM r-f signal generator, with modulated output. Connect ground lead to chassis. Connect output lead and set frequency as indicated in chart. Generator must have sufficient output to give reading of approximately 8.5 volts on d-c voltmeter; during alignment, generator output must be attenuated to hold meter reading at this value.

NOTE: Before starting FM alignment, allow radio and signal generator to warm up for 15 minutes.

FM ALIGNMENT CHART

STEP	SIGNAL GENERATOR		RADIO		ADJUST
	CONNECTION TO RADIO	DIAL SETTING	DIAL SETTING	SPECIAL INSTRUCTIONS	
1	Through a .1-μf. condenser to control grid (pin 1) of 12BA6 1st i-f ampl.	9.1 mc.	88 mc.	Adjust tuning cores for maximum reading on d-c voltmeter. Attenuate signal generator to maintain a reading of approximately 10 volts. Repeat adjustments until no further improvement is noted. After this step, do not disturb these tuning cores except as directed in step 3.	TC8—discriminator sec. TC7—discriminator pri. TC6—FM 2nd i-f sec. TC5—FM 2nd i-f pri.

©John F. Rider

Compliments of www.nucow.com

MODEL 51-934

FM ALIGNMENT CHART (Cont.)

STEP	SIGNAL GENERATOR		RADIO		ADJUST
	CONNECTION TO RADIO	DIAL SETTING	DIAL SETTING	SPECIAL INSTRUCTIONS	
2	Through a .1-μf. condenser to mixer grid (pin 7) of 12AT7.	9.1 mc.	88 mc.	Adjust tuning cores for maximum reading on d-c voltmeter. Repeat adjustments until no further improvement is noted. Do not disturb these tuning cores after this step.	TC2—FM 1st i-f sec. TC1—FM 1st i-f pri.
3	Same as step 1.	9.1 mc.	88 mc.	Adjust tuning core for minimum reading on output meter. This adjustment is critical; repeat to make certain it is correct.	TC8—discriminator sec.
4	To terminal 1 of TB1.	105 mc.	105 mc.	Adjust trimmer for maximum reading on d-c voltmeter.	C18—FM osc.
5	Same as step 4.	105 mc.	105 mc.	Same as step 4.	C1B—FM r-f C1D—FM aerial.
6	Same as step 4.	92 mc.	92 mc.	Adjust coil for maximum reading on d-c voltmeter.	L5—osc. (tracking)
7	Same as step 4.	92 mc.	92 mc.	Same as step 6.	L2—FM r-f (tracking) L1—FM aerial. (tracking)
8	Same as step 4.	105 mc.	105 mc.	Same as step 4.	C18—FM osc.
9	Repeat steps 4 through 8 until no further improvement is noted.				

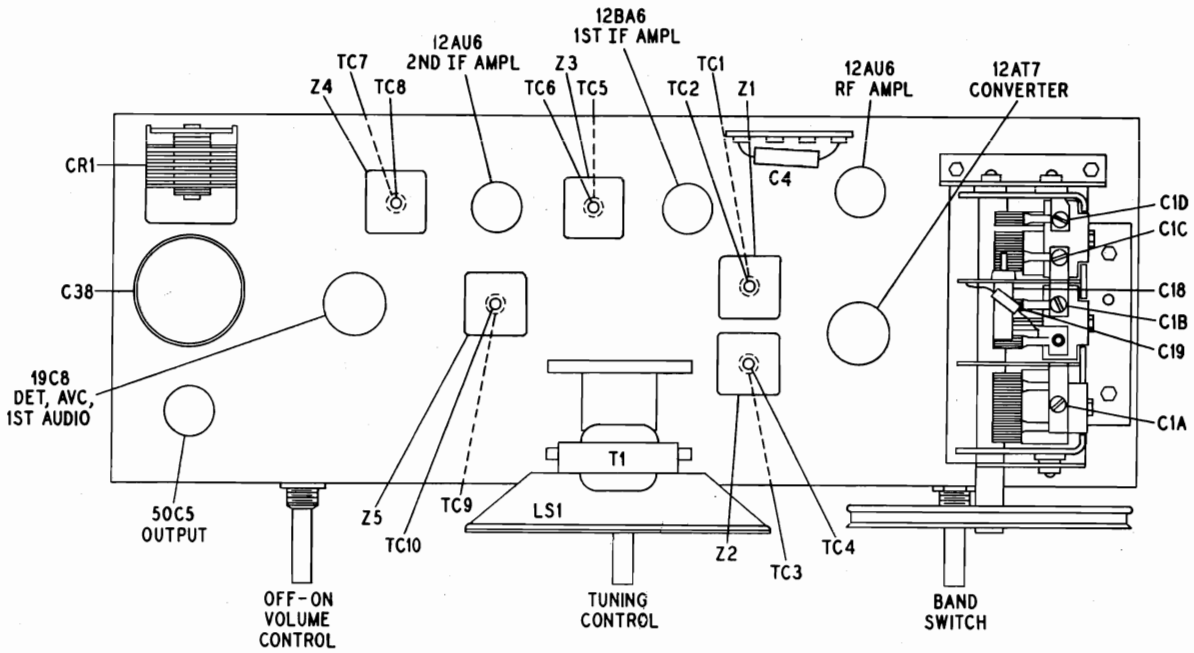

Figure 4. Top View, Showing Trimmer Locations

TPO-376

©John F. Rider

Compliments of www.nucow.com

MODEL 51-934

REPLACEMENT PARTS LIST

NOTE: Part numbers identified by an asterisk (*) are general replacement items. These numbers may not be identical with those on factory parts; also, the electrical values of some replacement items may differ from the values indicated in the schematic diagram and parts list. The values substituted in any case are so chosen that the operation of the radio will be either unchanged or improved. When ordering replacements, use only the "Service Part No."

Reference Symbol	Description	Service Part No.
C1	Condenser, tuning gang, 5-section	31-2756
C1A	Condenser, trimmer, BC aerial	Part of C1
C1B	Condenser, trimmer, FM r-f	Part of C1
C1C	Condenser, trimmer, BC oscillator	Part of C1
C1D	Condenser, trimmer, FM aerial	Part of C1
C2	Condenser, aerial isolating, 100 μμf.	62-110009001*
C3	Condenser, aerial isolating, 100 μμf.	62-110009001*
C4	Condenser, aerial isolating, .01 μf.	45-3505-41
C5	Condenser, cathode by-pass, 100 μμf.	62-110009001*
C6	Condenser, d-c blocking, 220 μμf.	62-122001001
C7	Condenser, screen by-pass, 1500 μμf.	62-215001011*
C8	Condenser, oscillator grid, 100 μμf.	62-110009001*
C9	Condenser, d-c blocking, 220 μμf.	62-122001001
C10	Condenser, d-c blocking, .01 μf.	30-1226-10
C11	Condenser, neutralizing, 6.5 μμf.	30-1224-6
C12	Condenser, d-c blocking, 220 μμf.	62-122001001
C13	Condenser, fixed trimmer, temperature compensating, 7.5 μμf.	30-1224-8
C14	Condenser, d-c blocking, 220 μμf.	62-122001001*
C15	Condenser, r-f by-pass, 100 μμf.	62-110009001*
C16	Condenser, plate decoupling, .01 μf.	30-4572
C17	Condenser, r-f by-pass, 100 μμf.	62-110009001*
C18	Condenser, trimmer, FM oscillator	31-6511
C19	Condenser, fixed trimmer, temperature compensating, 7.5 μμf.	30-1224-8
C20	Condenser, a-v-c decoupling, .01 μf.	30-4572
C21	Condenser, screen by-pass, .002 μf.	61-0062*
C22	Condenser, neutralizing, .006 μf.	45-3500-7*
C23	Condenser, i-f by-pass, 100 μμf.	62-110009001*
C24	Condenser, cathode by-pass, .01 μf.	30-4572
C25	Condenser, screen by-pass, .002 μf.	61-0062*
C26	Condenser, electrolytic diode-load filter, 2 μf., 50v	30-2417-7
C27	Condenser, i-f by-pass, 330 μμf.	62-133001001
C28	Condenser, d-c blocking, .006 μf.	45-3500-7*
C29	Condenser, i-f by-pass, 100 μμf.	62-110009001*
C30	Condenser, de-emphasis, .004 μf.	61-0179*
C31	Condenser, i-f by-pass, 100 μμf.	62-110009001*
C32	Condenser, i-f by-pass, 100 μμf.	62-110009001*
C33	Condenser, plate by-pass, 680 μμf.	62-168001001
C34	Condenser, d-c blocking, .02 μf.	61-0108*
C35	Condenser, d-c blocking, .006 μf.	61-0105*
C36	Condenser, grid by-pass, 100 μμf.	62-110009001*
C37	Condenser, tone compensation, .006 μf.	61-0105*
C38	Condenser, electrolytic, 4-section	30-2570-46
C38A	Condenser, cathode by-pass, 25 μf., 25v	Part of C38
C38B	Condenser, filter, 40 μf., 150v	Part of C38
C38C	Condenser, filter, 70 μf., 150v	Part of C38
C38D	Condenser, filter, 40 μf., 150v	Part of C38
C39	Condenser, filament by-pass, .005 μf.	30-1238-1
C40	Condenser, line by-pass, 100 μμf.	62-110009001*
C41	Condenser, ceramic, 2-section	30-1239
C41A	Condenser, filament by-pass, .004 μf.	Part of C41
C41B	Condenser, filament by-pass, .004 μf.	Part of C41
C42	Condenser, line by-pass, .04 μf.	45-3500
CR1	Selenium rectifier, 100 ma., 117v	34-8003-1
I1	Pilot lamp, frosted, 117v, 7 watts	34-2605
J1	Jack, male, a-c	27-4785-13
J2	Socket, FM test	27-6180
L1	Coil, FM aerial	32-4415-1
L2	Coil, FM r-f	32-4416-1
L3	Choke, r-f, 3.3 μh.	32-4422-10
L4	Choke, r-f, 3.3 μh.	32-4422-10
L5	Coil, FM oscillator	32-4414-1
L6	Choke, filament, 2.2 μh.	32-4422-8
L7	Choke, filament, 2.2 μh.	32-4422-8
LA1	Loop aerial, AM	32-4052-49
LA2	Line-cord aerial, FM	Part of W1
LS1	Speaker, 4" p-m, including output transformer	32-1614-6
R1	Resistor, cathode bias, 120 ohms	66-1128340*
R2	Resistor, screen decoupling, 470 ohms	66-1478340*
R3	Resistor, grid return, 15,000 ohms	66-3158340*
R4	Resistor, grid return, 1 megohm	66-5108340*
R5	Resistor, parasitic suppressor, 680 ohms	66-1688340*
R6	Resistor, parasitic suppressor, 470 ohms	66-1478340*
R7	Resistor, plate dropping, FM, 1000 ohms	66-2108340*
R8	Resistor, plate dropping, AM, 47,000 ohms	66-3478340*
R9	Resistor, plate dropping, 4700 ohms	66-2478340*
R10	Resistor, cathode bias, 47 ohms	66-0478340*
R11	Resistor, screen decoupling, 1000 ohms	66-2108340*
R12	Resistor, plate decoupling, 2200 ohms	66-2228340*
R13	Resistor, grid return, 1 megohm	66-5108340*
R14	Resistor, cathode bias, 120 ohms	66-1128340*
R15	Resistor, a-v-c filter, 1 megohm	66-5108340*
R16	Resistor, decoupling, 470 ohms	66-1478340*
R17	Resistor, FM diode load, 47,000 ohms	66-3478340*
R18	Resistor, de-emphasis, 47,000 ohms	66-3478340*
R19	Resistor, i-f filter, 47,000 ohms	66-3478340*
R20	Resistor, a-v-c load, 3.3 megohms	66-5338340*
R21	Volume control (with off-on switch), 500,000 ohms	33-5566-20
R22	Resistor, grid return, 10 megohms	66-6108340*
R23	Resistor, plate load, 470,000 ohms	66-4478340*
R24	Resistor, grid return, 470,000 ohms	66-4478340*
R25	Resistor, cathode bias, 150 ohms	66-1158340*
R26	Resistor, filter, 470 ohms, 1 watt	66-1474340*
R27	Resistor, filter, 150 ohms, 2 watts	66-1185340*
R28	Resistor, current limiting, 22 ohms, 2 watt	66-0225360
S1	Switch, off-on	Part of R21
T1	Transformer, AM oscillator	32-4458
T2	Transformer, output	Part of LS1
W1	Line cord	41-3791-2
W2	Cable, FM aerial, 72-ohm twin lead	41-3987
WS	Switch, band, 2-wafer	42-1924
Z1	Transformer, FM, 1st i-f	32-4372A
Z2	Transformer, AM, 1st i-f	32-4258-3A
Z3	Transformer, FM, 2nd i-f	32-4372-2A
Z4	Transformer, FM, 3rd i-f	32-4310-1A
Z5	Transformer, AM, 2nd i-f	32-4240A

MISCELLANEOUS

Cabinet	10796
Back, flange, and socket assembly	76-5738
Fastener, back mtg. (4)	W-2235FA9
Baffle	54-8069
Fastener, baffle mtg. (2)	W-2235-2FA9
Dial Scale	54-5089
Clip, scale mtg. (4)	56-7808FE11
Knob, FM-AM	54-4774-2
Knob, tuning	54-4774
Knob, volume-off-on	54-4774-1
Dial Backplate Assembly	76-5733
Drive cord, 25-foot spool	45-8750*
Pointer	56-5630-23FCP
Shaft, drive	56-7931FA11
Spring, gang drive	56-2617
Spring, pointer drive	56-3167
Rubber mounts, gang (5)	27-4771-1
Rubber mounts, speaker (2)	54-4651-1
Socket, 12BA6, 12AU6 (i-f ampl.), 50C5	27-6203
Socket, 12AU6 (r-f ampl.)	27-6203-1
Socket, 12AT7	27-6203-6
Socket, 19C8	27-6203-5
Spacer, "T", speaker mtg. (2)	1W29155FA3
Washer, speaker mtg. (2)	1W52224FA3

©John F. Rider

Compliments of www.nucow.com

MODELS 51-1730,
51-1730(L)

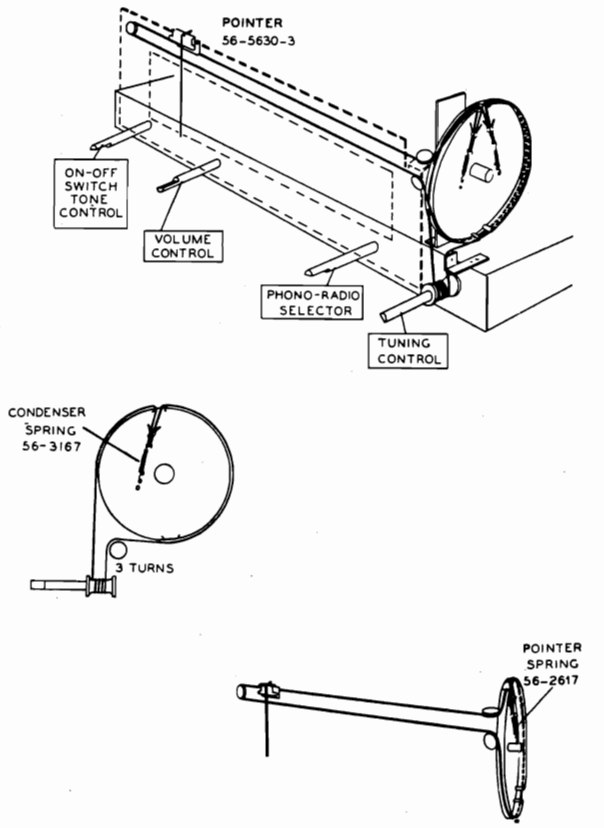

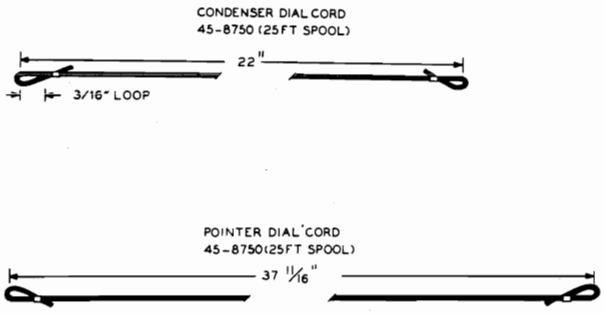

Figure 1. Drive-Cord Installation Details

SPECIFICATIONS

CABINET	Wood console, mahogany or white oak finish
CIRCUIT	8-tube superheterodyne (with t-r-f stage)
FREQUENCY RANGE	540—1620 kc.
AUDIO OUTPUT	3 watts
OPERATING VOLTAGE	105—120 volts, 60 cycles, a.c.
POWER CONSUMPTION	
Radio	50 watts
Phonograph	65 watts, total
INTERMEDIATE FREQUENCY	455 kc.
AERIAL	Built-in low-impedance loop; provision for external aerial
PHILCO TUBES (6)	7B7 r-f ampl., 7B7 i-f ampl., 7A8 converter, 7B6 det.-a.v.c.-1st audio ampl., 6W6GT output, 7X6 rectifier
PHONOGRAPH	Philco Model M-22 All-Speed Automatic Record Changer. (For service information, refer to Service Manual PR-1864.)

ALIGNMENT PROCEDURE

SIGNAL GENERATOR—Connect ground lead to B–. Connect output lead as indicated in chart. Use modulated output.

OUTPUT LEVEL—During alignment, attenuate input signal to maintain an output-meter indication of 1.25 volts.

DIAL POINTER—With tuning gang fully meshed, set pointer to coincide with the first scribe mark from the left on the dial backplate.

RADIO CONTROLS—Set volume control to maximum, tone control fully counterclockwise, and RADIO-PHONO switch to RADIO position.

OUTPUT METER—Connect across voice-coil terminals.

©John F. Rider

Compliments of www.nucow.com

MODELS 51-1730, 51-1730(L)

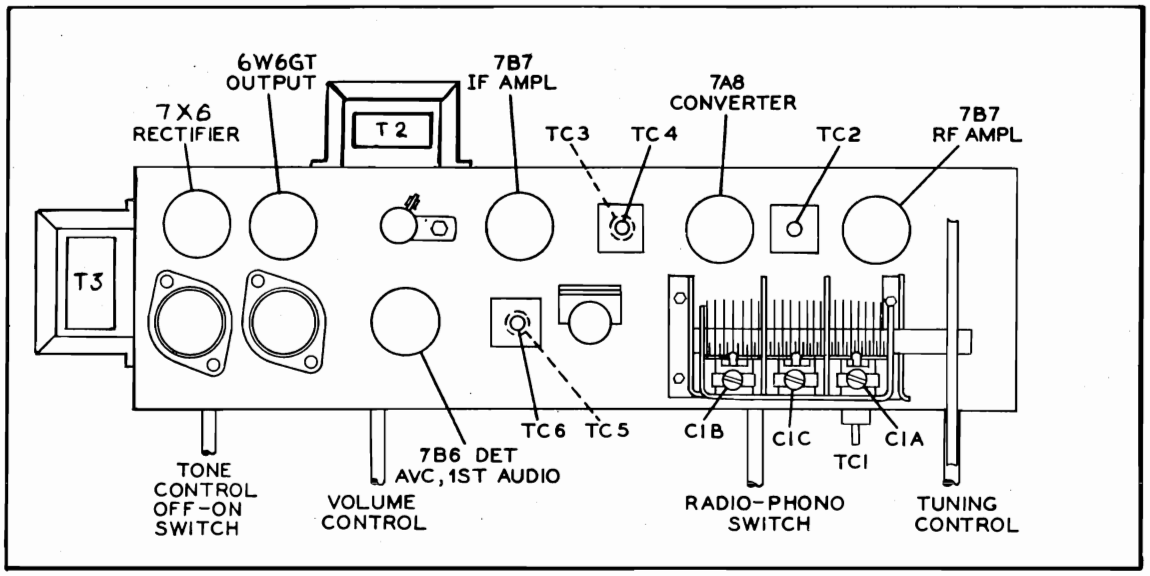

Figure 2. Top View, Showing Trimmer Locations

STEP	SIGNAL GENERATOR		RADIO		ADJUST
	CONNECTION TO RADIO	DIAL SETTING	DIAL SETTING	SPECIAL INSTRUCTIONS	
1	Through a .1-μf. condenser to r-f-ampl. section of C1.	455 kc.	Gang fully meshed.	Adjust, in order given, for maximum output.	TC6—2nd i-f sec. TC5—2nd i f pri. TC4—1st i-f sec. TC3—1st i f pri.
2	Radiating loop (see note below).	1620 kc.	1620 kc.	Adjust for maximum.	C1C—osc. trimmer
3	Same as Step 2.	1500 kc.	1500 kc.	Adjust for maximum.	C1B—r-f trimmer C1A—ant. trimmer
4	Same as Step 2.	580 kc.	580 kc.	Adjust for maximum while rocking tuning control.	TC2—r-f core TC1—ant. core*

RADIATING LOOP: Make up a 6-to-8 turn, 6-inch diameter loop of insulated wire; connect to signal-generator output leads, and place near radio loop.

* The aerial tuning core, TC1, should NOT be adjusted unless the coil has been replaced.

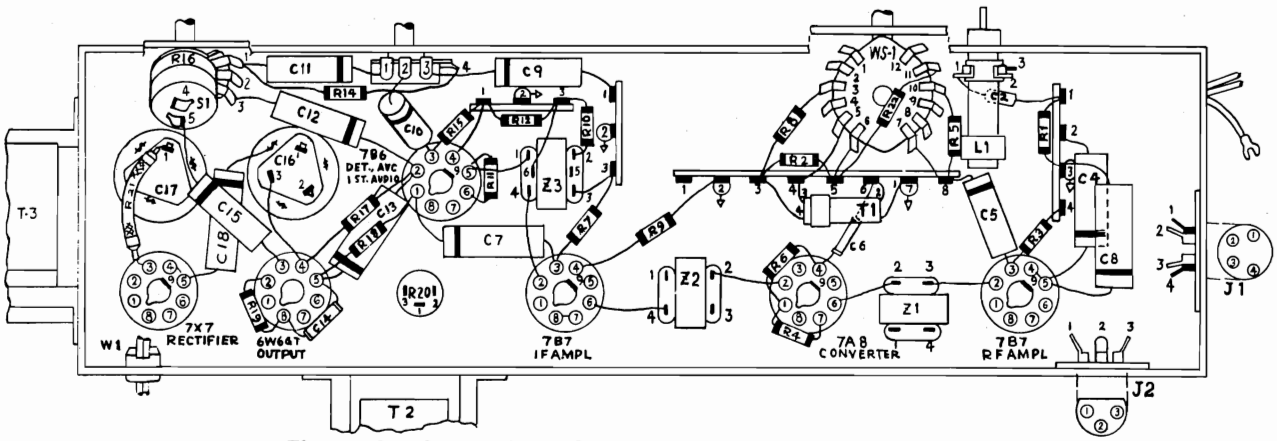

Figure 3. Symbolized Chassis, Showing Parts Placement

©John F. Rider

Compliments of www.nucow.com

MODELS 51-1730,
51-1730(L)

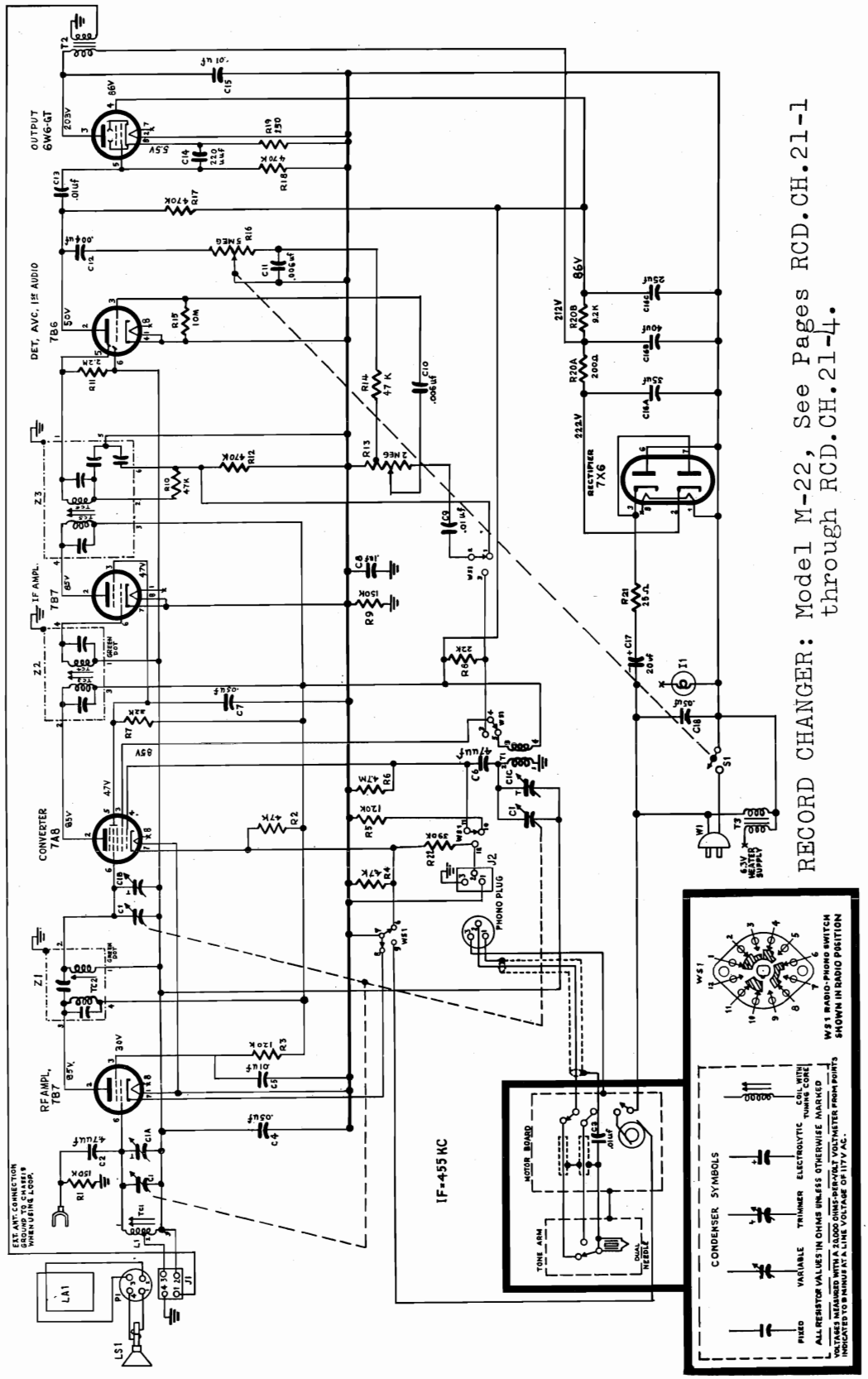

RECORD CHANGER: Model M-22, See Pages RCD.CH.21-1 through RCD.CH.21-4.

Figure 4. Philco Radio-Phonograph Models 51-1730 and 51-1730 (L), Schematic Diagram

Run No. 2 C4 changed in value to .1 $\mu f.$, part no. 61-0113
C9 changed in value to .006 $\mu f.$, part no. 45-3500-7*

©John F. Rider

Compliments of www.nucow.com

MODELS 51-1730, 51-1730(L)

REPLACEMENT PARTS LIST

NOTE: Part numbers marked with an asterisk (*) are general replacement items. These numbers may not be identical with those on factory parts; also, the electrical values of some replacement items may differ from the values indicated in the schematic diagram and parts list. The values substituted in any case are so chosen that the operation of the radio will be either unchanged or improved. When ordering replacements, use only the "Service Part No."

Symbol	Description	Part No.
C1	Condenser, tuning gang, 3-section	31-2748-2
C1A	Condenser, aerial trimmer	Part of C1
C1B	Condenser, r-f trimmer	Part of C1
C1C	Condenser, oscillator trimmer	Part of C1
C2	Condenser, aerial (external) coupling, 4.7 μμf.	30-1221-5*
C3	Condenser, d-c blocking, phono isolation, .01 μf.	61-0120*
C4	Condenser, a-v-c filter, .05 μf.	61-0122*
C5	Condenser, screen by-pass, .01 μf.	61-0120*
C6	Condenser, d-c blocking, 47 μμf.	60-00475417*
C7	Condenser, screen by-pass, .05 μf.	61-0122*
C8	Condenser, by-pass, B– to ground, .1 μf.	61-0113*
C9	Condenser, d-c blocking, .01 μf.	61-0120*
C10	Condenser, d-c blocking, .006 μf.	61-0105*
C11	Condenser, tone compensation, .01 μf.	61-0120*
C12	Condenser, tone compensation, high-cut, .004 μf.	61-0179*
C13	Condenser, d-c blocking, .01 μf.	61-0120*
C14	Condenser, grid by-pass, 220 μμf.	62-122001001*
C15	Condenser, tone compensation, .01 μf.	61-0120*
C16	Condenser, electrolytic, 3-section	30-2568-45
C16A	Condenser, filter, 35 μf., 250v	Part of C16
C16B	Condenser, filter, 40 μf., 250v	Part of C16
C16C	Condenser, filter, 25 μf., 250v	Part of C16
C17	Condenser, electrolytic, voltage doubler, 20 μf., 150v	30-2568-22
C18	Condenser, line by-pass, .05 μf.	61-0122*
I1	Pilot lamp	34-2064
J1	Socket, aerial input and speaker	27-6214-1
J2	Socket, phono input	27-6126*
L1	Coil, aerial	32-4413-1
LA1	Loop aerial	32-4394-8
LS1	Speaker, 8-inch, p-m	36-1626-1
P1	Cable-and-plug assembly, speaker and loop	41-3948-3
R1	Resistor, aerial isolating, 150,000 ohms	66-4158340*
R2	Resistor, voltage divider, 47,000 ohms	66-3478340*
R3	Resistor, screen dropping, 120,000 ohms	66-4128340*
R4	Resistor, voltage divider (phono), 4700 ohms	66-2478340*
R5	Resistor, grid return, 120,000 ohms	66-4128340*
R6	Resistor, grid return (phono), 4.7 megohms	66-5478340*
R7	Resistor, dropping, 22,000 ohms	66-3228340*
R8	Resistor, plate load (phono), 22,000 ohms	66-3228340*
R9	Resistor, leakage, 150,000 ohms	66-4158340*
R10	Resistor, i-f filter, 47,000 ohms	66-3478340*
R11	Resistor, a-v-c diode load, 2.2 megohms	66-5228340*
R12	Resistor, diode load, 470,000 ohms	66-4478340*
R13	Volume control, 2 megohms, tapped at 1 megohm	33-5535-29
R14	Resistor, tone compensation, 47,000 ohms	66-3478340*
R15	Resistor, grid return, 10 megohms	66-6108340*
R16	Tone control (with off-on switch), 5 megohms	33-5566-19
R17	Resistor, plate load, 470,000 ohms	66-4478340*
R18	Resistor, grid return, 470,000 ohms	66-4478340*
R19	Resistor, cathode bias, 150 ohms	66-1154340*
R20	Resistor, 2-section, wire-wound	33-3445-1
R20A	Resistor, filter, 200 ohms, 2 watts	Part of R20
R20B	Resistor, filter, 9200 ohms, 4 watts	Part of R20
R21	Resistor, current limiting, 25 ohms	33-1334-5
R22	Resistor, phono tone compensation, 390,000 ohms	66-4398340*
S1	Switch, off-on	Part of R16
T1	Transformer, oscillator	32-4263
T2	Transformer, output	32-8460-1
T3	Transformer, filament	32-8961
W1	Line cord	L-2183*
WS1	Switch, wafer, radio-phono	42-1926
Z1	Transformer, r-f	32-4399-4A
Z2	Transformer, 1st i-f	32-4160A
Z3	Transformer, 2nd i-f	32-4240A

MISCELLANEOUS

Description	Service Part No.
Cabinet, 51-1730	10821
Cabinet, 51-1730 (L)	10821-1
Dial scale	54-5100
Domes (4)	45-6190
Door pull	56-6493
Door pull, light cabinet	56-6493-1
Door support	76-6275
Frame, changer mounting	76-6264
Knife hinge (2), RH and LH	45-6036
Knife, hinge (2), RH and LH, light cabinet	45-6036-1
Rubber band (2), scale mounting	54-4480
Scale strap (2), ends	56-4860
Scale, strap, middle	56-4756FE11
Screw (6), scale strap mounting	1W25328FE11
Speaker bolts (4)	W-700-2
Tapped stud (2)	56-6296
Washer, fiber (4), speaker mounting	27-7467
Dial backplate assembly	76-5723
Bracket-and-pulley assembly	76-4003
Bumper, rubber (2)	54-4181
Diffusing panel	54-7606-1
Fastener, snap	28-4342FA3
Spring (2)	56-3841
Drive cord, 25-foot spool	48-8750*
Pointer	56-5630-3
Spring, pointer drive	56-2617
Fish paper	27-9111
Knob (1)	54-4718-12
Knob (3)	54-4718-6
Mount, rubber, gang mounting (4)	27-4771-1
Pilot-lamp bracket-and-clip assembly	76-5722
Pilot-lamp-socket assembly	27-6233-2
Rubber band, around electrolytic	54-4480
Shaft-and-pulley assembly, drive	76-3959-3
Bushing	27-9437
Spring, hairpin (2)	57-1468FA1
Spring, hairpin	57-0985
Sleeve, changer mounting (3)	54-7798
Socket, Loktal (5)	27-6207
Socket, octal	27-6174
Speed nut, changer mounting (3)	W-2554FCP
Spring, changer mounting, heavy (3)	56-7059FA9
Spring, changer mounting, light (3)	56-7059-1FJ47
Spring, gang drive	56-3167
Wafer, electrolytic mtg. (2)	27-9508

©John F. Rider

Compliments of www.nucow.com

MODELS 51-1731,
51-1732

SPECIFICATIONS

CABINET ..... Wood console, mahogany finish

CIRCUIT ..... 8-tube superheterodyne

FREQUENCY RANGES
- Standard broadcast ..... 540—1630 kc.
- FM ..... 88—108 mc.

AUDIO OUTPUT
- Model 51-1731 ..... 3.0 watts
- Model 51-1732 ..... 5.0 watts

OPERATING VOLTAGE ..... 117 volts, 60 cycles, a.c.

POWER CONSUMPTION
- Radio ..... 110 watts
- Phonograph ..... 125 watts

AERIALS ..... Built-in broadcast loop; FM line-cord aerial; provision for connection of external aerials.

INTERMEDIATE FREQUENCIES
- AM ..... 455 kc.
- FM ..... 9.1 mc.

PHILCO TUBES (7) ..... 6AU6 r-f ampl., 7F8/S osc.-mixer-phono preamp., 6BA6 1st i-f ampl., 6AU6 2nd i-f ampl., 6V8 det.-a.v.c.-1st audio, 6W6GT (51-1731) or 6Y6GT (51-1732) output, 5AZ4 rectifier.

RECORD PLAYER ..... Philco Model M-22 All-Speed Automatic Record Changer (for service information, refer to Service Manual PR-1864).

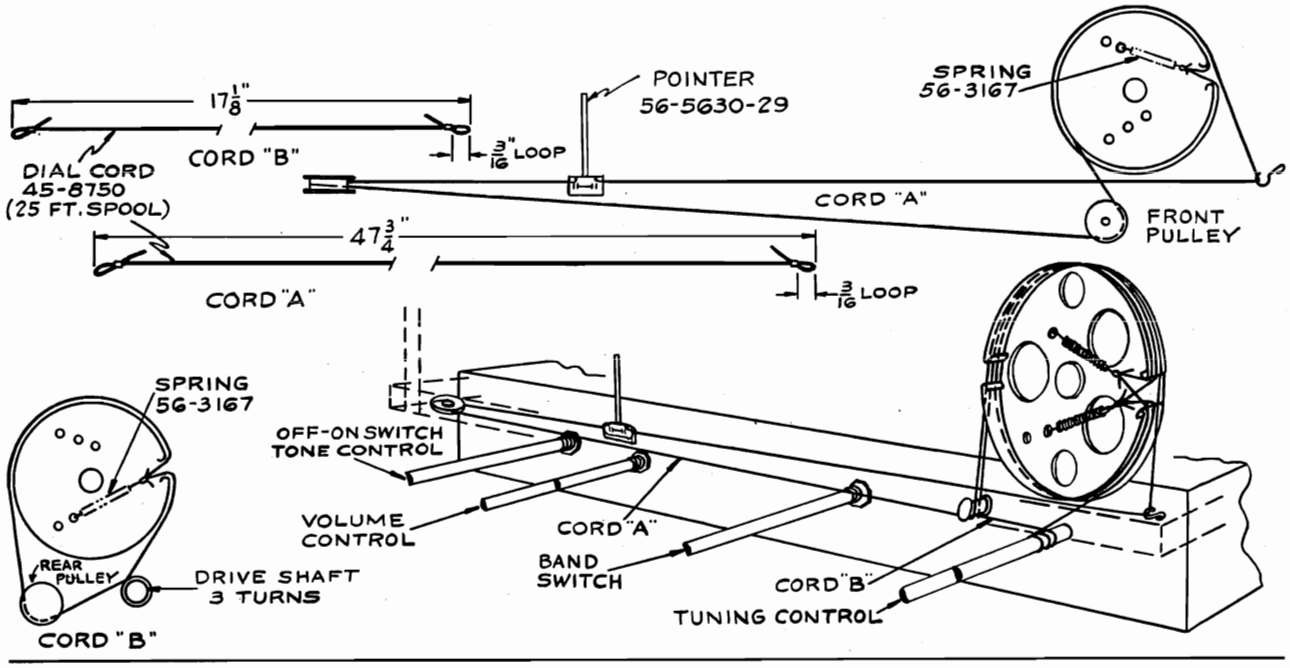

Figure 1. Drive-Cord Installation Details

AM ALIGNMENT PROCEDURE

Make alignment with loop aerial connected to radio. The AM alignment should be made before the FM alignment.

DIAL POINTER: Calibration and pointer-index measurements are shown in figure 3. With tuning gang fully meshed, set pointer to index mark.

OUTPUT METER: Connect across speaker voice-coil terminals.

SIGNAL GENERATOR: Connect AM r-f signal generator as indicated in chart. Generator ground lead to chassis. Use modulated output.

RADIO CONTROLS: Set volume control to maximum, tone control counterclockwise, and band switch to broadcast position.

OUTPUT LEVEL: During alignment, adjust signal-generator output to hold output meter indication below 1.25 volts.

©John F. Rider

Compliments of www.nucow.com

MODELS 51-1731, 51-1732

AM ALIGNMENT CHART

STEP	SIGNAL GENERATOR		RADIO		ADJUST TRIMMER
	CONNECTION TO RADIO	DIAL SETTING	DIAL SETTING	SPECIAL INSTRUCTIONS	
1	Through a .01-μf. condenser to mixer grid, pin 1, of 7F8/S.	455 kc.	Gang fully meshed.	Adjust, in order given, for maximum output.	TC11—2nd AM i-f sec. TC10 2nd AM i-f pri. TC5—1st AM i-f sec. TC4—1st AM i-f pri.
2	Radiating loop. (See Note below.)	1600 kc.	1600 kc.	Adjust for maximum output.	C1D—AM osc. shunt
3	Same as step 2.	1500 kc.	1500 kc.	Adjust for maximum output.	C1B—AM ant. shunt
4	Same as step 2.	580 kc.	580 kc.	Adjust for maximum output. This should not be necessary unless T1 (aerial transformer) has been replaced.	TC1—AM ant. tuning core

RADIATING LOOP: Make up a 6-to-8 turn, 6-inch-diameter loop, using insulated wire; connect to signal generator leads and place near radio loop aerial.

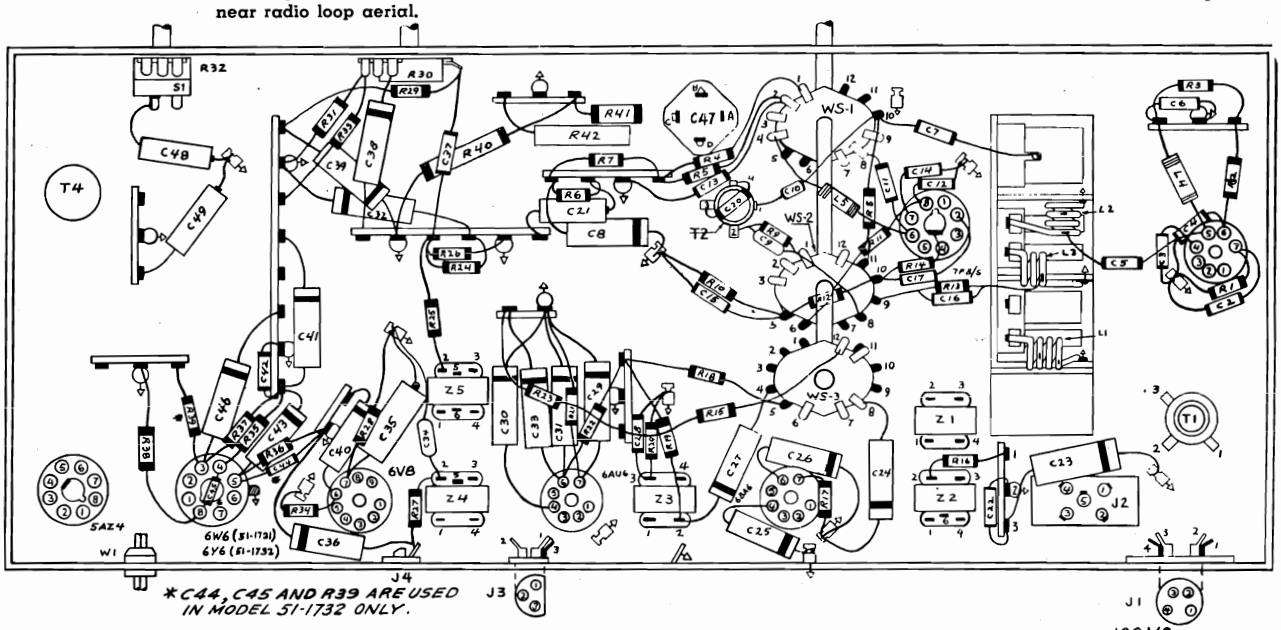

Figure 2. Symbolized Chassis, Showing Parts Placement

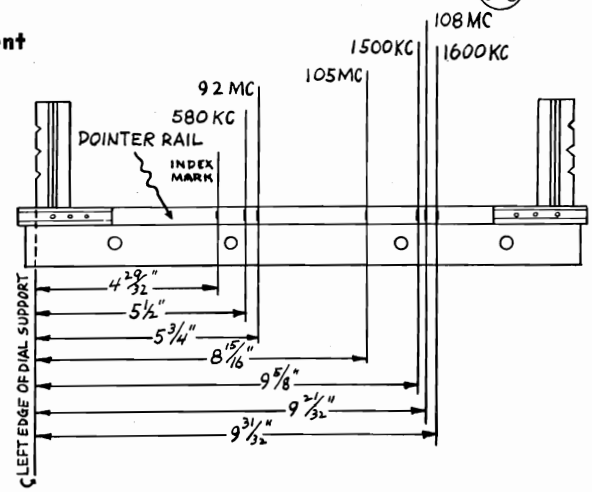

Figure 3. Dial-Backplate Calibration Measurements

©John F. Rider

Compliments of www.nucow.com

MODELS 51-1731,
51-1732

FM ALIGNMENT PROCEDURE

Make the AM alignment first.

RADIO CONTROLS: Set volume control to maximum, tone control counterclockwise, and band switch to FM position. Allow radio and signal generator to warm up for at least 15 minutes before making alignment.

SIGNAL GENERATOR: Use a signal generator capable of delivering a 9.1-mc. FM signal with a deviation of ±80 kc., and modulated AM signals of 92 mc., 105 mc., and 108 mc. Philco Model 7008 Precision Visual Alignment Generator fulfills these requirements. NOTE: The signal generator must be well bonded to radio chassis.

OSCILLOSCOPE: Connect to FM Test jack. Model 7008 is suggested.

OUTPUT METER: Connect across speaker voice-coil terminals.

R-F COIL NOTE: Check resonance of circuits containing coils L1, L2, and L3 by inserting each end of a tuning wand, such as Philco Part No. 45-8885, into coil. If signal strength increases when powdered-iron end is inserted, compress turns slightly. If signal strength increases when brass end is inserted, spread turns slightly. If signal strength decreases when each end is inserted, no adjustment is necessary. Do no spread or compress turns excessively; only a small change is required at these high frequencies.

FM ALIGNMENT CHART

STEP	SIGNAL GENERATOR		RADIO		ADJUST TRIMMER
	CONNECTION TO RADIO	DIAL SETTING	DIAL SETTING	SPECIAL INSTRUCTIONS	
1	Through a .01-μf. condenser to pin 1 of 6AU6 I-F amplifier.*	9.1 mc. ± 80 kc. deviation.	Gang fully meshed.	Adjust TC9 for correct crossover. Adjust TC8 for maximum and equal peaks. Repeat.	TC9—FM det. sec. TC8—FM det. pri.
2	.01-μf. condenser to pin 1 of 6BA6.*	9.1 mc. ± 80 kc. deviation.	Gang fully meshed.	Adjust, in order given, for maximum and equal peaks. Repeat.	TC7—FM 2nd i-f sec. TC6—FM 2nd i-f pri.
3	.01-μf. condenser to pin 1 of 7F8/S.*	9.1 mc. ± 80 kc. deviation.	Gang fully meshed.	Adjust, in order given, for maximum and equal peaks. Repeat.	TC3—FM 1st i-f sec. TC2—FM 1st i-f pri.
4	Through a 300 ohm dummy aerial to FM aerial socket, J1.	108 mc.	108 mc.	Adjust trimmer for maximum reading on output meter.	C18—FM osc.
5	Same as step 4.	105 mc.	105 mc.	Adjust for maximum output while rocking gang.	C1C—FM r-f C1A—FM aerial
6	Same as step 4.	92 mc.	92 mc.	Adjust coils, in order given, for proper resonance (see R-F COIL NOTE).	L3—FM osc. coil L2—FM r-f coil L1—FM aerial coil

*CAUTION: Do not overload! When aligning the i-f stages, the curve will be distorted or destroyed if too great a signal is used. To check, attenuate the signal input. If the curve changes in form, rather than merely decreasing in amplitude, the stage is overloaded.

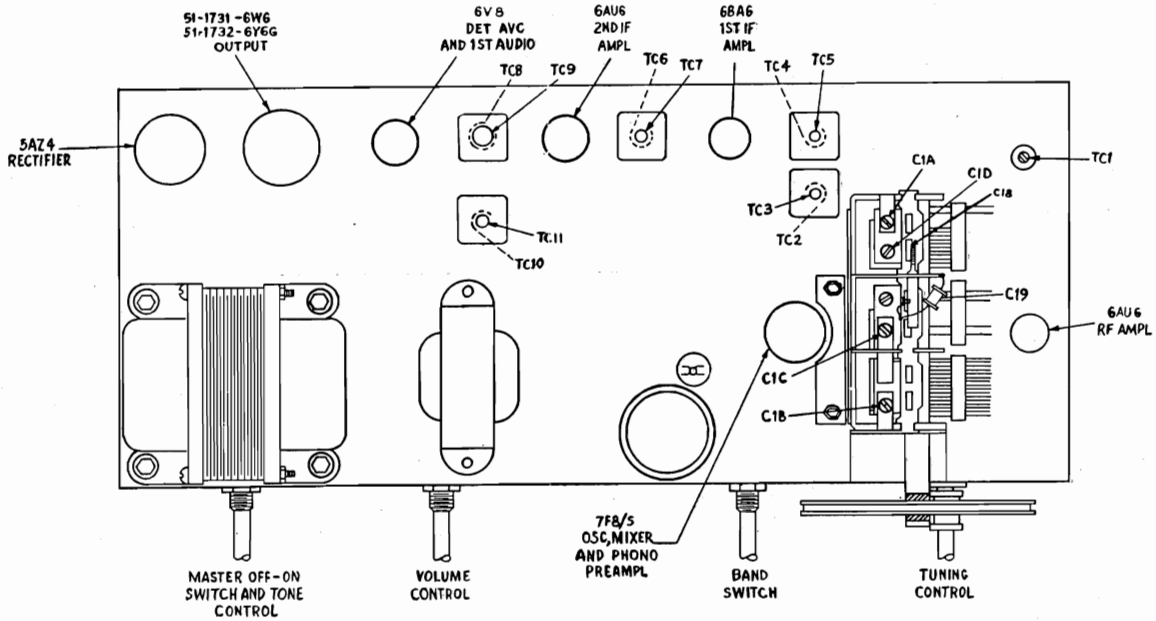

Figure 5. Top View, Showing Trimmer Locations

©John F. Rider

Compliments of www.nucow.com

MODELS 51-1731, 51-1732

REPLACEMENT PARTS LIST

NOTE: Part numbers identified by an asterisk (*) are general replacement items. These numbers may not be identical with those on factory parts; also, the electrical values of some replacement items may differ from the values indicated in the schematic diagram and parts list. The values substituted in any case are so chosen that the operation of the radio will be either unchanged or improved. When ordering replacements, use only the "Service Part No."

Reference Symbol	Description	Service Part No.
C1	Condenser, tuning gang, five section	31-2756-2
C2	Condenser, cathode by-pass, 100 μμf.	62-110001001
C3	Condenser, filament by-pass, 100 μμf.	62-110001001
C4	Condenser, screen by-pass, 1500 μμf.	62-215001001
C5	Condenser, d-c blocking, 220 μμf.	62-122001001
C6	Condenser, plate decoupling, 100 μμf.	62-110001001
C7	Condenser, d-c blocking, 220 μμf.	62-122001001
C8	Condenser, plate decoupling (Phono), .05 μf.	61-0122*
C9	Condenser, d-c blocking, .01 μf. mica	30-1226-10
C10	Condenser, neutralization, 3.3 μμf.	30-1224-59
C11	Condenser, d-c blocking, 220 μμf.	62-122001001
C12	Condenser, grid by-pass, 100 μμf.	62-110001001
C13	Condenser, plate decoupling (FM), 100 μμf.	62-110001001
C14	Condenser, filament by-pass, 100 μμf.	62-110001001
C15	Condenser, grid by-pass (Phono), 1500 μμf.	62-215001001
C16	Condenser, d-c blocking, 47 μμf.	62-051009001*
C17	Condenser, cathode by-pass, 100 μμf.	62-110001001
C18	Condenser, trimmer (FM)	31-6511-10
C19	Condenser, temperature compensating, 4.7 μμf.	30-1224-29
C20	Condenser, temperature compensating, 7.5 μμf.	30-1224-65
C21	Condenser, d-c blocking, phono coupling, .001 μf.	45-3505-55*
C22	Condenser, plate decoupling, 100 μμf.	62-110001001
C23	Condenser, plate decoupling, .01 μf.	61-0120*
C24	Condenser, a-v-c by-pass, .01 μf.	61-0120*
C25	Condenser, filament by-pass, .01 μf.	61-0120*
C26	Condenser, screen by-pass, .002 μf.	61-0062*
C27	Condenser, plate decoupling, .006 μf.	45-3500-7*
C28	Condenser, by-pass, 100 μμf.	62-110001001
C29	Condenser, cathode by-pass, .01 μf.	61-0120*
C30	Condenser, filament by-pass, .01 μf.	61-0120*
C31	Condenser, screen by-pass, .002 μf.	61-0062*
C33	Condenser, plate decoupling, .01 μf.	61-0120*
C34	Condenser, i-f filter, 150 μμf.	60-10155407
C35	Condenser, electrolytic, diode load filter, 2 μf., 50v	30-2417-7
C36	Condenser, de-emphasis, .002 μf.	61-0062*
C37	Condenser, tone compensation, 100 μμf.	62-110001001
C38	Condenser, d-c blocking, .02 μf.	61-0108*
C39	Condenser, tone compensation,	
	Model 51-1731—.02 μf.	61-0108*
	Model 51-1732—.03 μf.	30-4517
C40	Condenser, d-c blocking, .006 μf.	45-3500-7*
C41	Condenser, tone control, hi-cut, .006 μf.	45-3500-7*
C42	Condenser, plate by-pass, 100 μμf.	62-110001001
C43	Condenser, d-c blocking, .006 μf.	45-3500-7*
C44	Condenser, grid by-pass, parasitic suppression, 51 μμf., Model 51-1732 only	62-051009001
C45	Condenser, screen by-pass, parasitic suppression, 51 μμf., Model 51-1732 only	62-051009001
C46	Condenser, tone compensation, .006 μf.	45-3500-7*
C47	Condenser, electrolytic, 4 section,	
	Model 51-1731	30-2570-63
	Model 51-1732	30-2570-64
C47A	Condenser, cathode by-pass, 10 μf., 25wv	Part of C47
C47B	Condenser, filter, 40 μf.,	
	Model 51-1731—300wv	Part of C47
	Model 51-1732—350wv	Part of C47
C47C	Condenser, filter, 60 μf.,	
	Model 51-1731—350wv	Part of C47
	Model 51-1732—400wv	Part of C47
C47D	Condenser, filter, 40 μf.,	
	Model 51-1731—350wv	Part of C47
	Model 51-1732—400wv	Part of C47
C48	Condenser, line filter, .01 μf.	45-3505-41*
C49	Condenser, line filter, .01 μf.	45-3505-41*
I1	Pilot lamp	34-2065
J1	Socket, FM antenna	27-6214-1
J2	Socket, AM antenna	27-6252-9
J3	Socket, phono input	27-6126
J4	Jack, FM test	27-6180
L1	Coil, FM aerial	32-4489
L2	Coil, FM r-f	32-4490
L3	Coil, FM oscillator	32-4488
L4	Choke, plate load	32-4422-10
L5	Choke, plate load	32-4422-10
LA1	Loop aerial, Model 51-1731	32-4394-10
	Model 51-1732	32-4394-11
LA2	Aerial, FM line cord	41-3791-1
LS1	Speaker, Model 51-1731	36-1626-5
	Model 51-1732	36-1610-6
R1	Resistor, cathode bias, 120 ohms	66-1128340*
R2	Resistor, screen dropping, 27,000 ohms	66-3278340*
R3	Resistor, plate decoupling, 1000 ohms	66-2108340*
R4	Resistor, plate dropping (AM),	
	Model 51-1731—22,000 ohms	66-3228340*
	Model 51-1732—47,000 ohms	66-3478340*
R5	Resistor, plate dropping (FM),	
	Model 51-1731—1000 ohms	66-2108340*
	Model 51-1732—10,000 ohms	66-3108340*
R6	Resistor, plate load (Phono), 27,000 ohms	66-3278340*
R7	Resistor, plate decoupling (Phono), 33,000 ohms	66-3338340*
R8	Resistor, grid return, 1 megohm	66-5108340*
R9	Resistor, parasitic suppressor,	
	Model 51-1731—680 ohms	66-1688340*
	Model 51-1732—1000 ohms	66-2108340*
R10	Resistor, grid return, 1 megohm	66-5108340*
R11	Resistor, grid return, 15,000 ohms	66-3158340*
R12	Resistor, grid return, 330,000 ohms	66-4338340*
R13	Resistor, parasitic suppressor,	
	Model 51-1731—330 ohms	66-1338340*
	Model 51-1732—470 ohms	66-1478340*

©John F. Rider

Compliments of www.nucow.com

MODELS 51-1731,
51-1732

REPLACEMENT PARTS LIST (Cont.)

Reference Symbol	Description	Service Part No.
R14	Resistor, cathode bias (phono), 6800 ohms	66-2688340*
R15	Resistor, plate dropping,	
	Model 51-1731—22,000 ohms	66-3228340*
	Model 51-1732—33,000 ohms	66-3338340*
R16	Resistor, grid return, 1 megohm	66-5108340*
R17	Resistor, cathode bias, 47 ohms	66-0478340*
R18	Resistor, screen dropping,	
	Model 51-1731—22,000 ohms	66-3228340*
	Model 51-1732—10,000 ohms	66-3108340*
R19	Resistor, plate decoupling, 2200 ohms	66-2228340*
R20	Resistor, grid return, 1 megohm	66-5108340*
R21	Resistor, cathode bias, 120 ohms	66-1128340*
R22	Resistor, screen dropping, 15,000 ohms	66-3158340*
R23	Resistor, plate decoupling, 1000 ohms	66-2108340*
R24	Resistor, a-v-c filter, 3.3 megohms	66-5338340*
R25	Resistor, i-f filter, 47,000 ohms	66-3478340*
R26	Resistor, a-v-c voltage divider, 470,000 ohms	66-4478340*
R27	Resistor, de-emphasis, 47,000 ohms	66-3478340*
R28	Resistor, diode load (FM), 47,000 ohms	66-3478340*
R29	Resistor, base boost,	
	Model 51-1731—27,000 ohms	66-3278340*
	Model 51-1732—18,000 ohms	66-3188340*
R30	Volume control	33-5535-27
R31	Resistor, feed-back voltage divider, 4.7 ohms	66-9478340*
R32	Tone control, 4 megohms	33-5566-12
R33	Resistor, inverse feedback, 120 ohms	66-1128340*
R34	Resistor, grid return, 10 megohms	66-6108340*
R35	Resistor, plate load, 470,000 ohms	66-4478340*
R36	Resistor, grid return, 470,000 ohms	66-4478340*
R37	Resistor, inverse feedback, 2.7 megohms	66-5278340*
R38	Resistor, cathode bias,	
	Model 51-1731—120 ohms, 1w	66-1124340*
	Model 51-1732—180 ohms, 1w	66-1184340*
R39	Resistor, parasitic suppressor, 10 ohms, Model 51-1732 only	66-0108340*
R40	Resistor, bleeder,	
	Model 51-1731—22,000 ohms	66-3225340*
	Model 51-1732—120,000 ohms	66-4125340*
R41	Resistor, filter,	
	Model 51-1731—3300 ohms, 2w	66-2335340*
	Model 51-1732—2500 ohms, 2w	33-1335-93
R42	Resistor, filter, 330 ohms, 7w	33-1335-90
S1	Switch, off-on	Part of R32
T1	Transformer, aerial, AM	32-4413-1
T2	Transformer, oscillator, AM,	
	Model 51-1731	32-4458-2
	Model 51-1732	32-4458-3
T3	Transformer, output, Model 51-1731	32-8460-1
	Model 51-1732	32-8407
T4	Transformer, power, Model 51-1731	32-8459
	Model 51-1732	32-8462
W1	Line cord	L-2183*
WS	Wafer switch	42-1942
Z1	Transformer, 1st FM	32-4372A
Z2	Transformer, 1st AM	32-4258-3A
Z3	Transformer, 2nd FM	32-4372-2A
Z4	Transformer, 3rd FM	32-4310-3A
Z5	Transformer, 2nd AM	32-4240-3A

MISCELLANEOUS

Description	Service Part No.
Cabinet, Model 51-1731	10822
Dial scale	54-5101
Domes (4)	45-6190
Door pull	76-6241
Knife hinge (2)	45-6036
Lid support	76-6275
Spring	56-8510
Tapped stud (2)	56-6296
Cabinet, Model 51-1732	10824
Bullet catch (2)	45-6002
Dial scale	54-5102
Domes (4)	3363-2
Doors, matched set of 2	45-6621
Door pull (2)	56-7062
Knife hinge, left hand (2)	56-8479
Knife hinge, right hand (2)	56-8479-1
Strike plate (2)	45-6003
Cable and plug assembly, speaker and loop	41-3948-4
Changer mounting parts	
Bumper (2)	55-0890
Clip, bottom mounting (4)	W2235-1FA9
Drive screws (8)	1W19432FA1
Frame	76-6257
Knob, pull	56-8496FCP
Screw, knob mounting	1W10078FA3
Rail assembly, LH	76-6258
Rail assembly, RH	76-6259
Sleeve, rubber (3)	54-7798
Speed nut (3)	W-2554FCP
Spring, changer mounting (3), top (heavy)	56-7059FA9
Spring, changer mounting (3), bottom (light)	56-7059-1FCP
Clip, pilot lamp socket mounting	56-3545FA3
Diffusing panel	54-8171-1
Spring, diffusing panel mounting	56-3587-1
Drive cord, 25 foot spool	45-8750
Frame assembly, changer mounting	76-6264
Knob (3)	54-4718-6
Knob, with brown dot	54-4718-12
Pointer	56-5630-29
Spring, gang and pointer drive (2)	56-3167
Pointer rail assembly, backplate	76-6195
Rubber band, scale mounting (2)	54-4480
Rubber mounts, gang (5)	27-4771-1
Scale strap	56-4756FE11
Scale straps (2)	56-2234-2
Socket, Loktal, 5AZ4	27-6207
Socket, Loktal, 7F8	27-6207-1
Socket, 7-pin miniature (3)	27-6265-1
Socket, 9-pin miniature	27-6203-5
Socket, octal	27-6174
Socket, pilot lamp	27-6233-16
Speaker bolts (4)	W700-2
Tuning shaft	56-8429
Bushing	27-9437
Spring, hairpin	57-1468FA3
Washer, fibre, speaker mounting (4)	27-7467

©John F. Rider

Compliments of www.nucow.com

MODELS 51-1731, 51-1732

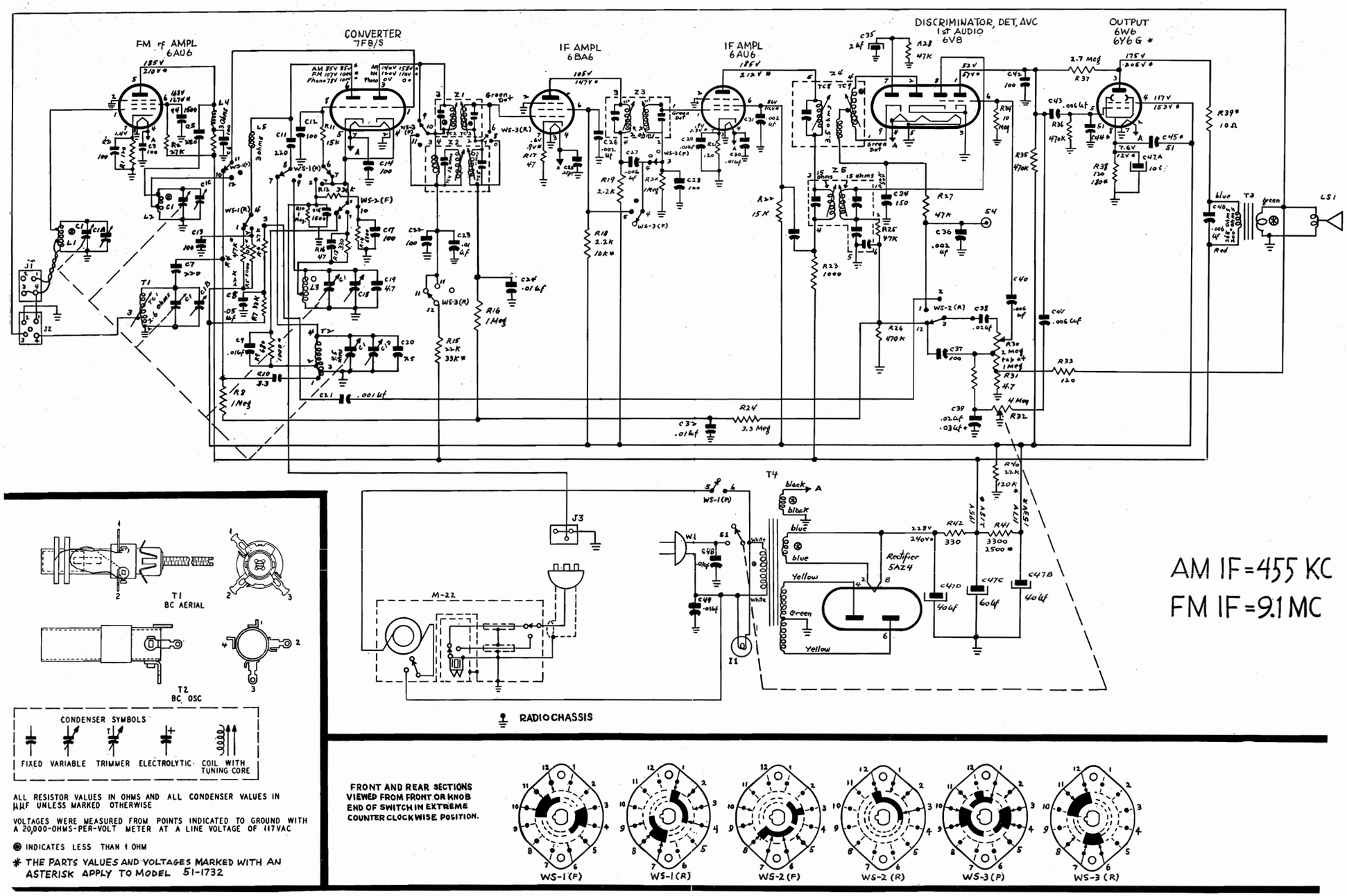

Figure 4. Philco Radio-Phonograph Models 51-1731 and 51-1732, Schematic Diagram

RECORD CHANGER: Model M-22, on Pages RCD.CH.21-1 through RCD.CH.21-4.

©John F. Rider

Compliments of www.nucow.com

MODELS 51-1733,
51-1733(L), 51-1734

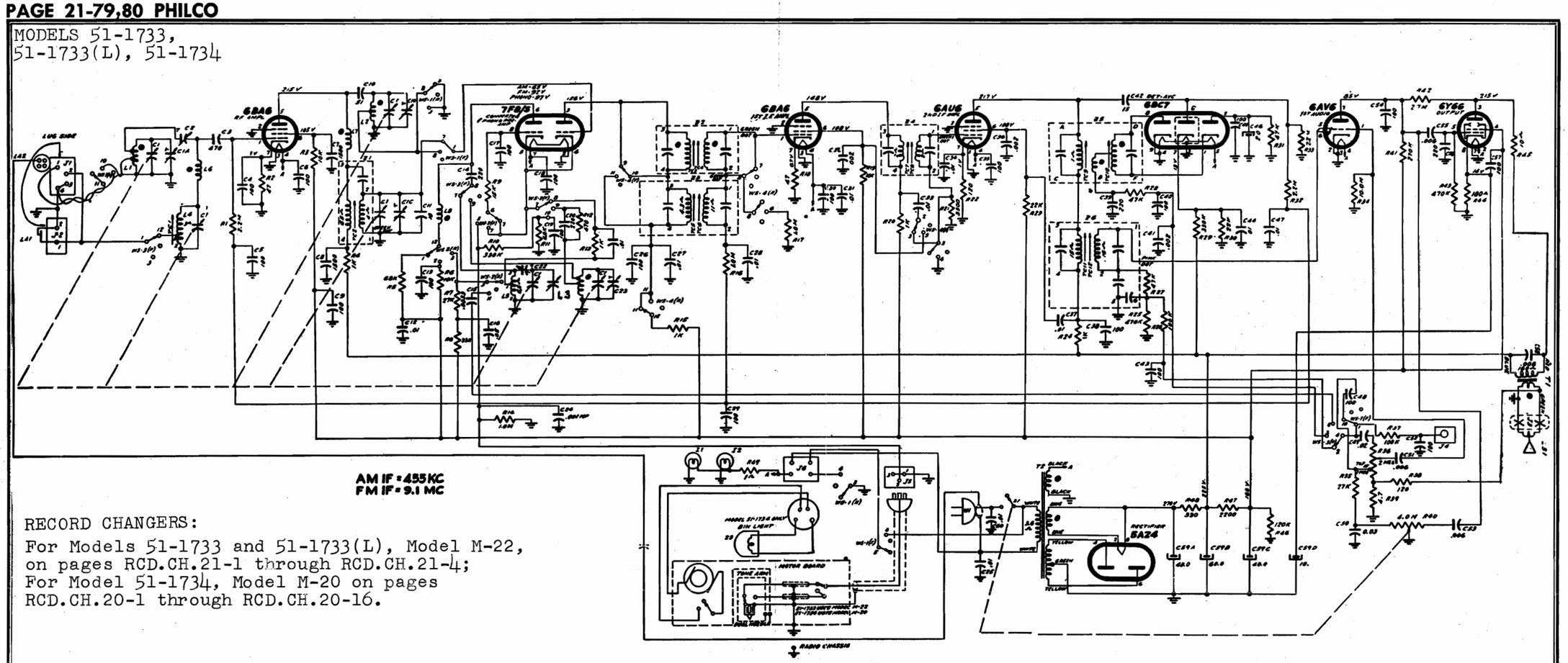

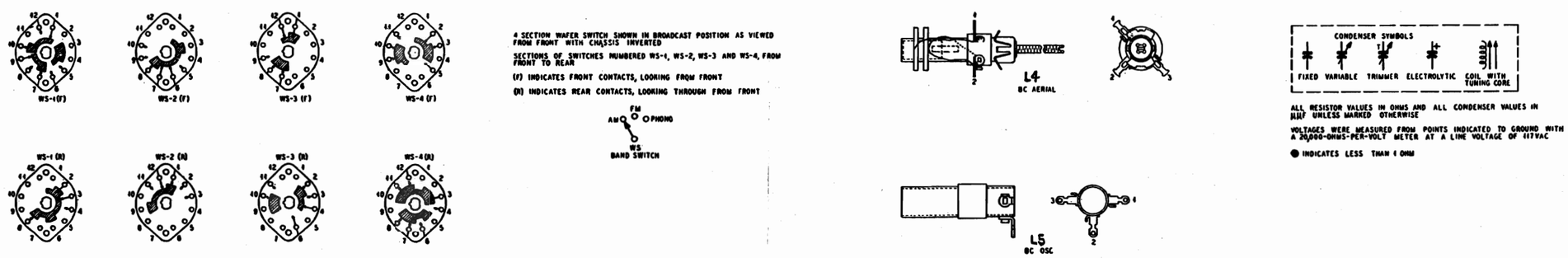

Figure 4. Philco Radio-Phonograph Models 51-1733, 51-1733(L), and 51-1734, Schematic Diagram

©John F. Rider

Compliments of www.nucow.com

MODELS 51-1733,
51-1733(L), 51-1734

SPECIFICATIONS

CABINET
- Model 51-1733 ..... Wood console, mahogany finish
- Model 51-1733 (L) ..... Wood console, light oak finish
- Model 51-1734 ..... Mahogany finish

CIRCUIT ..... 8-tube superheterodyne

FREQUENCY RANGES
- Standard broadcast ..... 540—1630 kc.
- FM ..... 88—108 mc.

AUDIO OUTPUT ..... 5 watts

OPERATING VOLTAGE ..... 117 volts, 60 cycles, a.c.

POWER CONSUMPTION
- Radio ..... 95 watts
- Phonograph ..... 110 watts

AERIALS ..... Built-in broadcast loop; FM line-cord aerial; provision for connection of external aerials

INTERMEDIATE FREQUENCIES
- AM ..... 455 kc.
- FM ..... 9.1 mc.

PHILCO TUBES (8) ..... 6BA6 r-f ampl., 7F8/S osc.-mixer-phono preampl., 6BA6 1st i-f ampl., 6AU6 2nd i-f ampl., 6BC7 FM det.-a.v.c., 6AV6 AM det.-1st audio, 6Y6G output, 5AZ4 rectifier

RECORD PLAYER ..... Models 51-1733 and 51-1733(L). Philco Model M-22 All-Speed Automatic Record Changer (For service information, refer to Service Manual PR-1864).

Model 51-1734. Philco Model M-20 All-Speed Automatic Record Changer (for service information, refer to Service Manual PR-1731).

Figure 1. Drive-Cord Installation Details

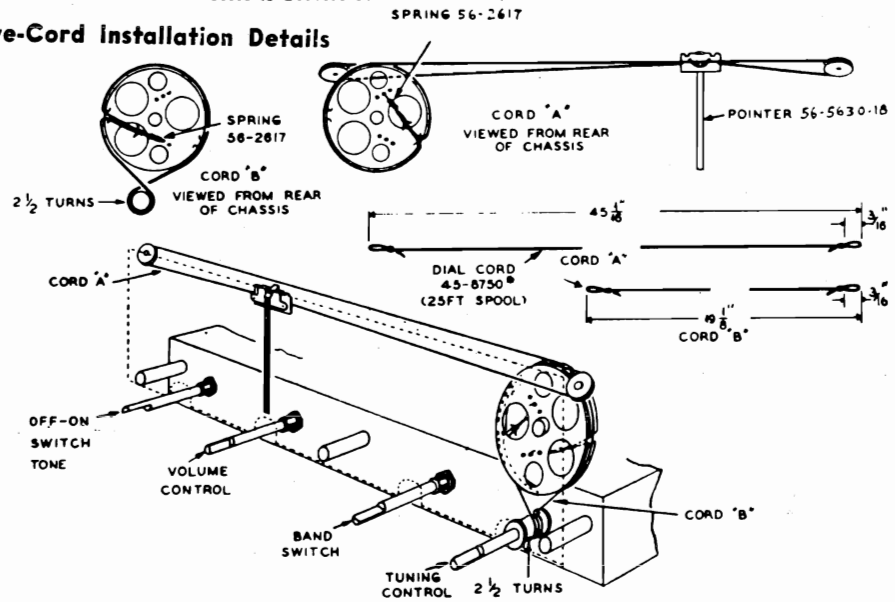

Figure 2. Symbolized Chassis, Showing Parts Placement

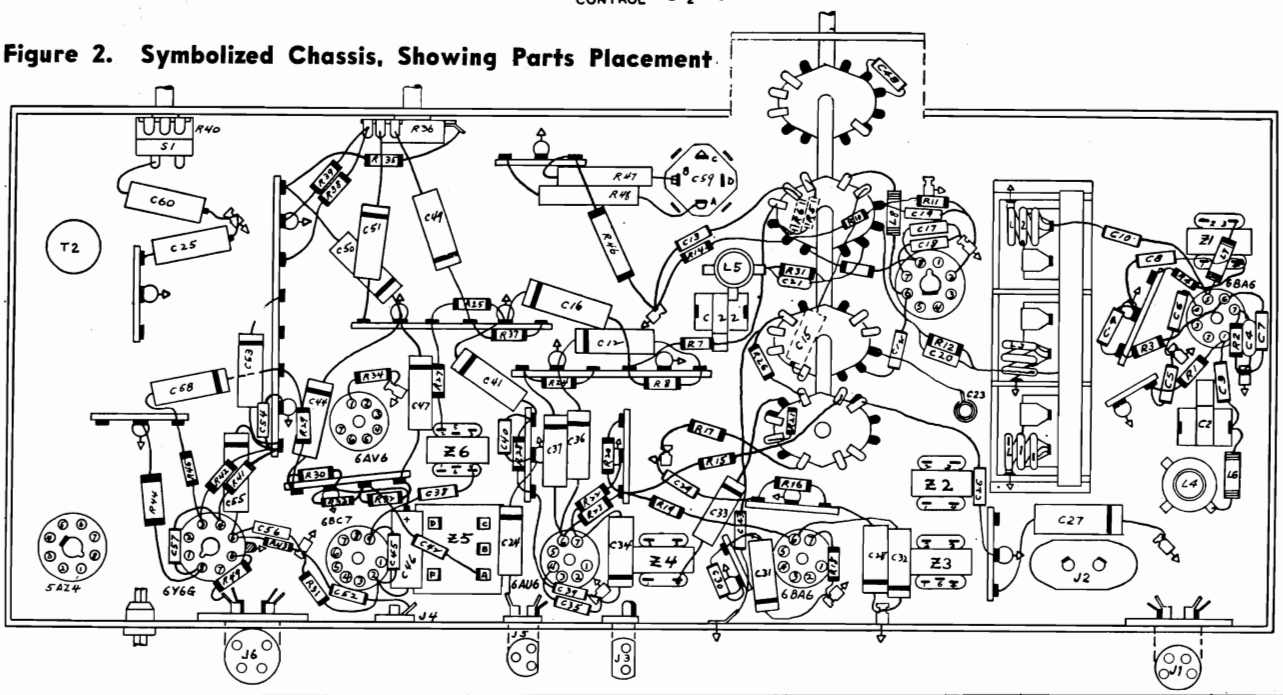

©John F. Rider

Compliments of www.nucow.com

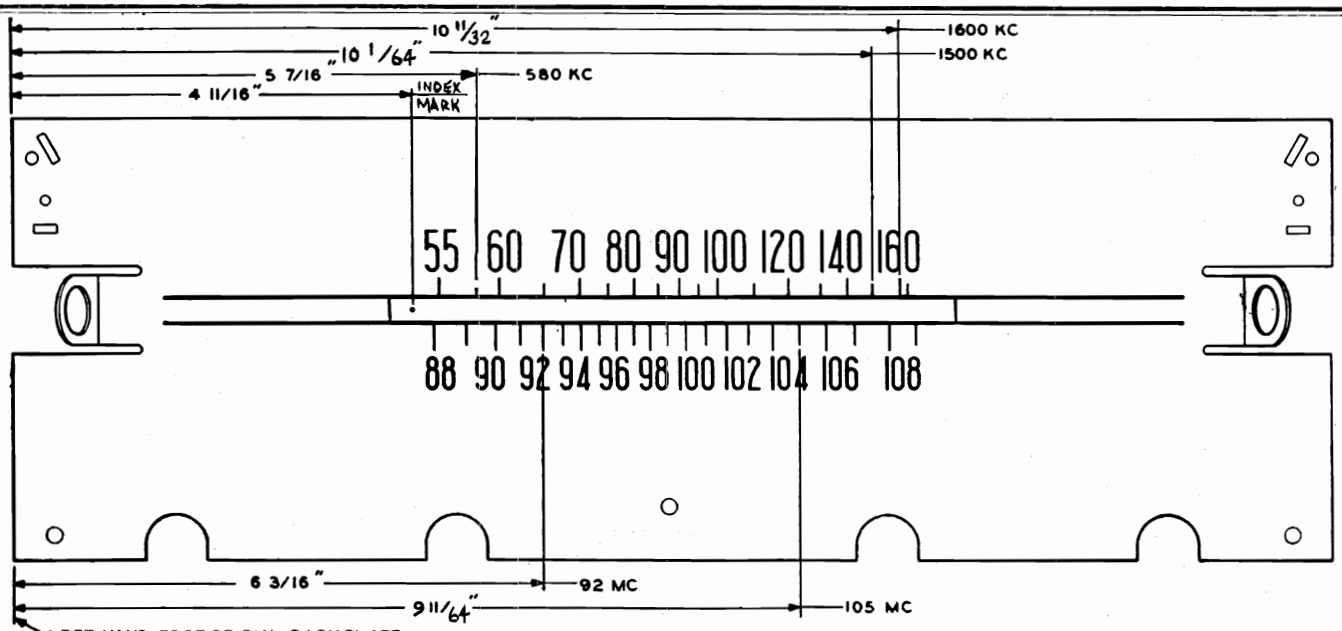

Figure 3. Dial-Backplate Calibration Measurements

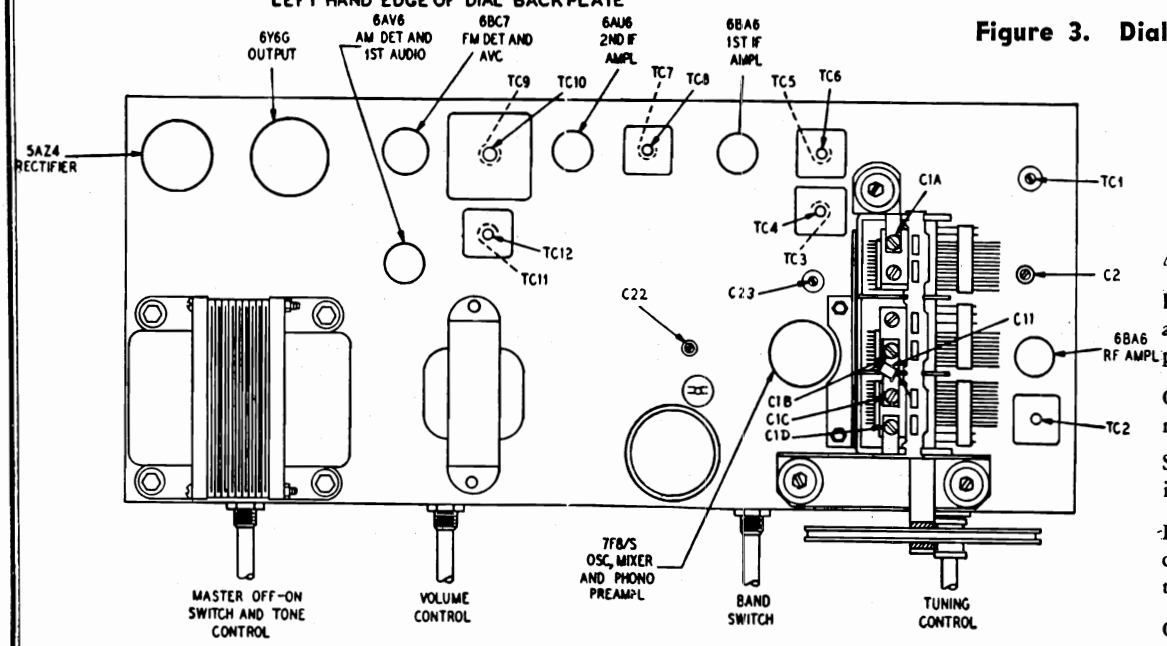

Figure 5. Top View, Showing Trimmer Locations

AM ALIGNMENT PROCEDURE

Make alignment with loop aerial connected to radio. The AM alignment should be made before the FM alignment.

DIAL POINTER: Calibration and pointer-index measurements are shown in figure 5. With tuning gang fully meshed, set pointer to index mark.

OUTPUT METER: Connect across speaker voice-coil terminals.

SIGNAL GENERATOR: Connect AM r-f signal generator as indicated in chart. Use modulated output.

RADIO CONTROLS: Set volume control to maximum, tone control counterclockwise, and band switch to broadcast position.

OUTPUT LEVEL: During alignment, adjust signal-generator output to hold output-meter indicator below 1.25 volts.

©John F. Rider
Compliments of www.nucow.com

MODELS 51-1733, 51-1733(L), 51-1734

AM ALIGNMENT CHART

STEP	SIGNAL GENERATOR		RADIO		ADJUST
	CONNECTION TO RADIO	DIAL SETTING	DIAL SETTING	SPECIAL INSTRUCTIONS	
1	Through a .1-μf. condenser to mixer grid, pin 1, of 7F8/S.	455 kc.	Gang fully meshed	Adjust, in order given, for maximum output.	TC12—2nd AM i-f sec. TC11—2nd AM i-f pri. TC6—1st AM i-f sec. TC5—1st AM i-f pri.
2	Radiating loop. (See note below.)	1600 kc.	1600 kc.	Adjust for maximum.	C1B—AM osc. shunt
3	Same as step 2.	580 kc.	580 kc	Adjust, in order given, for maximum while rocking tuning control.	C22—AM osc. series TC2—AM r-f tuning core TC1—AM ant. tuning core
4	Same as step 2.	1500 kc.	1500 kc.	Adjust, in order given, for maximum.	C1C—AM r-f shunt C2—AM ant. shunt
5	Repeat steps 2, 3, and 4 until no further increase is obtained.				

Radiating Loop: Make up a 6-to-8 turn, 6-inch-diameter loop, using insulated wire; connect to signal generator leads, and place near radio loop aerial.

FM ALIGNMENT PROCEDURE

Make the AM alignment first.

RADIO CONTROLS: Set volume control to maximum, tone control counterclockwise, and band switch to FM position. Allow radio and signal generator to warm up for at least 15 minutes before making alignment.

SIGNAL GENERATOR: Use a signal generator capable of delivering a 9.1-mc. FM signal with a deviation of ±80 kc., and modulated AM signals of 92 mc., 105 mc., and 108 mc. Philco Model 7008 Precision Visual Alignment Generator fulfills these requirements. NOTE: Model 7008 must be well bonded to radio chassis.

OSCILLOSCOPE: Connect to FM TEST jack. Model 7008 is suggested.

OUTPUT METER: Connect across speaker voice-coil terminals.

R-F COIL NOTE: Check resonance of circuits containing coils L1, L2, and L3 by inserting each end of a tuning wand, such as Philco Part No. 45-8885, into coil. If signal strength increases when powdered-iron end is inserted, compress turns slightly. If signal strength increases when brass end is inserted, spread turns slightly. If signal strength decreases when each end is inserted, no adjustment is necessary. Do not spread or compress turns excessively; only a small change is required at these high frequencies.

FM ALIGNMENT CHART

STEP	SIGNAL GENERATOR		RADIO		ADJUST
	CONNECTION TO RADIO	DIAL SETTING	DIAL SETTING	SPECIAL INSTRUCTIONS	
1	Through a .1-μf. condenser to pin 1 of 6AU6*.	9.1 mc. ±80 kc. deviation.	Gang fully meshed.	Adjust TC10 for correct crossover. Adjust TC 9 for maximum and equal peaks. Repeat.	TC10—FM det. sec. TC9—FM det. pri.
2	1-μf. condenser to pin 1 of 6BA6*.	9.1 mc. ±80 kc. deviation.	Gang fully meshed.	Adjust, in order given, for maximum and equal peaks. Repeat.	TC8—FM 2nd i-f sec. TC7—FM 2nd i-f pri.
3	Through a .1-μf. condenser to pin 1 of 7F8/S*.	9.1 mc. ±80 kc. deviation.	Gang fully meshed.	Adjust, in order given, for maximum and equal peaks. Repeat.	TC4—FM 1st i-f sec. TC3—FM 1st i-f pri.
4	Through a 300-ohm dummy aerial to FM aerial socket.	108 mc.	108 mc.	Adjust trimmer for maximum reading on output meter.	C23—FM osc.
5	Same as step 4.	105 mc.	105 mc.	Adjust for maximum while rocking gang.	C1D—FM r-f C1A—FM aerial
6	Same as step 4.	92 mc.	92 mc.	Adjust coils, in order given, for proper resonance (see R-F COIL NOTE).	L3—FM osc. coil L2—FM r-f coil L1—FM aerial coil

*CAUTION: Do not overload! When aligning the i-f stages, the curve will be distorted or destroyed if too great a signal is used. To check, attenuate the signal input. If the curve changes in form, rather than merely decreasing in multitude, the stage is overloaded.

©John F. Rider

Compliments of www.nucow.com

MODELS 51-1733,
51-1733(L), 51-1734

REPLACEMENT PARTS LIST

NOTE

Part numbers marked with an asterisk (*) are general replacement items. These numbers may not be identical to those on factory parts; also, the electrical values of some replacement items may differ from the values indicated in the schematic diagram and parts list. The values substituted in any case are so chosen that the operation of the instrument will be either unchanged or improved. When ordering replacements, use only the "Service Part No."

Reference Symbol	Description	Service Part No.
C1	Condenser, 6-gang tuning	31-2750
C2	Condenser, trimmer, ant. shunt	31-6473-6
C3	Condenser, d-c blocking, 470 μμf.	62-147001001
C4	Condenser, cathode by-pass, 100 μμf.	60-10105017
C5	Condenser, a-v-c filter, 100 μμf.	62-110001001
C6	Condenser, filament by-pass, 100 μμf.	62-110001001
C7	Condenser, screen by-pass, 1500 μμf.	62-215001001
C8	Condenser, plate decoupling, 1500 μμf.	62-215001001
C9	Condenser, by-pass, 100 μμf.	62-110001001
C10	Condenser, d-c blocking, 51 μμf.	62-051009001
C11	Condenser, temperature compensating, 10 μμf.	62-010009001
C12	Condenser, by-pass, .01 μf.	61-0120*
C13	Condenser, plate decoupling, 100 μμf.	62-110001001
C14	Condenser, d-c blocking, 220 μμf.	62-122001001
C15	Condenser, d-c blocking, phono coupling, .0033 μf.	45-3505-55*
C16	Condenser, plate decoupling, .05 μf.	61-0122*
C17	Condenser, grid by-pass, 100 μμf.	62-110001001
C18	Condenser, filament by-pass, 100 μμf.	62-110001001
C19	Condenser, cathode by-pass, 100 μμf.	62-110001001
C20	Condenser, d-c blocking, 220 μμf.	62-122001001
C21	Condenser, d-c blocking, .01 μf.	30-1226-10
C22	Condenser, osc. series padder	31-6473-7
C23	Condenser, trimmer, FM osc.	31-6511
C24	Condenser, phono tone compensation, .001 μf.	45-3500-5*
C25	Condenser, line by-pass, .01 μf.	45-3505-41*
C26	Condenser, plate decoupling, 100 μμf.	62-110001001
C27	Condenser, plate decoupling, .01 μf.	61-0120*
C28	Condenser, a-v-c decoupling, .01 μf.	61-0120*
C29	Condenser, a-v-c filter, 100 μμf.	62-110001001
C30	Condenser, filament by-pass, 100 μμf.	62-110001001
C31	Condenser, filament by-pass, .01 μf.	61-0120*
C32	Condenser, screen by-pass, .002 μf.	61-0062*
C33	Condenser, plate decoupling, .01 μf.	61-0120*
C34	Condenser, cathode by-pass, .01 μf.	61-0120*
C35	Condenser, filament by-pass, 100 μμf.	62-110001001
C36	Condenser, screen by-pass, .002 μf.	61-0062*
C37	Condenser, neutralization, .01 μf.	61-0120*
C38	Condenser, plate decoupling, 100 μμf.	62-110001001
C39	Condenser, i-f filter, 220 μμf.	62-122001001
C40	Condenser, i-f filter, 100 μμf.	62-110001001
C41	Condenser, de-emphasis, .002 μf.	61-0062*
C42	Condenser, d-c blocking, a-v-c rectifier coupling, 15 μμf.	62-015400021*
C43	Condenser, i-f filter, 100 μμf.	62-110001001
C44	Condenser, by-pass, .01 μf.	61-0120*
C45	Condenser, by-pass, 100 μμf.	62-110001001
C46	Condenser, electrolytic, diode load filter, 2 μf.	30-2417-7
C47	Condenser, a-v-c filter, .01 μf.	61-0120*
C48	Condenser, tone compensation, 100 μμf.	62-110001001
C49	Condenser, d-c blocking, .02 μf.	61-0108*
C50	Condenser, bass boost, .03 μf.	30-4517
C51	Condenser, d-c blocking, .006 μf.	45-3500-7*
C52	Condenser, i-f by-pass, 100 μμf.	62-110001001
C53	Condenser, treble out, .006 μf.	45-3500-7*
C54	Condenser, plate by-pass, 100 μμf.	62-110001001
C55	Condenser, d-c blocking, .006 μf.	45-3500-7*
C56	Condenser, grid by-pass, 220 μμf.	62-122001001
C57	Condenser, neutralization, 100 μμf.	62-110001001
C58	Condenser, tone compensation, .006 μf.	45-3500-7*
C59	Condenser, electrolytic, 4-section	30-2570-64
C59A	Condenser, filter, 40 μf., 400 wv.	Part of C59
C59B	Condenser, filter, 60 μf., 400 wv.	Part of C59
C59C	Condenser, filter, 40 μf., 350 wv.	Part of C59
C59D	Condenser, cathode by-pass, 10 μf., 25 wv.	Part of C59
C60	Condenser, line by-pass, .01 μf.	45-3505-41*
I1	Pilot lamp	34-2064
I2	Pilot lamp	34-2064
I3	Bin lamp, model 51-1734 only	34-2064
J1	Socket, FM aerial	27-6214-1
J2	Socket, AM aerial	27-6214-14
J3	Socket, speaker	27-6214-12
J4	Socket, FM test	27-6180
J5	Socket, phono input	27-6126*
J6	Socket, phono power	27-6182
L1	Coil, FM aerial	32-4415
L2	Coil, FM r-f	32-4416
L3	Coil, FM osc.	32-4414
L4	Coil, AM aerial	32-4413
L5	Coil, AM osc.	32-4153-6
L6	Choke, aerial isolating	32-4061-2
L7	Choke, plate load	32-4061-2
L8	Choke, plate load	32-4061-2
LA1	Loop aerial, AM	
	Model 51-1733	76-4337-8
	Model 51-1734	76-4337-13
LA2	Line cord aerial FM	41-3791-1
LS1	Speaker	
	Model 51-1733	36-1610-6
	Model 51-1734	36-1610-7
R1	Resistor, grid return, 2.2 megohms	66-5228340*
R2	Resistor, cathode bias, 47 ohms	66-0478340*
R3	Resistor, screen dropping, 10,000 ohms	66-3108340*
R4	Resistor, plate isolating, 1000 ohms	66-2108340*
R5	Resistor, plate load, 68,000 ohms	66-3688340*

©John F. Rider

Compliments of www.nucow.com

MODELS 51-1733, 51-1733(L), 51-1734

REPLACEMENT PARTS LIST (Cont.)

Reference Symbol	Description	Service Part No.
R6	Resistor, plate load, 10,000 ohms	66-3108340*
R7	Resistor, plate load, 27,000 ohms	66-3278340*
R8	Resistor, plate isolating, 33,000 ohms	66-3338340*
R9	Resistor, grid return, 15,000 ohms	66-3158340*
R10	Resistor, grid return (phono), 330,000 ohms	66-4338340*
R11	Resistor, cathode bias, 6800 ohms	66-2688340*
R12	Resistor, parasitic suppressor, 470 ohms	66-1478340*
R13	Resistor, parasitic suppressor, 1000 ohms	66-2108340*
R14	Resistor, crystal load, 1 megohm	66-5108340*
R15	Resistor, plate isolating, 1000 ohms	66-2108340*
R16	Resistor, a-v-c isolating, 1 megohm	66-5108340*
R17	Resistor, grid return, 1 megohm	66-5108340*
R18	Resistor, cathode bias, 47 ohms	66-0478340*
R19	Resistor, screen dropping, 10,000 ohms	66-3108340*
R20	Resistor, plate isolating, 1000 ohms	66-2108340*
R21	Resistor, grid return, 3300 ohms	66-2338340*
R22	Resistor, cathode bias, 120 ohms	66-1128340*
R23	Resistor, screen dropping, 22,000 ohms	66-3228340*
R24	Resistor, plate isolating, 1000 ohms	66-2108340*
R25	Resistor, diode load, 470,000 ohms	66-4478340*
R26	Resistor, audio filter, 100,000 ohms	66-4108340*
R27	Resistor, i-f filter, 47,000 ohms	66-3478340*
R28	Resistor, i-f filter, 47,000 ohms	66-3478340*
R29	Resistor, voltage divider, 330,000 ohms	66-4338340*
R30	Resistor, voltage divider, 22,000 ohms	66-3228340*
R31	Resistor, FM diode load, 47,000 ohms	66-3478340*
R32	Resistor, a-v-c load, 2.2 megohms	66-5228340*
R33	Resistor, a-v-c filter, 2.2 megohms	66-5228340*
R34	Resistor, grid return, 10 megohms	66-6108340*
R35	Resistor, bass boost, 27,000 ohms	66-3278340*
R36	Volume control	33-5535-27
R37	Resistor, isolating, 100,000 ohms	66-4108340*
R38	Resistor, feedback, 120 ohms	66-1128340*
R39	Resistor, voltage divider, feedback, 4.7 ohms	66-9478340*
R40	Tone control, 4 megohms with switch	33-5566-12
R41	Resistor, plate load, 270,000 ohms	66-4278340*
R42	Resistor, inverse feedback, 2.7 megohms	66-5278340*
R43	Resistor, grid return, 470,000 ohms	66-4478340*
R44	Resistor, cathode bias, 180 ohms, 1 watt	66-1184340*
R45	Resistor, parasitic suppressor, 10 ohms	66-0108340*
R46	Resistor, bleeder, 120,000 ohms, 2 watts	63-4125340*
R47	Resistor, filter, 2200 ohms, 2 watts	33-1335-97
R48	Resistor, filter, 330 ohms, 7 watts	33-1335-90
R49	Resistor, pilot lamp dropping, 1 ohm	66-9108340*
S1	Switch, on-off	Part of R40
T1	Transformer, output	32-8407
T2	Transformer, power	32-8406
W1	Line cord	L-2183*
WS	Wafer switch	42-1910
Z1	Transformer, AM r-f	32-4399-3A
Z2	Transformer, 1st FM i-f	32-4372A
Z3	Transformer, 1st AM i-f	32-4258-3A
Z4	Transformer, 2nd FM i-f	32-4372-2A
Z5	Transformer, 3rd FM i-f	32-4417
Z6	Transformer, 2nd AM i-f	32-4240-3A

MISCELLANEOUS

Description	Service Part No.
Cabinet, Model 51-1733	10825
Cabinet, Model 51-1733 (L)	10825-1
Bullet catch (2)	45-6002
Changer mounting frame	76-6264
Dial scale	54-5103-1
Dome (4)	45-6190
Doors, matched set, Model 51-1733	45-6622
Model 51-1733 (L)	45-6623
Door pull	56-7998
Door pull plate	56-7999
Knife hinge (LH) (2), Model 51-1733	56-8479
Model 51-1733 (L)	56-8479-2
Knife hinge (RH) (2), Model 51-1733	56-8479-1
Model 51-1733 (L)	56-8479-3
Phono power cable and plug assembly	41-3944-5
Strike plate, Model 51-1733	45-6003
Model 51-1733 (L)	45-6003-1
Cabinet, Model 51-1734	10847
Bezel	56-5855FCP
Bin light and phono power socket and cable assembly	41-3944-6
Clip, bin light mounting	56-3545-6
Dial scale	54-5108

(Parts common to all models)

Description	Service Part No.
Changer mounting parts	
Bumper (2)	55-0890
Clip, bottom mounting (4)	W2235-1FA9
Drive screws (8)	IW19432FA1
Frame, Model 51-1733	76-6257
Model 51-1734	76-6296
Knob, pull	56-8496FCP
Screw, knob mounting	1W10078FA3
Rail assembly, (LH), Model 51-1733	76-6258
Model 51-1734	76-6258-1
Rail Assembly, (RH), Model 51-1733	76-6259
Model 51-1734	76-6259-1
Sleeve, rubber (3)	54-7798
Speed nut (3)	W-2554FCP
Spring, changer mounting (3) top (heavy)	56-7059FA9
Spring, changer mounting (3) bottom (light)	56-7059-1FCP
Dial backplate assembly	76-6311
Pilot lamp socket assembly (2)	27-6233-33
Drive shaft assembly	76-5139-1
Bushing, drive shaft	27-9437
Dial cord, 25 foot spool	45-8750*
Spring, drive cords (2)	56-2617
Spring, hairpin, drive shaft retainer	57-1468FA3
Knob (3)	54-4718-6
Knob, band switch	54-4718-12
Pointer	56-5630-18
Scale strap	56-4756FE11
Scale strap (2)	56-2234-2
Socket, Loktal, 5AZ4	27-6207
Socket, Loktal, 7F8/s	27-6207-1
Socket, miniature, 7 pin (4)	27-6265-1
Socket, miniature, 9 pin	27-6203-5
Socket, octal	27-6174
Speaker bolts (4)	W-7002
Washer, fibre, speaker mounting (4)	27-7467

©John F. Rider

Compliments of www.nucow.com

Compliments of www.nucow.com

MODEL A55,
Ch. RC-1087

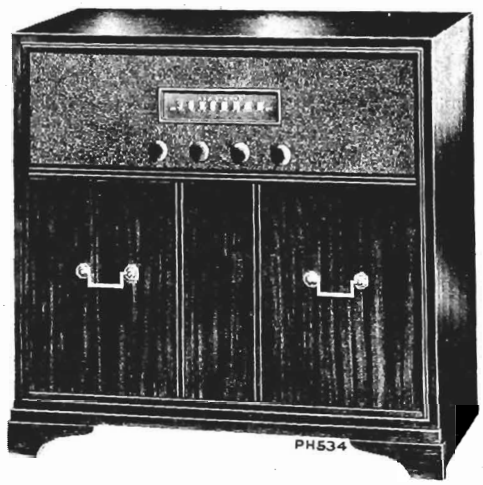

Specifications

Tuning Range .....540-1600 kc

Intermediate Frequency .....455 kc

Tube Complement
(1) RCA 12SA7 .....Converter
(2) RCA 12BA6 .....I.F. Amplifier
(3) RCA 12SQ7.....Det.—AVC.—A.F. Amp.
(4) RCA 50L6GT .....Output
(5) RCA 35Z5GT .....Rectifier

Power Supply Rating .....115 volts, 60 cycles, 50 watts

Loudspeaker
Type 92586-2 ..... 8 in. P.M.
Voice coil impedance .....3.2 ohms at 400 cycles

Tuning Drive Ratio .....12½:1 (6¼ turns of knob)

Dial Lamps (2) .....Type No. 1490, 3.2 volts, .16 amp.

Power Output
Maximum 1.5 watts Undistorted 1 watt

Weight .....67 lbs.

Cabinet Dimensions
Height 29⅛" Width 30⅜" Depth 17"

Record Players (2)
RP 168 .....45 RPM
Record capacity .....up to ten RCA 7 in fine groove
960282-1 ..... 78 or 33 1/3 RPM
Record capacity .....up to ten 12 in. or twelve 10 in.

Alignment Procedure

Output Meter Alignment.—If this method is used, connect the meter across the voice coil and turn the receiver volume control to maximum.

Signal Generator.—For all alignment operations, connect the low side of the signal generator to the receiver chassis and keep the output as low as possible to avoid AVC action.

It may be desirable to use an isolation transformer (117v./117v.) for the receiver if the signal generator is also a.c. operated.

* Alternate loading involves the use of a 22,000 ohm resistor to load the plate winding while the grid winding of the SAME TRANSFORMER is being peaked. Then the grid winding is loaded with the resistor while the plate winding is peaked. Only one winding is loaded at any one time. Remove the 22,000 ohm resistor after T2 and T1 have been aligned.

NOTE: If "alternate loading" is not used during I-F alignment, it **may result in non-symmetrical response.** This is due to the characteristics of the I-F transformers used in this chassis.

Alignment Tabulation

Steps	Connect high side of sig. gen. to—	Adjust sig. gen. to—	Turn radio dial to—	Adjust for max. output—
1	Converter grid (pin #8 of 12SA7) thru a .1 mf. capacitor	455 kc	Quiet point near 1600 kc	T2 top & bottom 2nd I.F.
2				T1 top & bottom 1st I.F.
3	Repeat Steps 1 and 2 using alternate loading*			
4	Short wire placed near loop for radiated signal	1620 kc	Gang fully open	C6 (osc.)
5		1400 kc	1400 kc signal	C3 (ant.)
6		600 kc	600 kc signal	L 2 (osc.) (rock gang)
7	Repeat Steps 4, 5 and 6			

©John F. Rider

Compliments of www.nucow.com

MODEL A55,
Ch. RC-1087

Dial Pointer Position

With the tuning condenser fully meshed, set the dial pointer to the SECOND score mark from the left hand edge of the dial back plate.

Lead Dress

1. Dress all heater leads down to chassis and as far as possible from all audio grid and plate winding.
2. Dress power cord to side apron and away from tone control.
3. Dress capacitor C22 down to chassis and keep leads as short as possible.
4. Dress pilot light leads and phono. power cables to side apron and away from tone control.
5. Dress phono. A.C. leads on function switch away from all other terminals and run leads directly through to front apron.
6. Dress output transformer leads down to chassis.
7. Dress C20 away from chassis and wire with as short leads as possible.
8. Dress excess loop leads away from tubes and clear of gang condenser.
9. Dress lead from tone control to S-1 terminal #7 along chassis base and front apron.

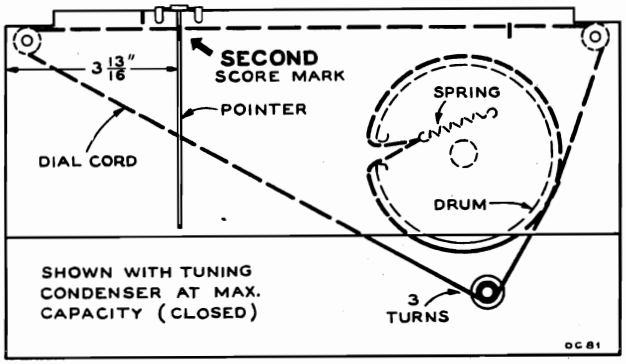

Dial-Indicator and Drive Mechanism

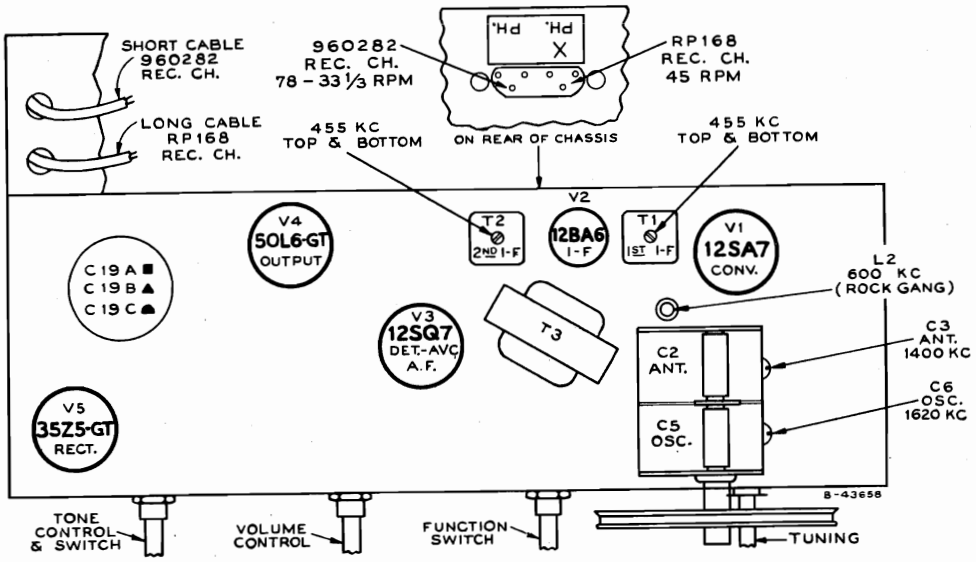

Tube and Trimmer Locations

©John F. Rider

Compliments of www.nucow.com

MODEL A55,
Ch. RC-1087

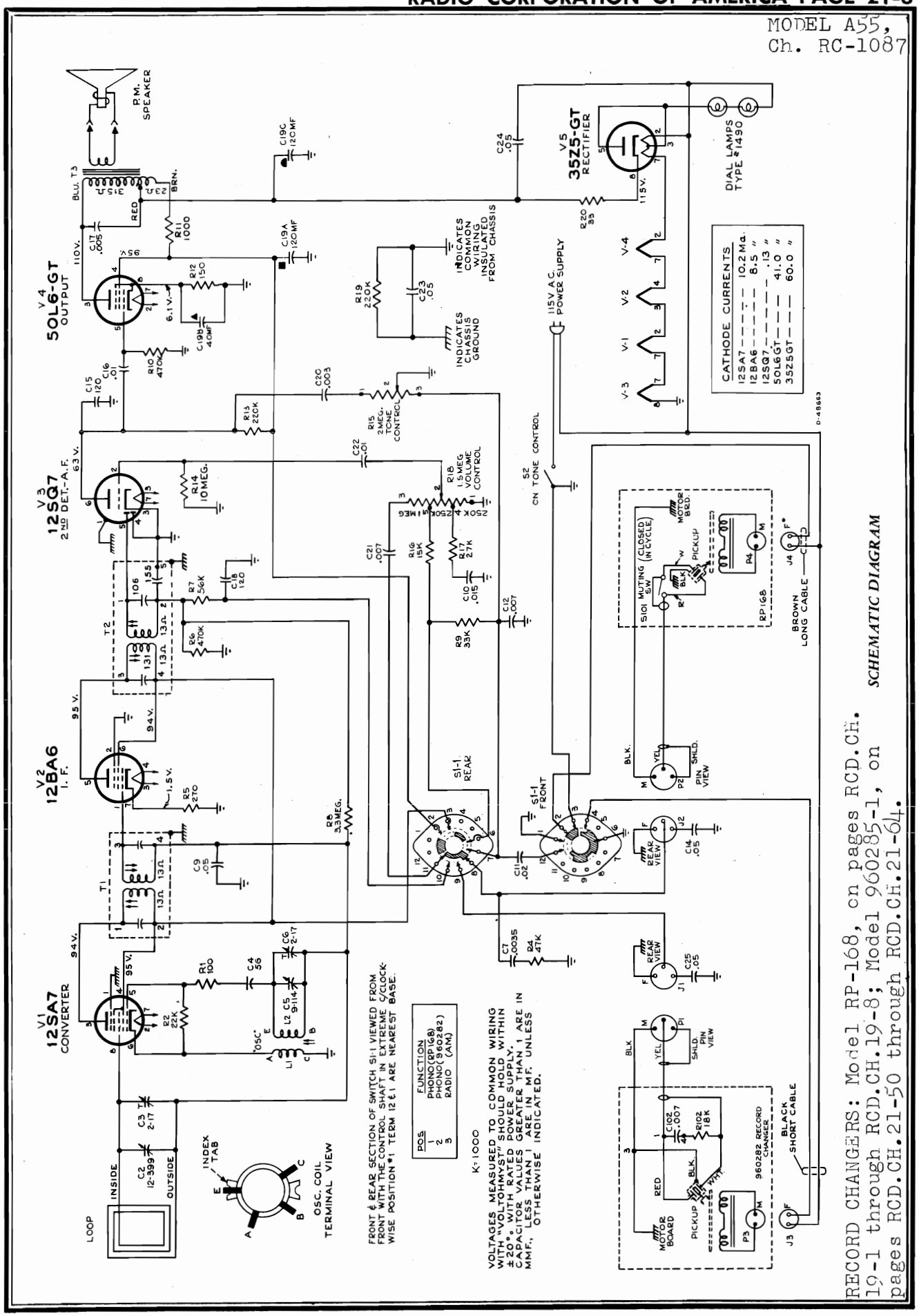

RECORD CHANGERS: Model RP-168, on pages RCD.CH. 19-1 through RCD.CH.19-8; Model 960285-1, on pages RCD.CH.21-50 through RCD.CH.21-64.

©John F. Rider

Compliments of www.nucow.com

MODEL A55,
Ch. RC-1087

Replacement Parts

STOCK NO.	DESCRIPTION
	CHASSIS ASSEMBLIES RC 1087
74763	Capacitor—Variable tuning capacitor, C2, C3, C5, C6
71924	Capacitor—Ceramic, 56 mmf. C4
39630	Capacitor—Mica, 120 mmf. C15, C18
74678	Capacitor—Electrolytic, comprising 2 sections of 120 mfd., 150 volts and 1 section of 40 mfd., 25 volts C19A, C19B, C19C
70603	Capacitor—Tubular, paper, .003 mfd., 400 volts C20
70604	Capacitor—Tubular, paper, .0035 mfd., 400 volts....C7
73920	Capacitor—Tubular, paper, .005 mfd., 400 volts ..C17
70608	Capacitor—Tubular, paper, .007 mfd., 400 volts C12, C21
73561	Capacitor—Tubular, paper, .01 mfd., 400 volts, C16, C22
70572	Capacitor—Tubular, paper, .015 mfd., 400 volts ..C10
70611	Capacitor—Tubular, paper, .02 mfd., 400 volts C11
73553	Capacitor—Tubular, paper, .05 mfd., 400 volts, C9, C14, C23, C24, C25
73935	Clip—Mounting clip for I.F. transformer
74448	Coil—Oscillator coil L1, L2
30868	Connector—2 contact female connector for motor cable J3, J4
71596	Control—Volume control R18
74761	Control—Tone control and power switch R15, S2
71457	Cord—Power cord and plug
†72953	Cord—Drive cord (approx. 48" overall length required.)
74838	Grommet—Power cord strain relief (1 set)
72283	Grommet—Rubber grommet to mount tuning capacitor.
74765	Indicator—Station selector indicator
71116	Lamp—Dial lamp—Type #1490
74766	Loop—Antenna loop assembly
72776	Pin—Contact pin for speaker lead
75047	Plate—Dial back plate complete with two (2) pulleys less dial
18469	Plate—Bakelite mounting plate for electrolytic capacitor
74767	Receptacle—Dual phono input receptacle J1, J2
74768	Resistor—Wire wound, 33 ohms, 1 watt R20
	Resistors—Fixed, composition:—
	100 ohms, ±20%, ½ watt R1
	150 ohms, ±10%, ½ watt R12
	270 ohms, ±10%, ½ watt R5
	1000 ohms, ±10%, 1 watt R11
	15,000 ohms, ±10%, ½ watt R16
	22,000 ohms, ±10%, ½ watt R2
	27,000 ohms, ±10%, ½ watt R17
	33,000 ohms, ±10%, ½ watt R9
	47,000 ohms, ±10%, ½ watt R4
	56,000 ohms, ±10%, ½ watt R7
	220,000 ohms, ±10%, ½ watt R13, R19
	470,000 ohms, ±10%, ½ watt R6, R10
	3.3 megohm, ±20%, ½ watt R8
	10 megohm, ±20%, ½ watt R14
74764	Shaft—Tuning knob shaft
73117	Socket—Tube socket, miniature for 12BA6
31251	Socket—Tube socket, octal wafer
74014	Socket—Dial lamp socket
74038	Spring—Drive cord tension spring
74762	Switch—Function switch S1
74918	Transformer—First I.F. transformer T1
73037	Transformer—Second I.F. transformer T2
74677	Transformer—Output transformer T3
33726	Washer—"C" washer for tuning knob shaft
	SPEAKER ASSEMBLIES 92586-2 RL 105C2
74758	Cone—Cone and voice coil assembly
74679	Speaker—8" P.M. speaker complete with cone and voice coil
	NOTE:—If stamping on speaker in instrument does not agree with above speaker number, order replacement parts by referring to model number of instrument, number stamped on speaker and full description of part required.
	MISCELLANEOUS
74205	Bezel—Dial bezel less dial
70608	Capacitor—Tubular, paper, .007 mfd., 400 volts ..C102
74298	Clamp—Dial clamp (2 req'd)
X3115	Cloth—Grille cloth for mahogany or walnut instruments
X3116	Cloth—Grille cloth for oak instruments
74192	Connector—3 contact male connector for pickup cables P1, P2
74581	Cover—Mounting screw cover—use with #74582 screw (3 req'd)
71910	Decal—Trade mark decal
74771	Decal—Control panel function decal for mahogany or walnut instruments
74772	Decal—Control panel function decal for oak instruments
74769	Dial—Glass dial scale
74206	Grommet—Rubber grommet to mount 960282 record changer
74931	Knob—Tuning control, volume control or tone control and power switch knob—maroon—for mahogany or walnut instruments
72824	Knob—Tuning control, volume control, function switch or tone control and power switch knob—brown—for oak instruments
74934	Knob—Function switch knob—maroon—for mahogany or walnut instruments
74208	Nut—Tee nut to mount RP168 record changer (3 req'd)
74770	Pull—Door pull
	Resistor—Fixed, composition:
	18,000 ohms, ±10%, ½ watt R102
74582	Screw—#8-32 x 1¾" special head screw to mount RP168 record changer (3 req'd)
74269	Screw—#8-32 x ¾" trimit head screw for door pull
74422	Spring—Conical spring to mount RP168 record changer—upper—L.H.—(2 req'd)
74421	Spring—Conical spring to mount RP168 record changer—upper—R.H.—(1 req'd)
74423	Spring—Conical spring to mount RP168 record changer—lower—(3 req'd)
30900	Spring—Retaining spring for knobs
75040	Spring—Mounting spring for 960282 record changer

†Stock No. 72953 is a reel containing 250 feet of cord.

©John F. Rider

Compliments of www.nucow.com

MODELS A78,
9W78, Ch. RC-1084A

PH 471

Specifications

Tuning Ranges

Standard Broadcast (AM) ..... 540-1,600 kc.
Frequency Modulation (FM) ..... 88-108 mc.

Intermediate Frequency.....AM—455 kc., FM—10.7 mc.

Tube Complement

(1) 6J6..... Mixer and Oscillator
(2) 6BA6..... I. F. Amplifier
(3) 6AU6..... Driver
(4) 6AL5..... Ratio Detector
(5) 6AV6..... AM Det.—AVC—A. F. Amp.
(6) 6V6GT..... Output
(7) 6X5GT..... Rectifier

Power Supply Rating..... 115 volts, 60 cycles, 70 watts

Loudspeaker

Type 92569-9 .....12 in. P.M.
Voice coil impedance at 400 cycles .....3.2 ohms

Tuning Drive Ratio .....18:1 (9 turns of knob)

Pilot Lamps (3) .....Type No. 51, 6-8 volts, 0.2 amp.

Power Output

Maximum .....5 watts
Undistorted .....2 watts

Antennas:

This receiver has built-in antennas for standard broadcast (AM) and frequency modulation (FM) reception.

Under average conditions the (FM) antenna will provide satisfactory reception. However, provision is made for the use of external antennas if desired—connect as indicated below:

FM Antenna: Connect the transmission line from an external FM dipole antenna to "FM" and "G" terminals. Remove the internal FM antenna wire from terminal "FM."

Record Player (2)

RP168 ..... 45 RPM
RP178 ..... 78 RPM

For information on 45 RPM changer refer to RCA Victor RP168 Series Service Data 3rd Ed.

For information on 78 RPM changer refer to RCA Victor RP178 Series Service Data.

Circuit Description

The chassis used in these receivers have a 6J6 tube (V1) (twin triode), one section of which is used as mixer and the other section as oscillator. The FM antenna coil and the FM oscillator coil are placed in such position as to provide coupling between them. A section of the AM oscillator coil is connected in series with the mixer grid input when the range switch is in AM position.

Dual I-F transformers are used, each transformer containing both AM and FM windings. The I-F amplifier is V2 (6BA6).

The range switch has four functions:

(1) Selection of AM, FM ranges or Phono.

(2) Selection of AVC supply voltages to be applied to the controlled tubes. Simple AVC is applied to the grids of V1 and V2 on AM. Delayed AVC is used on FM and is applied only to the grid of V2.

(3) Controls application of B+ voltage to the plate circuits of V1 (disconnected for PHONO operation).

(4) Controls audio input to volume control.

The driver V3 (6AU6) and ratio detector V4 (6AL5) circuits are similar to those used in other RCA Victor AM-FM receivers.

The audio voltage controlled by the volume control is amplified by V5 (6AV6) and V6 (6V6GT).

The rectifier V7 is type 6X5GT.

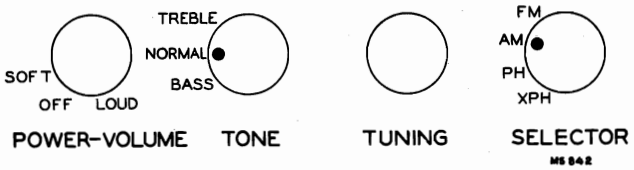

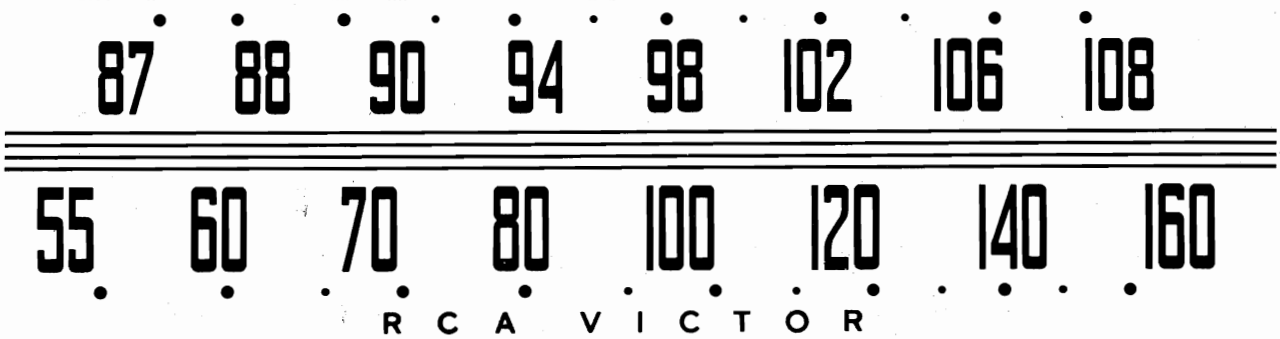

Dial Scale Actual Size

©John F. Rider

Compliments of www.nucow.com

MODELS A78,
9W78, Ch. RC-1084A

Alignment Procedure

CORRECT ALIGNMENT OF THE FM BAND REQUIRES THAT THE AM BAND BE ALIGNED FIRST

Alignment Indicators:

An RCA VoltOhmyst or equivalent meter is necessary for measuring developed d-c voltage during FM alignment. Connections are specified in the alignment tabulation. An output meter is also necessary to indicate minimum audio output during FM Ratio Detector alignment. Connect the output meter across the speaker voice coil.

The RCA VoltOhmyst can also be used as an AM alignment indicator, either to measure audio output or to measure a-v-c voltage.

When audio output is being measured the volume control should be turned to maximum.

Signal Generator:

For all alignment operations connect the low side of the signal generator to the receiver chassis. The output should be adjusted to provide accurate resonance indication at all times. If output measurement is used for AM alignment the output of the signal generator should be kept as low as possible to avoid a-v-c action.

Oscilloscope Alignment:

The FM I. F. alignment may be checked using a sweep generator and an oscilloscope. Shunt terminals B and C of T4 with a 1200 ohm resistor. Connect the high side of the oscilloscope to term. C of T4 in series with a diode probe. Apply the output of the sweep generator (10.7 mc with ±250 kc sweep) to pin No. 1 of V2 (6BA6) in series with .01 mf., low side of the oscilloscope and sweep generator to chassis. This will show the response of T3.

To check the combined response of T2 and T3; connect the sweep generator to the antenna terminal board—high side to "FM" term. in series with 300 ohms and low side to "G" terminal. Oscilloscope connections as previously connected.

To check the ratio detector response; remove the 1200 ohm resistor previously used, connect the high side of the oscilloscope direct to term. No. 9 of S1, low side to chassis. Apply the output of the sweep generator to pin No. 1 of V3 (6AU6) in series with .01 mf. **Note:** It is difficult to observe marker signals in this step—center frequency and sweep width should be previously observed.

Critical Lead Dress

1. Short leads on C7.
2. Dress R27 away from switch and Pin 5 of V1.
3. Ground lead on Pin 2 of V2 & V3 should be down against chassis. Its length is critical.
4. A.V.C. lead from R26 to switch should be dressed against chassis and on front apron side of output transformer.
5. C43 should have short leads and color code end of capacitor should go to coil. Capacitor is to be cemented down with polystyrene cement the same time L2 is.
6. High side loop lead should be dressed away from tubes.
7. Lead from Pin 2 and V1 to terminal A of first dual I.F. transformer should be dressed against chassis.
8. Wire C40 directly between gang condenser and Pin 1 of V1.
9. Keep all the F.M. leads as short as possible.
10. Dress lead from Pin 5 of V2 to terminal A of T3 down against chassis.
11. Dress resistor R15 near chassis base.
12. Dress all A.C. leads away from volume control.
13. Run lead from F.M. Terminal on the antenna terminal board to L2 tap around the can of T2 and away from V2.
14. The taps on L1 & L2 are critical.
15. The lead from R32 to terminal 10 of S1 should be dressed away from the output transformer, T5.
16. Dress C25 and C26 against chassis with the shortest lead length possible..
17. Coupling between pins 5 & 6 of VI, and the components attached, should be kept to a minimum.
18. Coupling between L1 & L2 should be adjusted to give the proper oscillator injection voltage to the mixer grid.

AM Alignment

RANGE SWITCH IN BC POSITION

Steps	Connect high side of sig. gen. to—	Sig. gen. output	Turn radio dial to—	Adjust for peak output
1	C3 in series with .01 mfd.	455 kc.	Quiet point at low freq. end.	AM windings.† T3 bottom core (sec.). T3 top core (pri.).
2				AM windings.† T2 top core (sec.). T2 bottom core (pri.).
3	"A" terminal of terminal board at rear of chassis in series with 220 mmf.	1400 kc.	1400 kc.	C13 osc. C4 ant.
4		600 kc.	600 kc.	L4 osc. (Rock gang.)
5	Repeat Steps 3 and 4.			

† Use alternate loading.

Alternate loading involves the use of a 47,000 ohm resistor to load the AM plate winding while the AM grid winding of the SAME TRANSFORMER is being peaked. Then the grid winding is loaded with the resistor while the plate winding is peaked. Only one winding is loaded at any one time. Remove the 47,000 ohm resistor after T3 and T2 have been aligned.

Oscillator frequency is above signal frequency on both AM and FM.

FM Alignment

RANGE SWITCH IN FM POSITION—VOLUME CONTROL MAXIMUM

Steps	Connect high side of sig. gen. to—	Sig. gen. output	Turn radio dial to—	Adjust for peak output
1	Connect the d-c probe of a VoltOhmyst to the negative lead of the 2 mfd. capacitor C33 and the common lead to chassis. Turn gang condenser to max. capacity (fully meshed).			
2	Pin 1 of 6AU6 in series with .01 mfd.	10.7 mc. modulated 30% 400 cycles AM (Approx. .05 volt).	Max. capacity (fully meshed)	T4 top core for max. d-c voltage across C33. T4 bottom core for min. audio output.*
3	FM ant. term in series with a 300 ohm resistor. (Remove ant. lead from "FM" term.)	10.7 mc. Adjust to provide 2 to 3 volts indication on VoltOhmyst during alignment.		FM windings.†† T3 top core (sec.). T3 bottom core (pri.).
4				FM windings.†† T2 top core (sec.). T2 bottom core (pri.).
5		106 mc.	106 mc.	L2 osc.** C2 ant. Set C2 at max. capacity while adjusting L2.
6		90 mc.	90 mc.	L1 ant.** (Rock gang.)
7	Repeat Steps 5 and 6 until further adjustment does not improve calibration.			

* Two or more points may be found which lower the audio output. At the correct point the minimum audio output is approached rapidly and is much lower than at any incorrect point.

†† Align T3 and T2 by means of alternate loading as explained under AM alignment. Use a 680 ohm resistor instead of a 47,000 ohm resistor and load the FM windings.

** L1 and L2 are adjustable by increasing or decreasing the spacing between turns.

© John F. Rider

Compliments of www.nucow.com

MODELS A78,
9W78, Ch. RC-1084A

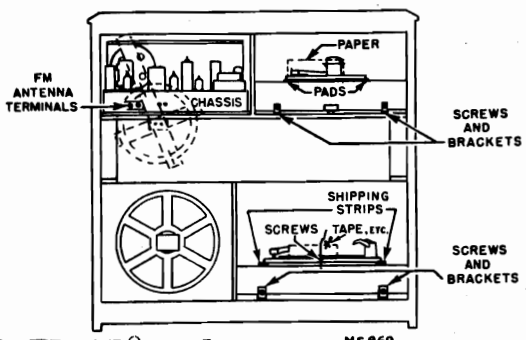

MODEL A78 only

Back View of Cabinet Showing Shipping Material

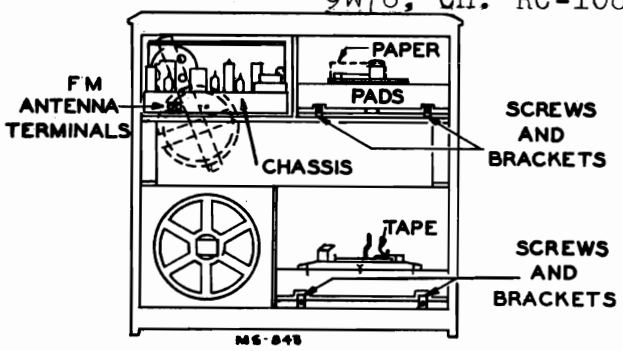

Back View of Cabinet Showing Shipping Material

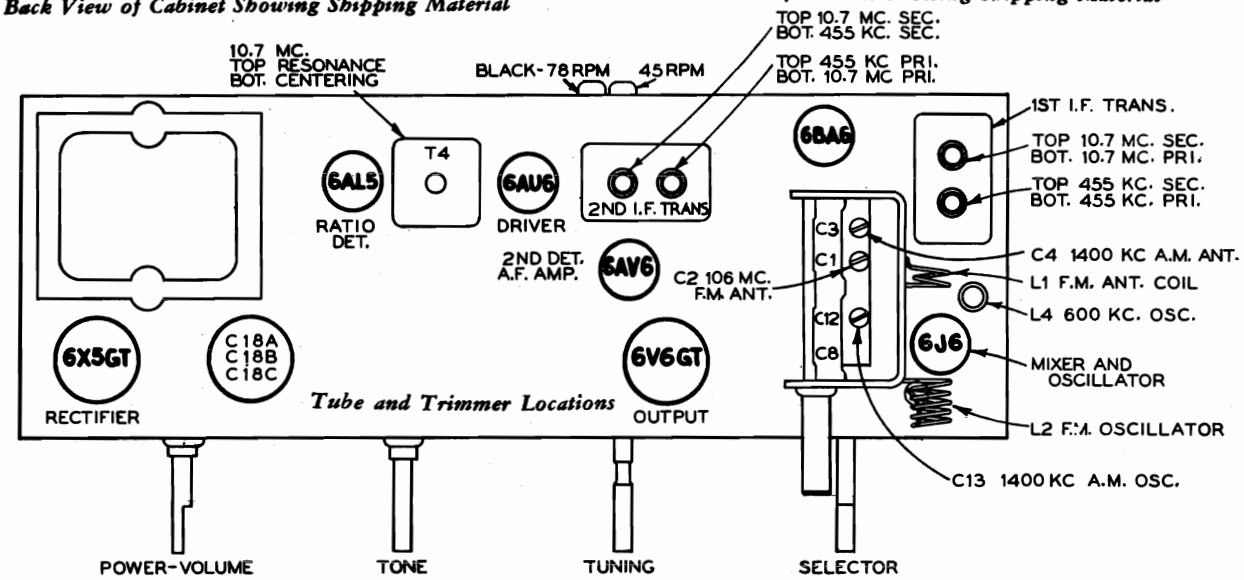

Tube and Trimmer Locations

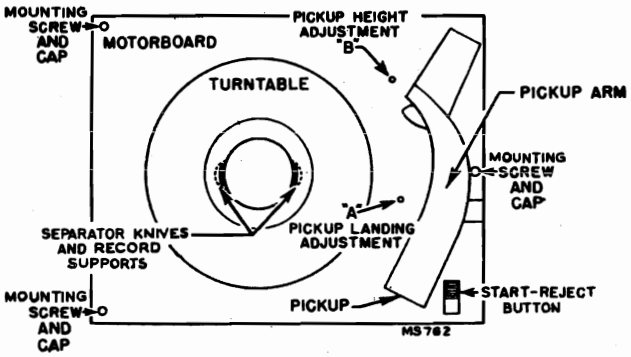

Top View—RP-168A-1 Record Changer

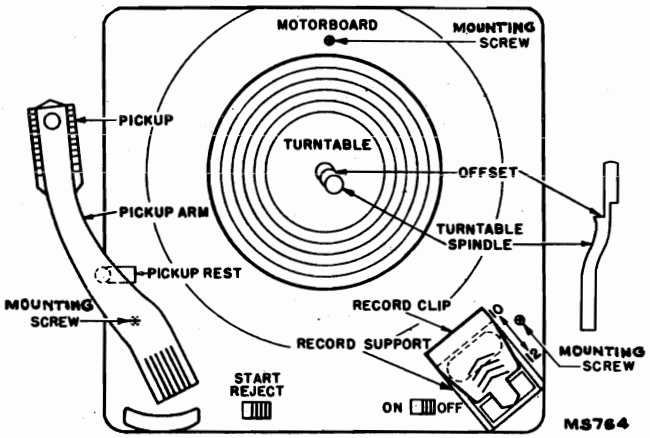

Top View—RP-178 Record Changer

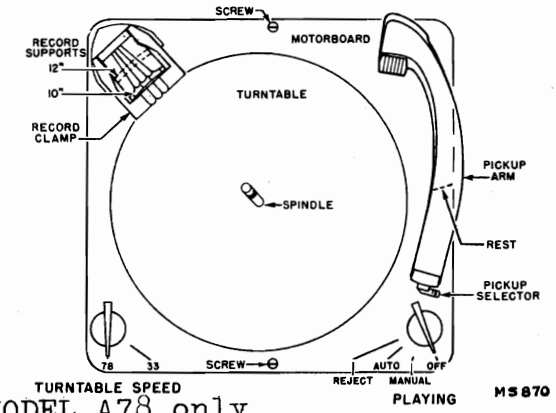

MODEL A78 only

Top View—RP-178 Record Changer

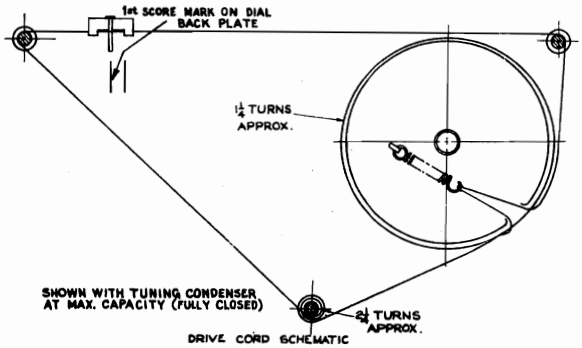

Dial Indicator and Drive Mechanism

©John F. Rider

Compliments of www.nucow.com

MODELS A78,
9W78, Ch. RC-1084A

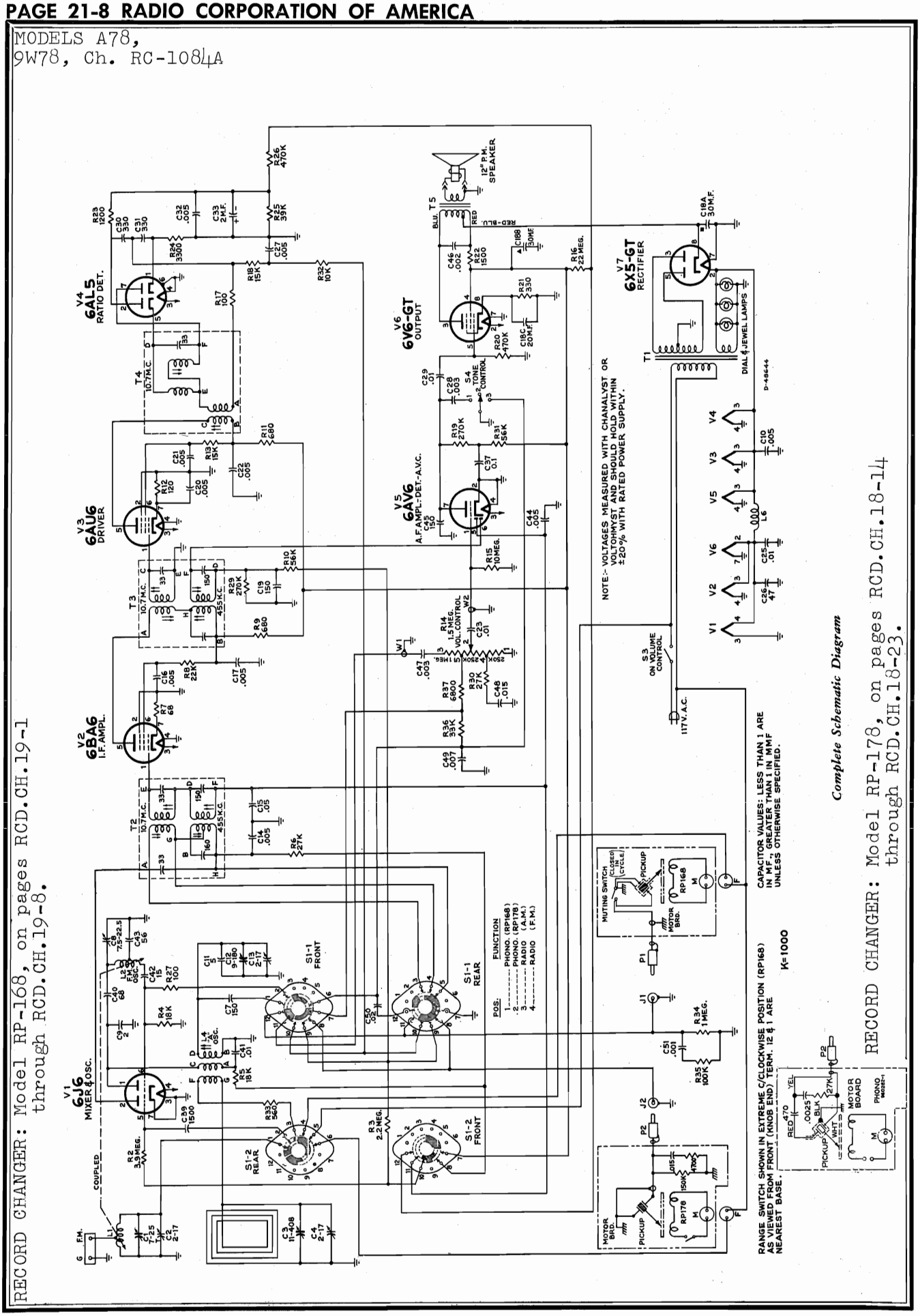

Complete Schematic Diagram

RECORD CHANGER: Model RP-168, on pages RCD.CH.19-1 through RCD.CH.19-8.

RECORD CHANGER: Model RP-178, on pages RCD.CH.18-14 through RCD.CH.18-23.

© John F. Rider

Compliments of www.nucow.com

MODEL 9W78,
Ch. RC-1084A

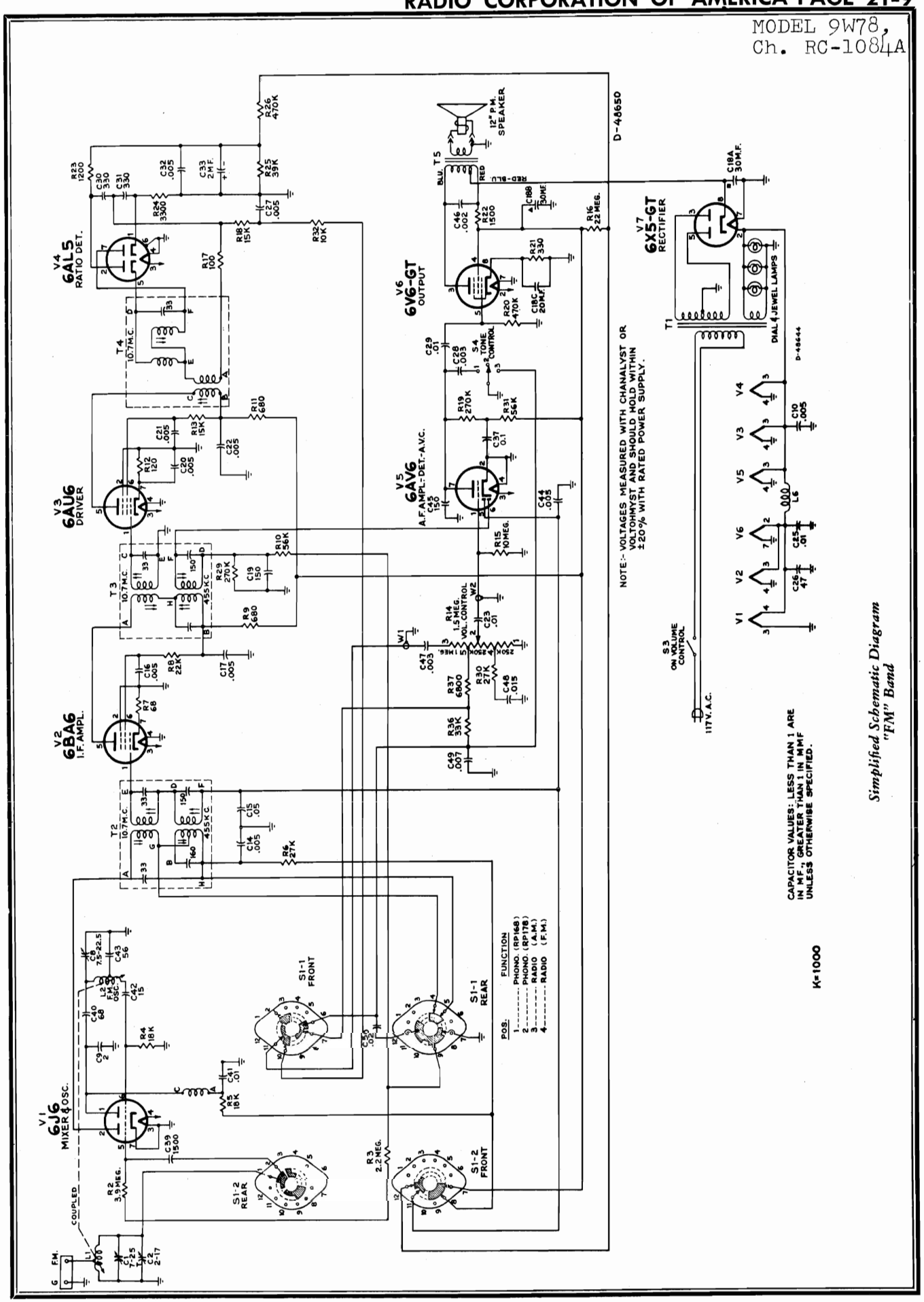

Simplified Schematic Diagram "FM" Band

© John F. Rider

Compliments of www.nucow.com

MODEL 9W78,
Ch. RC-1084A

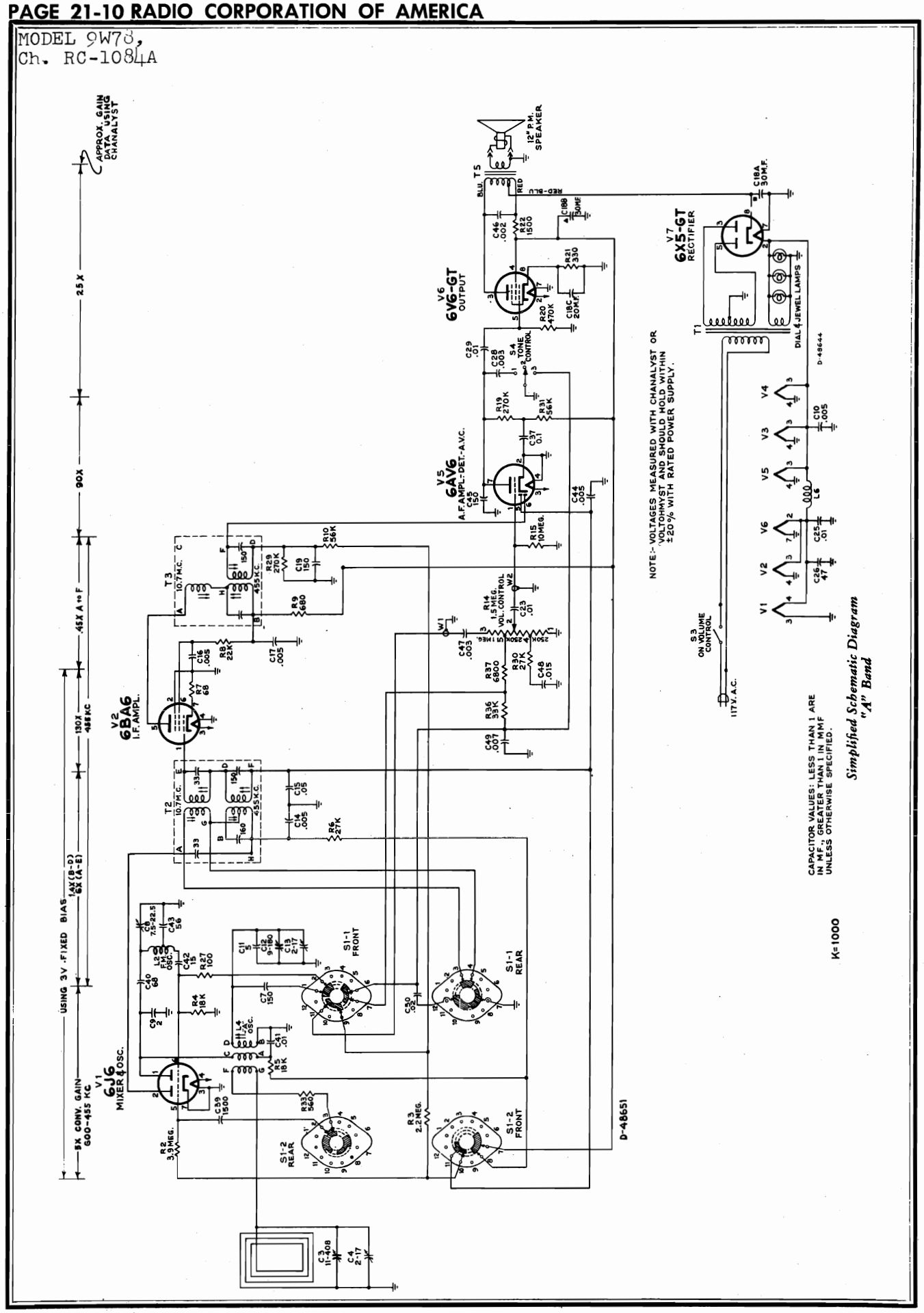

Simplified Schematic Diagram "A" Band

©John F. Rider

Compliments of www.nucow.com

MODELS A78, 9W78, Ch. RC-1084A

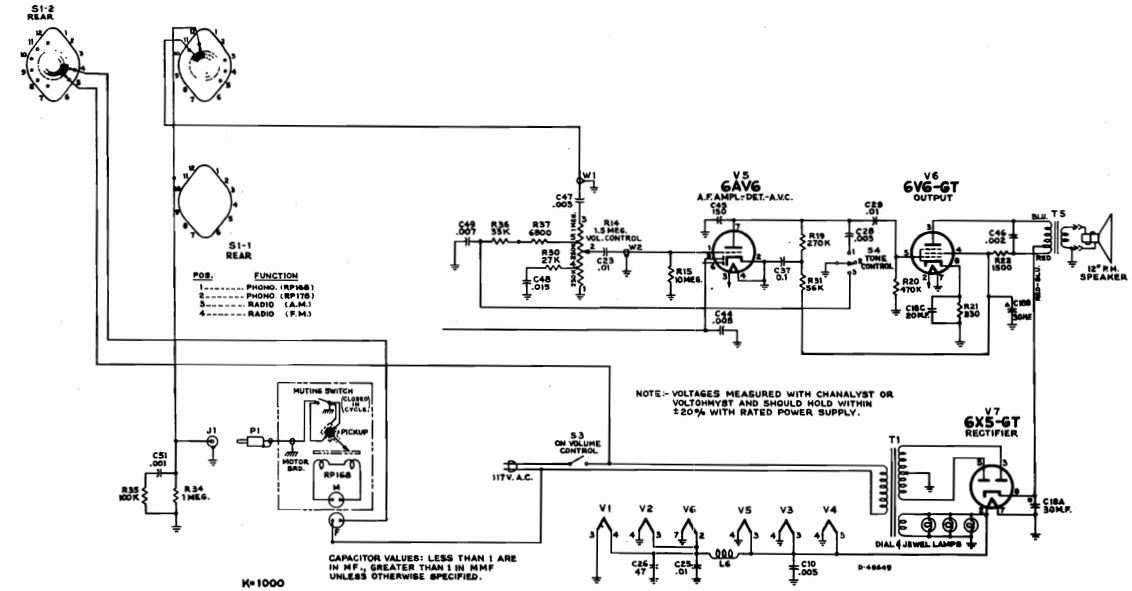

Simplified Schematic Diagram
45 RPM Phono

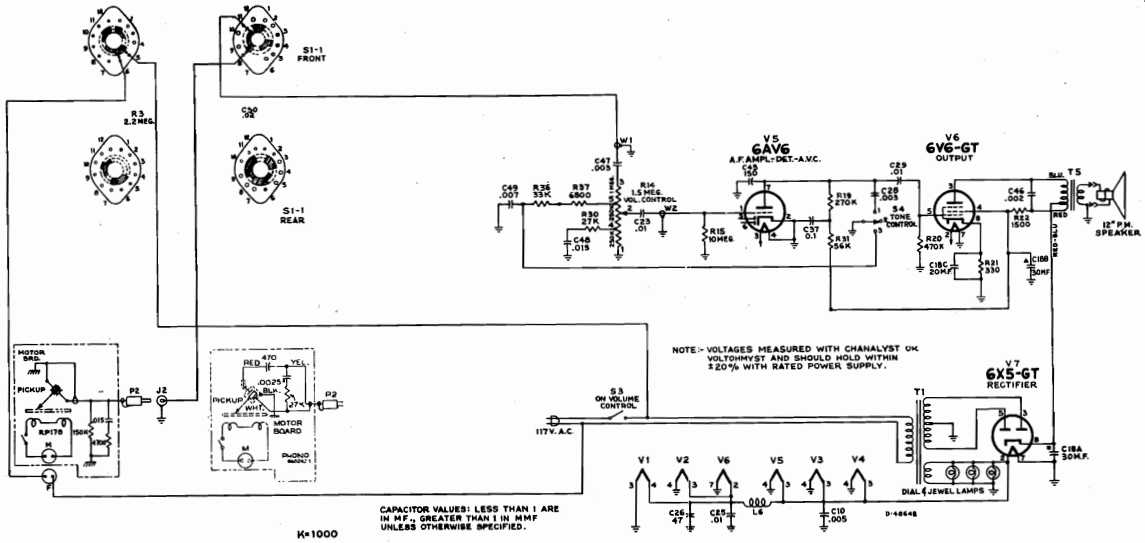

Simplified Schematic Diagram
78 RPM Phono

Voltage Chart

Tube	Type		Pin No.	"A"	"FM"	Phono
1	6J6	Plate Plate Grid Grid	1 2 6 5	108 94 -6.8 -3.0	106 109 -6.7 -2.5	—— —— —— ——
2	6BA6	Plate Screen Cathode Grid	5 6 7 1	185 110 0.75 -1.6	180 94 0.88 -0.5	—— —— —— ——
3	6AU6	Plate Screen Cathode	5 6 7	184 132 1.1	180 130 1.1	—— —— ——
4	6AL5	——	—	——	——	——
5	6AV6	Plate Grid	7 1	74 -0.8	74 -0.8	90 ——
6	6V6GT	Plate Screen Cathode	3 4 8	243 193 9.7	242 190 9.5	250 263 14.5
7	6X5GT	Cathode	8	250	250	270

Cathode Currents (MA)

1	6J6		7	8.6	8	——
2	6BA6		7	12	13	——
3	6AU6		7	13.5	13.5	——
4	6AL5		1 & 2	——	——	——
5	6AV6		2	0.3	0.3	0.55
6	6V6GT		8	28.2	27.6	44.5
7	6X5GT		8	63	62.2	45

Voltages and currents measured with tuning condenser closed and no signal input should hold within ±20% with rated line voltage.

Note: Plate voltage removed from 6J6 mixer and oscillator tube during "Phono" operation.

©John F. Rider

Compliments of www.nucow.com

MODELS A78,
9W78, Ch. RC-1084A

Replacement Parts

STOCK NO.	DESCRIPTION
	CHASSIS ASSEMBLIES RC1084A
73893	Board—"F. M." terminal board
73889	Capacitor—Variable tuning capacitor (C1, C2, C3, C4, C8, C12, C13)
73866	Capacitor—Ceramic, 2 mmf. (C9)
93056	Capacitor—Ceramic, 5 mmf. (C11)
39044	Capacitor—Ceramic, 15 mmf. (C42)
73372	Capacitor—Electrolytic comprising 1 section of 30 mfd., 350 volts, 1 section of 30 mfd., 300 volts and 1 section of 20 mfd., 25 volts (C18A, C18B, C18C)
39042	Capacitor—Ceramic, 47 mmf. (C26)
73867	Capacitor—Ceramic, 56 mmf. (C43)
33379	Capacitor—Ceramic, 68 mmf. (C40)
48125	Capacitor—Ceramic, 150 mmf. (C7, C19, C45)
39640	Capacitor—Mica, 330 mmf. (C30, C31)
73748	Capacitor—Ceramic, 1500 mmf. (C39)
73473	Capacitor—Ceramic, 5,000 mmf. (C44, C10)
73747	Capacitor—Electrolytic, 2mfd., 50 volts (C33)
73186	Capacitor—Tubular, paper, .001 mfd., 400 volts (C51)
71927	Capacitor—Tubular, paper, .002 mfd., 400 volts (C46)
72573	Capacitor—Tubular, paper, .003 mfd., 400 volts (C28, C47)
71926	Capacitor—Tubular, paper, .005 mfd., 200 volts (C20, C27, C32)
71553	Capacitor—Tubular, paper, .005 mfd., 400 volts (C14, C16, C17, C21, C22)
70608	Capacitor—Tubular, paper, .007 mfd., 400 volts (C49)
71923	Capacitor—Tubular, paper, .01 mfd., 200 volts (C23, C25)
71925	Capacitor—Tubular, paper, .01 mfd., 400 volts (C29, C41)
72120	Capacitor—Tubular, paper, .015 mfd., 200 volts (C48)
71928	Capacitor—Tubular, paper, .02 mfd., 200 volts (C50)
72596	Capacitor—Tubular, paper, .05 mfd., 200 volts (C15)
70617	Capacitor—Tubular, paper, 0.1 mfd., 400 volts (C37)
73744	Coil—Oscillator coil—A. M. (L4)
71942	Coil—Filament choke coil (L6)
73918	Coil—Antenna coil—F. M. (L1)
73916	Coil—Oscillator coil—F. M. (L2)
30868	Connector—2 contact female connector for motor cable
70342	Control—Volume control and power switch (B14, S3)
72953	Cord—Drive cord (approx. 48" overall)
74839	Fastener—Push fastener to mount R. F. shelf (4 required)
16058	Grommet—Rubber grommet to mount R. F. shelf (4 required)
73895	Indicator—Station selector indicator
11765	Lamp—Dial lamp—Mazda 51
74297	Plate—Dial back plate complete with 2 pulleys less dial
33514	Receptacle—Phono input socket—dual
52436	Resistor—Wire wound, 1500 ohms, 4 watts (R22)
	Resistor—Fixed, composition:—
	68 ohms, ±10%, ½ watt (R7)
	100 ohms, ±10%, ½ watt (R17, R27)
	120 ohms, ±10%, ½ watt (R12)
	330 ohms, ±10%, 1 watt (R21)
	560 ohms, ±10%, ½ watt (R33)
	680 ohms, ±20%, ½ watt (R9, R11)
	1200 ohms, ±5%, ½ watt (R23)
	3300 ohms, ±5%, ½ watt (R24)
	6800 ohms, ±10%, ½ watt (R37)
	10,000 ohms, ±10%, ½ watt (R32)
	15,000 ohms, ±10%, ½ watt (R13, R18)
	18,000 ohms, ±10%, ½ watt (R4)
	18,000 ohms, ±10%, 1 watt (R5)
	22,000 ohms, ±10%, ½ watt (R8)
	27,000 ohms, ±10%, ½ watt (R6, R30)
	33,000 ohms, ±10%, ½ watt (R36)
	39,000 ohms, ±10%, ½ watt (R25)
	56,000 ohms, ±10%, ½ watt (R31)
	56,000 ohms, ±10%, 1 watt (R10)
	100,000 ohms, ±10%, ½ watt (R35)
	270,000 ohms, ±10%, ½ watt (R19, R29)
	470,000 ohms, ±10%, ½ watt (R20, R26)
	1 megohm, ±10%, ½ watt (R34)
	2.2 megohms, ±20%, ½ watt (R3)
	3.9 megohms, ±10%, ½ watt (R2)
	10 megohms, ±20%, ½ watt (R15)
	22 megohms, ±20%, ½ watt (R16)
73894	Shaft—Tuning shaft
72516	Socket—Tube socket, 7 contact, miniature, for V4 and V5
73606	Socket—Tube socket, 7 contact, miniature, for V1, V2, and V3
31251	Socket—Tube socket, octal, wafer, for V6 and V7
31364	Socket—Lamp socket
74038	Spring—Drive cord tension spring
74202	Support—Polystyrene coil support complete with bracket
73891	Switch—Tone control switch (S4)
74913	Switch—Selector switch (S1)
73415	Transformer—Output transformer (T5)
73743	Transformer—Ratio detector transformer (T4)
70127	Transformer—Power transformer 117v/60c (T1)
73745	Transformer—First I. F. transformer—dual (T2)
74019	Transformer—Second I. F. transformer—dual (T3)
33726	Washer—"C" washer for tuning shaft
73333	Washer—Insulating washer (extruded) for mounting output transformer (2 required)
73332	Washer—Insulating washer (flat) for mounting output transformer (2 required)
	SPEAKER ASSEMBLY 92569-9 RMA 274 RL 111—14
13867	Cap—Dust cap
74901	Cone and voice coil assembly
74974	Speaker—12" P. M. speaker (3.16 oz.) complete with cone and voice coil (3.2 ohms)
	NOTE: If stamping on speaker does not agree with above number, order replacement parts by referring to model number of instrument, number stamped on speaker and full description of part required.
	MISCELLANEOUS
72555	Antenna—F. M. antenna
74205	Bezel—Dial scale bezel less dial
74579	Bumper—Rubber bumper (black) for RP168 changer drawer (2 required) for mahogany or walnut instruments
74580	Bumper—Rubber bumper (white) for RP168 changer drawer (2 required) for oak instruments
71599	Bracket—Pilot lamp bracket
72437	Cable—Shielded pickup cable for RP168 changer
74296	Cable—Shielded pickup cable for RP 178 changer
13103	Cap—Pilot lamp cap
72120	Capacitor—Tubular, paper, .015 mfd., 200 volts for RP 178 changer
71892	Catch—Bullet catch and strike for doors
74298	Clamp—Dial clamp
X3046	Cloth—Grille cloth for mahogany or walnut instruments
X3047	Cloth—Grille cloth for oak instruments
30868	Connector—2 contact female connector for motor cable (RP 178 changer)
30870	Connector—2 contact male connector for motor cable (RP 178 changer)
74581	Cover—Mountng screw cover for RP168 changer (3 required)
74273	Decal—Trade mark decal (Victrola)
71768	Decal—Trade mark decal (RCA Victor)
74915	Decal—Control function decal for mahogany or walnut instruments
74916	Decal—Control function decal for oak instruments
74203	Dial—Glass dial scale
74836	Grommet—Power and strain relief
72856	Grommet—Rubber grommet for mounting RP 178 changer (3 required)
74308	Hinge—Cabinet door hinge (1 set)
74931	Knob—Volume control or tuning control—knob—maroon—for walnut or mahogany instruments
74934	Knob—Tune control switch or selector switch—knob—maroon—for walnut or mahogany instruments
72824	Knob—Control knob—brown—for oak instruments
73896	Loop—Antenna loop complete
74730	Nail—Decorative nail for grille
74208	Nut—Tee nut for mounting RP 168 changer (3 required)
73109	Nut—Tee nut for mounting RP 178 changer (3 required)
74914	Pull—Door pull
	Resistor—Fixed, composition:—
	4700 ohms, ±10%, ½ watt for RP 178 changer
	150,000 ohms, ±10%, ½ watt for RP 178 changer
74582	Screw—#8-32 x 1¾" special screw for mounting RP 168 changer (3 required)
73110	Screw—¼-20 x 1¾" fillister head screw for mounting RP 178 changer (3 required)
74835	Slide—Slide mechanism for RP 168 changer
74736	Slide—Slide mechanism for RP 178 changer
74421	Spring—Conical spring for mounting RP 168 changer (upper—R. H.)
74422	Spring—Conical spring for mounting RP 168 changer (upper—L. H.) (2 required)
30900	Spring—Retaining spring for knobs
74423	Spring—Conical spring for mounting RP 168 changer (lower) (3 required)
72936	Stop—Door stop

© John F. Rider

Compliments of www.nucow.com

MODEL A-82,
Ch. RC-1094

PH570

Tuning Range ..... 540-1600 kc
Intermediate Frequency ..... 455 kc
Tube Complement
1. RCA-6BA6 ..... R.F. Amplifier
2. RCA-6BE6 ..... Converter
3. RCA-6BA6 ..... I.F. Amplifier
4. RCA-6AV6 ..... Det.—1st Audio—A.V.C.
5. RCA-6C4 ..... Phase inverter
6. RCA-6V6GT ..... Output
7. RCA-6V6GT ..... Output
8. RCA-5Y3GT ..... Rectifier

Dial Lamps (2) ..... Type No. 51, 6-8 volts, 0.2 amps.
Jewel Lamp ..... Type No. 51, 6-8 volts, 0.2 amps.
Tuning Drive Ratio ..... 9:1 (4½ turns of knob)
Power Supply Rating ..... 115 volts, 60 cycles, 105 watts
Loudspeaker (92569-9)
Size and type ..... 12 in. P.M.
Voice coil impedance ..... 3.2 ohms at 400 cycles
Power Output
Undistorted ..... 9.5 watts
Power Output
Maximum ..... 10.5 watts
Cabinet Dimensions
Height 32⅛ in. Width 30¼ in. Depth 19¼ in.
Record Changer
(RP168) or (RP190-2)
Turntable Speed ..... 45 r.p.m.
Record Capacity ... up to 10 RCA 7-in. fine groove records
Pickup ..... Crystal (medium output)
Record Changer (960282-4) or (960282-5)
Turntable Speed ..... 78/33⅓ r.p.m.
Record Capacity ..... Twelve 10-in. or Ten 12-in.
Pickup ..... Crystal

For record changer information refer to the following RCA Service Data.
RP168 Series 4th edition first printing
RP190 Series 1st edition first printing
960282 Second edition first printing

Either roll-out is limited in travel by a stop pin at the back end of each slide. To remove roll-out carriage first remove the retaining spring and then the stop pins. Removing the connecting cable permits the roll-out to slide out from the front of the cabinet.

Misalignment of the ball bearings in the carriage slides may cause the roll-out to have excessive drag. If this condition should exist exert a slight additional force in sliding the roll-out to its limit. This should automatically correct the condition.

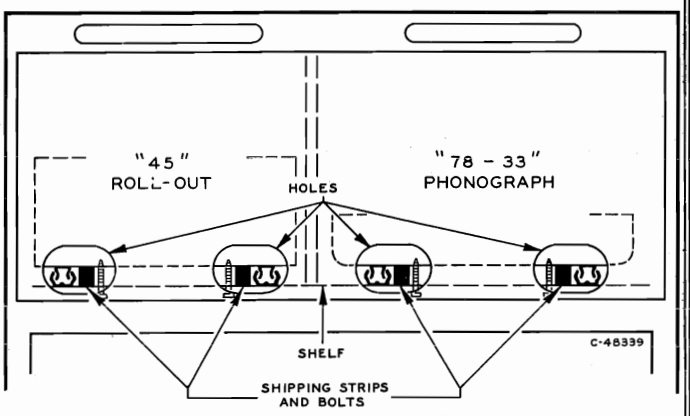

Fig. 1—Rear View of Cabinet

Before attempting to operate mechanism remove shipping bolts and strips. Slide shipping strips out through the elongated holes which have been cut in the cabinet back cover.

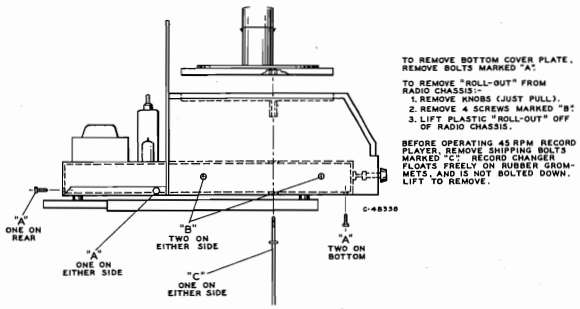

Fig. 2—Roll-out Assembly

Note: It is not necessary to remove the "roll-out" from the radio chassis when aligning the set. Having the "roll-out" fast to the chassis keeps the dial scale in place for dial calibration reference. Simply remove bottom cover as shown in Figure 2.

©John F. Rider

Compliments of www.nucow.com

MODEL A-82,
Ch. RC-1094

CRITICAL LEAD DRESS

1. Dress all A.C. leads at function switch away from audio terminals.
2. Dress phono and A.M. audio leads to function switch away from A.C. leads.
3. Dress all A.C. leads at volume control away from audio leads.
4. Dress R16 down next to chassis.
5. Dress R14 away from A.C. terminals on V.C.
6. Dress lead from top of V.C. to S1 front, terminal 7 down to chassis along front apron.
7. Dress C17 down to chassis and away from components to Pin 1 of V4.

Socket Voltages

Voltages measured with Chanalyst or VoltOhmyst and should hold within ±20% with rated line voltage. Tuning condenser closed—no signal input Volume Control Min.

Tube	Terminal		Voltage Phono	Voltage A.M.
V1 6BA6 R.F. Amp.	Plate	5	—	212
	Screen	6	—	100
	Cathode	7	—	1.23
	Grid	1	—	-.28
V2 6BE6 Converter	Plate	5	—	238
	Screen	6	—	88
	Grid	7	—	-.25
	Cathode	2	—	-7.2
V3 6BA6 I.F. Amp.	Plate	5	—	238
	Screen	6	—	125
	Cathode	7	—	4.2
	Grid	1	—	-.28
V4 6AV6 Det. A.F. Amp.	Plate	7	105	96
	Grid	1	-.9	-.93
V5 6C4 Inverter	Plate	1-5	122	99
	Grid	6	-18.9	-18.5
	Cathode	7	-12.2	-13
V6 6V6GT Output	Plate	3	299	305
	Screen	4	292	238
	Grid	5	-18.9	-18.5
	Cathode	8	-18.9	-18.4
V7 6V6GT Output	Plate	3	299	305
	Screen	4	292	238
	Grid	5	-18.9	-18.5
	Cathode	8	-18.9	-18.4
V8 5Y3GT Rectifier	Cathode	8	309	310
Total Current V8			69 ma.	66 ma.

Alignment Procedure

Output Meter Alignment.—If this method is used, connect the meter across the voice coil and turn the receiver volume control to maximum.

Signal Generator.—For all alignment operations, connect the low side of the signal generator to the receiver chassis and keep the output as low as possible to avoid AVC action.

Dial Pointer Adjustment.—Rotate tuning condenser until the plates are fully closed. Adjust indicator pointer to the score mark at the left hand end of the dial.

Steps	Connect the high side of the test oscillator to—	Tune test-osc. to—	Turn radio dial to—	Adjust the following for maximum output
1	Converter grid in series with a .01 mfd. cap. to Pin #7 of V2	455 kc	Min. cap.	Top and bottom of T1 and T2
2	Short piece of wire placed near loop for radiated signal	1620 kc	1620 kc	OSC-C1-2T
3		1400 kc	1400 kc	RF C1-1T ANT C1-3T
4		600 kc	600 kc	OSC coil L3 RF coil L2 Adj. simultaneously while rocking gang
5		Repeat steps 2, 3 and 4 for greatest sensitivity		

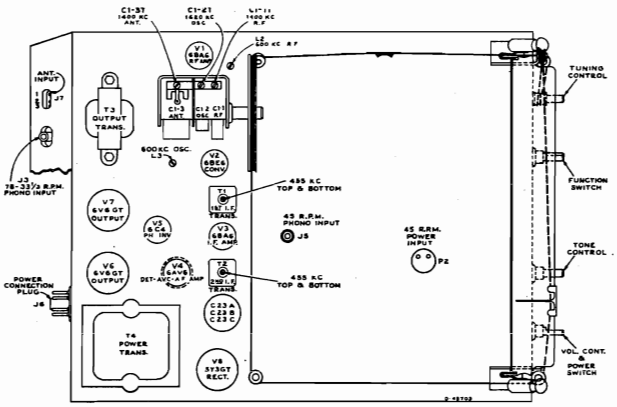

Fig. 3—Chassis Top View

REPLACEMENT PARTS

STOCK No.	DESCRIPTION
	Chassis Assemblies RC 1094
75541	Bracket—Pulley bracket complete with drive cord pulley
75595	Capacitor—Variable tuning capacitor, complete with drive drum (C1-1, C1-2, C1-3)
39042	Capacitor—Ceramic, 47 mmf. (C6)
71924	Capacitor—Ceramic, 56 mmf. (C8)
39632	Capacitor—Mica, 150 mmf. (C2, C7, C16, C20)
73801	Capacitor—Tubular, paper, .001 mfd., 400 volts (C5)
71394	Capacitor—Tubular, paper, .0015 mfd., 600 volts (C10)
73851	Capacitor—Tubular, paper, oil impregnated, .0018 mfd., 1600 volts (C24)
73803	Capacitor—Tubular, paper, .002 mfd., 1000 volts (C21, C22)
70603	Capacitor—Tubular, paper, .003 mfd., 400 volts (C17)
73920	Capacitor—Tubular, paper, .005 mfd., 400 volts (C3, C15)
73561	Capacitor—Tubular, paper, .01 mfd., 400 volts (C4, C9, C13, C18)
73797	Capacitor—Tubular, paper, .015 mfd., 400 volts (C11)
58476	Capacitor—Tubular, paper, oil impregnated, .018 mfd., 400 volts (C12)
73562	Capacitor—Tubular, paper, .02 mfd., 400 volts (C19)

©John F. Rider

Compliments of www.nucow.com

MODEL A-82,
Ch. RC-1094

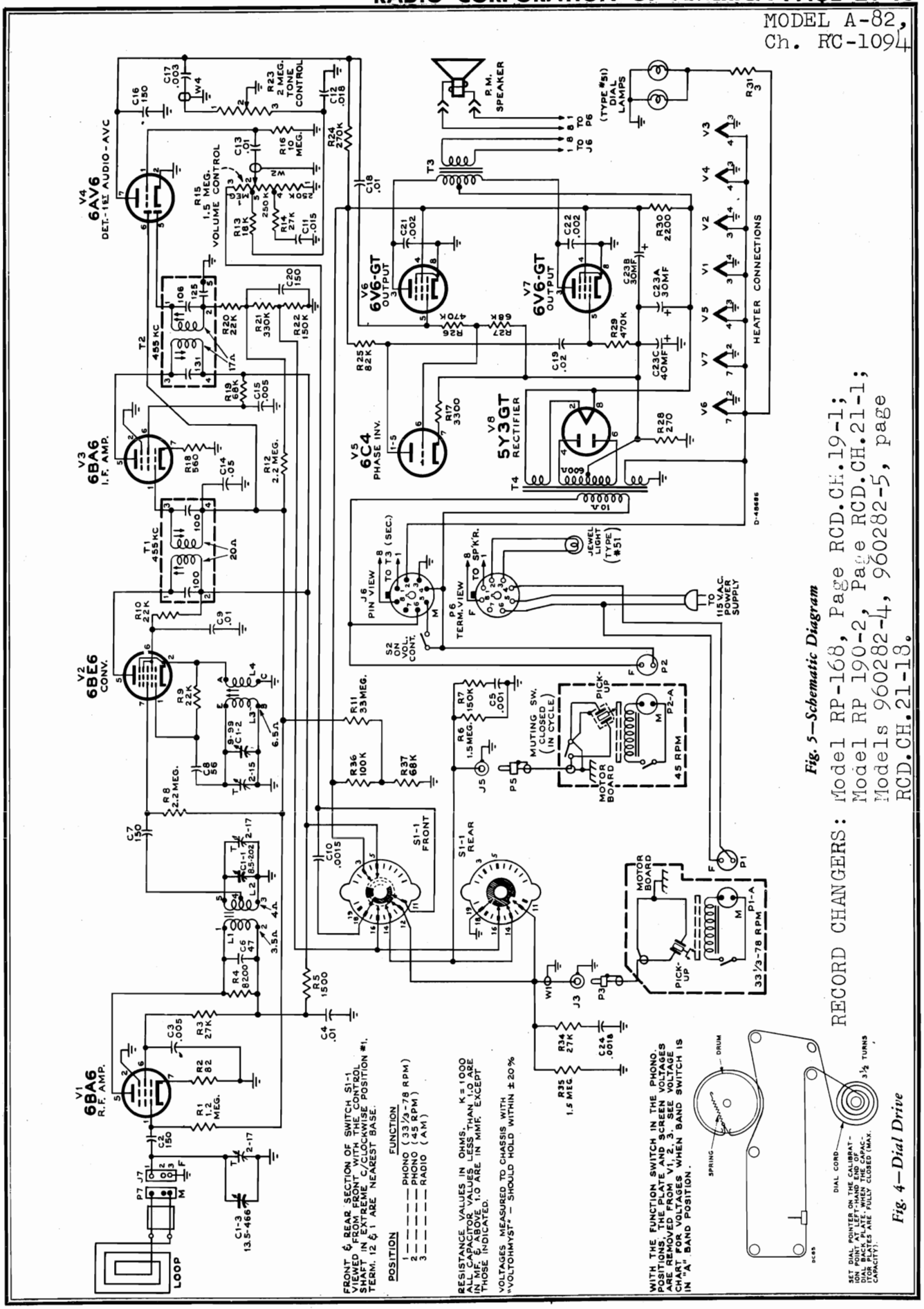

FRONT & REAR SECTION OF SWITCH S1-1 VIEWED FROM FRONT WITH THE CONTROL SHAFT IN EXTREME C/CLOCKWISE POSITION #1. TERM. 12 & 1 ARE NEAREST BASE.

POSITION	FUNCTION
1	PHONO (33 1/3-78 RPM)
2	PHONO (45 RPM)
3	RADIO (AM)

RESISTANCE VALUES IN OHMS. K=1000 ALL CAPACITOR VALUES LESS THAN 1.0 ARE IN MF. & ABOVE 1.0 ARE IN MMF. EXCEPT THOSE INDICATED.

VOLTAGES MEASURED TO CHASSIS WITH "VOLTOHMYST" — SHOULD HOLD WITHIN ±20%

WITH THE FUNCTION SWITCH IN THE PHONO. POSITIONS, THE PLATE AND SCREEN VOLTAGES ARE REMOVED FROM V1, 2, 3. SEE VOLTAGE CHART FOR VOLTAGES WHEN BAND SWITCH IS IN "A" BAND POSITION.

Fig. 5—Schematic Diagram

RECORD CHANGERS: Model RP-168, Page RCD.CH.19-1; Model RP 190-2, Page RCD.CH.21-1; Models 960282-4, 960282-5, page RCD.CH.21-18.

SET DIAL POINTER ON THE CALIBRATION POINT AT LEFT-HAND END OF DIAL BACK PLATE WHEN THE COMPOSITE PLATES ARE FULLY CLOSED (MAX. CAPACITY).

Fig. 4—Dial Drive

©John F. Rider

Compliments of www.nucow.com

MODEL A-82,
Ch. RC-1094

REPLACEMENT PARTS (continued)

STOCK No.	DESCRIPTION
73553	Capacitor—Tubular, paper, .05 mfd., 400 volts (C14)
72052	Capacitor—Electrolytic comprising 1 section of 30 mfd., 450 volts, 1 section of 30 mfd., 350 volts and 1 section of 40 mfd., 25 volts (C23A, C23B, C23C)
73935	Clip—Mounting clip for i-f transformer
75627	Clip—Clip for main cable—on rear of chassis
75596	Coil—R-F coil complete with adjusting screws (L1, L2)
73516	Coil—Oscillator coil complete with adjustable core (L3, L4)
35787	Connector—Single contact female connector for 33⅓/78 RPM changer input (J5)
75542	Connector—8 contact male connector for power input cable (J6)
75543	Connector—2 contact female connector for 45 RPM motor cable (P2)
74879	Connector—2 contact (polarized) female connector for antenna leads (J7)
33742	Connector—Single contact female connector for 45 RPM changer input (J3)
75537	Control—Volume control and power switch (R15, S2)
75538	Control—Tone control (R23)
†72953	Cord—Drive cord (approx. 60" over-all length required)
75547	Grommet—Rubber grommet to mount slides to bottom—rear (2 req'd)
75548	Grommet—Rubber grommet to mount slides to bottom—front (2 req'd)
11765	Lamp—Dial lamp—Mazda #51
75544	Nut—Rivnut to fasten screw for mounting chassis (4 req'd)
75535	Plate—Dial back plate complete with three (3) pulleys
18469	Plate—Bakelite mounting plate for electrolytic capacitor
75536	Pointer—Station selector pointer
72602	Pulley—Drive cord pulley
72323	Resistor—Wire wound, 3 ohms, ½ watt (R31)
73637	Resistor—Wire wound, 2200 ohms, 5 watts (R30)
	Resistor—Fixed, composition:—
	82 ohms, ±10%, ½ watt (R2)
	270 ohms, ±10%, 2 watts (R28)
	560 ohms, ±10%, ½ watt (R18)
	1500 ohms, ±20%, ½ watt (R5)
	3300 ohms, ±5%, ½ watt (R17)
	8200 ohms, ±10%, ½ watt (R4)
	18,000 ohms, ±10%, ½ watt (R13)
	22,000 ohms, ±10%, ½ watt (R9, R20)
	22,000 ohms, ±10%, 2 watts (R10)
	27,000 ohms, ±10%, ½ watt (R14, R34)
	27,000 ohms, ±10%, 1 watt (R3)
	68,000 ohms, ±10%, ½ watt (R19, R27, R37)
	82,000 ohms, ±10%, ½ watt (R25)
	100,000 ohms, ±10%, ½ watt (R36)
	150,000 ohms, ±10%, ½ watt (R7, R22)
	270,000 ohms, ±10%, ½ watt (R24)
	330,000 ohms, ±10%, ½ watt (R21)
	470,000 ohms, ±10%, ½ watt (R26, R29)
	1.5 megohm, ±10%, ½ watt (R6, R35)
	2.2 megohm, ±20%, ½ watt (R1, R8, R12)
	10 megohm, ±20%, ½ watt (R16)
	33 megohm, ±20%, ½ watt (R11)
75540	Shaft—Tuning knob shaft
73584	Shield—Tube shield
75546	Slide—Slide mechanism complete for radio chassis bottom
31251	Socket—Tube socket, octal, wafer
73117	Socket—Tube socket, 7 pin, miniature
31364	Socket—Dial lamp socket
74038	Spring—Drive cord spring
75597	Switch—Function switch (S1-1)
75486	Transformer—First I-F transformer complete with adjustable cores (T1)
75487	Transformer—Second I-F transformer complete with adjustable cores (T2)
73636	Transformer—Output transformer (T3)
75566	Transformer—Power transformer 117 volts, 60 cycle (T4)
33726	Washer—"C" washer for tuning knob shaft
	RADIO ROLLOUT CARRIAGE
75598	Decal—Function decal for controls
75550	Dial—Polystyrene dial scale
75549	Frame—Moulded frame (maroon) for mounting radio chassis and 45 RPM changer for mahogany and walnut instruments
75683	Frame—Moulded frame (light brown) for mounting radio chassis and 45 RPM changer for oak instruments
75551	Handle—Metal pullout handle for mounting frame
75555	Screw—#8-32 x ⅝" cross recessed pan head machine screw to mount radio chassis (4 req'd)
	SPEAKER ASSEMBLY 92569-9 RMA 274 RL 111—14
13867	Cap—Dust cap
74901	Cone—Cone and voice coil assembly
74974	Speaker—12" P.M. speaker complete with cone and voice coil (3.2 ohms) NOTE: If stamping on speaker does not agree with above number, order replacement parts by referring to model number of instrument, number stamped on speaker and full description of part required.
	MISCELLANEOUS
75706	Antenna—Antenna loop complete less cable
75898	Back—Back cover—maroon—for 33⅓/78 RPM changer compartment for mahogany or walnut instruments (assembled to rollout)
75899	Back—Back cover—light brown—for 33⅓/78 RPM changer compartment for oak instruments (assembled to rollout)
75900	Back—Back cover—maroon—for radio—45 RPM changer compartment for mahogany or walnut instruments (assembled to rollout)
75901	Back—Back cover—light brown—for radio—45 RPM changer compartment for oak instruments (assembled to rollout)
75694	Bracket—Stop bracket less rubber bumper for rollout compartments
71599	Bracket—Pilot lamp bracket
75696	Bumper—Rubber bumper for rollout compartment stop bracket
74296	Cable—Shielded pickup cable complete with pin plug for 33⅓/78 RPM changer (P3)
72437	Cable—Shielded pickup cable complete with pin plug for instruments using RP190-2 changer
13103	Cap—Pilot lamp cap
71892	Catch—Bullet catch and strike for cabinet doors
X3144	Cloth—Grille cloth for mahogany or walnut instruments
X3093	Cloth—Grille cloth for oak instruments
74882	Connector—2 contact (polarized) male connector for antenna loop cable (P7)
75709	Connector—8 contact female connector for main cable less shell (P6)
30868	Connector—2 contact female connector for 33⅓/78 RPM changer motor cable (P1)
75474	Connector—Single contact male connector for speaker (2 req'd)
30870	Connector—2 contact male connector for motor leads for instruments using RP190-2 changer
71984	Decal—Trade mark decal (RCA Victor)
74273	Decal—Trade mark decal (Victrola)
74838	Grommet—Power cord strain relief (1 set)
37396	Grommet—Rubber grommet for speaker mounting
75697	Grommet—Rubber grommet to mount 45 RPM changer
75551	Handle—Metal pullout handle for 33⅓/78 RPM changer compartment
74308	Hinge—Cabinet door hinge (1 set)
75712	Knob—Tuning control, tone control or volume control and power switch knob—maroon—for mahogany or walnut instruments
75713	Knob—Tuning control, tone control or volume control and power switch knob—tan—for oak instruments
75714	Knob—Function switch knob—maroon—for mahogany or walnut instruments
75715	Knob—Function switch knob—tan—for oak instruments
11765	Lamp—Pilot lamp—Mazda #51
73634	Nut—Speed nut for speaker mounting screws
74276	Pull—Door pull
75907	Screw—#10-32 x 5¼" cross recessed round head (special shipping screws) screw to mount 45 RPM changer
74113	Screw—#8-32 x 1" trimit head screw for door pull
75708	Shell—Shell for 8 contact female connector
75546	Slide—Slide mechanism complete for 33⅓/78 RPM changer mounting frame
31364	Socket—Pilot lamp socket and load
74734	Spring—Retaining spring for knobs
75902	Spring—Suspension spring for main cable
72936	Stop—Cabinet door stop

†Stock No. 72953 is a reel containing 250 feet of cord.

©John F. Rider

Compliments of www.nucow.com

MODEL A106,
Ch. RC-622

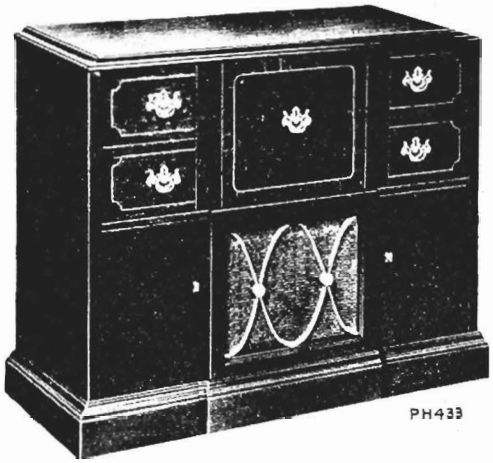

Antennas

This receiver has built-in antenna for standard broadcast (AM) and frequency modulation (FM) reception.

Provision is made for the use of an external antenna for FM reception if desired. To use external FM antenna — remove the built-in FM antenna lead from the "FM" terminals of the antenna terminal board. Connect the transmission line of an external FM dipole antenna to these two "FM" terminals.

FOR RECORD CHANGER SERVICE INFORMATION REFER TO RP-168 SERIES SERVICE DATA FOR 45 R.P.M. AND MODEL 960285-1 SERVICE DATA for 78/33⅓ R.P.M.

Tuning Range

Standard Broadcast (AM) ..... 540-1,600 kc.
Frequency Modulation (FM) ..... 88-108 mc.
Intermediate Frequencies ..... AM—455 kc., FM—10.7 mc.

Tube Complement

(1) RCA 6BJ6 ..... R-F Amplifier
(2) RCA 6J6 ..... Mixer and Oscillator
(3) RCA 6BA6 ..... I-F Amplifier
(4) RCA 6AU6 ..... Driver
(5) RCA 6AL5 ..... Ratio Detector
(6) RCA 6AV6 ..... AM Det.—AVC—A-F Amplifier
(7) RCA 6AV6 ..... Ph. Inv.
(8) RCA 6V6GT ..... Output
(9) RCA 6V6GT ..... Output
(10) RCA 6X5GT ..... Rectifier

Dial Lamps (2) ..... Type No. 51, 6-8 volts, 0.2 amp.
Jewel Lamp ..... Type No. 51, 6-8 volts, 0.2 amp.

Tuning Drive Ratio ..... 18:1 (9 turns of knob)

Power Supply Rating ..... 115 volts, 60 cycles, 90 watts

Loudspeaker (92569-6W)

Size and type ..... 12 in. PM
Voice coil impedance ..... 3.2 ohms at 400 cycles

Power Output

(Radio) Undistorted 5 watts ..... Maximum 6.4 watts
(Phono.) Undistorted 8 watts ..... Maximum 9 watts

Cabinet Dimensions

Height 31½ in. **Width 39¾ in.** **Depth 17½ in.**

Record Changer (RP-168)

Turntable speed ..... 45 r.p.m.
Record capacity ..... Up to 10 RCA 7-in. fine groove records
Pickup ..... Crystal (medium output)

Record Changer (960285-1)

Turntable speed ..... 78/33⅓ r.p.m.
Record capacity ..... Twelve 10-in., ten 12-in. or ten intermix
Pickup ..... Crystal

Circuit Description

This instrument has a ten-tube (including rectifier) chassis which is very similar to those used in other RCA Victor radio-phonograph combinations designed for AM-FM reception.

The selector switch has five functions:

(1) Selection of tuning range.

(2) Selection and distribution of a.v.c. voltages.

(3) Application of B+ voltage to tubes V1, V2, V3 and V4.

(4) Selection of audio input applied to the volume control.

(5) Application of a.c. power to the record changer motors.

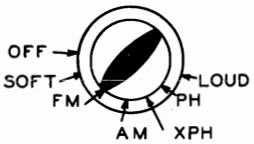

POWER-VOLUME SELECTOR

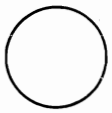

TUNING

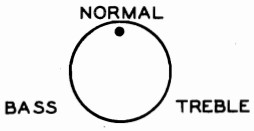

TONE

MS-836

Operating Controls

CRITICAL LEAD DRESS

Note: The leads listed may not be critical in all receivers. However, by dressing the leads as specified, unusual difficulties will be minimized.

1. The plate lead of the **second** IF transformer should be dressed down against the chassis to obtain max. capacity between the lead and chassis. This lead is specified to be two inches long.

RECORD CHANGERS: For Model RP-168, See Pages RCD.CH.19-1 to RCD.CH.19-8. For Model 960285-1, See Pages RCD.CH.21-50 to RCD.CH.21-64.

©John F. Rider

Compliments of www.nucow.com

2. The "A" band RF transformer plate, and grid leads should be dressed so as to minimize coupling to the RF amplifier grid circuit, and kept close to chassis when possible.
3. The 2.2 meg. grid resistors connecting to the RF and mixer grids should have a minimum practicable amount of lead extending on the grid end. The leads should be cut off short on the grid end and long on the A.V.C. end.
4. The unshielded plate lead from the function switch to the 1st IF transformer should be dressed away from the switch wafer audio lugs as much as possible.
5. The ground strap between the RF shelf and chassis should be well soldered and kept as short as practicable. FM instability may be caused by having this ground strap too long, particularly when no input is connected to the FM antenna terminal.
6. The lead from the 2nd IF to the grid of the 6BA6 1st IF amplifier should be kept short, and dressed against the chassis as much as practicable.
7. The lead from the 2nd IF to the AM detector diode should be dressed to minimize coupling to the 6AV6 1st AF grid and kept close to chassis.
8. Leads from the volume control taps should be kept clear of all filament and output plate wires as in the wiring sample.
9. The loop cable when connected to the AM sec. gang stator should be dressed to have minimum capacity coupling to the stator lug on the RF section of gang condenser.
10. The oscillator coupling condenser C10 should be dressed to have minimum capacity to the mixer grid, Pin No. 5 on V2.
11. The shielding on the shielded lead from the volume control to the function switch should have the minimum practicable exposed wire at the function switch end.

Alignment Procedure

CORRECT ALIGNMENT OF THE FM BAND REQUIRES THAT THE AM BAND BE ALIGNED FIRST

Alignment Indicators:

An RCA VoltOhmyst or equivalent meter is necessary for measuring developed d-c voltage during FM alignment. Connections are specified in the alignment tabulation. An output meter is also necessary to indicate minimum audio output during FM Ratio Detector alignment. Connect the output meter across the speaker voice coil.

The RCA VoltOhmyst can also be used as an AM alignment indicator, either to measure audio output or to measure a-v-c voltage.

When audio output is being measured the volume control should be turned to maximum.

Signal Generator:

For all alignment operations connect the low side of the signal generator to the receiver chassis. The output should be adjusted to provide accurate resonance indication at all times. If output measurement is used for AM alignment the output of the signal generator should be kept as low as possible to avoid a-v-c action.

Oscilloscope Alignment:

The FM I-F alignment may be checked using a sweep generator and an oscilloscope. Shunt terminals B and C of T4 with a 1200 ohm resistor. Connect the high side of an oscilloscope to terminal C of T4 in series with a diode probe. Apply the output of the sweep generator (10.7 mc. with ±250 kc. sweep) to pin No. 1 of V3 (6BA6) in series with .01 mf. Low side of the oscilloscope and sweep generator to chassis. This will show the response of T3.

To check the combined response of T2 and T3: connect the sweep generator to the FM antenna terminals (remove FM antenna lead) in series with 300 ohms. **Note:** One FM terminal is grounded—it may be necessary to reverse the sweep generator connections. Oscilloscope connections remain as connected.

To check the ratio detector response: connect the high side of the oscilloscope direct to terminal No. 9 of S1, low side to chassis. Apply the output of the sweep generator to pin No. 1 of V4 (6AU6) in series with .01 mf. Driver plate circuit connected for normal operation (1200 ohm resistor removed). **Note:** It is difficult to observe marker signals in this step—center frequency and sweep width should be previously observed.

AM Alignment

RANGE SWITCH IN BC POSITION

Steps	Connect high side of sig. gen. to—	Sig. gen. output	Turn radio dial to—	Adjust for peak output
1	Pin No. 5 of V2 in series with .01 mfd.	455 kc.	Quiet point at low freq. end.	AM windings.† T3 bottom core (sec.). T3 top core (pri.).
2				AM windings.† T2 top core (sec.). T2 bottom core (pri.).
3	Short wire placed near loop for radiated signal	1400 kc.	1400 kc.	C1-2T (osc.). C1-5T (ant.). C1-4T (rf.).
4		600 kc.	600 kc.	L8 (osc.) with 10,000 ohms resistor from RF stator to gnd. (rocking gang)
5				L5 (RF) with the 10,000 ohms removed.
6	Repeat steps 3, 4 and 5 until no improvement in sensitivity is obtained.			

† Use alternate loading.

Alternate loading involves the use of a 47,000 ohm resistor to load the AM plate winding while the AM grid winding of the SAME TRANSFORMER is being peaked. Then the grid winding is loaded with the resistor while the plate winding is peaked. Only one winding is loaded at any one time. Remove the 47,000 ohm resistor after T3 and T2 have been aligned.

Oscillator frequency is above signal frequency on both AM and FM.

FM Alignment

RANGE SWITCH IN FM POSITION—VOLUME CONTROL MAXIMUM

Steps	Connect high side of sig. gen. to—	Sig. gen. output	Turn radio dial to—	Adjust for peak output
1	Connect the d-c probe of a VoltOhmyst to the negative lead of the 2 mfd. capacitor C42 and the common lead to chassis. Turn gang condenser to max. capacity (fully meshed). Volume Control max.			
2	Pin 1 of V4 6AU6 in series with 470 ohm resistor.	10.7 mc. modulated 30% 400 cycles AM (Approx. .05 volt).	Max. capacity (fully meshed).	T4 top core for max. d-c voltage across C42. T4 bottom core for min. audio output. *
3		10.7 mc. Adjust to provide about 4 volts indication on VoltOhmyst during alignment.		FM windings.†† T3 top core (sec.). T3 bottom core (pri.).
4				FM windings.†† T2 top core (sec.). T2 bottom core (pri.).
5	High and low side of signal gen. through two 120 ohm resistors. To ant. terminals.	90 mc.	90 mc.‡	L9 (osc.).**
6		106 mc.	106 mc.	C1-6T (ant.). C1-3T (rf.).
7		90 mc.	90 mc.	L1 (ant.).** L3 (rf.).**
8	Repeat steps 6 and 7 until no improvement in sensitivity is obtained.			

* Two or more points may be found which lower the audio output. At the correct point the minimum audio output is approached rapidly and is much lower than at any incorrect point.

†† Align T3 and T2 by means of alternate loading as explained under AM alignment. Use a 680 ohm resistor instead of a 47,000 ohm resistor and load the FM windings.

** L1, L3 and L9 are adjustable by increasing or decreasing the spacing between turns.

‡ After dial pointer has been set accurately on calibration point for "A" band (see dial indicator and drive drawing) tune receiver to 90 mc. on FM using dial scale as reference or use dial scale drawing

©John F. Rider

Compliments of www.nucow.com

MODEL A106,
Ch. RC-622

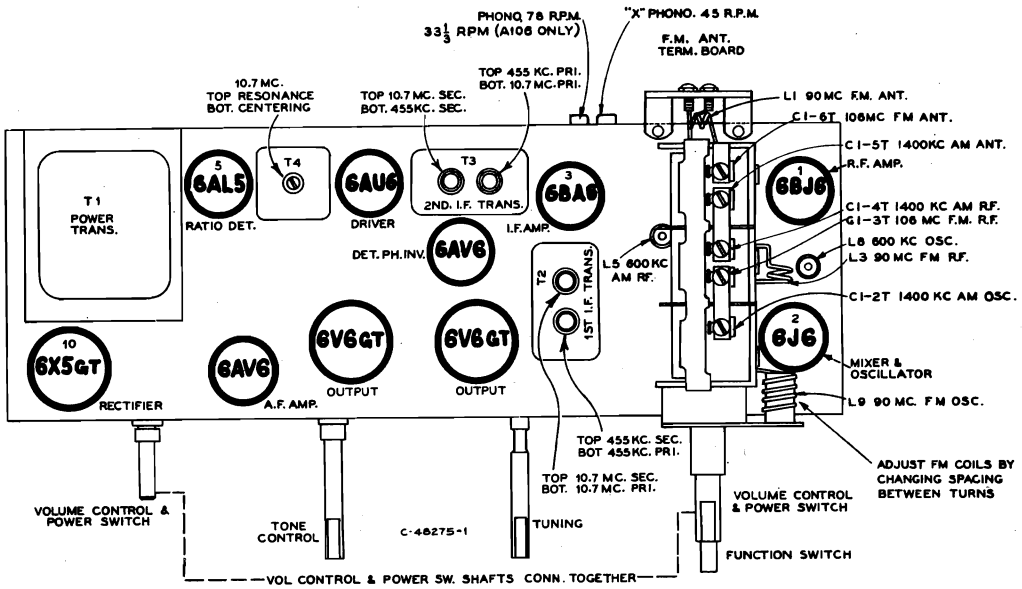

Tube and Trimmer Locations

Socket Voltages

Voltages measured with Chanalyst or VoltOhmyst and should hold within ±20% with rated line voltage. Tuning condenser closed—no signal input.

Tube	Terminal		Voltage		
			Phono	A.M.	F.M.
V1 6BJ6 R.F. Amp.	Plate	5	—	185	110
	Screen	6	—	120	100
	Cathode	2	—	0.8	0.8
	Grid	1	–0.9	–0.0	–0.6
V2 6J6 Mixer and Osc.	Plate	1	—	73	80
	Grid	6	–1.07	–2	–3.4
	Plate	2	—	56	56
	Grid	5	–0.54	–5.4	–3.6
V3 6BA6 I.F. Amp.	Plate	5	—	180	178
	Screen	6	—	115	111
	Cathode	7	—	0.9	0.9
	Grid	1	–0.95	–1.1	–.75
V4 6AU6 Driver	Plate	5	—	174	175
	Screen	6	—	125	175
	Cathode	7	—	0.9	0.9
V5 6AL5 Ratio Det.	——	—	—	—	—
V6 6AV6 A.F. Amp.	Plate	7	97	85	80
	Grid	1	–.72	–.75	–0.75
V7 6AV6 Inverter	Plate	7	140	110	110
	Grid	1	–18.7	–17.8	–17.3
	Cathode	2	–18	–17	–16.6
V8 6V6GT Output	Plate	3	262	270	270
	Screen	4	262	190	190
	Grid	5	–18	–17	–16
V9 6V6GT Output	Plate	3	262	270	270
	Screen	4	262	190	190
	Grid	5	–18	–17	–16
V10 6X5GT Rectifier	Cathode	8	271	275	275

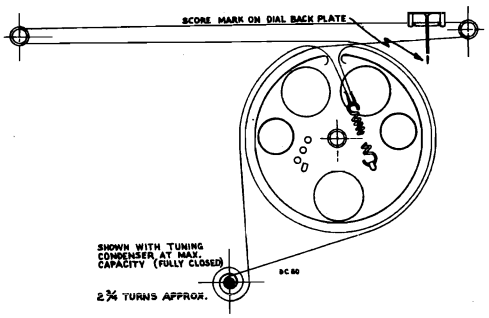

Dial Indicator and Drive Mechanism

CABLE SHOWN IN EXTREME COUNTER CLOCKWISE POSITION

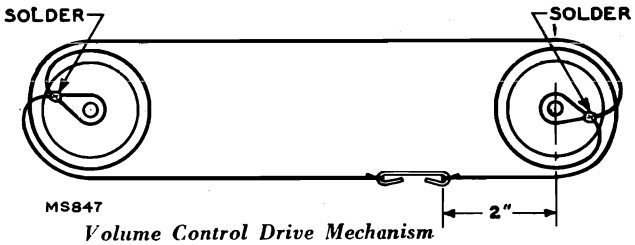

Volume Control Drive Mechanism

Cathode Currents (MA)

Tube	Terminal	Phono	A.M.	F.M.
V1 6BJ6	2	—	11.1	11.4
V2 6J6	7	—	6.8	6.6
V3 6BA6	7	—	13.1	13.7
V4 6AU6	7	—	8.2	8.1
V5 6AL5	1 & 5	—	—	—
V6 6AV6	2	0.68	.44	.43
V7 6AV6	2	1.7	1.4	1.35
V8 6V6GT	8	33	11.2	11
V9 6V6GT	8	33	11	11
V10 6X5GT	8	66	63	63

©John F. Rider

Compliments of www.nucow.com

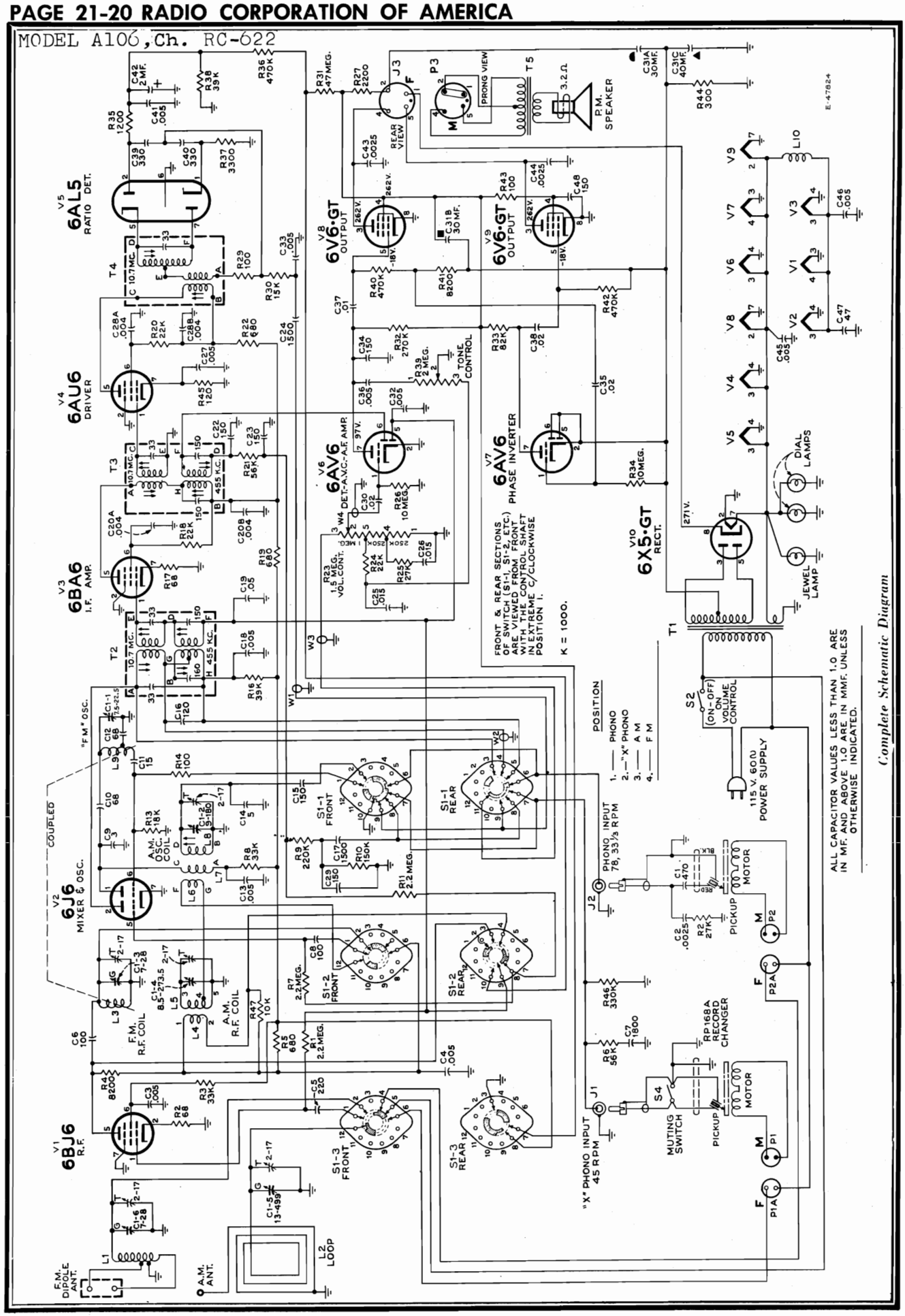

Complete Schematic Diagram

©John F. Rider

Compliments of www.nucow.com

MODEL A106,
Ch. RC-622

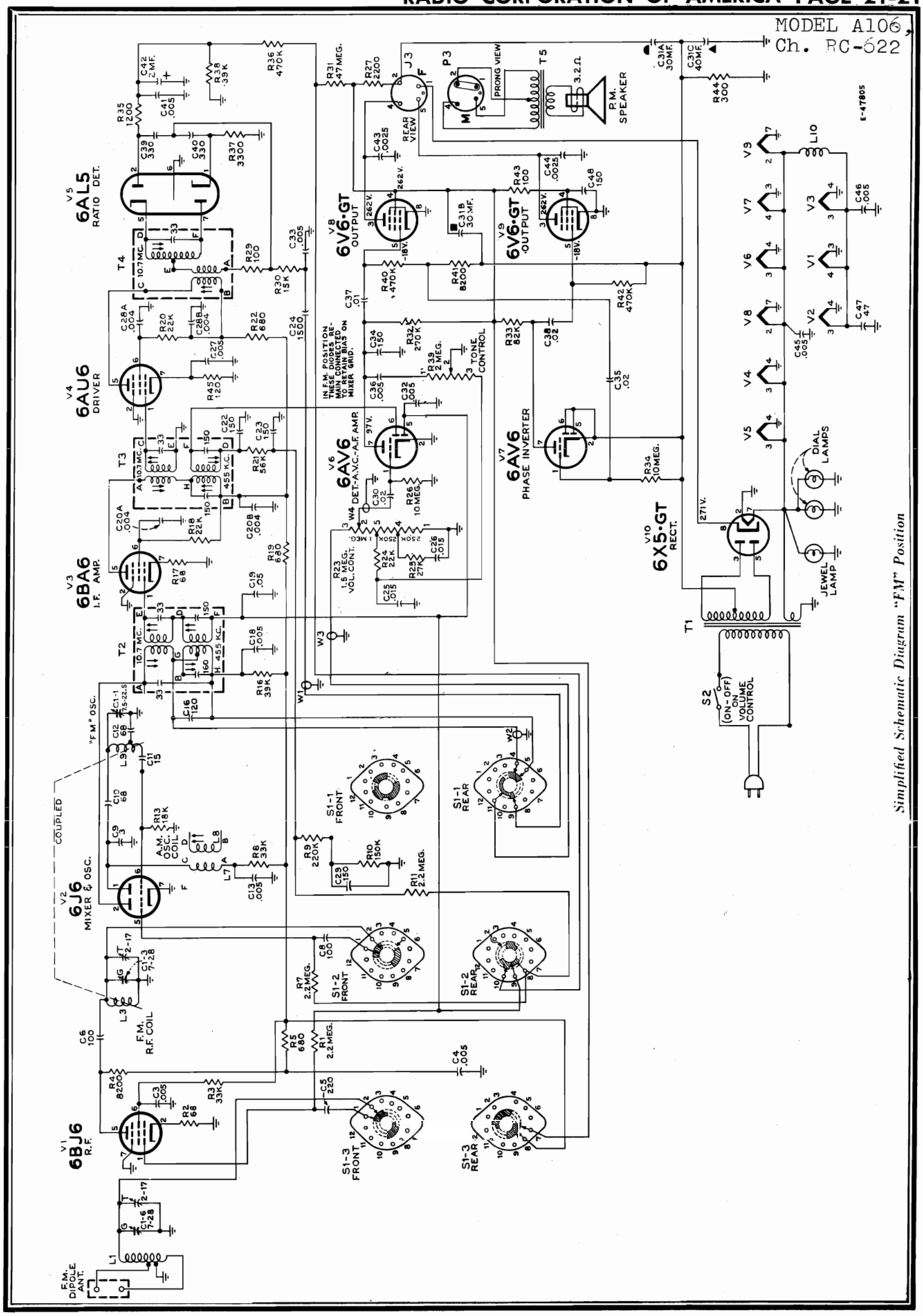

Simplified Schematic Diagram "FM" Position

©John F. Rider

Compliments of www.nucow.com

MODEL A106,
Ch. RC-622

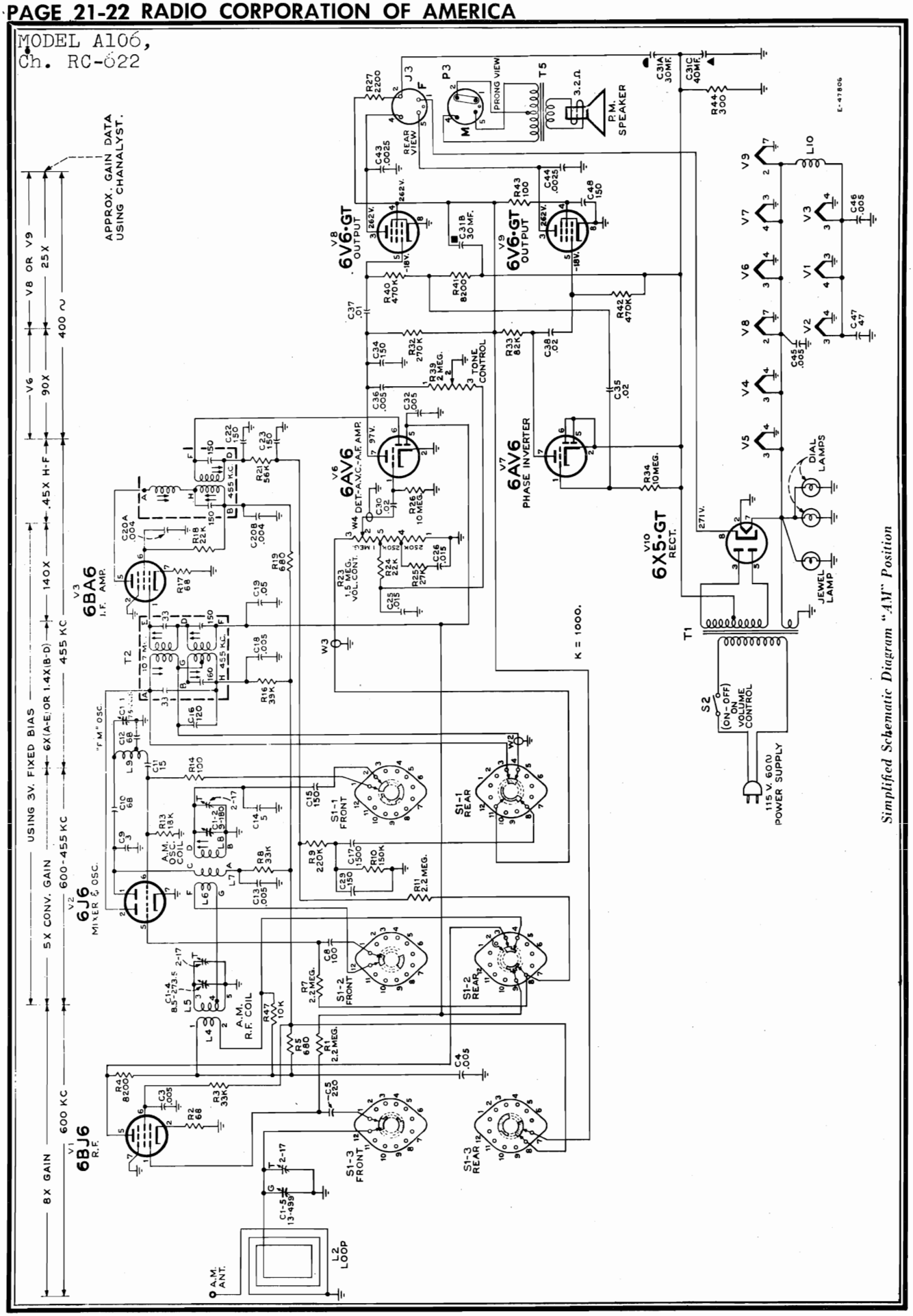

Simplified Schematic Diagram "AM" Position

©John F. Rider

Compliments of www.nucow.com

©John F. Rider

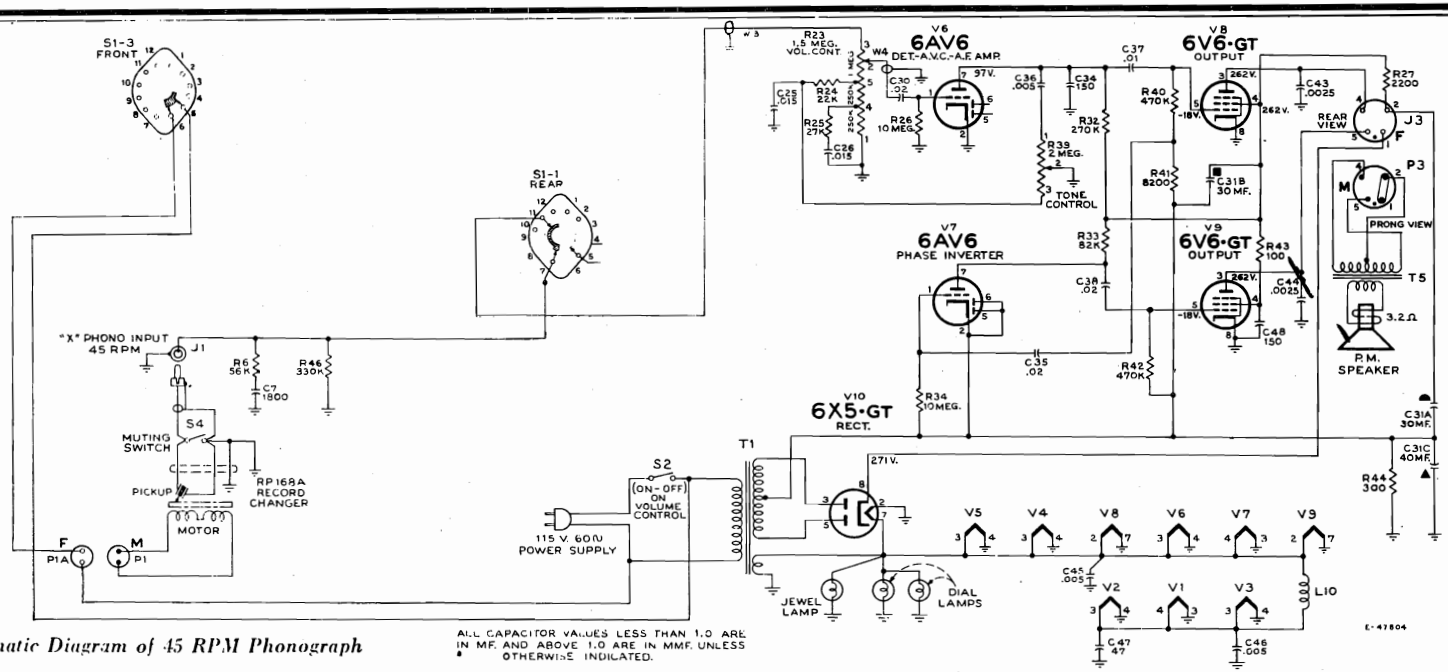

Simplified Schematic Diagram of 45 RPM Phonograph

ALL CAPACITOR VALUES LESS THAN 1.0 ARE IN MF. AND ABOVE 1.0 ARE IN MMF. UNLESS OTHERWISE INDICATED.

SHIPPING SCREWS

The radio chassis of these instruments is secured to the cabinet with shipping screws (painted red) which, together with spacing strips, should be **REMOVED** at the time of installation.

The record changers are each mounted with three screws which should be **LOOSENED** at the time of installation.

On the RP-168 record changer decorative caps cover the mounting screws. Remove the caps for access to the screws.

RP-168 RECORD CHANGER

Pickup Landing Adjustment "A"

The pickup point should land half-way between the outer edge of the record and the first music groove.

If the pickup lands inside the starting grooves—turn screw "A" slightly clockwise. If pickup lands outside the starting grooves—turn screw "A" slightly counterclockwise.

Pickup Height Adjustment "B"

During cycle the pickup arm must rise high enough to clear a stack of ten records on the turntable, but not high enough to cause the top of the arm to touch records resting on the record supports.

If pickup does not clear a stack of ten records — turn screw "B" slightly clockwise. If pickup arm touches records on record supports—turn screw "B" slightly counterclockwise.

Record Separators

During service, the position of the star wheel on the underside of the record changer may be accidentally shifted; this may cause the separator knives to be extended when they should be concealed.

If the separator knives are thus extended—turn the power on so that the turntable is revolving, push the "start-reject" knob and allow the mechanism to complete a change cycle. If the knives remain extended—while the turntable is still revolving, gently press fingers against the extended knives until they disappear inside the center post— DO THIS ONLY WHILE MECHANISM IS OUT OF CYCLE.

CARE OF SAPPHIRE

The sapphire point on the pickup is protected with a permanent metal guard. Lint may collect to clog the opening in the guard at the sapphire point and cause poor record reproduction. Occasional cleaning may be necessary; brush carefully with a small soft brush.

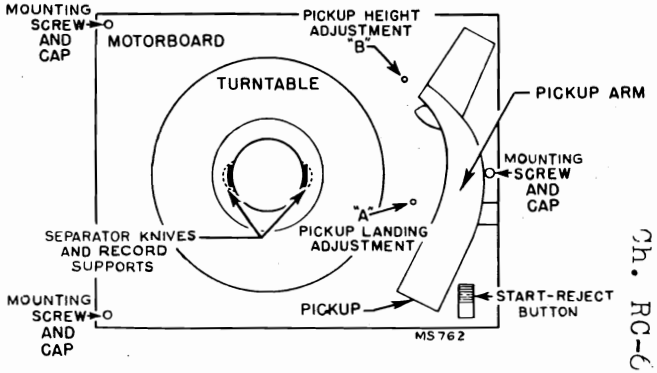

Top View—RP-168 Record Changer

MODEL A100, Ch. RC-622

Compliments of www.nucow.com

MODEL A106,
Ch. RC-622

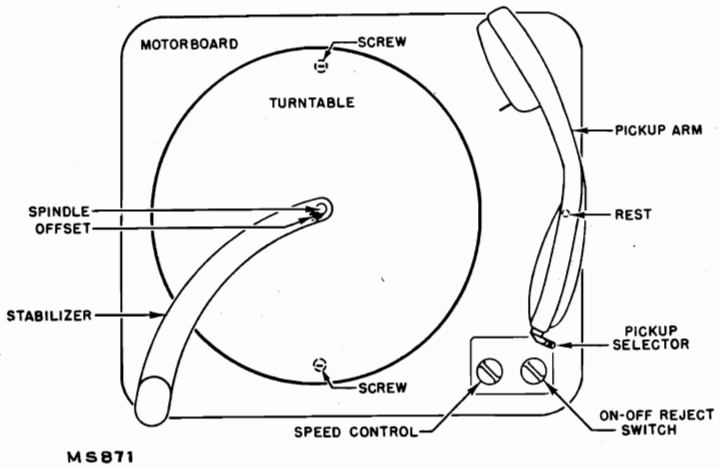

Top View—960285-1 Record Changer

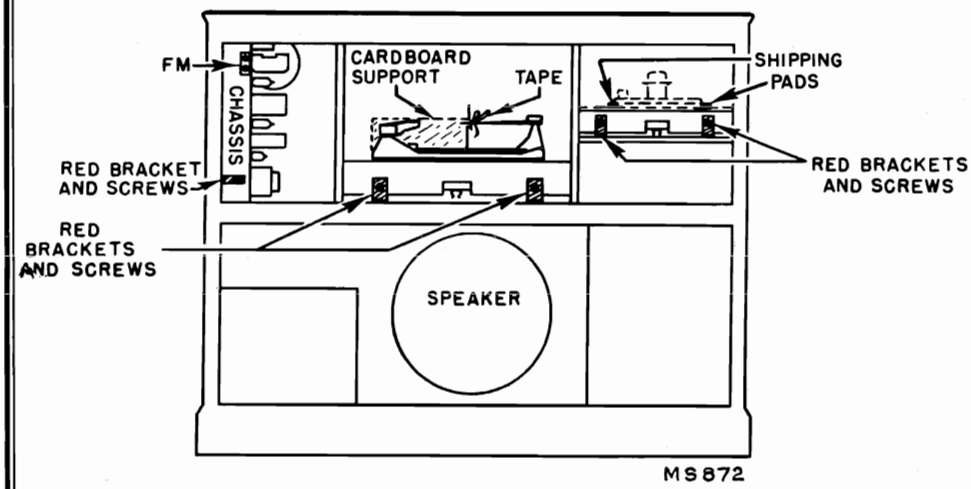

Rear View Showing Location of Various Units

NOTE: When instrument is used in steel constructed building or in very poor signal areas an outside antenna can be attached to terminal in middle of loop antenna. This applies to "A" band operation.

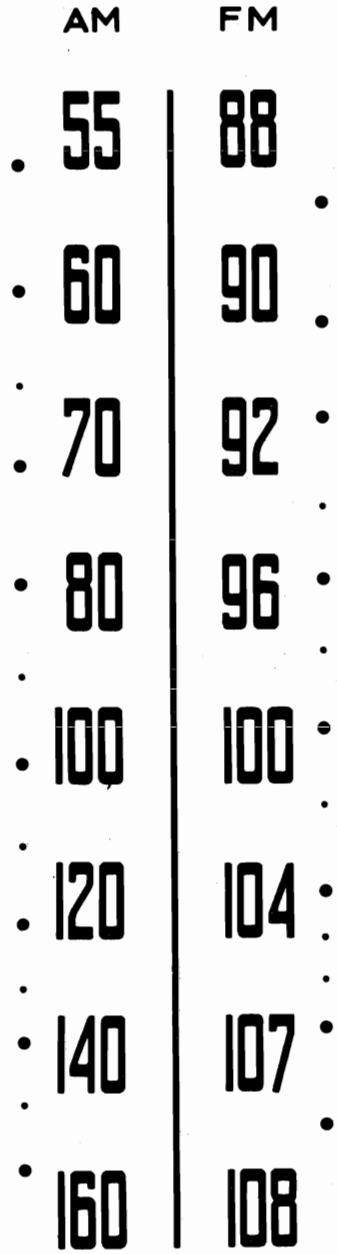

Dial Scale (Actual Size)

933773

RCA VICTOR

©John F. Rider

Compliments of www.nucow.com

MODEL A106,
Ch. RC-622

Simplified Schematic Diagram of 78, 33⅓ RPM Phonograph

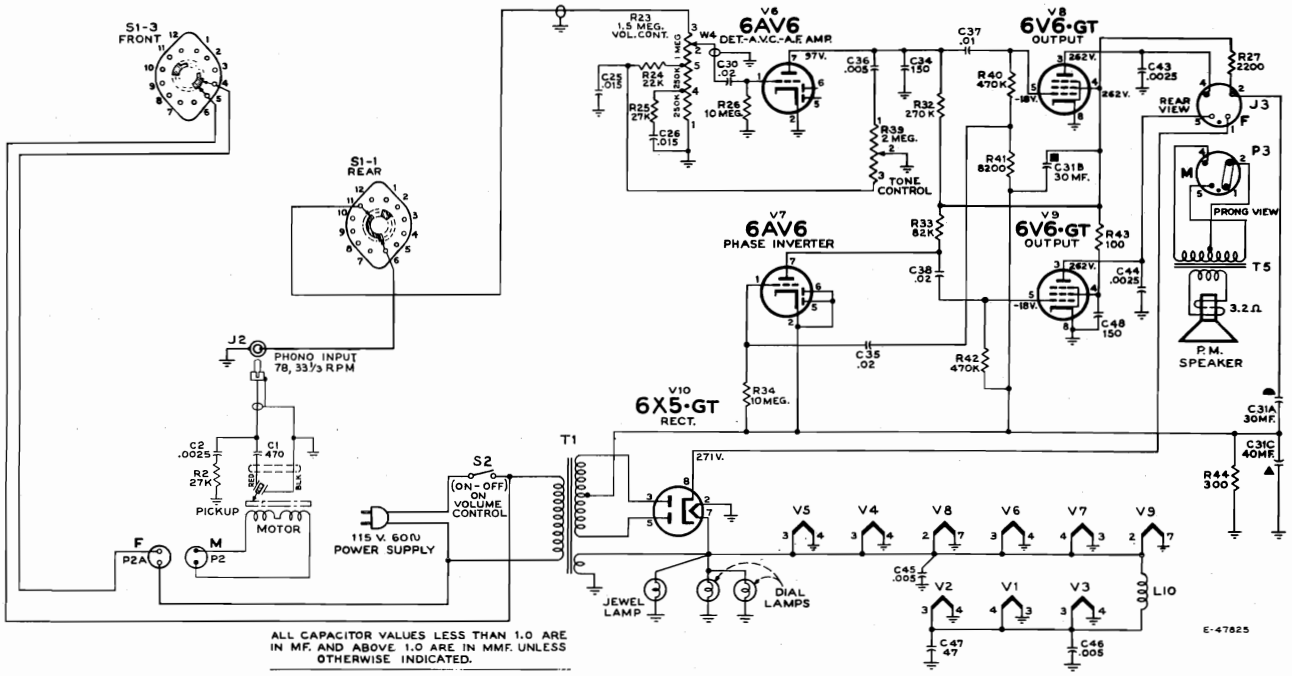

REPLACEMENT PARTS

STOCK No.	DESCRIPTION
	CHASSIS ASSEMBLIES RC 622
*74848	Board—"F.M." terminal board
*74641	Cable—Flexible cable to operate volume control
*74849	Capacitor—Variable tuning capacitor (C1-1, 1-2, 1-3, 1-4, 1-5, 1-6)
73747	Capacitor—Electrolytic, 2 mmf., 50 volts (C42)
*74733	Capacitor—Ceramic, 3 mmf. (C9)
93056	Capacitor—Ceramic, 5 mmf. (C14)
39044	Capacitor—Ceramic, 15 mmf. (C11)
39042	Capacitor—Ceramic, 47 mmf. (C47)
33379	Capacitor—Ceramic, 68 mmf. (C10, C12)
39396	Capacitor—Ceramic, 100 mmf. (C6, C8)
71614	Capacitor—Ceramic, 120 mmf. (C16)
44704	Capacitor—Ceramic, 150 mmf. (C15, C22, C23, C34, C48)
48125	Capacitor—Ceramic, 150 mmf. (C29)
71920	Capacitor—Ceramic, 220 mmf. (C5)
39640	Capacitor—Mica, 330 mmf. (C39, C40)
74093	Capacitor—Ceramic, 1,500 mmf. (C17, C24)
*74850	Capacitor—Ceramic, 1,800 mmf. (C7)
74009	Capacitor—Ceramic, dual, 4,000 mmf. (C20A, C20B, C28A, C28B)
73473	Capacitor—Ceramic, 5,000 mmf. (C3, C4, C13, C18, C32, C46)
72052	Capacitor—Electrolytic, comprising 1 section of 30 mfd, 450 volts, 1 section of 30 mfd, 350 volts and 1 section of 40 mfd, 25 volts (C31A, C31B, C31C)
71926	Capacitor—Tubular, paper, .005 mfd, 200 volts (C27, C33, C41, C45)
71553	Capacitor—Tubular, paper, .005 mfd, 400 volts (C36)
70644	Capacitor—Tubular, paper, .0025 mfd, 1,000 volts (C43, C44)
71925	Capacitor—Tubular, paper, .01 mfd, 400 volts (C37)
71928	Capacitor—Tubular, paper, .02 mfd, 200 volts (C30, C35)
73638	Capacitor—Tubular, paper, .02 mfd, 400 volts (C38)
73553	Capacitor—Tubular, paper, .05 mfd, 400 volts (C19)
72120	Capacitor—Tubular, paper, .015 mfd, 200 volts (C25, C26)
73744	Coil—Oscillator coil—A.M. (L6, L7, L8)

STOCK No.	DESCRIPTION
*74841	Coil—R.F. coil — A.M. — complete with adjustable core and stud (L4, L5)
*74815	Coil—R.F. coil—F.M. (L3)
*74816	Coil—Antenna coil—F.M. (L1)
*73817	Coil—Oscillator coil—F.M. (L9)
71942	Coil—Filament choke coil (L10)
5040	Connector—4 contact female connector for speaker cable (P3)
30868	Connector—2 contact female connector for motor cables (P2A)
*74837	Control—Tone control (R39)
74639	Control—Volume control and power switch (R23, S2)
72953	Cord—Drive cord (approx. 58" overall length)
*74839	Fastener—Push fastener to hold R.F. shelf assembly (4 required)
*74838	Grommet—Power cord strain relief grommet (1 set)
16058	Grommet—Rubber grommet for mounting R.F. shelf assembly (4 required)
72069	Grommet—Rubber grommet for rear mounting feet (2 required)
*73895	Indicator—Station selector indicator
74645	Nut—8-32 hex retainer nut between R.F. shelf and volume control knob
74297	Plate—Dial back plate complete with two (2) drive cord pulleys less dial
18469	Plate—Bakelite mounting plate for electrolytic
74640	Pulley—Pulley and hub assembly for volume control
33514	Receptacle—Phono input receptacle
73637	Resistor—Wire wound, 2,200 ohms, 5 watt (R27)
	Resistor—Fixed, composition:
	68 ohms, ±10%, ½ watt (R2, R17)
	100 ohms, ±5%, ½ watt (R29)
	100 ohms, ±10%, ½ watt (R14, R43)
	120 ohms, ±10%, ½ watt (R45)
	300 ohms, ±5%, 2 watt (R44)
	680 ohms, ±10%, ½ watt (R19)
	680 ohms, ±20%, ½ watt (R5, R22)
	1,200 ohms, ±5%, ½ watt (R35)
	3,300 ohms, ±5%, ½ watt (R37)
	8,200 ohms, ±10%, ½ watt (R41)
	8,200 ohms, ±10%, 1 watt (R4)
	10,000 ohms, ±10%, ½ watt (R47)

©John F. Rider

Compliments of www.nucow.com

MODEL A106,
Ch. RC-622

STOCK No.	DESCRIPTION
	15,000 ohms, ±10%, ½ watt (R30)
	18,000 ohms, ±10%, ½ watt (R13)
	22,000 ohms, ±10%, ½ watt (R18, R20, R24)
	27,000 ohms, ±10%, ½ watt (R25)
	33,000 ohms, ±10%, ½ watt (R3, R8)
	39,000 ohms, ±5%, ½ watt (R38)
	39,000 ohms, ±10%, 1 watt (R16)
	56,000 ohms, ±10%, ½ watt (R6, R21)
	82,000 ohms, ±10%, ½ watt (R33)
	150,000 ohms, ±10%, ½ watt (R10)
	220,000 ohms, ±10%, ½ watt (R9)
	270,000 ohms, ±10%, ½ watt (R32)
	330,000 ohms, ±10%, ½ watt (R46)
	470,000 ohms, ±10%, ½ watt (R36, R40, R42)
	2.2 megohm, ±20%, ½ watt (R1, R7, R11)
	10 megohm, ±20%, ½ watt (R26, R34)
	47 megohm, ±20%, ½ watt (R31)
73894	Shaft—Tuning knob shaft
73584	Shield—Tube shield for V1
74646	Sleeve—Sleeve and pulley assembly for volume control knob
74179	Socket—Tube socket, 7 pin, miniature for V1, V2, V3, V4
73117	Socket—Tube socket, 7 pin, miniature for V5, V6, V7
31251	Socket—Tube socket, octal, wafer for V8, V9, V10
31364	Socket—Lamp socket
74038	Spring—Drive cord spring
*74847	Support—Polystyrene support for F.M. oscillator coil complete with mounting bracket
*74840	Switch—Selector switch (S1)
73743	Transformer—Ratio detector transformer (T4)
73745	Transformer—First I.F. transformer—dual (T2)
74019	Transformer—Second I.F. transformer—dual (T3)
73601	Transformer—Power transformer—117 volt, 60 cycle (T1)
33726	Washer—"C" washer for tuning shaft
	SPEAKER ASSEMBLIES 92569-6W RL111-13 RMA 274
13867	Cap—Dust cap
74901	Cone—Cone and voice coil assembly
5039	Connector—4 contact male connector for speaker
74753	Speaker—12" P.M. speaker complete with cone and voice coil less plug and transformer
73636	Transformer—Output transformer
	NOTE: If stamping on speaker in instruments does not agree with above speaker number, order replacement parts by referring to model number of instrument, number stamped on speaker and full description of part required.
	MISCELLANEOUS
74844	Antenna—F.M. antenna
74205	Bezel—Dial scale bezel less dial
71599	Bracket—Pilot lamp bracket
74296	Cable—Shielded pickup cable complete with pin plug for 33/78 RPM changer
71105	Cable—Shielded, pickup cable complete with pin plug for 45 RPM changer
13103	Cap—Pilot lamp cap
39644	Capacitor—Mica, 470 mmf. (on 78/33⅓ RPM record changer)
70602	Capacitor—Tubular, paper, .0025 mfd (on 78/33⅓ RPM record changer), 400 volts

STOCK No.	DESCRIPTION
71892	Catch—Bullet catch and strike for doors (3 required)
73897	Clamp—Dial clamp (2 required)
X3057	Cloth—Grille cloth for mahogany or walnut instruments
X1649	Cloth—Grille cloth for blonde instruments
30868	Connector—2 contact female connector for motor cables
30870	Connector—2 contact male connector for motor cables
74581	Cover—Mounting screw cover for 45 RPM changer (3 required)
74853	Decal—Control function decal for mahogany or walnut instruments
74854	Decal—Control function decal for blonde instruments
74273	Decal—Trade mark decal (Victrola)
71984	Decal—Trade mark decal (RCA Victor)
74842	Dial—Glass dial scale
74851	Grille—Metal grille
11889	Grommet—Rubber grommet for front apron of chassis
74838	Grommet—Power cord strain relief grommet (1 set)
36610	Hinge—Door hinge (1 set) for radio compartment or R.H. record storage compartment
36817	Hinge—Door hinge (1 set) for L.H. record storage compartment
71821	Knob—Tuning control knob—maroon—for mahogany or walnut instruments
72824	Knob—Tuning control or tone control knob—brown—for blonde instruments
71822	Knob—Tone control knob—maroon—for mahogany or walnut instruments
73995	Knob—Volume control knob—brown—for blonde instruments
73994	Knob—Volume control knob—maroon—for mahogany or walnut instruments
73230	Knob—Selector switch knob—maroon—for mahogany or walnut instruments
73231	Knob—Selector switch knob—brown—for blonde instruments
11765	Lamp—Dial or pilot lamp—Mazda 51
74843	Loop—Antenna loop complete
74208	Nut—Tee nut to mount 45 RPM changer (3 required)
74852	Pull—Door pull for record changer drawers or radio compartment (5 required)
74451	Pull—Door pull for record storage compartments
	Resistor—Fixed, composition, 27,000 ohms (on 78, 33⅓ RPM record changer), ±10%, ½ watt
74582	Screw—No. 8-32 x 1¾" special head screw to mount 45 RPM changer (3 required)
74279	Screw—No. 8-32 x ⅞" trimit head screw for pull No. 74451
74269	Screw—No. 8-32 x ¾" trimit head screw for pull No. 74852
74835	Slide—Slide mechanism for 45 RPM changer drawer
74736	Slide—Slide mechanism for 33/78 RPM changer drawer
30900	Spring—Retaining spring for knobs No. 71821, 71822 and 71824
72845	Spring—Retaining spring for knobs No. 73994 and 73995
74421	Spring—Conical spring to mount 45 RPM changer—upper—R.H. (1 required)
74422	Spring—Conical spring to mount 45 RPM changer—upper—L.H. (2 required)
74423	Spring—Conical spring to mount 45 RPM changer—lower (3 required)
72936	Stop—Door stop for record storage compartments (2 required)
75146	Washer—"C" washer to mount 33/78 RPM changer (2 required)

©John F. Rider

Compliments of www.nucow.com

MODEL BX6,
Ch. RC-1082

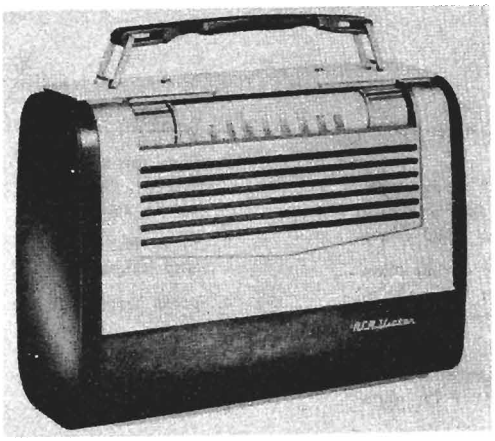

Model BX6

Specifications

Tuning Range .....540-1,600 kc
Intermediate Frequency .....455 kc

Power Supply Rating
Power Line Operation
115 volts, d. c. or 50 to 60 cycles a. c. .....15 watts
or
Battery Operated .....using RCA VS 019 Battery
(Average battery life—125 hrs. intermittent service)

Battery current ....."A" 50 ma., "B" 13 ma.

Tube Complement
(1) RCA 1T4 .....R.F. Amplifier
(2) RCA 1R5 .....Converter
(3) RCA 1T4 .....I.F.-Amplifier
(4) RCA 1U5 .....2nd Det.—AVC—1st A.F.
(5) RCA 3V4 .....Output
A selenium rectifier is used.

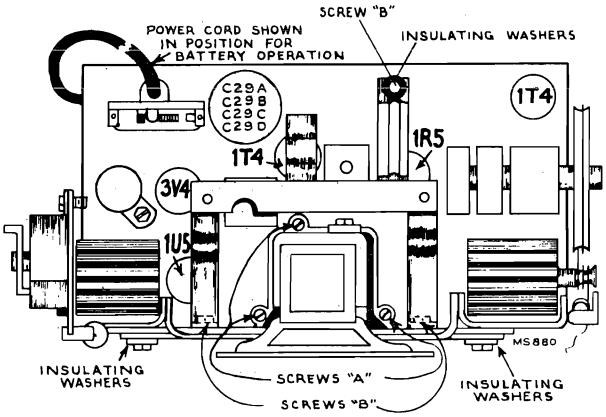

Chassis Assembly

To Remove Back Cover:

Push the wire latch on the bottom of the case to the right. Open the back about 3" and remove by easily lifting and sliding the top edge of the cover out of the case.

To Replace Back Cover:

Insert the top edge of the back cover into the case. Hold the top edge in position with one hand and press the bottom edge in place with the other hand until it is latched.

Weight (Approx.)
Without battery .....7 lbs. With battery .....10½ lbs.

Power Output
Undistorted ..... .150 watt
Maximum ..... .325 watt

Loudspeaker .....4 in. P.M.

Voice coil impedance .....3.2 ohms at 400 cycles

Cabinet Dimensions
Height .....10 in. Width .....13 in. Depth .....5½ in.

CAUTION.—

1. **Do not remove any tubes from the chassis with the set operating and the plug connected to the power line. Damage to tubes may result.**
2. **When cleaning the aluminum portion of the case use soap and water or cleaning fluid. Do not use abrasive cleansers.**

To Remove Chassis:

1. Loosen battery clamps, pull out battery and disconnect battery plug.
2. Unsolder the two loop antenna leads.
3. Remove the two large screws (under handle) in the top of the case (do not loosen small screws).
4. Lay receiver on table with face down.
5. Remove the two screws holding chassis to case sides.
6. The chassis may now be lifted from the case.

To Remove Speaker:

1. Remove chassis from case as described above.
2. Unsolder output transformer leads from speaker.
3. Un-hook dial cord tension spring.
4. Remove the two screws "B" holding dial bracket to chassis support bracket.
5. Remove the four screws holding dial bracket to chassis base.
6. Tilt dial bracket forward and remove three screws "A" holding speaker bracket to chassis base.

Insulating Washers:

The mounting bracket and dial frame are insulated from the chassis with insulating washers. This serves to insulate the case from the chassis. In servicing make certain that these washers are in place and properly positioned.

©John F. Rider

Compliments of www.nucow.com

MODEL BX6,
Ch. RC-1082

Alignment Procedure

Output Meter Alignment.—If this method is used, connect the meter across the voice coil and turn the receiver volume control to maximum.

Test Oscillator.—For all alignment operations, connect the low side of the test oscillator to the receiver chassis and keep the oscillator output as low as possible to avoid AVC action.

Battery operation of the receiver is preferable during alignment; on AC operation an isolation transformer (117v./117v.) may be necessary for the receiver if the test oscillator is also AC operated.

Calibration Scale.—The calibrated dial scale is attached to the chassis. It can be used directly as a reference for alignment.

With the gang at full mesh set the dial pointer so that the pointer is ¼" to the left of the 55 calibration on the dial scale.

Alignment Tabulation

Step	Connect High Side of Sig. Gen. to—	Sig. Gen. Output	Dial Pointer Setting	Adjust for Max. Output
1	Pin #6 of 1T4 I.F. Amplifier thru .005 mf.	455 kc	Quiet point near 1600 kc	2nd I.F. Trans. T2 Top & Bottom
2	Pin #6 of 1R5 Converter thru .005 mf.			1st I.F. Trans. T1 Top & Bottom
3	Replace bottom cover. Install chassis in case, connect loop and battery. Place "Dummy"* back cover on case.			
4	Short wire placed near loop for radiated signal	1600 kc	1600 kc	C11 (osc.)
5		1400 kc	1400 kc	C10 (r. f.) C1 (loop)
6		600 kc	600 kc	L4 (osc.) L3 (r. f.) Alternately while rocking gang
7	Repeat steps 4, 5, and 6			

* A "dummy" back cover is one having holes provided to permit alignment with the cover in place. The battery and back cover affect loop alignment. The battery should be in place. If a "dummy" back cover is not available, an improvised cover should be made of sheet aluminum. It should not make contact with any metal portion of the case or chassis.

Critical Lead Dress

1. Dress all filament leads next to chassis.
2. Keep the leads short on the end of the three components, (R1, R2, C2) which connect to the grid terminal (#6) of the r.f. socket.
3. Dress tuning condenser leads direct and avoid excess lead length.
4. Dress loop leads away from tuning drum and battery.
5. Dress r.f. plate lead against chassis base.
6. Dress a.v.c. lead against chassis base.
7. Dress +B lead to output transformer against chassis base.
8. Dress 1st a.f. plate resistor (R13) up and away from other wiring.
9. Dress all leads away from the ballast resistor.
10. Dress ON-OFF switch leads clear of switch actuating lever and shutter.
11. Dress 1st a.f. grid resistor (R11) close to chassis.
12. Dress capacitor C4 in air between end apron and r.f. coil and away from selenium rectifier, with foil end to tuning condenser frame.

Power Line Operation.—

A power cord is stored in the fiber tube which is clamped above the chassis inside the cabinet. To open the cabinet, push the wire latch on the bottom of the case to the right, and lift the back cover up and off. Then pull the power cord plug out of the socket on the top of the chassis as shown, and take out and unroll the power cord. A slot in the bottom of the cabinet allows the closing of the cabinet with the power cord passing through. Replace the back cover with the cord extending through the slot and insert the plug into a convenient electrical outlet.

When returning to battery operation, be sure to replace the power plug in its socket inside the case with the cord stored in the fiber tube.

NOTE: If reception is not obtained on DC, reverse plug in outlet receptacle. This may also reduce hum on AC operation.

To Replace Top Cover:

Assemble handle to cover and case front but do not tighten screws (small). Replace and tighten chassis mounting screws (large). Tighten the screws holding handle to top cover and case front.

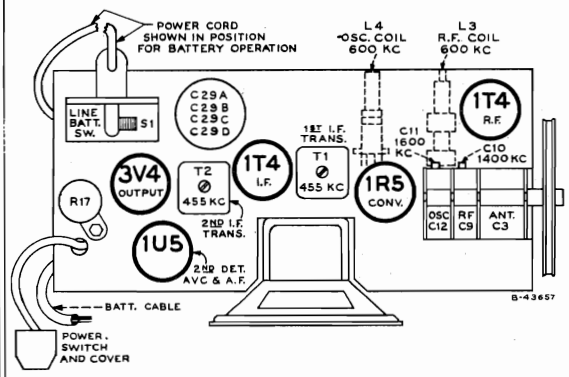

Tube and Trimmer Locations

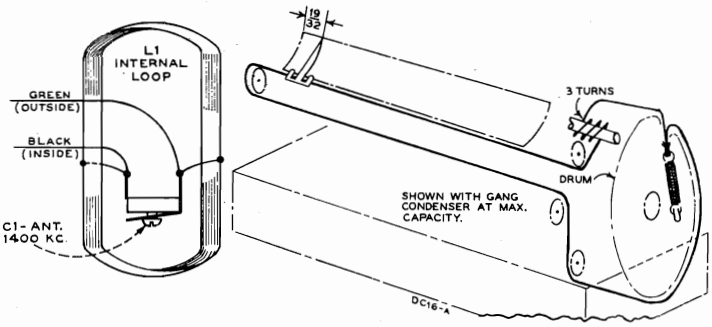

Dial-Indicator and Drive Mechanism

©John F. Rider

Compliments of www.nucow.com

MODEL BX6,
Ch. RC-1082

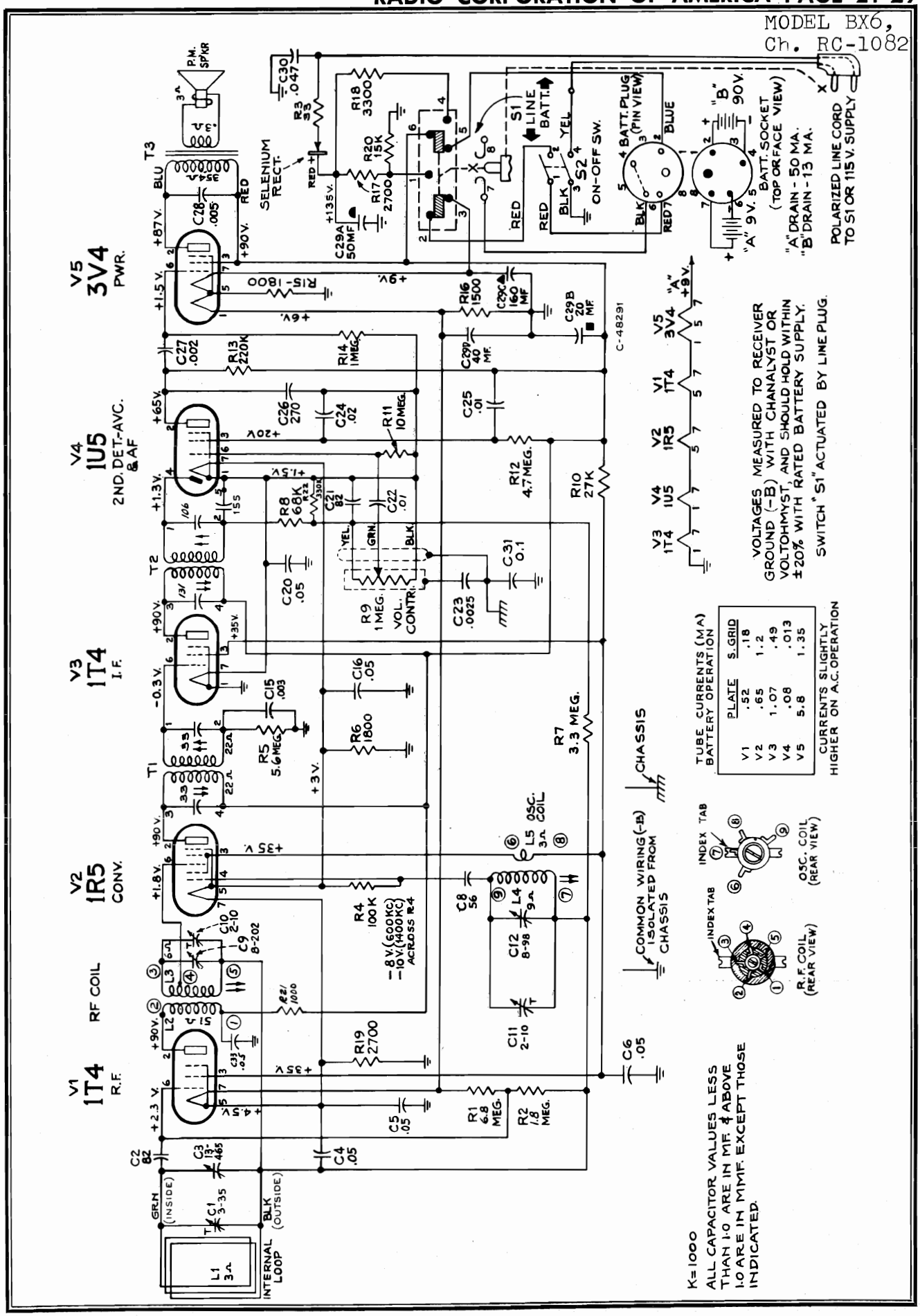

©John F. Rider

Compliments of www.nucow.com

MODEL BX6,
Ch. RC-1082

Replacement Parts

STOCK No.	DESCRIPTION
	CHASSIS ASSEMBLIES RC 1082
71044	Bracket—Power switch bracket complete with actuating lever less switch
71056	Bracket—Drive cord pulley bracket complete with pulley (volume control side)
74995	Bracket—Drive cord pulley bracket complete with 2 pulleys
74991	Capacitor—Variable tuning capacitor complete with drum C3, C9, C10, C11, C12
71924	Capacitor—Ceramic, 56 mmf. C8
71514	Capacitor—Ceramic, 82 mmf. C2, C21
73922	Capacitor—Ceramic, 270 mmf. C26
73113	Capacitor—Electrolytic, comprising 1 section of 50 mfd., 150 volts, 1 section of 20 mfd., 150 volts, 1 section of 160 mfd., 25 volts and 1 section of 40 mfd., 25 volts C29A, C29B, C29C, C29D
73750	Capacitor—Tubular, paper, .002 mfd., 200 volts ..C27
70602	Capacitor—Tubular, paper, .0025 mfd., 400 volts ..C23
73961	Capacitor—Tubular, paper, .003 mfd., 200 volts C15
71553	Capacitor—Tubular, paper, .005 mfd., 400 volts ..C28
71923	Capacitor—Tubular, paper, .01 mfd., 200 volts C22, C25
71928	Capacitor—Tubular, paper, .02 mfd., 200 volts C24
75071	Capacitor—Tubular, moulded paper, .047 mfd., 400 volts C30
71551	Capacitor—Tubular, paper, .05 mfd., 200 volts C5, C16, C20
73553	Capacitor—Tubular, paper, .05 mfd., 400 volts C4, C6, C33
70617	Capacitor—Tubular, paper, 0.1 mfd., 400 volts C31
73935	Clip—Mounting clip for I.F. transformer
73114	Coil—Oscillator coil complete with adjustable core L4, L5
74992	Coil—R.F. coil complete with adjustable core ..L2, L3
71041	Connector—4 contact male connector for battery cable
71057	Control—Volume control R9
†72953	Cord—Drive cord (approx. 38" overall length required)
70022	Cord—Power cord
74998	Dial—Dial scale and window assembly
74838	Grommet—Power cord strain relief grommets (1 set)
72283	Grommet—Rubber grommet to mount tuning capacitor
71031	Holder—Power cord holder (fibre tube)
73111	Indicator—Station selector indicator
74994	Knob—Tuning or volume control knob (roller type)
18469	Plate—Bakelite mounting plate for electrolytic capacitor
72602	Pulley—Drive cord pulley (removable)
74322	Rectifier—Selenium rectifier
73237	Resistor—Wire wound, fuse type, 33 ohms, 150 MA R3
74993	Resistor—Molded ceramic, 2700 ohms, 10 watts ..R17
	Resistor—Fixed, composition:—
	1000 ohms, ±10%, ½ watt R21
	1500 ohms, ±10%, ½ watt R16
	1800 ohms, ±10%, ½ watt R6, R15
	2700 ohms, ±10%, ½ watt R19
	3300 ohms, ±10%, 1 watt R18
	15,000 ohms, ±20%, ½ watt R20
	27,000 ohms, ±10%, ½ watt R10
	68,000 ohms, ±20%, ½ watt R8
	100,000 ohms, ±20%, ½ watt R4
	220,000 ohms, ±20%, ½ watt R13
	330,000 ohms, ±10%, ½ watt R22
	1 megohm, ±20%, ½ watt R14
	1.8 megohm, ±10%, ½ watt R2
	3.3 megohm, ±10%, ½ watt R7
	4.7 megohm, ±20%, ½ watt R12
	5.6 megohm, ±10%, ½ watt R5
	6.8 megohm, ±10%, ½ watt R1
	10 megohm, ±20%, ½ watt R11

STOCK No.	DESCRIPTION
73122	Shaft—Tuning knob shaft
74996	Shield—End shield for dial—L.H.
74997	Shield—End shield for dial—R.H.
73117	Socket—Tube socket
74038	Spring—Drive cord spring
30900	Spring—Retaining spring for knob
71039	Switch—"Line-Battery" change switch S1
71045	Switch—Power switch—less cover and actuating lever S2
73129	Transformer—First I.F. transformer T1
73037	Transformer—Second I.F. transformer T2
71047	Transformer—Output transformer T3
73332	Washer—Insulating washer (flat) for mounting base holder bracket (1 req'd) and dial support to chassis (4 req'd)
73333	Washer—Insulating washer (extruded) for mounting base holder bracket (1 req'd) and dial support to chassis (4 req'd)
71081	Washer—Spring washer to hold removable drive cord pulley
	SPEAKER ASSEMBLIES 92577-3W
71059	Gasket—Speaker gasket (black tubing)
73123	Speaker—4" P.M. speaker complete with cone and voice coil
	MISCELLANEOUS
71074	Arm—Shutter arm lever
74999	Back—Case back complete with latch
71073	Bracket—Bearing bracket for shutter arm lever
71070	Bracket—Mounting bracket for #71069 adjustable capacitor
71069	Capacitor—Adjustable trimmer capacitor 3-35 mmf. C1
75001	Clip—Clip to hold battery (2 req'd)
75005	Clip—"C" clip (threaded) for battery holder clip (2 req'd)
75009	Clip—Clip to hold chassis to case (end plates) (2 req'd)
75010	Clip—"C" clip and screw for fastening case front (4 req'd)
71080	Clip—Case side spring clip and screw (2 req'd)
75013	Clip—Spring clip with tab for fastening case front to case sides (4 req'd)
75011	Emblem—"RCA Victor" emblem
75006	Front—Case front complete with insulating strip and support feet—less shutter
75016	Handle—Carrying handle—less links
75004	Latch—Spring latch for back cover
75018	Link—Carrying handle link—less mounting plate
71079	Loop—Antenna loop L1
75003	Nut—Speed nut to mount carrying handle
75015	Pin—Pivot pin (stud) for case shutter
75000	Plate—Case top plate—less handle
75017	Plate—Mounting plate for carrying handle (2 req'd)
75002	Screw—#4 x 3/8" round head cross recessed self-tapping screw to mount carrying handle
71066	Screw—#8-32 x 7/16" cross recessed binder head screw to hold chassis to top plate (2 req'd)
75014	Screw—#4 x 1/4" pan head screw for #75013 spring clip (4 req'd) or capacitor bracket (2 req'd)
71071	Shutter—Case shutter
75012	Side—Case side only—less pivot pin
71072	Spring—Case shutter compression spring
75007	Strip—Case front insulating strip complete with latch plate
75008	Support—Moulded support foot for case (2 req'd)
74353	Washer—Spring washer for shutter shafts

†Stock No. 72953 is a reel containing 250 feet of cord.

©John F. Rider

Compliments of www.nucow.com

MODEL BX55
Ch. RC-1088

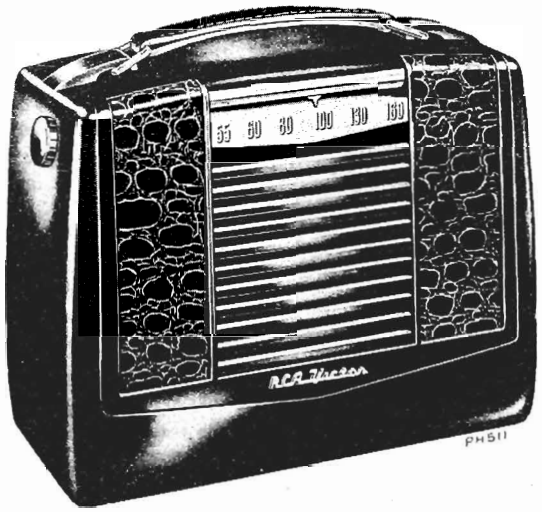

Specifications

Tuning Range .....540-1600 kc.

Intermediate Frequency .....455 kc.

Tube Complement

(1) RCA 1R5 .....Converter
(2) RCA 1T4 .....I. F. Amplifier
(3) RCA 1U5 .....Det.—A.V.C.—A. F. Amp.
(4) RCA 3V4 .....Output

A selenium rectifier is used

Power Supply Rating

Power Line Operation

115 volts, d. c. or 50 to 60 cycles a. c. .....18 watts

or

Battery Operated .....VS 050 Battery

(Average life—100 hrs. intermittent service)

Loudspeaker (92577-3)

Size and type .....4 in. P.M. dynamic

Voice coil impedance .....3.2 ohms at 400 cycles

Tuning Drive Ratio .....8:1 (4 turns of knob)

Power Output

Undistorted—170 milliwatts Maximum—350 milliwatts

(Output is slightly lower on battery operation)

Cabinet Dimensions

Height 8¼ in. Width 10¾ in. Depth 5 in.

Weight (Approx.)

5 lb. less battery 8 lb. 2 oz. with battery

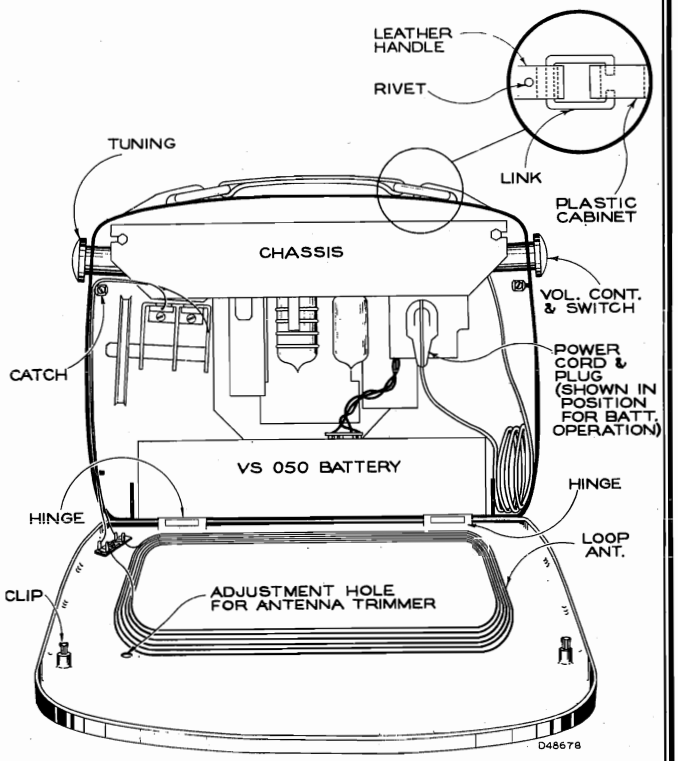

AC-DC Operation

A power cord is stored inside the cabinet. To open the cabinet, pull backwards on the top of the cabinet back. It is secured by means of two spring clips and catches on the inside of the cabinet. Remove the plug of the power cord from its socket on the chassis and insert the plug into a convenient electrical power outlet. A notch in the right side of the cabinet allows the back to be closed with the cord passing through.

Notes: 1. Maximum performance is obtained with the battery in place. Receiver sensitivity will be lowered if the battery is not in place during AC-DC operation since the battery affects the loop inductance.

2. If reception is not obtained on DC, reverse plug in power outlet. On AC operation, reversal of the plug may reduce hum.

To Remove Carrying Handle

1. Remove rivets from handle.
2. Turn link and slip out of handle and cabinet.

Cabinet Back and Hinges

The cabinet back and hinges may be readily detached from the cabinet. See back page for detailed instructions on their removal.

Battery Operation

Replace the power cord plug in the socket provided on the back of the chassis. Coil up the power cord and place it alongside of the battery. Make certain that it will not interfere with the tuning condenser.

Note: Make certain that the plug is fully inserted (base of plug touching chassis) to assure proper operation of the Batt-Line switch.

©John F. Rider

Compliments of www.nucow.com

MODEL BX55,
Ch. RC-1088

Alignment Procedure

Signal Generator.—For all alignment operations, connect the low side of the signal generator to the receiver chassis and keep the output as low as possible to avoid AVC action.

Battery operation of the receiver is preferable during alignment; on a. c. operation an isolation transformer (117v./117v.) may be necessary for the receiver if the signal generator is also a. c. operated.

Note: Battery must be in place for ant. alignment (step 6).

Dial Pointer Position.—With the tuning condenser fully meshed the center of the dial pointer should be in line with the score mark on the chassis.

Alignment Tabulation

Step	Connect high side of signal generator to—	Signal generator output	Dial pointer setting	Adjust for maximum output—
1	Disconnect loop — remove chassis — remove bottom plate, connect a 10,000 ohm resistor from C1-1 stator terminal to tuning condenser frame.			
2	Grid of 1T4 (pin No. 6) thru .01 mf. capacitor	455 kc	Quiet point near 1600 kc	T2 (top) 2nd. I-F trans.
3	Stator term. of C1-1 thru .01 mf. capacitor			T1 (top & bottom) 1st. I-F trans.
4	Remove the 10,000 ohm resistor. Replace bottom cover and install chassis in cabinet. Re-connect loop.			
5	Short wire placed near receiver (for radiated signal)	1620 kc	Tuning condenser fully open	C1-2 trimmer (osc.)
6		1300 kc	1300 kc signal	†C1-1 trimmer (ant.)

† With back closed. Trimmer is accessible thru hole in back.

NOTE:
The magnetite cores of T2 and T1 may not have visible adjusting screws. The cores have screw driver slots to permit adjustment (use non-metallic screwdriver).

Critical Lead Dress

1. Dress antenna loop leads away from adjusting screws on tuning condenser.
2. Dress all capacitors against chassis base.
3. Dress oscillator coil away from chassis and bottom cover.
4. Dress output transformer primary leads against chassis.
5. Dress all leads and components away from selenium rectifier.
6. Dress loop antenna leads into recesses provided in the side of the cabinet. Leave slack at hinged edge of cabinet.

Note: This instrument is designed to be operated with a battery in position inside the cabinet. Reception will be below normal unless the battery is in its normal location.

The position of the battery pack affects the loop inductance. Therefore, when the battery is removed, the loop inductance will change (increase) and the sensitivity will be slightly worse because of improper electrical tracking of the loop circuit with the heterodyne oscillator of the receiver.

CAUTION.—
Do not remove any tubes from the chassis with the set operating and the plug connected to the power line. Damage to tubes may result.

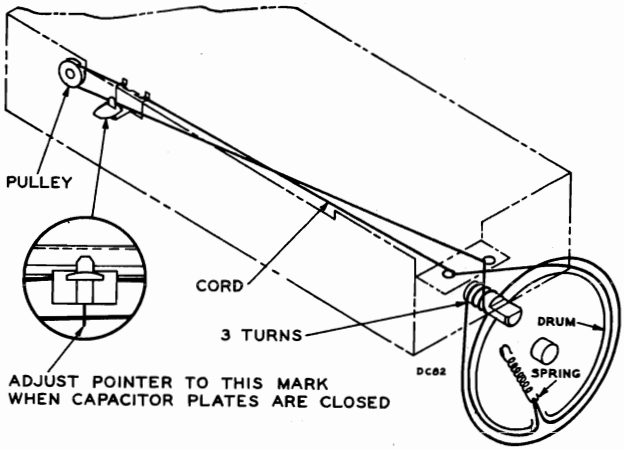

Dial Indicator and Drive Mechanism

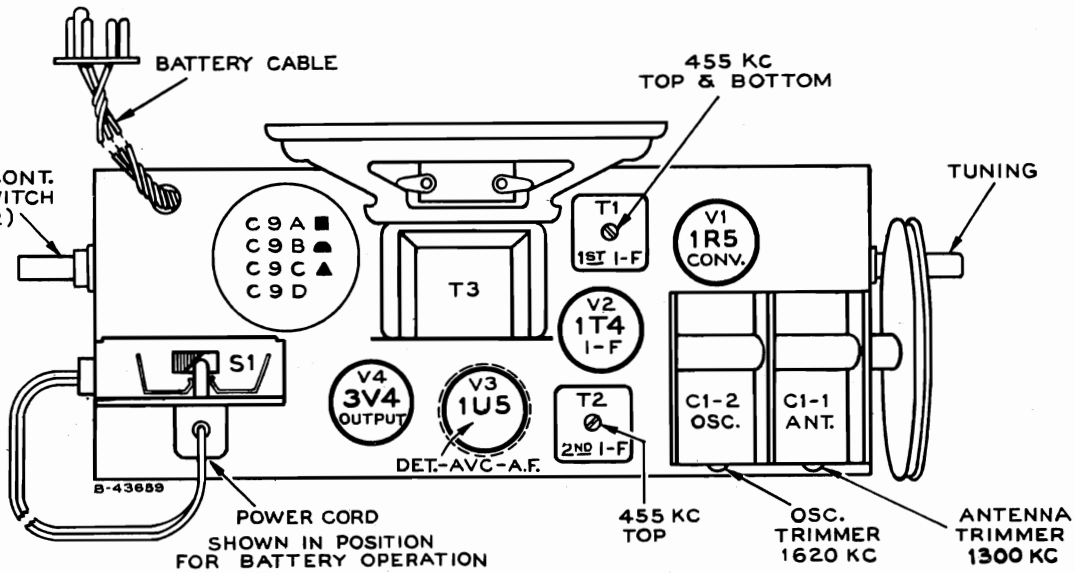

Tube and Trimmer Locations

©John F. Rider

Compliments of www.nucow.com

MODEL BX55,
Ch. RC-1088

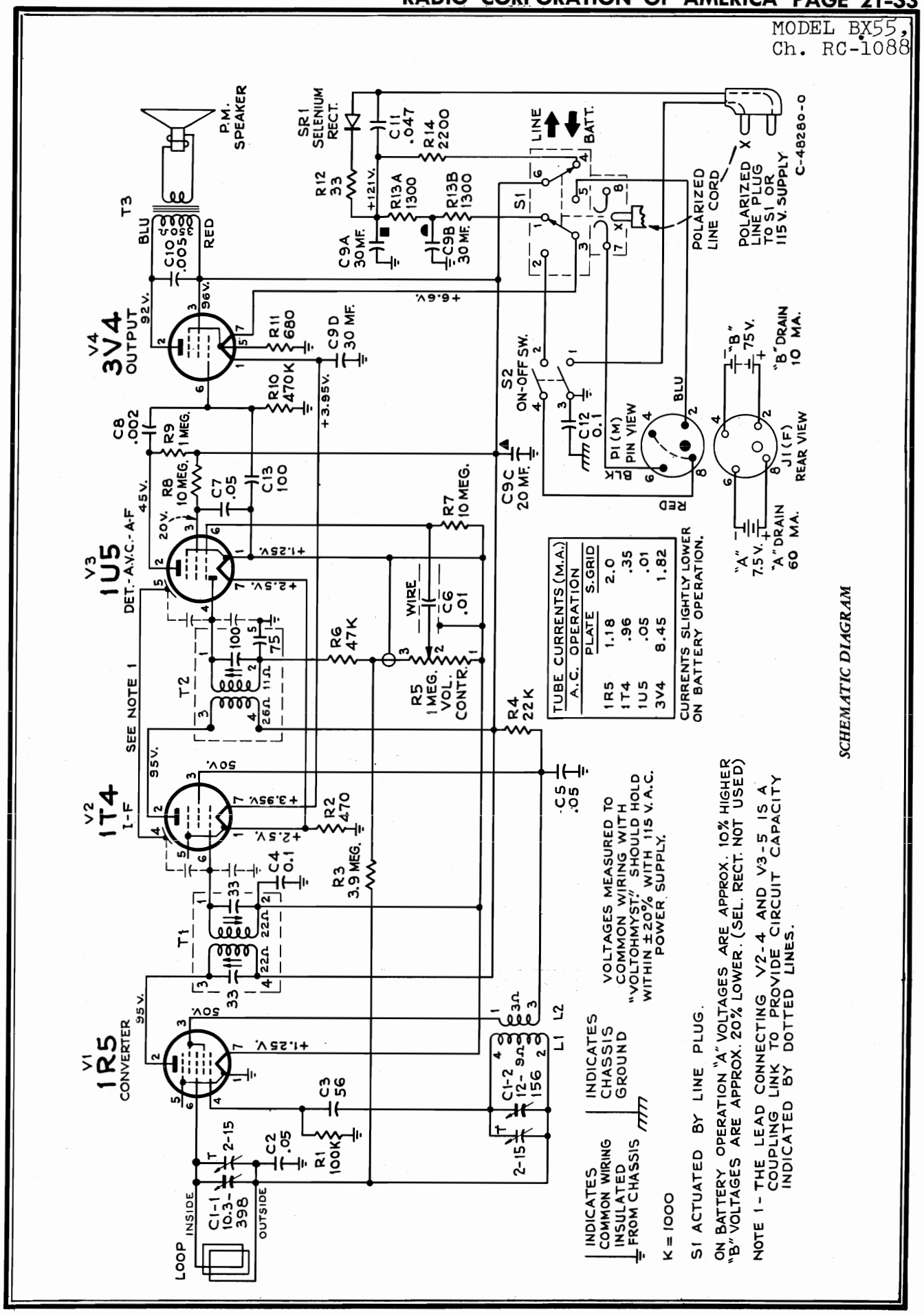

SCHEMATIC DIAGRAM

©John F. Rider

Compliments of www.nucow.com

MODEL BX55,
Ch. RC-1088

Replacement Parts

STOCK No.	DESCRIPTION
	CHASSIS ASSEMBLIES
	RC 1088
74778	Capacitor—Variable tuning capacitor C1-1,C1-2
39622	Capacitor—Mica, 56 mmf. C3
39628	Capacitor—mica, 100 mmf. C13
74774	Capacitor—Electrolytic, comprising 2 sections of 30 mfd., 150 volts, 1 section of 20 mfd., 150 volts and 1 section of 30 mfd., 25 volts..C9A, C9B, C9C, C9D
72315	Capacitor—Tubular, paper, .002 mfd., 200 volts C8
73920	Capacitor—Tubular, paper, .005 mfd., 400 volts C10
73561	Capacitor—Tubular, paper, .01 mfd., 400 volts C6
75071	Capacitor—Tubular, moulded paper, .047 mfd., 400 volts C11
73553	Capacitor—Tubular, paper, .05 mfd., 400 volts C2, C5, C7
70617	Capacitor—Tubular, paper, 0.1 mfd., 400 volts C4, C12
73935	Clip—Mounting clip for I.F. transformer
74780	Coil—Oscillator coil L1, L2
73275	Connector—5 contact male connector for battery cable P1
73125	Control—Volume control and power switch R5, S2
71457	Cord—Power cord and plug
†72953	Cord—Drive cord (approx. 40" overall length req'd)
72283	Grommet—Rubber grommet to mount tuning capacitor (3 required)
74838	Grommet—Power cord strain relief grommet (1 set)
74776	Indicator—Station selector indicator
18469	Plate—Mounting plate for electrolytic capacitor
72602	Pulley—Drive cord pulley
74322	Rectifier—Selenium rectifier SR1
73237	Resistor—Wire wound (fuse type) 33 ohms R12
74777	Resistor—Voltage divider, dual, 1300 ohms, 3.5 watts R13A, R13B
	Resistor—Fixed, composition:—
	470 ohms, ±20%, ½ watt R2
	680 ohms, ±20%, ½ watt R11
	2200 ohms, ±10%, ½ watt R14
	22,000 ohms, ±20%, ½ watt R4
	47,000 ohms, ±20%, ½ watt R6
	100,000 ohms, ±20%, ½ watt R1
	470,000 ohms, ±20%, ½ watt R10
	1 megohm, ±20%, ½ watt R9
	3.9 megohm, ±10%, ½ watt R3
	10 megohm, ±20%, ½ watt R7, R8
74773	Shaft—Tuning knob shaft
73103	Shield—Tube shield for 1U5 tube
73117	Socket—Tube socket, miniature
74038	Spring—Drive cord tension spring
71039	Switch—"Line-Battery" change switch S1
73129	Transformer—First I.F. transformer T1
74775	Transformer—Second I.F. transformer T2
74779	Transformer—Output transformer T3
33726	Washer—"C" washer for tuning knob shaft
	SPEAKER ASSEMBLY
	92577-3
74165	Speaker—4" P.M. speaker complete with cone and voice coil
	MISCELLANEOUS
75048	Back—Cabinet back complete with loop
74787	Board—Terminal board—2 contact
Y2220	Case—Cabinet front less back, emblem, handle, and dial
74339	Catch—Cabinet back catch (part of cabinet front)
74734	Clip—Spring clip for knob
74792	Clip—Striking clip for catch (part of cabinet back) (2 required)
74784	Dial—Metal dial scale
74782	Emblem—"RCA Victor" emblem
74785	Handle—Carrying handle
74790	Hinge—Cabinet hinge (2 required)
74666	Knob—Tuning or volume control and power switch knob
74786	Link—Link for carrying handle (2 required)
74789	Loop—Antenna loop winding
74788	Nut—Speed nut to mount terminal board
73203	Nut—Speed nut to fasten dial (2 required) or decorative plate (2 required) to cabinet
75448	Rivet—Bevel pointed rivet for handle (2 required)
75435	Screen—Crinoline screen for speaker grille
74783	Plate—Decorative plate (satin finish) for cabinet (above dial)
74301	Screw—No. 8-32 x ⅜" pan head cross recessed screw for chassis mounting (2 required)
74791	Screw—No. 4 x 5/16" pan head cross recessed screw to fasten catch to cabinet front.

† Stock No. 72953 is a reel which contains 250 ft. of cord.

To Remove Cabinet Back

Disconnect the loop antenna leads. With the back fully open, grip the cabinet as illustrated. Insert a screwdriver under one hinge and pry the center of the hinge out of the opening in the cabinet while maintaining pressure on the back with the fingers and on the cabinet with the thumb. Repeat this procedure with the other hinge. Pull the back straight to the rear using both hands.

To Remove Hinges

Remove back from cabinet as described above. Spread the hinge apart to remove it from the cabinet back.

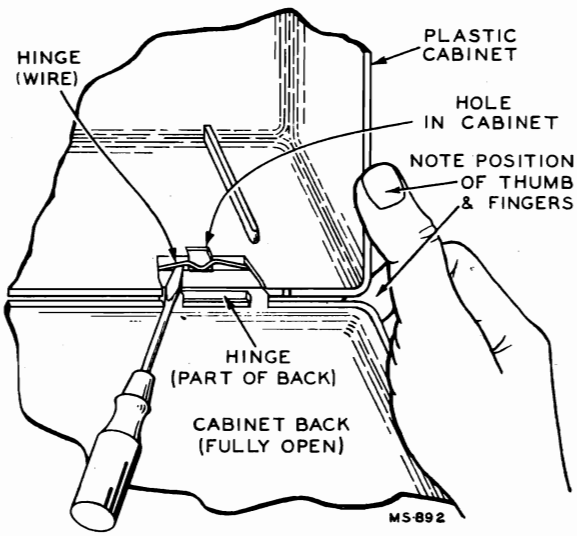

Removal of Cabinet Back

©John F. Rider

Compliments of www.nucow.com

MODEL BX57,
Ch. RC-1088A

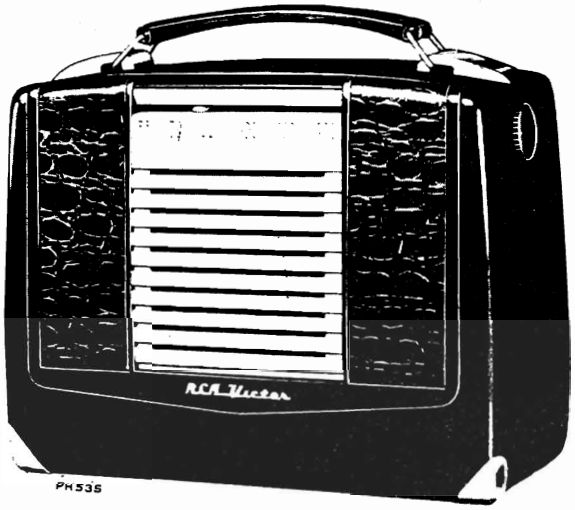

Specifications

Tuning Range .....540-1600 kc.

Intermediate Frequency .....455 kc.

Tube Complement

(1) RCA 1R5 .....Converter
(2) RCA 1U4 .....I. F. Amplifier
(3) RCA 1U5 .....Det.—A.V.C.—A. F. Amp.
(4) RCA 3V4 .....Output

A selenium rectifier is used

Power Supply Rating

Power Line Operation

115 volts, d. c. or 50 to 60 cycles a. c. .....18 watts

or

Battery Operated .....VS 050 Battery

(Average battery life—100 hrs. intermittent service)

Loudspeaker (92577-3)

Size and type .....4 in. P.M. dynamic
Voice coil impedance .....3.2 ohms at 400 cycles

Tuning Drive Ratio .....8:1 (4 turns of knob)

Power Output

Undistorted—170 milliwatts Maximum—350 milliwatts

(Output is slightly lower on battery operation)

Cabinet Dimensions

Height 8¼ in. Width 10¾ in. Depth 5 in.

Weight (Approx.)

5 lb. less battery 8 lb. 2 oz. with battery

AC-DC Operation

A power cord is stored inside the cabinet. To open the cabinet, pull backwards on the top of the cabinet back. It is secured by means of two spring clips and catches on the inside of the cabinet. Remove the plug of the power cord from its socket on the chassis and insert the plug into a convenient electrical power outlet. A notch in the right side of the cabinet allows the back to be closed with the cord passing through.

Notes: 1. Maximum performance is obtained with the battery in place. Receiver sensitivity will be lowered if the battery is not in place during AC-DC operation since the battery affects the loop inductance.

2. If reception is not obtained on DC, reverse plug in power outlet. On AC operation, reversal of the plug may reduce hum.

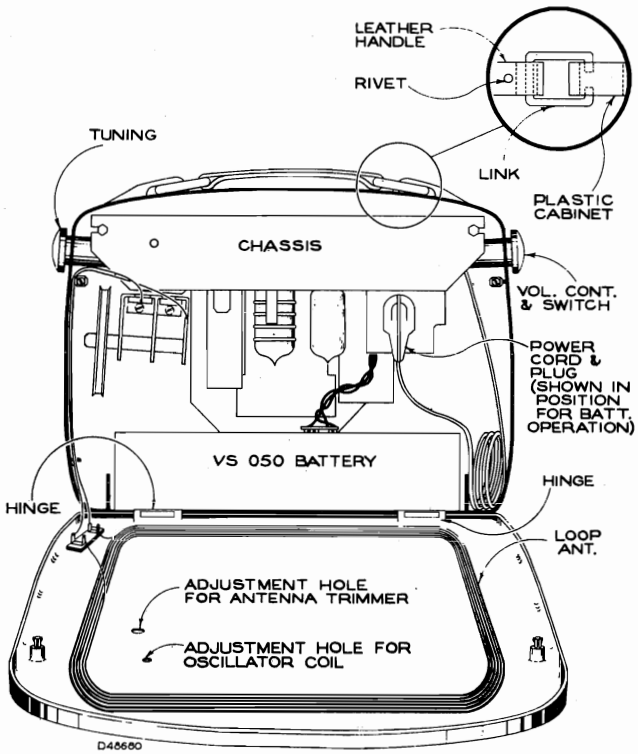

To Remove Carrying Handle

1. Remove rivets from handle.
2. Turn link and slip out of handle and cabinet.

Cabinet Back and Hinges

The cabinet back and hinges may be readily detached from the cabinet. See back page for detailed instructions on their removal.

Battery Operation

Replace the power cord plug in the socket provided on the back of the chassis. Coil up the power cord and place it alongside of the battery. Make certain that it will not interfere with the tuning condenser.

Note: Make certain that the plug is fully inserted (base of plug touching chassis) to assure proper operation of the Batt-Line switch.

©John F. Rider

Compliments of www.nucow.com

MODEL BX57,
Ch. RC-1088A

Alignment Procedure

Signal Generator—For all alignment operations, connect the low side of the signal generator to the receiver chassis and keep the output as low as possible to avoid AVC action.

Battery operation of the receiver is preferable during alignment; on a. c. operation an isolation transformer (117v./117v.) may be necessary for the receiver if the signal generator is also a. c. operated.

Note: Battery must be in place for ant. alignment (step 6).

Dial Pointer Position.—With the tuning condenser fully meshed the center of the dial pointer should be in line with the score mark on the chassis.

Alignment Tabulation

Step	Connect high side of signal generator to—	Signal generator output	Dial pointer setting	Adjust for maximum output—
1	Disconnect loop — remove chassis — remove bottom plate, connect a 10,000 ohm resistor from C1-1 stator terminal to tuning condenser frame.			
2	Grid of 1U4 (pin No. 6) thru .01 mf. capacitor	455 kc	Quiet point near 1600 kc	T2 (top & bottom) 2nd. I-F trans.
3	Stator term. of C1-1 thru .01 mf. capacitor			T1 (top & bottom) 1st. I-F trans.
4	Remove the 10,000 ohm resistor. Replace bottom cover and install chassis in cabinet. Re-connect loop.			
5	Short wire placed near receiver (for radiated signal)	1620 kc	Tuning condenser fully open	C1-2 trimmer (osc.)
6		1400 kc	1400 kc signal	†C1-1 trimmer (ant.)
7		600 kc	600 kc signal	†L1 (osc.) rock gang
8	Repeat steps 5 and 6.			

† With back closed. Trimmer is accessible thru hole in back.

NOTE:
The magnetite cores of T2 and T1 may not have visible adjusting screws. The cores have screwdriver slots to permit adjustment (use non-metallic screwdriver).

Critical Lead Dress

1. Dress antenna loop leads away from adjusting screws on tuning condenser.
2. Dress all capacitors against chassis base.
3. Dress oscillator coil away from chassis and bottom cover.
4. Dress output transformer primary leads against chassis.
5. Dress all leads and components away from selenium rectifier.
6. Dress the 4 mmf. capacitor (C15) down against the .003 mf. capacitor (C14).
7. Capacitor C15 must be connected to the plate terminal of the 1U4 socket with as short lead as possible.
8. Dress loop antenna leads into recesses provided in the side of the cabinet. Leave slack at hinged edge of cabinet.

Note: This instrument is designed to be operated with a battery in position inside the cabinet. Reception will be below normal unless the battery is in its normal location.

The position of the battery pack affects the loop inductance. Therefore, when the battery is removed, the loop inductance will change (increase) and the sensitivity will be slightly worse because of improper electrical tracking of the loop circuit with the heterodyne oscillator of the receiver.

CAUTION.—
Do not remove any tubes from the chassis with the set operating and the plug connected to the power line. Damage to tubes may result.

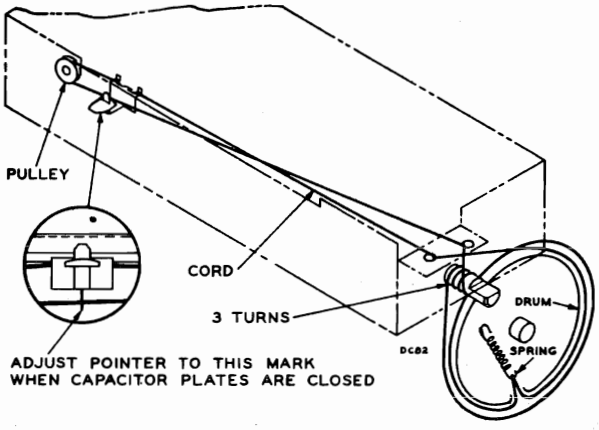

Dial Indicator and Drive Mechanism

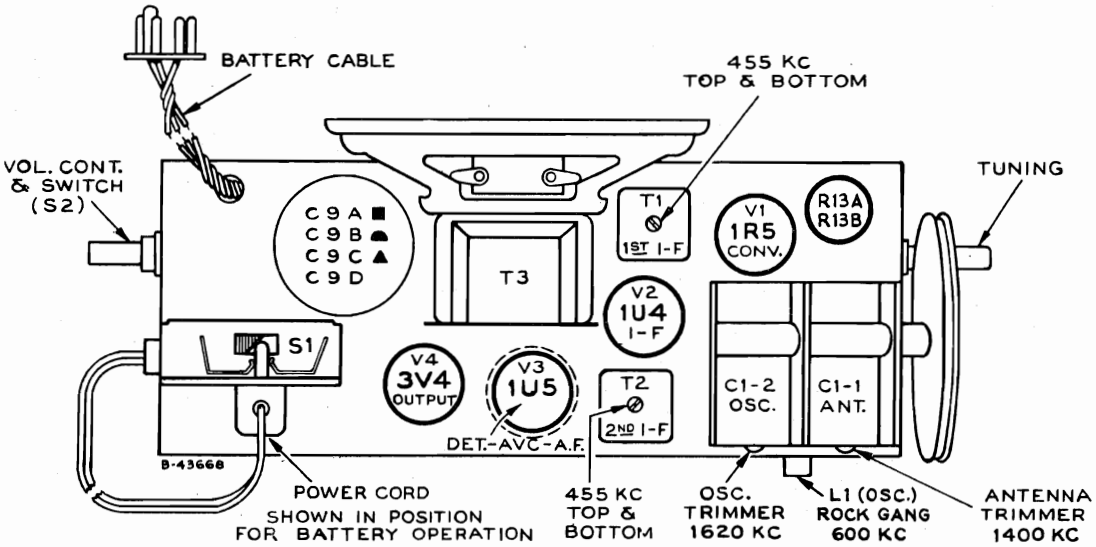

Tube and Trimmer Locations

©John F. Rider

Compliments of www.nucow.com

MODEL BX57, Ch. RC-1088A

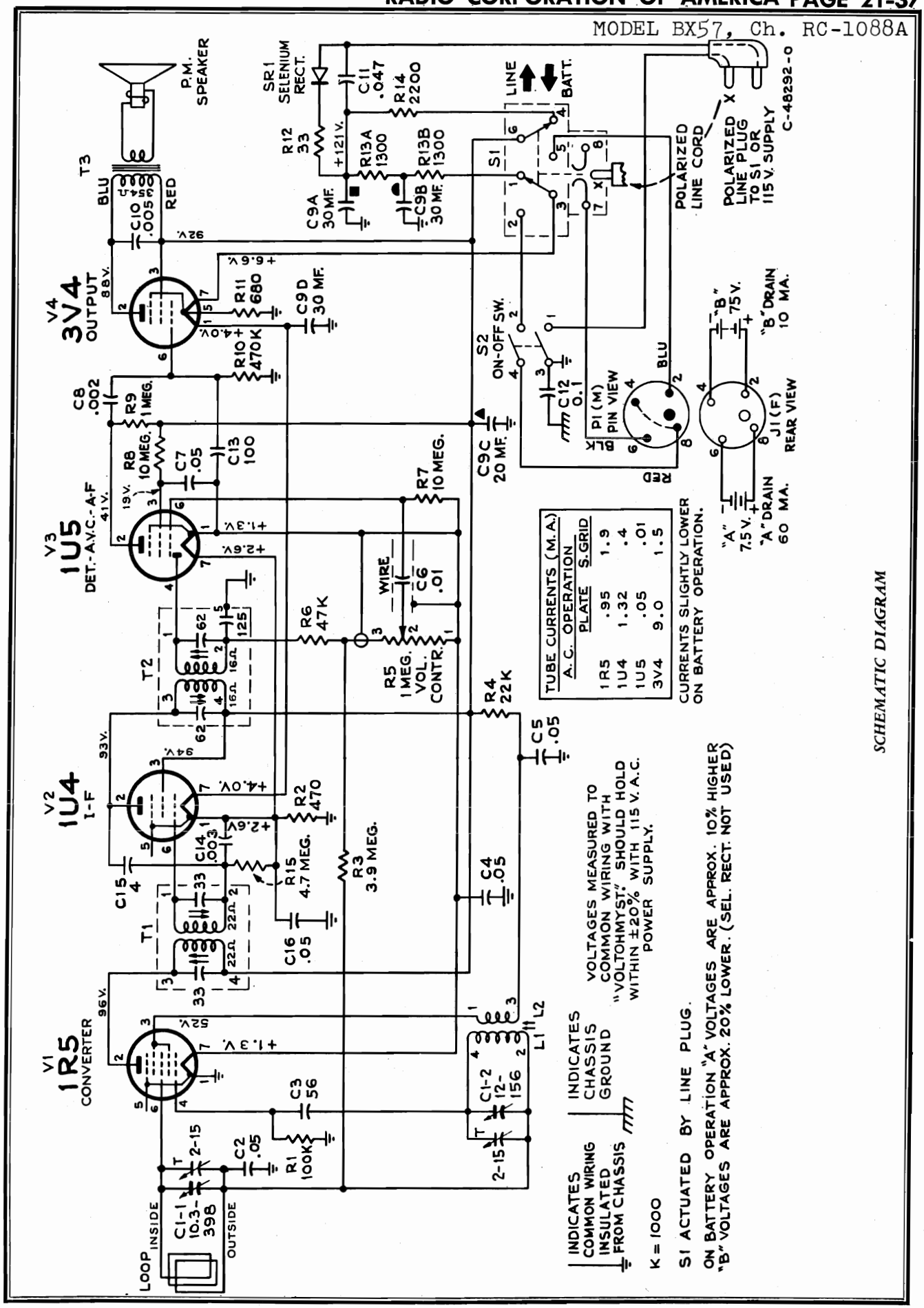

SCHEMATIC DIAGRAM

©John F. Rider

Compliments of www.nucow.com

MODEL BX57,
Ch. RC-1088A

Replacement Parts

STOCK No.	DESCRIPTION
	CHASSIS ASSEMBLIES RC 1088A
75149	Capacitor—Variable tuning capacitor C1-1, C1-2
73153	Capacitor—Ceramic, 4 mmf. C15
39622	Capacitor—Mica, 56 mmf. C3
39628	Capacitor—Mica, 100 mmf. C13
74774	Capacitor—Electrolytic, comprising 2 sections of 30 mfd., 150 volts, 1 section of 20 mfd., 150 volts and 1 section of 30 mfd., 25 volts C9A, C9B, C9C, C9D
72315	Capacitor—Tubular, paper, .002 mfd., 200 volts C8
73961	Capacitor—Tubular, paper, .003 mfd., 200 volts C14
73920	Capacitor—Tubular, paper, .005 mfd., 400 volts C10
73561	Capacitor—Tubular, paper, .01 mfd., 400 volts C6
75071	Capacitor—Tubular, moulded paper, .047 mfd., 400 volts C11
73553	Capacitor—Tubular, paper, .05 mfd., 400 volts C2, C4 C5, C7, C16
70617	Capacitor—Tubular, paper, 0.1 mfd., 400 volts C12
73935	Clip—Mounting clip for I.F. transformer
74405	Coil—Oscillator coil L1, L2
73275	Connector—5 contact male connector for battery cable
73125	Control—Volume control and power switch R5, S2
71457	Cord—Power cord and plug
†72953	Cord—Drive cord (approx. 40" overall length req'd)
72283	Grommet—Rubber grommet to mount tuning capacitor
74838	Grommet—Power cord strain relief grommet (1 set)
74776	Indicator—Station selector indicator
18469	Plate—Mounting plate for electrolytic capacitor
72602	Pulley—Drive cord pulley
74322	Rectifier—Selenium rectifier SR1
73237	Resistor—Wire wound (fuse type) 33 ohms R12
75148	Resistor—Ceramic, 2600 ohms, tapped at 1300 ohms, 10 watts R13
	Resistors—Fixed, composition:-
	470 ohms, ±20%, ½ watt R2
	680 ohms, ±20%, ½ watt R11
	2200 ohms, ±10%, ½ watt R14
	22,000 ohms, ±20%, ½ watt R4
	47,000 ohms, ±20%, ½ watt R6
	100,000 ohms, ±20%, ½ watt R1
	470,000 ohms, ±20%, ½ watt R10
	1 megohm, ±20%, ½ watt R9
	3.9 megohm, ±10%, ½ watt R3
	4.7 megohm, ±20%, ½ watt R15
	10 megohm, ±20%, ½ watt R7, R8

STOCK No.	DESCRIPTION
74773	Shaft—Tuning knob shaft
73103	Shield—Tube shield for 1U5 tube
73117	Socket—Tube socket, miniature
74038	Spring—Drive cord tension spring
71039	Switch—"Line-Battery" change switch S1
73129	Transformer—First I.F. transformer T1
73130	Transformer—Second I.F. transformer T2
71047	Transformer—Output transformer T3
33726	Washer—"C" washer for tuning knob shaft
	SPEAKER ASSEMBLIES 92577-3
74165	Speaker—4" P.M. speaker complete with cone and voice coil
	MISCELLANEOUS
75080	Back—Cabinet back complete with loop
74787	Board—Terminal board—2 contact
Y2227	Cabinet—Cabinet front including corners and link caps—less dial and plate
75156	Cap—Carrying handle link cap (2 required)
74339	Catch—Cabinet back catch (part of cabinet front)
74734	Clip—Spring clip for knob
74792	Clip—Striking clip for catch (part of cabinet back) (2 required)
75153	Cover—Cabinet corner cover—L.H.
75154	Cover—Cabinet corner cover—R.H.
75157	Dial—Metal dial scale and bezel
74782	Emblem—"RCA Victor" emblem
75150	Handle—Carrying handle
74790	Hinge—Cabinet hinge (2 required)
74781	Knob—Tuning or volume control and power switch knob
75151	Link—Link for carrying handle (2 required)
75152	Loop—Antenna loop winding
74788	Nut—Speed nut to mount terminal board
73203	Nut—Speed nut to fasten dial, corner covers, decorative plate or link caps
74783	Plate—Decorative plate (satin finish) for cabinet (above dial)
75448	Rivet—Bevel pointed rivet for handle (2 required)
75435	Screen—Crinoline screen for speaker grille
74301	Screw—No. 8-32 x ⅜" pan head cross recessed screw for chassis mounting (2 required)
74791	Screw—No. 4 x 5/16" pan head cross recessed screw to fasten catch to cabinet front

† Stock No. 72953 is a reel which contains 250 ft. of cord.

To Remove Cabinet Back

Disconnect the loop antenna leads. With the back fully open, grip the cabinet as illustrated. Insert a screwdriver under one hinge and pry the center of the hinge out of the opening in the cabinet while maintaining pressure on the back with the fingers and on the cabinet with the thumb. Repeat this procedure with the other hinge. Pull the back straight to the rear using both hands.

To Remove Hinges

Remove back from cabinet as described above. Spread the hinge apart to remove it from the cabinet back.

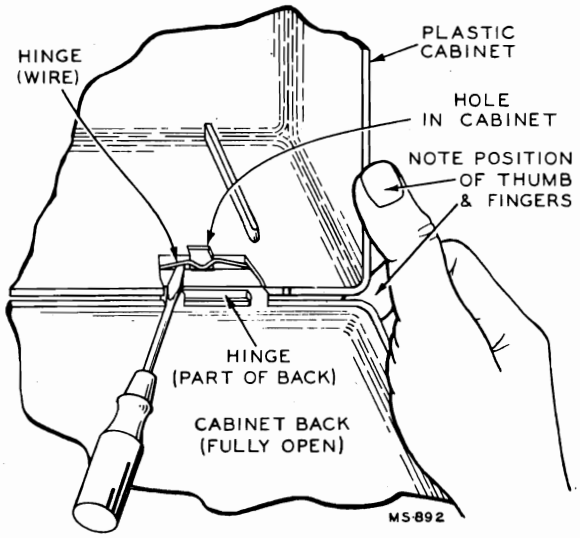

Removal of Cabinet Back

©John F. Rider

Compliments of www.nucow.com

MODELS X551, Ch. RC-1089B;
X552, Ch. RC-1089C

X551
Maroon

X552
Ivory

Specifications

Tuning Range ..... 540-1600 kc

Intermediate Frequency ..... 455 kc

Tube Complement

(1) RCA 12BE6 ..... Converter
(2) RCA 12BA6 ..... I-F Amplifier
(3) RCA 12AV6 ..... Det.—A.V.C.—A-F Amp.
(4) RCA 50L6GT ..... Output
(5) RCA 35W4 ..... Rectifier

Power Supply Rating

115 volts a.c., 50 to 60 cycles or d.c. ..... 30 watts

Dial Lamps (2) ..... type 47, 6-8 volts, .15 amp.

Power Output

Undistorted ..... 1.25 watts
Maximum ..... 1.5 watts

Loudspeaker (92577-1 or 92577-7)

Size and type ..... 4 in. PM
Voice coil impedance ..... 3.2 ohms at 400 cycles

Cabinet Dimensions

Height ... 8⅝" Width ... 12¼" Depth ... 6"

Weight ..... 6 lbs.

Replacement Parts

Stock No.	DESCRIPTION
	CHASSIS ASSEMBLIES
	RC 1089B—Model X551
	RC 1089C—Model X552
75481	Back—Back cover and loop assembly (maroon) (Model X551)
75604	Back—Back cover and loop assembly (ivory) (Model X552)
75658	Bracket—Lamp bracket
75484	Capacitor—Variable tuning capacitor C1-1, C1-2
39624	Capacitor—Mica, 68 mmf. C2
39632	Capacitor—Mica, 150 mmf. C12
39642	Capacitor—Mica, 390 mmf. C6
73500	Capacitor—Electrolytic comprising 1 section of 50 mfd., 150 volts and 1 section of 30 mfd., 150 volts C9A, C9B
73920	Capacitor—Tubular, paper, .005 mfd., 400 volts .. C4, C7
73562	Capacitor—Tubular, paper, .02 mfd., 400 volts C5
70613	Capacitor—Tubular, paper, .03 mfd., 400 volts C8
73553	Capacitor—Tubular, paper, .05 mfd., 400 volts .. C3, C11
73551	Capacitor—Tubular, paper, 0.1 mfd., 400 volts C10
73935	Clip—Mounting clip for i-f transformer
75485	Coil—Oscillator coil complete with adjustable core L1, L2
75482	Connector—Phono input connector less mounting bracket J1
75483	Control—Volume control and power switch R5, S1
70392	Cord—Power cord and plug
72283	Grommet—Rubber grommet for variable tuning capacitor (3 req'd)
74838	Grommet—Power cord strain relief grommets (1 set)
	Resistor—Fixed, composition:—
	47 ohms, ±20%, ½ watt R13
	100 ohms, ±20%, ½ watt R3
	150 ohms, ±20%, ½ watt R9
	1200 ohms, ±10%, 1 watt R10
	22,000 ohms, ±20%, ½ watt R1
	47,000 ohms, ±20%, ½ watt R12
	220,000 ohms, ±20%, ½ watt R7
	470,000 ohms, ±20%, ½ watt R8
	1 megohm, ±20%, ½ watt R2
	3.3 megohm, ±20%, ½ watt R4
	4.7 megohm, ±20%, ½ watt R6

Stock No.	DESCRIPTION
73584	Shield—Tube shield
73117	Socket—Tube socket, 7 pin, miniature
70827	Socket—Tube socket, octal
74697	Socket—Pilot lamp socket
75486	Transformer—First I-F transformer complete with adjustable cores T1
75487	Transformer—Second I-F transformer complete with adjustable cores T2
75488	Transformer—Output transformer T3
	SPEAKER ASSEMBLIES
	92577-1 or 92577-7
74165	Speaker—4" P.M. speaker complete with cone and voice coil
	MISCELLANEOUS
Y2231	Cabinet—Plastic cabinet—maroon—complete with grille screen, dial markings, top and bottom decorative strips, feet and "Phono" decal (Model X551)
Y2261	Cabinet—Plastic cabinet—ivory—complete with grille screen, dial markings, top and bottom decorative strips, feet and "Phono" decal (Model X552)
75659	Cap—Pilot lamp cap
75492	Decal—"Phono" decal
74782	Emblem—"RCA Victor" emblem
75495	Foot—Cabinet foot—(2 req'd)
75493	Knob—Tuning control knob—maroon—(Model X551)
75494	Knob—Volume control and power switch knob—maroon (Model X551)
75605	Knob—Volume control and power switch knob—ivory (Model X552)
75606	Knob—Tuning control knob—ivory— (Model X552)
31480	Lamp—Pilot lamp—Mazda 47
74336	Nut—Spring nut to attach top decorative strip to cabinet (2 req'd) or bottom decorative strip to cabinet (1 req'd)
74340	Nut—Speed nut to attach foot
75489	Screen—Grille screen
74734	Spring—Retaining spring for knob
75490	Strip—Decorative strip (gold) for cabinet top
75491	Strip—Decorative strip (gold) for cabinet front bottom

©John F. Rider

Compliments of www.nucow.com

MODELS X551, Ch. RC-1089B;
X552, Ch. RC-1089C

Alignment Procedure

Test-Oscillator—For all alignment operations, connect the low side of the test-oscillator to the receiver chassis, and keep the oscillator output as low as possible to avoid a-v-c action.

On a.c. operation an isolation transformer (115 v./115 v.) may be necessary for the receiver if the test oscillator is also a.c. operated.

Lead Dress

1. Dress all capacitors down against chassis.
2. Connect outside foil of all capacitors as indicated in schematic diagram.
3. Locate C9 in its mounting clip so that it butts against chassis.
4. Dress power cord leads away from R11.

Attachment of Record Player

The audio output cable of the record player should be terminated with a pin plug.

Plug the cable into the receptacle which is accessible through the side of the cabinet.

Insertion of the cable plug into the receptacle removes radio signal from the volume control. The record player cable must be removed from the receptacle to permit radio operation.

Steps	Connect the high side of test-oscillator to—	Tune test-osc. to—	Turn radio dial to—	Adjust the following for max. output
1	12BA6 I-F grid through .01 mfd. capacitor	455 kc	Quiet-point 1600 kc end of dial	T2 (top and bottom) 2nd I-F trans.
2	Stator of C1-2 through .01 mfd.			T1 (top and bottom) 1st I-F trans.
3	Short wire placed near loop to radiate signal	1620 kc	Min. cap.	osc. trimmer
4		1400 kc	1400 kc signal	ant. trimmer
5		600 kc	600 kc signal	L2 (osc.) Rock gang
6		Repeat steps 3, 4 and 5.		

POWER SUPPLY POLARITY.—For operation on d.c., the power plug must be inserted in the outlet for correct polarity. If the set does not function, reverse the plug. On a.c., reversal of the plug may reduce hum.

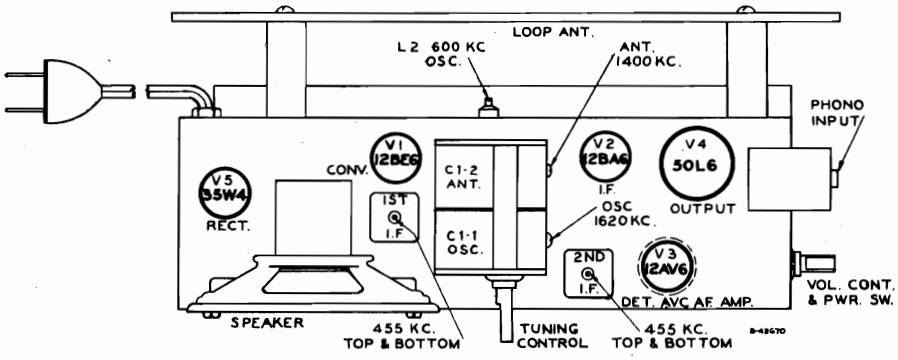

Tube and Trimmer Locations

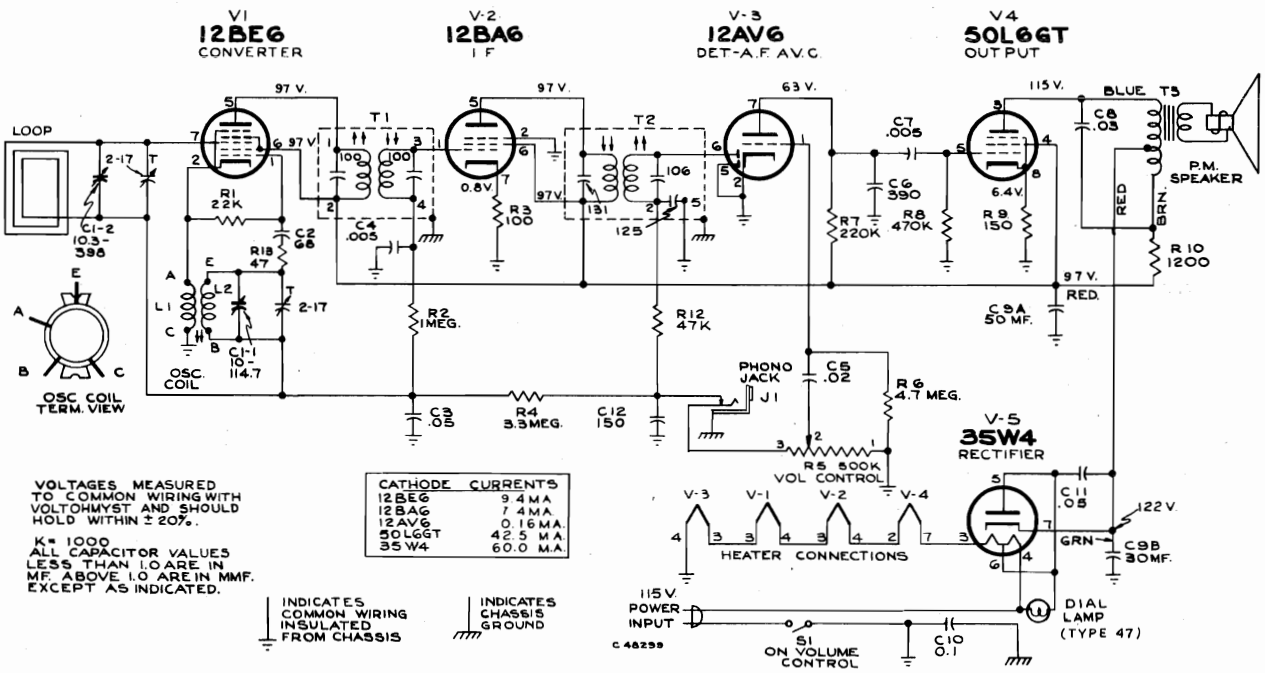

VOLTAGES MEASURED TO COMMON WIRING WITH VOLTOHMYST AND SHOULD HOLD WITHIN ± 20%.

K= 1000
ALL CAPACITOR VALUES LESS THAN 1.0 ARE IN MF. ABOVE 1.0 ARE IN MMF. EXCEPT AS INDICATED.

CATHODE CURRENTS	
12BE6	9.4 MA
12BA6	7.4 MA
12AV6	0.16 MA.
50L6GT	42.5 MA.
35W4	60.0 MA.

INDICATES COMMON WIRING INSULATED FROM CHASSIS

INDICATES CHASSIS GROUND

Schematic Circuit Diagram

©John F. Rider

Compliments of www.nucow.com

MODEL X711,
Ch. RC-1070A

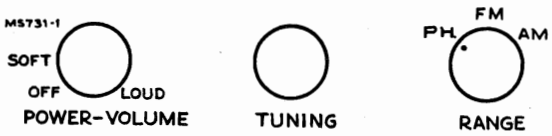

Controls

Specifications

Tuning Ranges

Standard Broadcast (AM) ..... 540-1,600 kc.
Frequency Modulation (FM) ..... 88-108 mc.

Intermediate Frequencies ..... AM—455 kc., FM—10.7 mc.

Tube Complement

(1) RCA 19J6 .....Mixer and Oscillator
(2) RCA 6BJ6 ..... I. F. Amplifier
(3) RCA 12AU6 .....Driver
(4) RCA 12AL5 .....Ratio Detector
(5) RCA 6AQ6 ..... AM Det.—A. F. Amp.
(6) RCA 35C5 ..... Output
(7) RCA 35W4 ..... Rectifier

Dial Lamp .....Type No. 47, 6-8 volts, 0.15 amp.

Loudspeaker

Type 92572-4W ..... 5 inch P.M.
Voice coil impedance ..... 3.2 ohms at 400 cycles

Tuning Drive Ratio ..... 11½:1 (5¾ turns of knob)

Power Supply Rating

115 volts d.c. or 50 to 60 cycles a.c. ..... 30 watts

Power Output

Maximum ..... 1.65 watts
Undistorted ..... 1.0 watt

Cabinet Dimensions

Height.....8⅝ in. Width.....12⅞ in. Depth.....7 5/16 in.

Power Supply:

This instrument will operate on 115 volts d.c. or 50 to 60 cycles a.c.

If the receiver does not operate on d.c., reverse the power cord. On a.c., reversal of the cord may reduce hum or improve FM reception.

Antennas:

These receivers have built-in antennas for standard broadcast (AM) and frequency modulation (FM) reception.

Under average conditions these antennas will provide satisfactory reception—however provision is made for the use of an external antenna for FM reception if desired.

To use external FM antenna:

1. Remove the wire from under the No. 2 terminal screw of the antenna terminal board. The bare end of this wire should be taped to prevent contact with the antenna terminal screws.
2. Connect the transmission line from an external FM dipole antenna to the No. 1 and No. 2 terminals of the antenna terminal board.

To use built-in FM antenna:

1. The wire extending thru the back of the cabinet must be connected to No. 2 terminal of the antenna terminal board.
2. The power cord should be fully extended and must not be coiled or hanked up.
3. Reversal of the line cord plug may improve reception.

DO NOT USE EXTERNAL GROUND.

CAUTION:

THE CHASSIS IS CONNECTED TO ONE SIDE OF THE POWER SUPPLY. Use caution to prevent contact with pipes, radiators, etc., when servicing with chassis removed from cabinet.

Control Knobs:

DO NOT ATTEMPT TO REMOVE THE CONTROL KNOBS FROM THE CABINET. The knobs have spring retainers on the inside of the cabinet to prevent their removal. The retainers are accessible only after the chassis has been removed from the cabinet.

Removal of Chassis:

1. Remove the four screws at the corners of the back cover—pull back cover off carefully—the power cord plug and socket at the bottom right-hand corner will pull apart but the antenna leads remain connected.
2. Unhook the dial cord from the pointer.
3. Remove the four screws which hold the chassis to the cabinet (two at sides of chassis base and two on dial cord pulley brackets above the chassis base).
4. Pull the chassis to the rear—the knobs will be retained with the cabinet.

If removal of the chassis is not necessary when servicing, the back cover may be placed on the supports molded into the upper part of the cabinet.

©John F. Rider

Compliments of www.nucow.com

MODEL X711, Ch. RC-1070A

Alignment Procedure

CORRECT ALIGNMENT OF THE FM BAND REQUIRES THAT THE AM BAND BE ALIGNED FIRST

Output Indicators:

An RCA VoltOhmyst or equivalent meter is necessary for measuring developed d-c voltage during FM alignment. Connections are specified in the alignment tabulation. An output meter is also necessary to indicate minimum audio output during FM Ratio Detector alignment. Connect the output meter across the speaker voice coil.

The RCA VoltOhymst can also be used as an AM alignment indicator, either to measure audio output or to measure a-v-c voltage.

When audio output is being measured the volume control should be turned to maximum.

Signal Generator:

For all alignment operations except as stated in the tabulation connect the low side of the signal generator to the receiver chassis. The output should be adjusted to provide accurate resonance indication at all times. If output measurement is used for AM alignment the output of the signal generator should be kept as low as possible to avoid a-v-c action.

CAUTION:

The chassis is connected to one side of the power supply. On a.c operation it is recommended that an isolation transformer (115 v./115 v.) be used for the receiver when servicing.

Oscilloscope Alignment:

The FM I. F. alignment may be checked using a sweep generator and an oscilloscope. Shunt terminals B and C of T3 with a 1,200 ohm resistor. Connect the high side of the oscilloscope to terminal C of T3 in series with a diode probe. Apply the output of the sweep generator (10.7 mc with ±250 kc. sweep) to pin No. 1 of V2 (6BJ6) in series with .01 mf. Low side of the oscilloscope and sweep generator to chassis. This will show the response of T2.

To check the combined response of T1 and T2; connect the sweep generator to the antenna terminal board—high side to No. 2 terminal in series with 300 ohms and low side to No. 1 terminal. Oscilloscope connections as previously connected.

To check the ratio detector response; connect the high side of the oscilloscope direct to terminal No. 5 of S1-1 rear, low side to chassis, apply the output of the sweep generator to pin No. 1 of V3 (12AU6) in series with .01 mf. Driver plate circuit connected for normal operation (1200 ohm resistor removed). **Note:** It is difficult to observe marker signals in this step—center frequency and sweep width should be previously observed.

Alignment Indicator:

The dial and dial back plate are not attached to the chassis. During alignment a substitute frequency indication must be used. We suggest attaching a paper clip to the dial drive cord so that its movement may be measured—refer to the "Dial Scale" illustration on page 5.

CRITICAL LEAD DRESS

1. All connections in the mixer-oscillator circuit are extremely critical both in regard to lead length and lead dress. Do not disturb unless necessary—make careful notation before servicing if it becomes necessary to disturb this wiring.
2. The ground lead from pin No. 2 of V3 (12AU6 Driver) is critical in length and must be dressed down against chassis.
3. Dress audio coupling capacitor C23 away from output transformer.
4. Dress diode filter unit away from alignment hole in T-2.
5. Dress grid lead of V3 (pin 1 of 12AU6) against chassis apron.
6. Dress plate lead of V1 (pin No. 2 of 19J6) against chassis.
7. Dress loop antenna leads so as to prevent contact with external antenna terminal board.
8. All ground connections to chassis should be restored to the original places of connection if disturbed.
9. Dress capacitor C13 down close to range switch so as to clear the projection on the bottom of the cabinet.
10. The FM ant. and osc. coils must be cemented to the coil support to prevent microphonic howl on FM. Amphenol No. 912 cement is recommended for this purpose. Amphenol No. 916 solvent is recommended as solvent if it becomes necessary to loosen the windings.

AM Alignment

RANGE SWITCH IN AM POSITION

Steps	Connect high side of sig. gen. to—	Sig. gen. output	Turn radio dial to—	Adjust for peak output
1	AM ant. section (C3) of tuning cond. in series with .01 mfd.	455 kc.	Quiet point at low freq. end.	AM windings.† T2 bottom core (sec.). T2 top core (pri.).
2				AM windings.† T1 top core (sec.). T1 bottom core (pri.).
3	Short wire placed near loop antenna for radiated signal.	1620 kc.	Extreme high frequency end.	C12 osc.
4		1400 kc.	1400 kc.	C4 ant.
5		600 kc.	600 kc.	L4 osc. (Rock gang.)
6	Repeat Steps 3, 4 and 5.			

†Use alternate loading.

Alternate loading involves the use of a 10,000 ohm resistor to load the AM plate winding while the AM grid winding of the SAME TRANSFORMER is being peaked. Then the grid winding is loaded with the resistor while the plate winding is peaked. Only one winding is loaded at any one time. Remove the 10,000 ohm resistor after T2 and T1 have been aligned.

Oscillator frequency is above signal frequency on both AM and FM.

FM Alignment

RANGE SWITCH IN FM POSITION—VOLUME CONTROL MAXIMUM

Steps	Connect high side of sig. gen. to—	Sig. gen. output	Turn radio dial to—	Adjust for peak output
1	Connect the d-c probe of a VoltOhmyst to the negative lead of the 2 mfd. capacitor C32 and the common lead to chassis. Adjust sig. gen. output to provide approx.—3 v. indication during alignment.			
2	Pin 1 of 12AU6 in series with .01 mfd.	10.7 mc. modulated 30% 400 cycles AM.	Max. capacity (fully meshed).	T3 top core for max. d-c voltage across C32. T3 bottom core for min. audio output.*
3	No. 2 ant. term in series with a 300 ohm resistor. Connect low side to No. 1 terminal. (Remove ant. lead from No. 2 term.)			FM Windings.†† T2 top core (sec.). T2 bottom core (pri.).
4				FM Windings.†† T1 top core (sec.). T1 bottom core (pri.).
5		106 mc.	106 mc.	L1 osc.** C15 ant.
6		90 mc.	90 mc.	L5 ant.** (Rock gang.)
7	Repeat Steps 5 and 6 until further adjustment does not improve calibration.			

* Two or more points may be found which lower the audio output. At the correct point the minimum audio output is approached rapidly and is much lower than at any incorrect point.

†† Align T2 and T1 by means of alternate loading as explained under AM alignment. Use a 680 ohm resistor instead of a 10,000 ohm resistor and load the FM windings.

** L1 and L5 are adjustable by increasing or decreasing the spacing between turns.

©John F. Rider

Compliments of www.nucow.com

MODEL X711,
Ch. RC-1070A

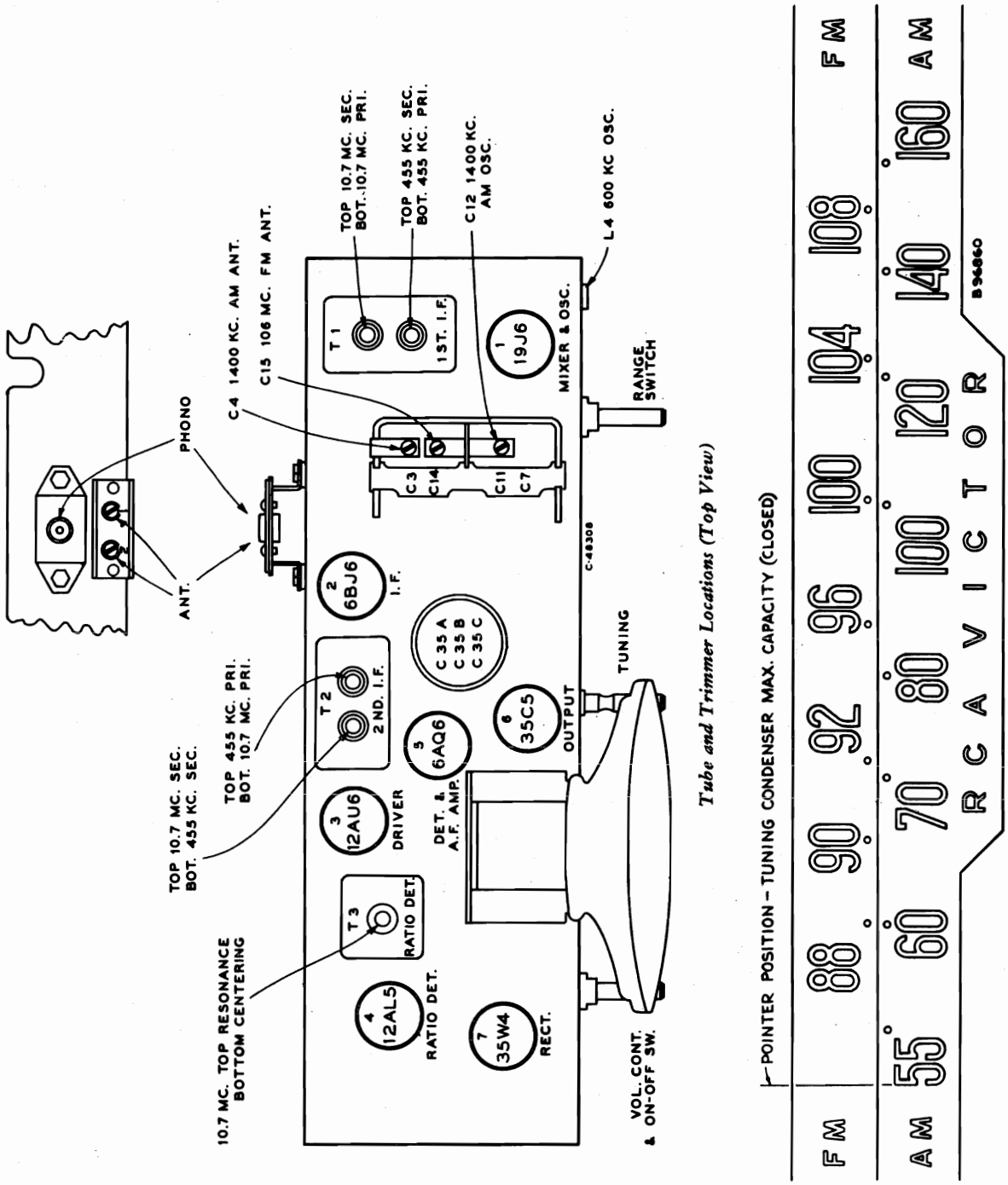

Tube and Trimmer Locations (Top View)

Dial Scale

The dial scale drawing shown is a full size reproduction. It can be used as a reference in alignment procedure.

©John F. Rider

Compliments of www.nucow.com

MODEL X711,
Ch. RC-1070A

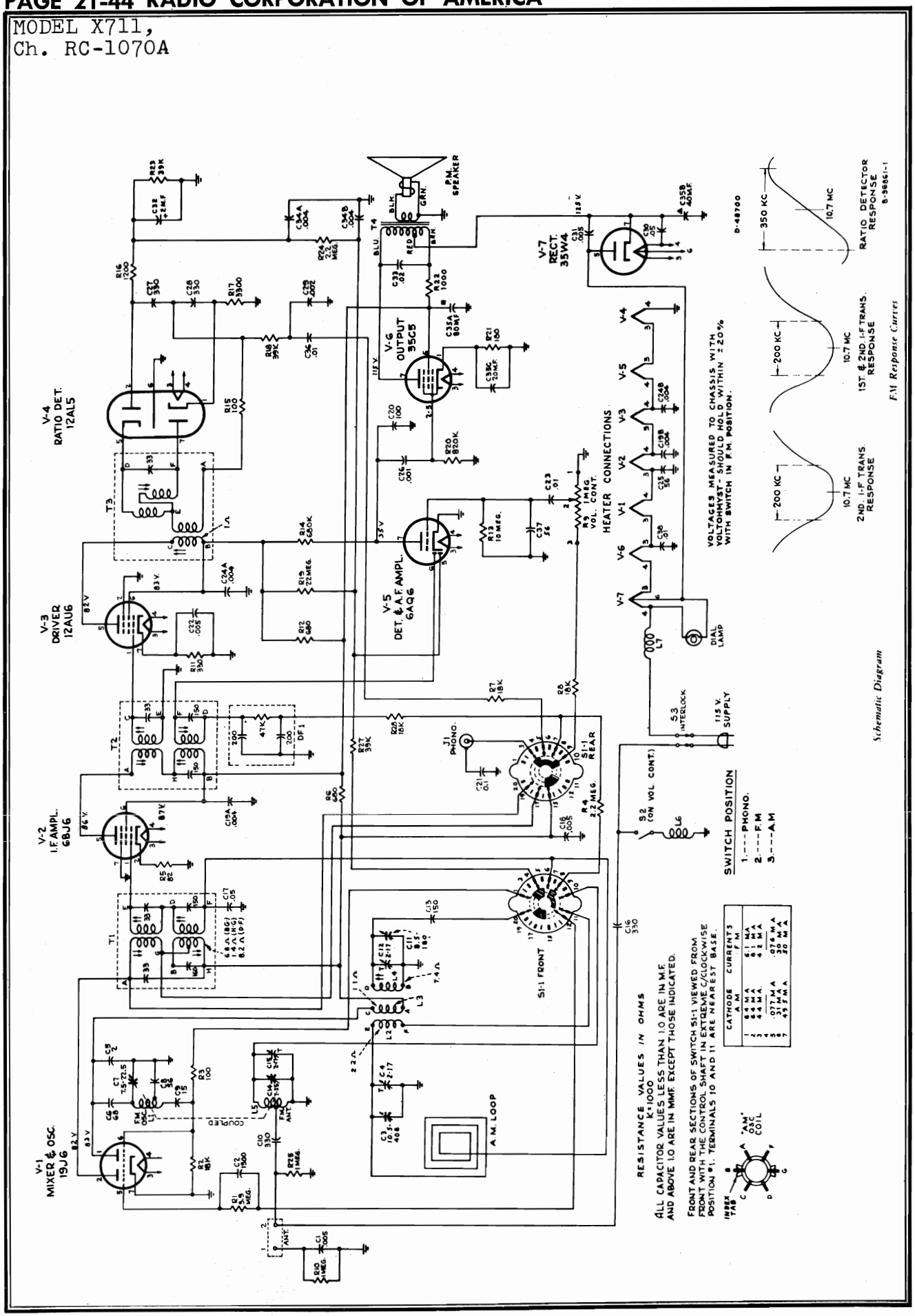

©John F. Rider

Compliments of www.nucow.com

MODEL X711,
Ch. RC-1070A

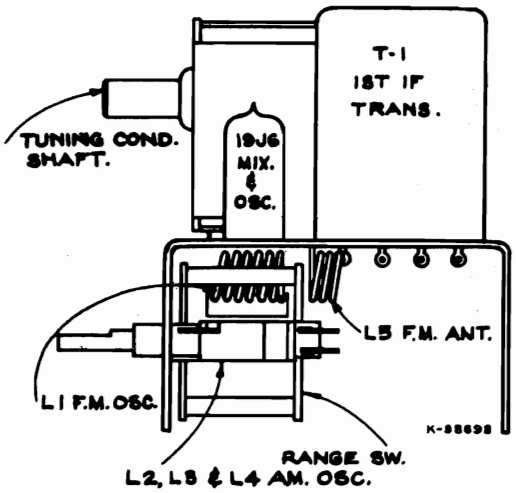

Ant. and Osc. Coil Locations (Side View)

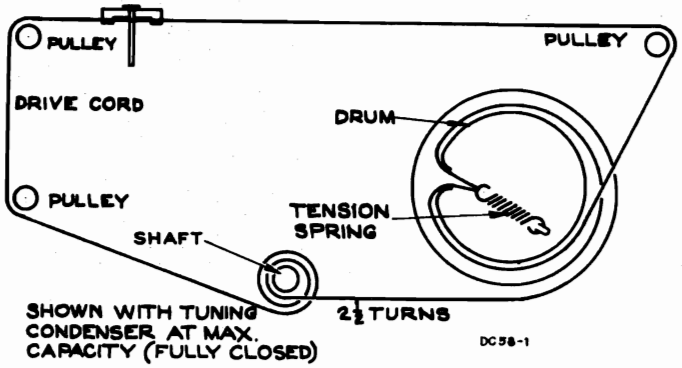

Dial Indicator and Drive Mechanism

Replacement Parts

Stock No.	DESCRIPTION
	CHASSIS ASSEMBLIES RC 1070A
73973	Capacitor—Variable tuning capacitor (C3, C4, C7, C11, C12, C14 C15)
73866	Capacitor—Ceramic, 2 mmf. (C5)
39044	Capacitor—Ceramic, 15 mmf. (C9)
73867	Capacitor—Ceramic, 56 mmf. (C8)
73499	Capacitor—Ceramic, 56 mmf. (C25, C37)
75612	Capacitor—Ceramic, 68 mmf. (C6)
39628	Capacitor—Mica, 100 mmf. (C20)
44202	Capacitor—Ceramic, 150 mmf. (C13)
75792	Capacitor—Ceramic, 330 mmf. (C10)
39640	Capacitor—Mica, 330 mmf. (C16, C27, C28)
71501	Capacitor—Ceramic, 1500 mmf. (C2)
74009	Capacitor—Ceramic, dual 4000 mmf. (C19A, C19B, C24A, C24B, C34A, C34B)
73473	Capacitor—Ceramic, 5000 mmf. (C1, C18, C31)
73747	Capacitor—Electrolytic, 2 mfd, 50 volts (C32)
73975	Capacitor—Electrolytic, comprising 1 section of 80 mfd, 150 volts, 1 section of 40 mfd, 150 volts and 1 section of 20 mfd, 25 volts (C35A, C35B, C35C)
73186	Capacitor—Tubular, paper, .001 mfd, 400 volts (C26)
73750	Capacitor—Tubular, paper, .002 mfd, 200 volts (C29)
71926	Capacitor—Tubular, paper, .005 mfd, 200 volts (C22)
71923	Capacitor—Tubular, paper, .01 mfd, 200 volts (C23, C36, C38)
74010	Capacitor—Tubular, paper, .02 mfd, 400 volts (C33)
73553	Capacitor—Tubular, paper, .05 mfd, 400 volts (C17, C30)
73551	Capacitor—Tubular, paper, 0.1 mfd, 400 volts (C21)
73744	Coil—Oscillator coil—A-M (L2, L3, L4)
74012	Coil—Oscillator coil—F-M (L1)
74013	Coil—Antenna coil—F-M (L5)
	Coil—Line choke coil (#18 gauge solid wire, 1/32" plastic insulation, standard hook-up wire, 10 turns, close wind) (L6, L7)
73981	Connector—2 contact male connector for power input
38406	Control—Volume control and power switch (R9, S2)
†72953	Cord—Drive cord (approx. 50" overall length required)
74011	Filter—Diode filter comprising 2 sections of 200 mmf. and 1 section of 47,000 ohms (DF-1)
72283	Grommet—Rubber grommet for mounting tuning capacitor (4 req'd)
	Resistors—Fixed, composition:—
	82 ohms, ±10%, ½ watt (R5)
	100 ohms, ±5%, ½ watt (R15)
	100 ohms, ±20%, ½ watt (R3)
	180 ohms, ±10%, ½ watt (R21)
	330 ohms, ±10%, ½ watt (R11)
	680 ohms, ±20%, ½ watt (R6, R12)
	1000 ohms, ±10%, 1 watt (R22)
	1200 ohms, ±5%, ½ watt (R16)
	3300 ohms, ±5%, ½ watt (R17)
	18,000 ohms, ±10%, ½ watt (R2, R7, R8, R28)
	39,000 ohms, ±5%, ½ watt (R23)
	39,000 ohms, ±10%, ½ watt (R18, R27)
	680,000 ohms, ±20%, ½ watt (R14)
	820,000 ohms, ±10%, ½ watt (R20)
	1 megohm, ±20%, ½ watt (R10, R25)
	2.2 megohm, ±20%, ½ watt (R4, R24)
	3.9 megohm, ±10%, ½ watt (R1)
	10 megohm, ±20%, ½ watt (R13)
	22 megohm, ±20%, ½ watt (R19)
73978	Shaft—Tuning knob shaft
74179	Socket—Tube socket, 7 pin, miniature for V1
73117	Socket—Tube socket, 7 pin, miniature for V2, V3, V4, V5, V6, V7
75790	Socket—Phono input socket and terminal board assembly (J1)
74014	Socket—Dial lamp socket
74038	Spring—Drive cord spring
73979	Support—Dial drive cord pulley support complete with two (2) pulleys—L. H.
73980	Support—Dial drive cord pulley support complete with pulley—R. H.
75789	Switch—Range switch (S1-1)
73745	Transformer—First I-F transformer—dual (T1)
73974	Transformer—Second I-F transformer—dual (T2)
73743	Transformer—Ratio detector transformer (T3)
73976	Transformer—Output transformer (T4)
33726	Washer—"C" washer for tuning knob shaft
75791	Washer—Insulating washer (shoulder type) for mounting phono input socket and terminal board assembly (2 req'd)
73332	Washer—Insulating washer (flat) for mounting phono input socket and terminal board assembly (2 req'd)
	SPEAKER ASSEMBLIES 92572-4
73900	Speaker—5" speaker complete with cone and voice coil
	MISCELLANEOUS
75793	Back—Cabinet back complete with power cord, connector and loop
75797	Bezel—Cabinet bezel and grille cloth assembly less "RCA Victor" emblem
Y2275	Cabinet—Maroon plastic cabinet
75795	Dial—Polystyrene dial scale
74782	Emblem—"RCA Victor" emblem
75794	Knob—Range switch knob—maroon
75885	Knob—Tuning control or volume control knob—maroon
31480	Lamp—Dial lamp—Mazda #47
72765	Nut—Speed nut for mounting dial
73989	Plate—Dial back plate
73991	Pointer—Station selector pointer
73992	Retainer—Knob retainer (knob to cabinet)
14270	Spring—Retaining spring for knobs (knob to shaft)

† Stock No. 72953 is a reel containing 250 feet of cord.

©John F. Rider

Compliments of www.nucow.com

MODEL 9W106,
Ch. RC-622

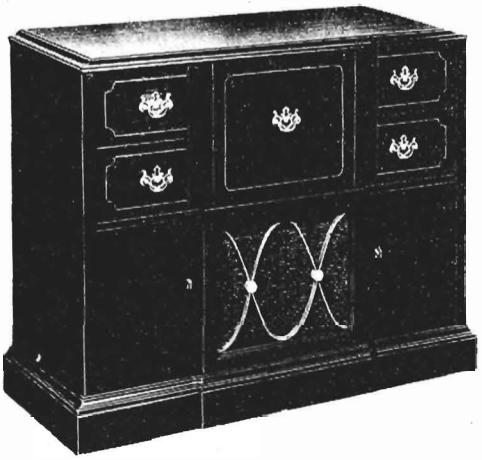

Antennas

This receiver has built-in antenna for standard broadcast (AM) and frequency modulation (FM) reception.

Provision is made for the use of an external antenna for FM reception if desired. To use external FM antenna — remove the built-in FM antenna lead from the "FM" terminals of the antenna terminal board. Connect the transmission line of an external FM dipole antenna to these two "FM" terminals.

FOR RECORD CHANGER SERVICE INFORMATION REFER TO RP-168 SERIES SERVICE DATA AND RP-178 SERIES SERVICE DATA.

Tuning Range

Standard Broadcast (AM) ..... 540-1,600 kc.
Frequency Modulation (FM)..... 88-108 mc.
Intermediate Frequencies..... AM—455 kc., FM—10.7 mc.

Tube Complement

(1) RCA 6BJ6..... R-F Amplifier
(2) RCA 6J6..... Mixer and Oscillator
(3) RCA 6BA6..... I-F Amplifier
(4) RCA 6AU6..... Driver
(5) RCA 6AL5 ..... Ratio Detector
(6) RCA 6AV6..... AM Det.—AVC—A-F Amplifier
(7) RCA 6AV6..... Ph. Inv.
(8) RCA 6V6GT..... Output
(9) RCA 6V6GT..... Output
(10) RCA 6X5GT ..... Rectifier

Dial Lamps (2)..... Type No. 51, 6-8 volts, 0.2 amp.
Jewel Lamp ..... Type No. 51, 6-8 volts, 0.2 amp.

Tuning Drive Ratio..... 18:1 (9 turns of knob)

Power Supply Rating..... 115 volts, 60 cycles, 90 watts

Loudspeaker (92569-6W)

Size and type..... 12 in. PM
Voice coil impedance..... 3.2 ohms at 400 cycles

Power Output

(Radio) Undistorted 5 watts..... Maximum 6.4 watts
(Phono.) Undistorted 8 watts..... Maximum 9 watts

Cabinet Dimensions

Height 31½ in. **Width 39¾ in.** **Depth 17½ in.**

Record Changer (RP-168)

Turntable speed..... 45 r.p.m.
Record capacity..... Up to 10 fine groove records
Pickup ..... Crystal (medium output)

Record Changer (RP-178)

Turntable speed..... 78 r.p.m.
Record capacity..... Twelve 10-in. or ten 12-in.
Pickup..... Crystal (standard output)

Circuit Description

This instrument has a ten-tube (including rectifier) chassis which is very similar to those used in other RCA Victor radio-phonograph combinations designed for AM-FM reception.

The selector switch has five functions:

(1) Selection of tuning range.
(2) Selection and distribution of a.v.c. voltages.
(3) Application of B+ voltage to tubes V1, V2, V3 and V4.
(4) Selection of audio input applied to the volume control.
(5) Application of a.c. power to the record changer motors.

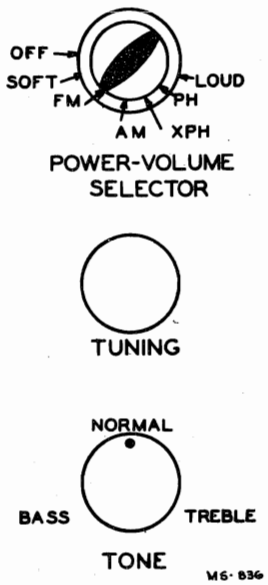

Operating Controls

©John F. Rider

Compliments of www.nucow.com

MODEL 9W106,
Ch. RC-622

CRITICAL LEAD DRESS
Model 9W106 — RC622

Note: The leads listed may not be critical in all receivers. However, by dressing the leads as specified, unusual difficulties will be minimized.

1. The plate lead of the **second** IF transformer should be dressed down against the chassis to obtain max. capacity between the lead and chassis. This lead is specified to be two inches long.
2. The "A" band RF transformer plate, and grid leads should be dressed so as to minimize coupling to the RF amplifier grid circuit, and kept close to chassis when possible.
3. The 2.2 meg. grid resistors connecting to the RF and mixer grids should have a minimum practicable amount of lead extending on the grid end. The leads should be cut off short on the grid end and long on the A.V.C. end.
4. The unshielded plate lead from the function switch to the 1st IF transformer should be dressed away from the switch wafer audio lugs as much as possible.
5. The ground strap between the RF shelf and chassis should be well soldered and kept as short as practicable. FM instability may be caused by having this ground strap too long, particularly when no input is connected to the FM antenna terminal.
6. The lead from the 2nd IF to the grid of the 6BA6 1st IF amplifier should be kept short, and dressed against the chassis as much as practicable.
7. The lead from the 2nd IF to the AM detector diode should be dressed to minimize coupling to the 6AV6 1st AF grid and kept close to chassis.
8. Leads from the volume control taps should be kept clear of all filament and output plate wires as in the wiring sample.
9. The loop cable when connected to the AM sec. gang stator should be dressed to have minimum capacity coupling to the stator lug on the RF section of gang condenser.
10. The oscillator coupling condenser C10 should be dressed to have minimum capacity to the mixer grid, Pin No. 5 on V2.
11. The shielding on the shielded lead from the volume control to the function switch should have the minimum practicable exposed wire at the function switch end.

Alignment Procedure

CORRECT ALIGNMENT OF THE FM BAND REQUIRES THAT THE AM BAND BE ALIGNED FIRST

Alignment Indicators:

An RCA VoltOhmyst or equivalent meter is necessary for measuring developed d-c voltage during FM alignment. Connections are specified in the alignment tabulation. An output meter is also necessary to indicate minimum audio output during FM Ratio Detector alignment. Connect the output meter across the speaker voice coil.

The RCA VoltOhmyst can also be used as an AM alignment indicator, either to measure audio output or to measure a-v-c voltage.

When audio output is being measured the volume control should be turned to maximum.

Signal Generator:

For all alignment operations connect the low side of the signal generator to the receiver chassis. The output should be adjusted to provide accurate resonance indication at all times. If output measurement is used for AM alignment the output of the signal generator should be kept as low as possible to avoid a-v-c action.

Oscilloscope Alignment:

The FM I-F alignment may be checked using a sweep generator and an oscilloscope. Shunt terminals B and C of T4 with a 1200 ohm resistor. Connect the high side of an oscilloscope to terminal C of T4 in series with a diode probe. Apply the output of the sweep generator (10.7 mc. with ±250 kc. sweep) to pin No. 1 of V3 (6BA6) in series with .01 mf. Low side of the oscilloscope and sweep generator to chassis. This will show the response of T3.

To check the combined response of T2 and T3: connect the sweep generator to the FM antenna terminals (remove FM antenna lead) in series with 300 ohms. **Note:** One FM terminal is grounded—it may be necessary to reverse the sweep generator connections. Oscilloscope connections remain as connected.

To check the ratio detector response: connect the high side of the oscilloscope direct to terminal No. 9 of S1, low side to chassis. Apply the output of the sweep generator to pin No. 1 of V4 (6AU6) in series with .01 mf. Driver plate circuit connected for normal operation (1200 ohm resistor removed). **Note:** It is difficult to observe marker signals in this step—center frequency and sweep width should be previously observed.

AM Alignment

RANGE SWITCH IN BC POSITION

Steps	Connect high side of sig. gen. to—	Sig. gen. output	Turn radio dial to—	Adjust for peak output
1	Pin No. 5 of V2 in series with .01 mfd.	455 kc.	Quiet point at low freq. end.	AM windings.† T3 bottom core (sec.). T3 top core (pri.).
2				AM windings.† T2 top core (sec.). T2 bottom core (pri.).
3	Short wire placed near loop for radiated signal	1400 kc.	1400 kc.	C1-2T (osc.). C1-5T (ant.). C1-4T (rf.).
4		600 kc.	600 kc.	L8 (osc.) with 10,000 ohms resistor from RF stator to gnd. (rocking gang)
5				L5 (RF) with the 10,000 ohms removed.
6	Repeat steps 3, 4 and 5 until no improvement in sensitivity is obtained.			

† Use alternate loading.

Alternate loading involves the use of a 47,000 ohm resistor to load the AM plate winding while the AM grid winding of the SAME TRANSFORMER is being peaked. Then the grid winding is loaded with the resistor while the plate winding is peaked. Only one winding is loaded at any one time. Remove the 47,000 ohm resistor after T3 and T2 have been aligned.

Oscillator frequency is above signal frequency on both AM and FM.

FM Alignment

RANGE SWITCH IN FM POSITION—VOLUME CONTROL MAXIMUM

Steps	Connect high side of sig. gen. to—	Sig. gen. output	Turn radio dial to—	Adjust for peak output
1	Connect the d-c probe of a VoltOhmyst to the negative lead of the 2 mfd. capacitor C42 and the common lead to chassis. Turn gang condenser to max. capacity (fully meshed). Volume Control max.			
2	Pin 1 of V4 6AU6 in series with 470 ohm resistor.	10.7 mc. modulated 30% 400 cycles AM (Approx. .05 volt).	Max. capacity (fully meshed).	T4 top core for max. d-c voltage across C42. T4 bottom core for min. audio output. *
3		10.7 mc. Adjust to provide about 4 volts indication on VoltOhmyst during alignment.		FM windings.†† T3 top core (sec.). T3 bottom core (pri.).
4				FM windings.†† T2 top core (sec.). T2 bottom core (pri.).
5	High and low side of signal gen. through two 120 ohm resistors. To ant. terminals.	90 mc.	90 mc.‡	L9 (osc.).**
6		106 mc.	106 mc.	C1-6T (ant.). C1-3T (rf.).
7		90 mc.	90 mc.	L1 (ant.).** L3 (rf.).**
8	Repeat steps 6 and 7 until no improvement in sensitivity is obtained.			

* Two or more points may be found which lower the audio output. At the correct point the minimum audio output is approached rapidly and is much lower than at any incorrect point.

†† Align T3 and T2 by means of alternate loading as explained under AM alignment. Use a 680 ohm resistor instead of a 47,000 ohm resistor and load the FM windings.

** L1, L3 and L9 are adjustable by increasing or decreasing the spacing between turns.

‡ After dial pointer has been set accurately on calibration point for "A" band (see dial indicator and drive drawing) tune receiver to 90 mc. on FM using dial scale as reference or use dial scale drawing on page 8.

©John F. Rider

Compliments of www.nucow.com

MODEL 9W106
Ch. RC-622

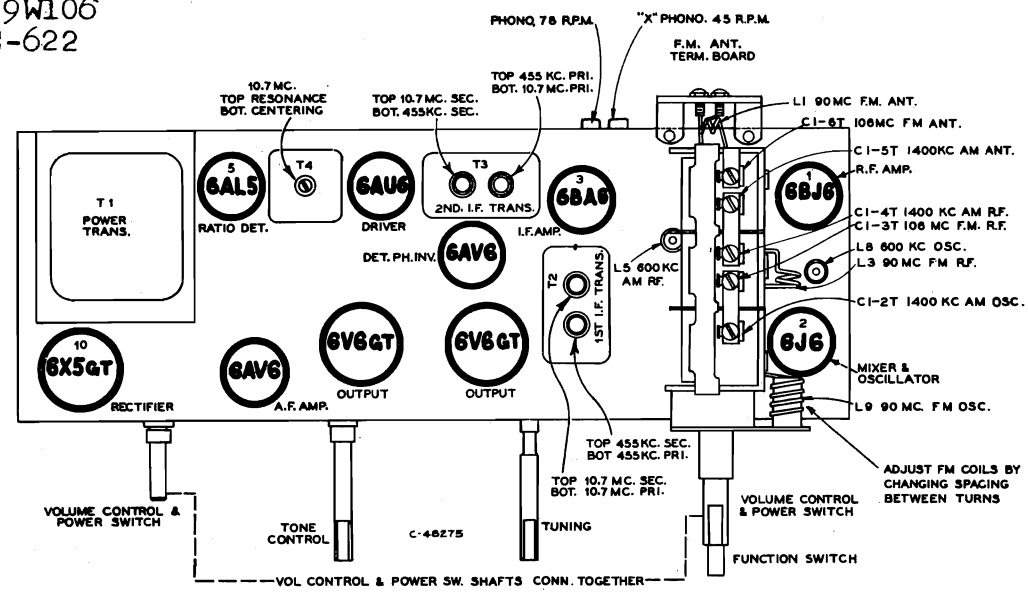

Tube and Trimmer Locations

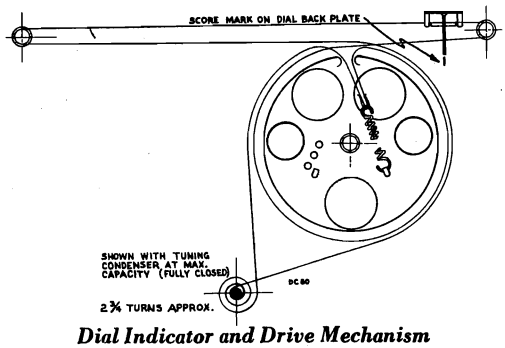

Dial Indicator and Drive Mechanism

CABLE SHOWN IN EXTREME COUNTER CLOCKWISE POSITION

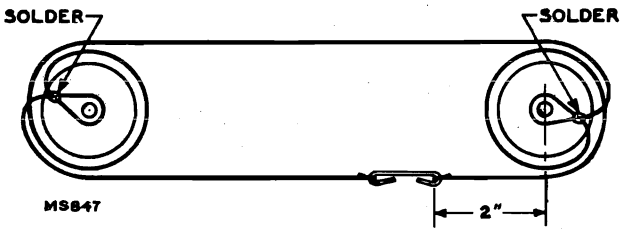

Volume Control Drive Mechanism

Socket Voltages

Voltages measured with Chanalyst or VoltOhmyst and should hold within ±20% with rated line voltage. Tuning condenser closed—no signal input.

Tube	Terminal		Voltage Phono	Voltage A.M.	Voltage F.M.
V1 6BJ6 R.F. Amp.	Plate	5	—	185	110
	Screen	6	—	120	100
	Cathode	2	—	0.8	0.8
	Grid	1	–0.9	–0.0	–0.6
V2 6J6 Mixer and Osc.	Plate	1	—	73	80
	Grid	6	–1.07	–2	–3.4
	Plate	2	—	56	56
	Grid	5	–0.54	–5.4	–3.6
V3 6BA6 I.F. Amp.	Plate	5	—	180	178
	Screen	6	—	115	111
	Cathode	7	—	0.9	0.9
	Grid	1	–0.95	–1.1	–.75
V4 6AU6 Driver	Plate	5	—	174	175
	Screen	6	—	125	175
	Cathode	7	—	0.9	0.9
V5 6AL5 Ratio Det.	——	—	—	—	—
V6 6AV6 A.F. Amp.	Plate	7	97	85	80
	Grid	1	–.72	–.75	–0.75
V7 6AV6 Inverter	Plate	7	140	110	110
	Grid	1	–18.7	–17.8	–17.3
	Cathode	2	–18	–17	–16.6
V8 6V6GT Output	Plate	3	262	270	270
	Screen	4	262	190	190
	Grid	5	–18	–17	–16
V9 6V6GT Output	Plate	3	262	270	270
	Screen	4	262	190	190
	Grid	5	–18	–17	–16
V10 6X5GT Rectifier	Cathode	8	271	275	275

Cathode Currents (MA)

Tube	Terminal	Phono	A.M.	F.M.
V1 6BJ6	2	—	11.1	11.4
V2 6J6	7	—	6.8	6.6
V3 6BA6	7	—	13.1	13.7
V4 6AU6	7	—	8.2	8.1
V5 6AL5	1 & 5	—	—	—
V6 6AV6	2	0.68	.44	.43
V7 6AV6	2	1.7	1.4	1.35
V8 6V6GT	8	33	11.2	11
V9 6V6GT	8	33	11	11
V10 6X5GT	8	66	63	63

©John F. Rider

Compliments of www.nucow.com

MODEL 9W106,
Ch. RC-622

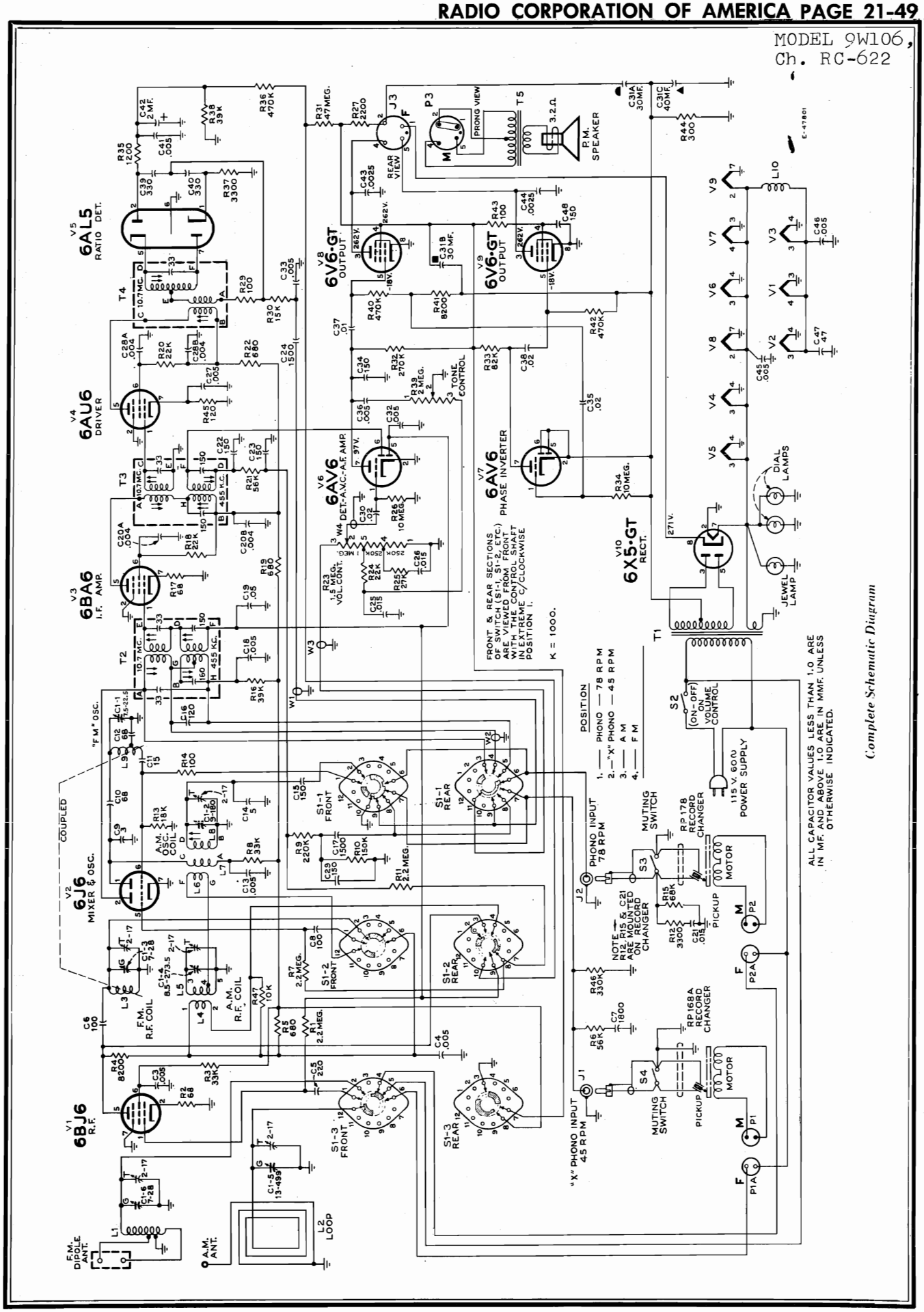

Complete Schematic Diagram

©John F. Rider

Compliments of www.nucow.com

MODEL 9W106,Ch. RC-622

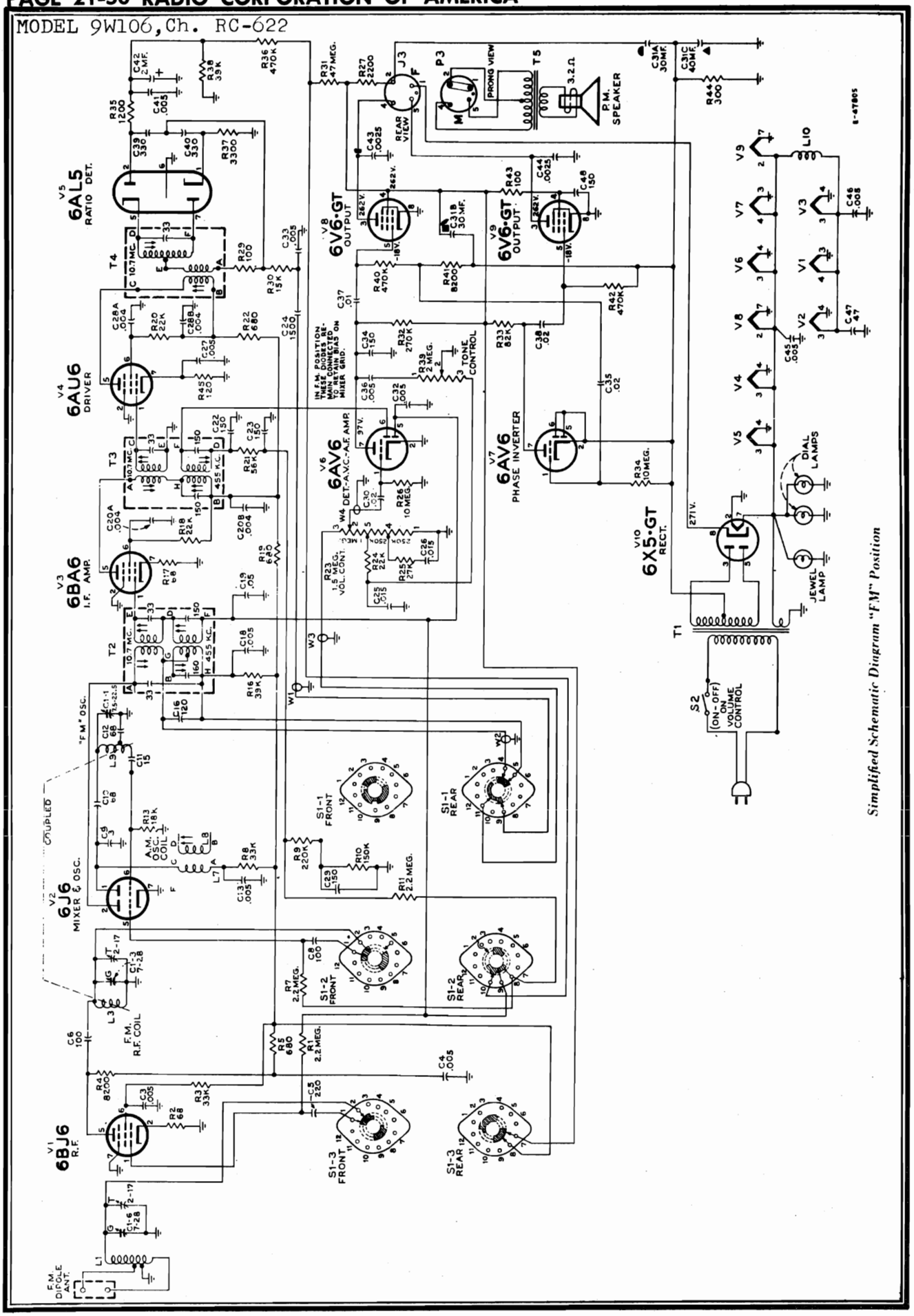

Simplified Schematic Diagram "F.M" Position

©John F. Rider

Compliments of www.nucow.com

MODEL 9W106, Ch. RC-622

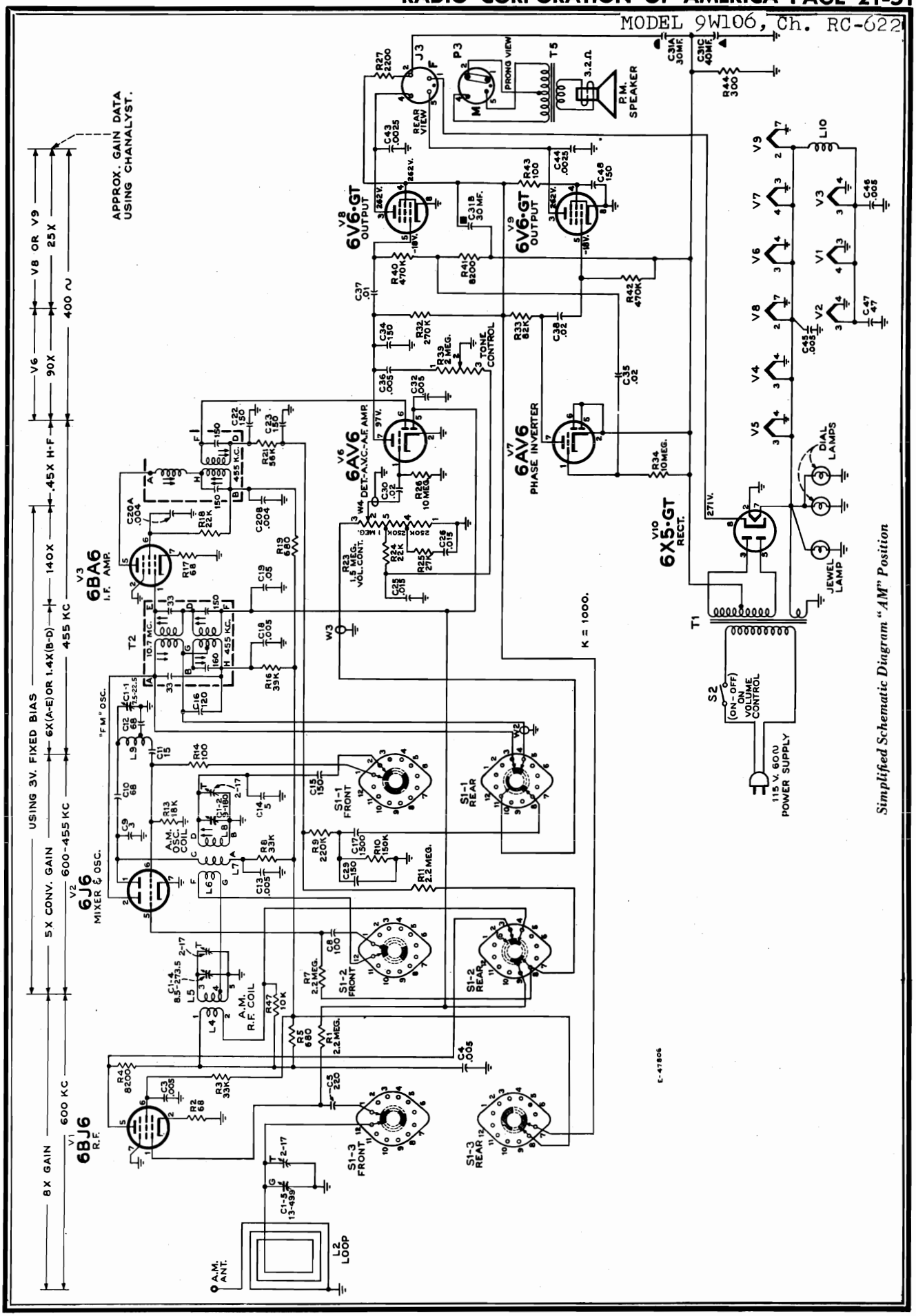

Simplified Schematic Diagram "AM" Position

©John F. Rider

Compliments of www.nucow.com

MODEL 9W106,
Ch. RC-622

RECORD CHANGER: Model RP-178, on Pages RCD.CH.18-1 through RCD.CH.18-13.

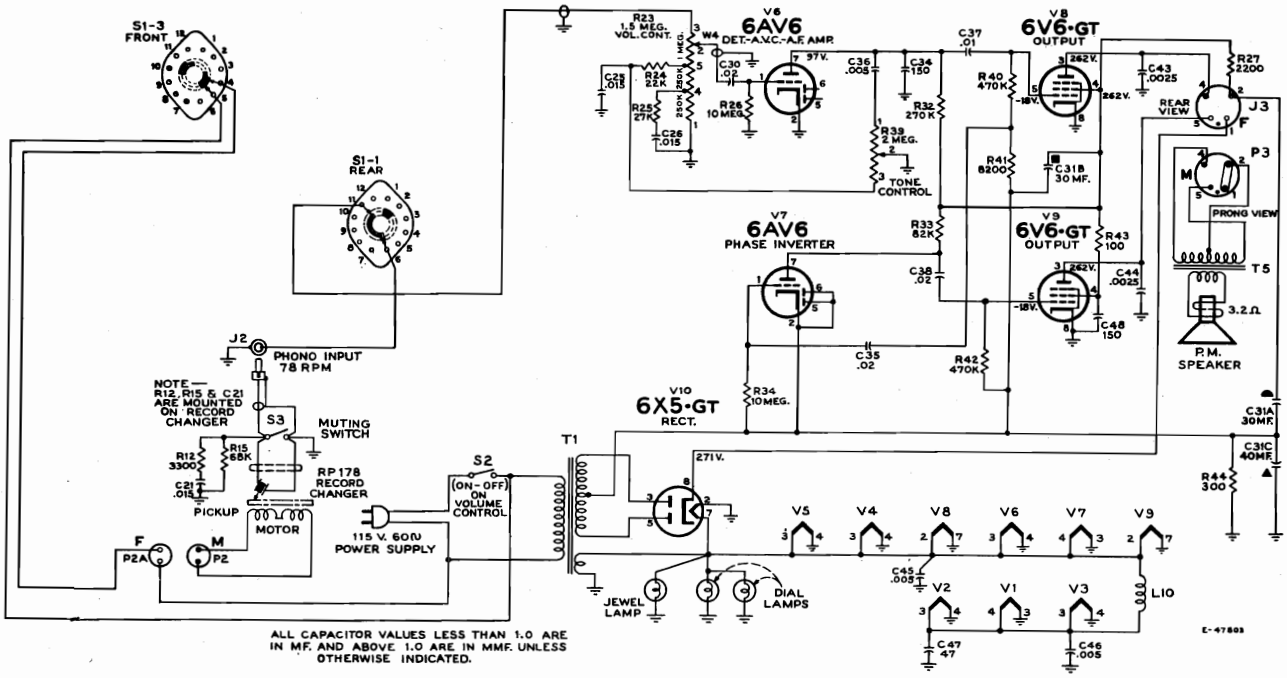

Simplified Schematic Diagram of 78 RPM Phonograph

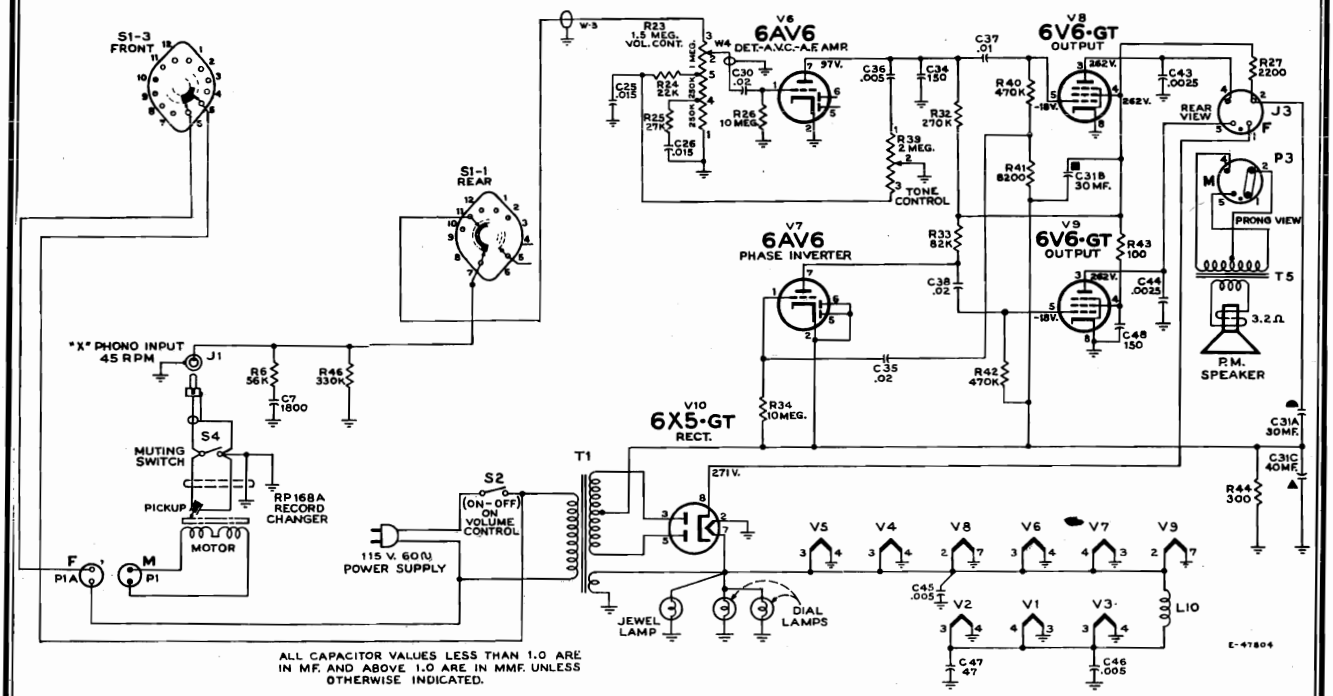

Simplified Schematic Diagram of 45 RPM Phonograph

RECORD CHANGER: Model RP-168, on Pages RCD.CH.19-1 through RCD.CH.19-8.

©John F. Rider

Compliments of www.nucow.com

MODEL 9W106,
Ch. RC-622

SHIPPING SCREWS

The radio chassis of these instruments is secured to the cabinet with shipping screws (painted red) which, together with spacing strips, should be **REMOVED** at the time of installation.

The record changers are each mounted with three screws which should be **LOOSENED** at the time of installation.

On the RP-168A-1 record changer decorative caps cover the mounting screws. Unscrew the caps for access to the screws.

RP-168 RECORD CHANGER

Pickup Landing Adjustment "A"

The pickup point should land half-way between the outer edge of the record and the first music groove.

If the pickup lands inside the starting grooves—turn screw "A" slightly clockwise. If pickup lands outside the starting grooves—turn screw "A" slightly counterclockwise.

Pickup Height Adjustment "B"

During cycle the pickup arm must rise high enough to clear a stack of eight records on the turntable, but not high enough to cause the top of the arm to touch records resting on the record supports.

If pickup does not clear a stack of eight records—turn screw "B" slightly clockwise. If pickup arm touches records on record supports—turn screw "B" slightly counterclockwise.

Record Separators

During service work the position of the star wheel on the underside of the record changer may be accidentally shifted; this may cause the record separator knives to be extended when in the out of cycle position.

If the separator knives are thus extended—turn the power on so that the turntable is revolving, gently press fingers against the extended knives until they disappear inside the center post—DO THIS ONLY WHILE MECHANISM IS OUT OF CYCLE.

CARE OF SAPPHIRE

The sapphire point on the pickup is protected with a permanent metal guard. Lint may collect to clog the opening in the guard at the sapphire point and cause poor record reproduction. Occasional cleaning may be necessary; brush carefully with a small soft brush.

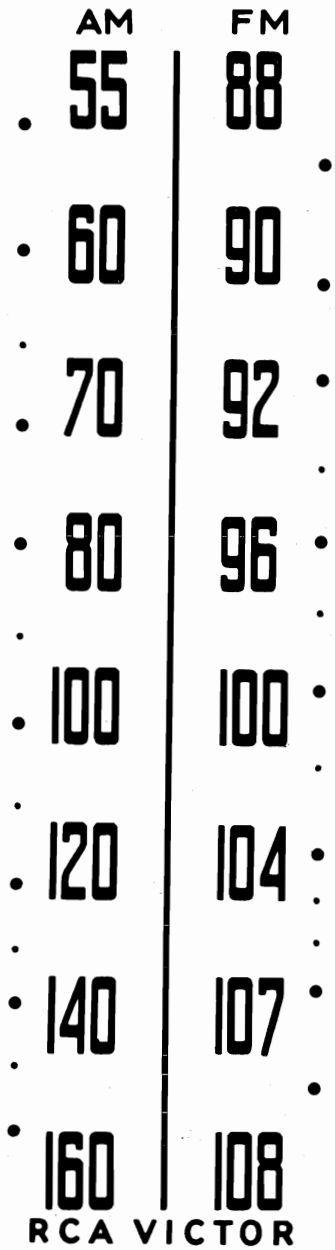

Dial Scale (Actual Size)

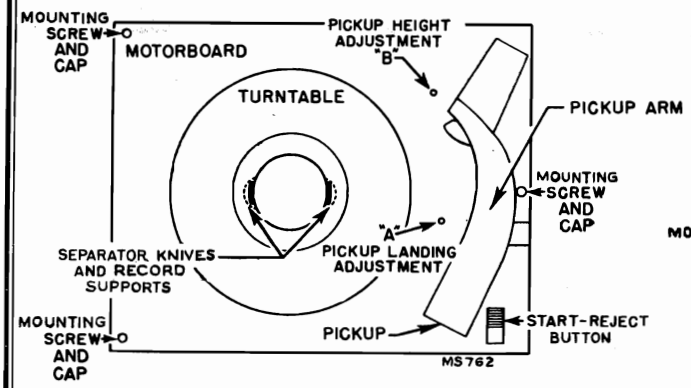

Top View—RP-168 Record Changer

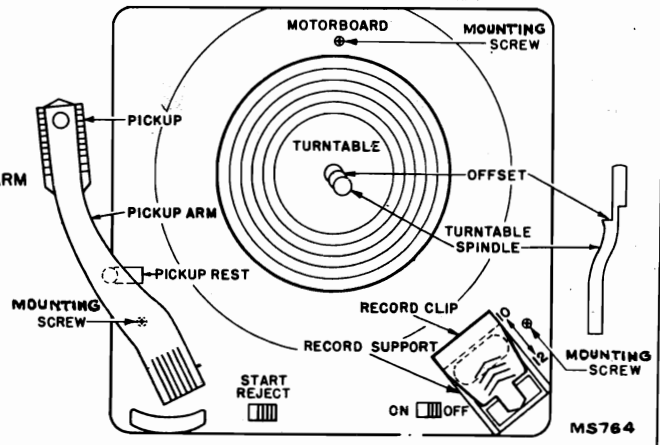

Top View—RP-178 Record Changer

©John F. Rider

Compliments of www.nucow.com

MODEL 9W106,
Ch. RC-622

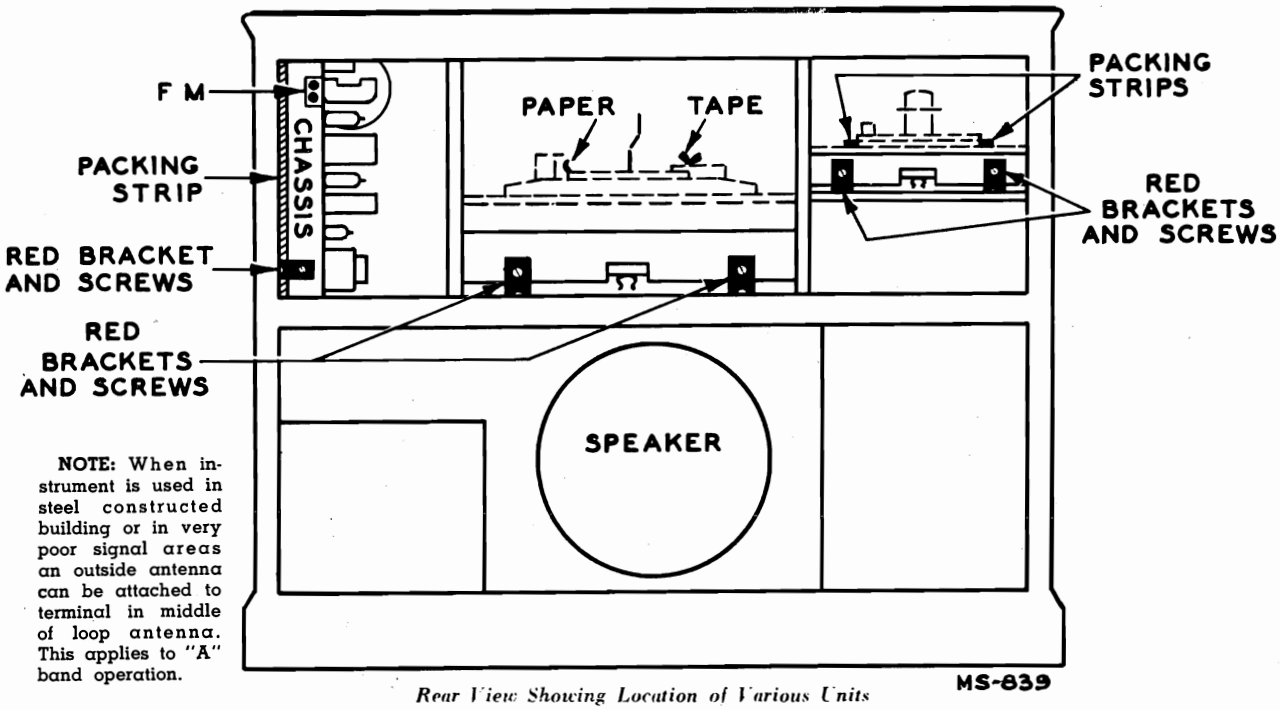

NOTE: When instrument is used in steel constructed building or in very poor signal areas an outside antenna can be attached to terminal in middle of loop antenna. This applies to "A" band operation.

Rear View Showing Location of Various Units

REPLACEMENT PARTS

STOCK No.	DESCRIPTION
	CHASSIS ASSEMBLIES RC 622
*74848	Board—"F.M." terminal board
*74641	Cable—Flexible cable to operate volume control
*74849	Capacitor—Variable tuning capacitor (C1-1, 1-2, 1-3, 1-4, 1-5, 1-6)
73747	Capacitor—Electrolytic, 2 mmf., 50 volts (C42)
*74733	Capacitor—Ceramic, 3 mmf. (C9)
93056	Capacitor—Ceramic, 5 mmf. (C14)
39044	Capacitor—Ceramic, 15 mmf. (C11)
39042	Capacitor—Ceramic, 47 mmf. (C47)
33379	Capacitor—Ceramic, 68 mmf. (C10, C12)
39396	Capacitor—Ceramic, 100 mmf. (C6, C8)
71614	Capacitor—Ceramic, 120 mmf. (C16)
44704	Capacitor—Ceramic, 150 mmf. (C15, C22, C23, C34, C48)
48125	Capacitor—Ceramic, 150 mmf. (C29)
71920	Capacitor—Ceramic, 220 mmf. (C5)
39640	Capacitor—Mica, 330 mmf. (C39, C40)
74093	Capacitor—Ceramic, 1,500 mmf. (C17, C24)
*74850	Capacitor—Ceramic, 1,800 mmf. (C7)
74009	Capacitor—Ceramic, dual, 4,000 mmf. (C20A, C20B, C28A, C28B)
73473	Capacitor—Ceramic, 5,000 mmf. (C3, C4, C13, C18, C32, C46)
72052	Capacitor—Electrolytic, comprising 1 section of 30 mfd, 450 volts, 1 section of 30 mfd, 350 volts and 1 section of 40 mfd, 25 volts (C31A, C31B, C31C)
71926	Capacitor—Tubular, paper, .005 mfd, 200 volts (C27, C33, C41, C45)
71553	Capacitor—Tubular, paper, .005 mfd, 400 volts (C36)
70644	Capacitor—Tubular, paper, .0025 mfd, 1,000 volts (C43, C44)
71925	Capacitor—Tubular, paper, .01 mfd, 400 volts (C37)
71928	Capacitor—Tubular, paper, .02 mfd, 200 volts (C30, C35)
73638	Capacitor—Tubular, paper, .02 mfd, 400 volts (C38)
73553	Capacitor—Tubular, paper, .05 mfd, 400 volts (C19)
72120	Capacitor—Tubular, paper, .015 mfd, 200 volts (C25, C26)
73744	Coil—Oscillator coil—A.M. (L6, L7, L8)
*74841	Coil—R.F. coil — A.M. — complete with adjustable core and stud (L4, L5)
*74815	Coil—R.F. coil—F.M. (L3)
*74816	Coil—Antenna coil—F.M. (L1)
*73817	Coil—Oscillator coil—F.M. (L9)
71942	Coil—Filament choke coil (L10)
5040	Connector—4 contact female connector for speaker cable (P3)
30868	Connector—2 contact female connector for motor cables (P2A)
*74837	Control—Tone control (R39)
74639	Control—Volume control and power switch (R23, S2)
72953	Cord—Drive cord (approx. 58" overall length)
*74839	Fastener—Push fastener to hold R.F. shelf assembly (4 required)
*74838	Grommet—Power cord strain relief grommet (1 set)
16058	Grommet—Rubber grommet for mounting R.F. shelf assembly (4 required)
72069	Grommet—Rubber grommet for rear mounting feet (2 required)
*73895	Indicator—Station selector indicator
74645	Nut—8-32 hex retainer nut between R.F. shelf and volume control knob
74297	Plate—Dial back plate complete with two (2) drive cord pulleys less dial
18469	Plate—Bakelite mounting plate for electrolytic
74640	Pulley—Pulley and hub assembly for volume control
33514	Receptacle—Phono input receptacle
73637	Resistor—Wire wound, 2,200 ohms, 5 watt (R27)
	Resistor—Fixed, composition:
	68 ohms, ±10%, ½ watt (R2, R17)
	100 ohms, ±5%, ½ watt (R29)
	100 ohms, ±10%, ½ watt (R14, R43)
	120 ohms, ±10%, ½ watt (R45)
	300 ohms, ±5%, 2 watt (R44)
	680 ohms, ±10%, ½ watt (R19)
	680 ohms, ±20%, ½ watt (R5, R22)
	1,200 ohms, ±5%, ½ watt (R35)
	3,300 ohms, ±5%, ½ watt (R37)
	8,200 ohms, ±10%, ½ watt (R41)
	8,200 ohms, ±10%, 1 watt (R4)
	10,000 ohms, ±10%, ½ watt (R47)

©John F. Rider

Compliments of www.nucow.com

REPLACEMENT PARTS — Continued

MODEL 9W106, Ch. RC-622

STOCK No.	DESCRIPTION
	15,000 ohms, ±10%, ½ watt (R30)
	18,000 ohms, ±10%, ½ watt (R13)
	22,000 ohms, ±10%, ½ watt (R18, R20, R24)
	27,000 ohms, ±10%, ½ watt (R25)
	33,000 ohms, ±10%, ½ watt (R3, R8)
	39,000 ohms, ±5%, ½ watt (R38)
	39,000 ohms, ±10%, 1 watt (R16)
	56,000 ohms, ±10%, ½ watt (R6, R21)
	82,000 ohms, ±10%, ½ watt (R33)
	150,000 ohms, ±10%, ½ watt (R10)
	220,000 ohms, ±10%, ½ watt (R9)
	270,000 ohms, ±10%, ½ watt (R32)
	330,000 ohms, ±10%, ½ watt (R46)
	470,000 ohms, ±10%, ½ watt (R36, R40, R42)
	2.2 megohm, ±20%, ½ watt (R1, R7, R11)
	10 megohm, ±20%, ½ watt (R26, R34)
	47 megohm, ±20%, ½ watt (R31)
73894	Shaft—Tuning knob shaft
73584	Shield—Tube shield for V1
74646	Sleeve—Sleeve and pulley assembly for volume control knob
74179	Socket—Tube socket, 7 pin, miniature for V1, V2, V3, V4
73117	Socket—Tube socket, 7 pin, miniature for V5, V6, V7
31251	Socket—Tube socket, octal, wafer for V8, V9, V10
31364	Socket—Lamp socket
74038	Spring—Drive cord spring
*74847	Support—Polystyrene support for F.M. oscillator coil complete with mounting bracket
*74840	Switch—Selector switch (S1)
73743	Transformer—Ratio detector transformer (T4)
73745	Transformer—First I.F. transformer—dual (T2)
74019	Transformer—Second I.F. transformer—dual (T3)
73601	Transformer—Power transformer—117 volt, 60 cycle (T1)
33726	Washer—"C" washer for tuning shaft
	SPEAKER ASSEMBLY 92569-6W
13867	Cap—Dust cap
73934	Cone—Cone and voice coil assembly
5039	Connector—4 contact male connector for speaker
74753	Speaker—12" P.M. (6.8 oz.) speaker complete with cone and voice coil (3.2 ohm), less output transformer and plug
71145	Suspension—Metal cone suspension
73636	Transformer—Output transformer
	NOTE: If stamping in instruments does not agree with above speaker number, order replacement parts by referring to model number of instrument, number stamped on speaker and full description of part required.
	MISCELLANEOUS
*74844	Antenna—F.M. antenna
74205	Bezel—Dial scale bezel less dial
71599	Bracket—Pilot lamp bracket
74296	Cable—Shielded pickup cable complete with pin plug
13103	Cap—Pilot lamp jewel
72120	Capacitor—Tubular, .015 mfd (C21)
71892	Catch—Bullet catch and strike for cabinet doors (3 required)
73897	Clamp—Dial clamp (2 required)
X3057	Cloth—Grille cloth for mahogany or walnut instruments
X1649	Cloth—Grille cloth for blonde instruments
30870	Connector—2 contact female connector for motor cables
30868	Connector—2 contact male connector for motor cables
74581	Cover—Mounting screw cover (plug-in type) for 45 RPM changer (3 required)
*74853	Decal—Control panel decal for mahogany or walnut instruments
*74854	Decal—Control panel decal for blonde instruments
74273	Decal—Trade mark decal (Victrola)
71984	Decal—Trade mark decal (RCA Victor)
*74842	Dial—Glass dial scale
*74851	Grille—Metal grille

STOCK No.	DESCRIPTION
11889	Grommet—Rubber grommet for front apron of chassis (2 required)
72856	Grommet—Rubber grommet to mount 78 RPM changer (3 required)
74838	Grommet—Strain relief grommet (1 set)
36610	Hinge—Door hinge (1 set) for radio compartment door or R.H. record storage compartment door
36817	Hinge—L.H. record storage compartment door hinge (1 set)
71821	Knob—Tuning control knob—maroon—for mahogany or walnut instruments
72824	Knob—Tuning control knob—brown—for blonde instruments
71822	Knob—Tone control knob—maroon—for mahogany or walnut instruments
72824	Knob—Tone control knob—brown—for blonde instruments
73994	Knob—Volume control knob—maroon—for mahogany or walnut instruments
73995	Knob—Volume control knob—brown—for blonde instruments
73230	Knob—Selector switch knob—maroon—for mahogany or walnut instruments
73231	Knob—Selector switch knob—brown—for blonde instruments
11765	Lamp—Dial or pilot lamp—Mazda 51
*74843	Loop—Antenna loop complete (L2)
73109	Nut—Tee nut to mount 78 RPM changer (3 required)
74208	Nut—Tee nut to mount 45 RPM changer (3 required)
*74852	Pull—Door pull for record changer drawers or radio compartment door (5 required)
74451	Pull—Door pull for record storage compartment doors (2 required)
	Resistor—Fixed, composition: 3,300 ohms, ±10%, ½ watt (R12) 68,000 ohms, ±10%, ½ watt (R15)
73110	Screw—No. ¼-20 x 1¾" fillister head screw to mount 78 RPM changer (3 required)
74582	Screw—No. 8-32 x 1¾" special head screw to mount 45 RPM changer (3 required)
74269	Screw—No. 8-32 x ¾" trimit head screw for door pull No. 74852
74279	Screw—No. 8-32 x ⅞" trimit head screw for door pull No. 74451
74835	Slide—Slide mechanism for 45 RPM changer drawer
74736	Slide—Slide mechanism for 78 RPM changer drawer
30900	Spring—Retaining spring for knobs No. 71821, 71822 and 72824
72845	Spring—Retaining spring for knobs No. 73994 and 73995
14270	Spring—Retaining spring for knobs No. 73230 and 73231
74421	Spring—Conical spring to mount 45 RPM changer—upper—R.H. (1 required)
74222	Spring—Conical spring to mount 45 RPM changer—upper—L.H. (2 required)
74423	Spring—Conical spring to mount 45 RPM changer—lower (3 required)
72936	Stop—Door stop for record storage compartment doors (2 required)
X3048	Doors—Set of doors (2) for Model "X" changer compartment and radio compartment for Model 9W106—mahogany
X3049	Doors—Set of doors (2) for Model "X" changer compartment and radio compartment for Model 9W106—walnut
X3050	Doors—Set of doors (2) for Model "X" changer compartment and radio compartment for Model 9W106—toasted mahogany
X3054	Doors—Set of doors (2) for record storage compartment for Model 9W106—mahogany
X3055	Doors—Set of doors (2) for record storage compartment for Model 9W106—walnut
X3056	Doors—Set of doors (2) for record storage compartment for Model 9W106—toasted mahogany
X3051	Panel—Center drawer panel for Model 9W106—mahogany
X3052	Panel—Center drawer panel for Model 9W106—walnut
X3053	Panel—Center drawer panel for Model 9W106—toasted mahogany

©John F. Rider

Compliments of www.nucow.com

MODELS 9X651, Ch. RC-1085; 9X652, Ch. RC-1085A

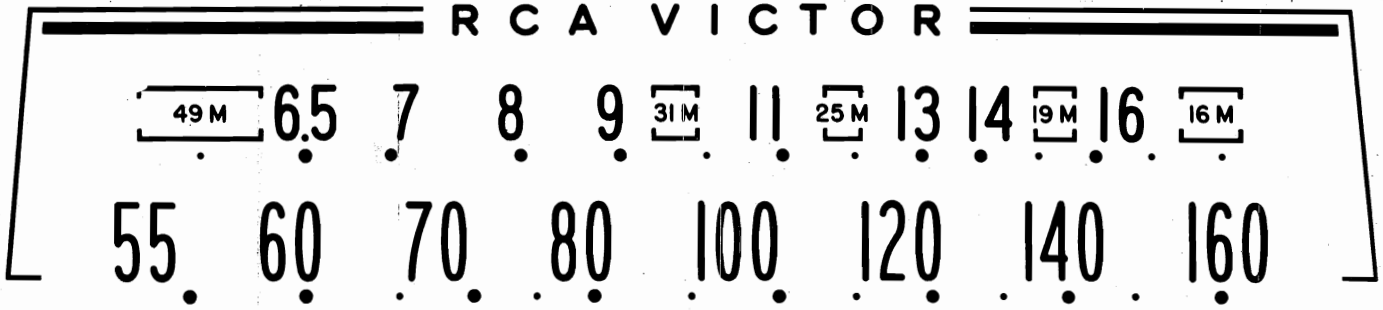

Dial Scale Actual Size

DS-9

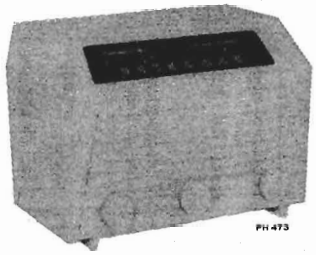

9X652—(Ivory Plastic)

9X651—(Brown Plastic)

Alignment Procedure

Test Oscillator.—Connect high side of test oscillator as shown in chart. Connect low side to chassis. Keep the output low to avoid A.V.C. action.

Note.—If the test oscillator is A.C. operated it may be necessary to use an isolation transformer (115v./115 v.) for the receiver during alignment, and the low side of the test oscillator connected to common wiring. Reverse line plug if hum is excessive.

Output Meter.—Connect meter across speaker voice coil. Turn volume control to maximum.

Dial Pointer Adjustment.—Rotate tuning condenser to maximum capacity position (plates fully meshed). Adjust dial to position indicated in drawing.

With the dial adjusted as described above mark the dial pan assembly with a pencil to provide a tuning indicator during alignment.

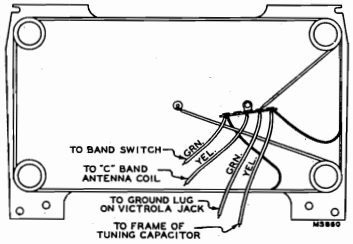

Loop Antenna

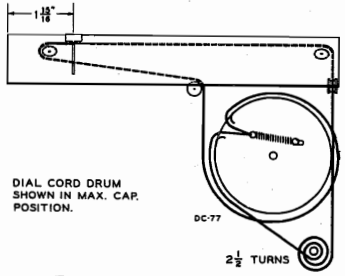

Dial Drive Mechanism

Cathode Currents

	"A" Band	"C" Band
(1) 12BA6	9.7 ma	9.6 ma
(2) 12BE6	7.8 ma	8.1 ma
(3) 12BA6	8.7 ma	8.4 ma
(4) 12SQ7	0.15 ma	0.15 ma
(5) 35LL	37 ma	37 ma
(6) 35Z5	65 ma	65 ma

Specifications

Tuning Ranges

Standard Broadcast ("A" Band)...540-1600 kc
Short Wave ("C" Band)..... 5.9-17.9 mc

Intermediate Frequency..... 455 kc

Tube Complement

(1) RCA 12BA6 .....R. F. Amplifier
(2) RCA 12BE6 ..... Converter
(3) RCA 12BA6 ..... I. F. Amplifier
(4) RCA 12SQ7..... Det. - A.F. - A.V.C.
(5) RCA 35L6GT ..... Output
(6) RCA 35Z5 ..... Rectifier

Dial Lamp..... Type 51, 6.3 volts, 0.25 amp.

Power Supply Rating

115 volts, D.C. or 50 to 60 cycles, A.C..... 35 watts

Loudspeaker

Type 92572-4 ..... 5 in. P.M.
V. C. Impedance.....3.2 ohms at 400 cycles

Power Output

Undistorted ..... 0.8 watts
Maximum ..... 1.2 watts

Tuning Drive Ratio .....11:1 (5½ turns of knob)

NOTE: If reception is not obtained on DC, reverse plug in outlet receptacle. This may also reduce hum on AC operation.

To Remove Chassis from Cabinet

1. Remove knobs (just pull).
2. Remove four screws holding back.
3. Remove two screws in both ends of rear apron and slide chassis out.

Critical Lead Dress

1. Dress all heater leads and pilot lights leads down to chassis and away from all audio grid and plate wiring.
2. Dress lead from ant. section of gang to pin 1 of V1 direct and as short as possible but position for low capacity to chassis.
3. Dress lead from ant. section of gang to S1-1 rear contact #3 direct and as short as possible but position for low capacity to chassis.
4. Leads to loop antenna are long and draped to permit tube servicing by lowering loop back. They should be evenly spaced to maintain low capacity and dressed to prevent touching gang plates.
5. All R.F. leads to coils should be short and direct. Dress other leads and components away from coils.

©John F. Rider

Compliments of www.nucow.com

MODELS 9X651, Ch. RC-1085; 9X652, Ch. RC-1085A

Steps	Connect the High Side of The Test Osc. to—	Tune Test Osc. to—	Range Switch to—	Turn Radio Dial to—	Adjust for maximum output
1	Pin No. 1 of 12BA6 I.F. amp. tube in series with 0.1 mfd.	455 kc.	"A"	Quiet Point near 1600 kc.	Top and bottom T2 2nd I.F. Trans.
2	Pin No. 7 of 12BE6 Converter tube in series with 0.1 mfd.				Top and bottom T1 1st I.F. Trans.
3	Pin No. 1 of 12BA6 R.F. tube in series with 0.1 mfd.				L2 wave trap for minimum output.
4	(Radiated signal) short piece of wire placed near ant.	1630 kc.	"A"	1630 kc. (Cap. min.)	C-13 "A" Osc.
5		1500 kc.		1500 kc.	C-2 "A" ant.
6		600 kc.		600 kc.	L6 "A" Osc. Rocking gang.
7	Repeat steps 4, 5 and 6.				
8	Center terminal on loop antenna Term. board through 47 mfd. Low side to loop primary terminal	18.2 mc.	"C"	18.2 mc. (Min. cap.)	C-12* "C" Osc.
9		15.2 mc.		15.2 mc.	C-3**† "C" Ant.
10		6.1 mc.		6.1 mc.	L-5†† "C" Osc. L-1 "C" Ant.
11	Repeat steps 8, 9 and 10 as necessary.				

*Two peaks should be found, use one having lowest capacity.
**Two peaks should be found, use one having highest capacity.
Note: Check for image frequences.
†Radio dial tuned to 15.2 mc. as in step 9, tune test osc. to 16.11 mc. where a weaker signal should be heard.
††Radio dial tuned to 6.1 mc. as in step 10, tune test osc. to 7.01 mc. where a weaker signal should be heard.

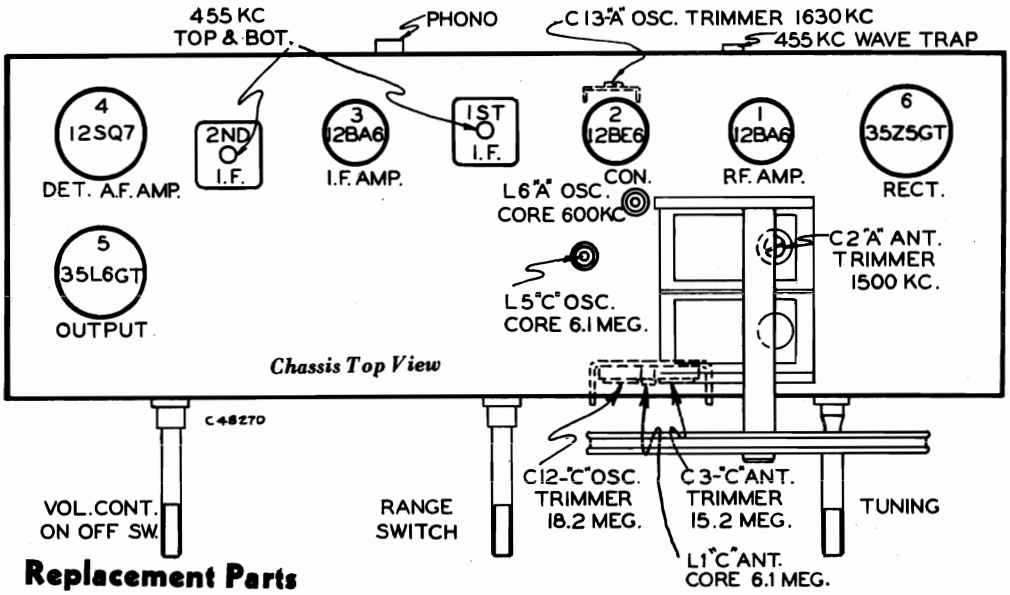

Replacement Parts

Stock No.	DESCRIPTION
	CHASSIS ASSEMBLIES RC 1085-9X651 RC 1085A-9X652
71042	Button—Plugbutton for trimmer adjustment hole
74924	Capacitor—Mica trimmer, dual, 3-35 mmf. (C3, C12)
74923	Capacitor—Mica trimmer, 4-70 mmf. (C13)
74917	Capacitor—Variable tuning capacitor (C1, C2, C4)
71924	Capacitor—Ceramic, 56 mmf. (C9, C11)
73501	Capacitor—Ceramic, 150 mmf. (C10, C14, C23)
74929	Capacitor—Mica, 590 mmf. (C6)
39665	Capacitor—Mica, 3600 mmf. (C5)
72312	Capacitor—Electrolytic, comprising 1 section of 30 mfd, 15 volts, and 1 section of 80 mfd, 150 volts. (C17A, C17B)
72315	Capacitor—Tubular, paper, .002 mfd, 200 volts (C15)
73561	Capacitor—Tubular, paper, .01 mfd, 400 volts (C22)
70572	Capacitor—Tubular, paper, .015 mfd, 400 volts (C16)
71928	Capacitor—Tubular, paper, .02 mfd, 200 volts (C20)
73553	Capacitor—Tubular, paper, .05 mfd, 400 volts (C7, C8, C19)
70617	Capacitor—Tubular, paper, 0.1 mfd, 400 volts (C24)
73935	Clip—Mounting clip for I.F. transformer
74925	Coil—Oscillator coil—"A" band complete with adjustable core and stud (L6)
74926	Coil—Oscillator coil—"C" band complete with adjustable core and stud (L5)
74927	Coil—Antenna coil—"C" band (L1)
74928	Coil—Series wave trap coil (455KC) complete with adjustable core and stud (L2)
74930	Coil—Peaking coil (12 mh) (L3, R1)
72618	Coil—Peaking coil (20 mh) (L4, R18)
38410	Control—Volume control and power switch (R19, S2)
72953	Cord—Drive cord (approx. 48" overall)
33139	Grommet—Rubber grommet for chassis base
72283	Grommet—Rubber grommet for mounting tuning capacitor (3 req'd)
74838	Grommet—Power cord strain relief grommet (1 set)
74696	Indicator—Station selector indicator
70980	Lead—Antenna lead—part of loop and back cover
74919	Loop—Back cover and loop assembly complete with antenna lead for Model 9X651
74920	Loop—Back cover and loop assembly complete with antenna lead for Model 9X652
74690	Plate—Dial back plate complete with 4 drive cord pulleys less dial
35787	Receptacle—Phono input jack (J1)
	Resistor—Fixed, composition: 15 ohms, ±10%, ½ watt (R15)

©John F. Rider

Compliments of www.nucow.com

MODELS 9X651, Ch. RC-1085; 9X652, Ch. RC-1085A

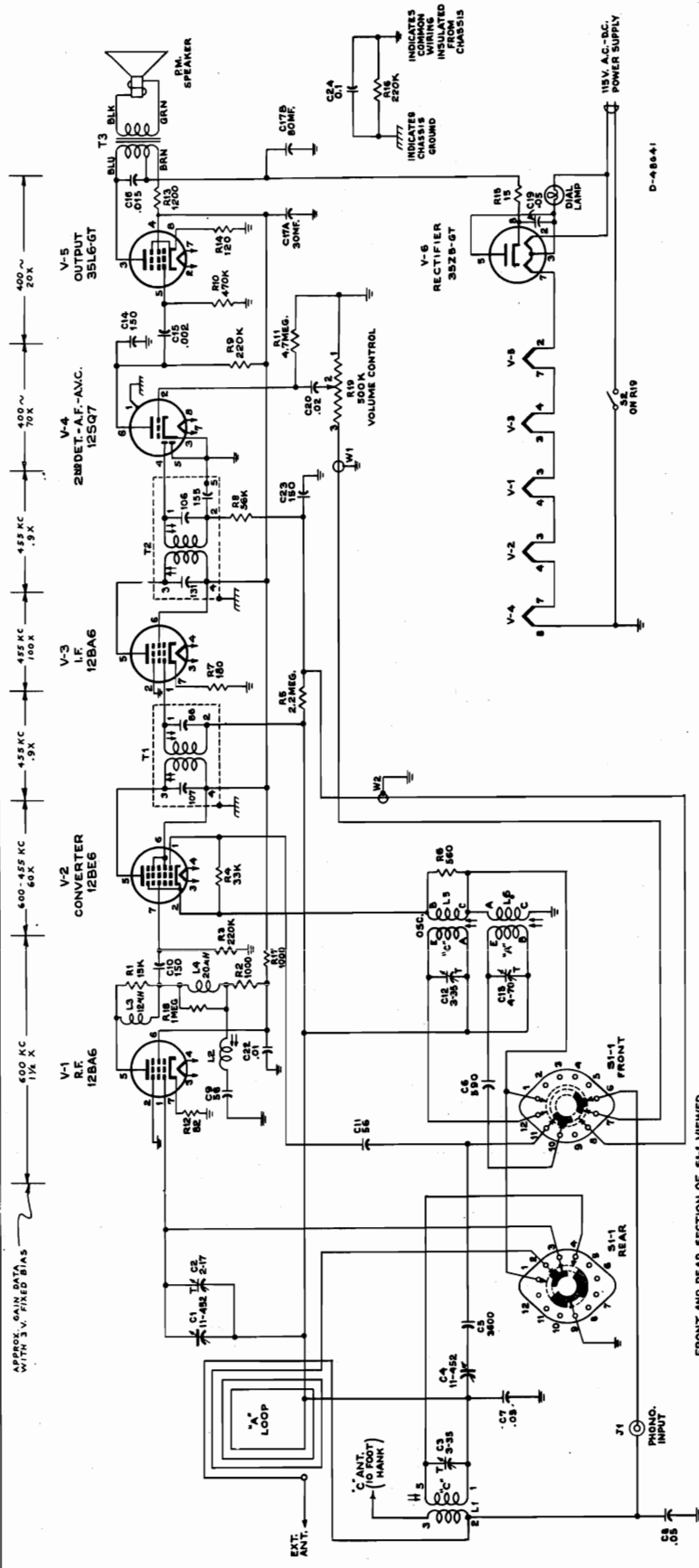

Schematic Diagram

Stock No.	DESCRIPTION
	82 ohms, ±10%, ½ watt (R-12)
	120 ohms, ±10%, ½ watt (R14)
	180 ohms, ±10%, ½ watt (R7)
	560 ohms, ±10%, ½ watt (R6)
	1000 ohms, ±10%, ½ watt (R2, R17)
	1200 ohms, ±10%, 1 watt (R13)
	33,000 ohms, ±10%, ½ watt (R4)
	56,000 ohms, ±10%, ½ watt (R8)
	220,000 ohms, ±10%, ½ watt (R3, R9, R16)
	470,000 ohms, ±10%, ½ watt (R10)
	2.2 megohm, ±20%, ½ watt (R5)
	4.7 megohm, ±20%, ½ watt (R11)
74922	Shaft—Tuning knob shaft and pulley
73117	Socket—Tube socket, 7 contact, miniature
54414	Socket—Tube socket, octal, saddle mounted
74697	Socket—Dial lamp socket and lead
74038	Spring—Drive cord tension spring
74921	Switch—Selector switch (S1)
73976	Transformer—Output transformer (T3)
74918	Transformer—First I.F. transformer (T1)
73037	Transformer—Second I.F. transformer (T2)
35969	Washer—"C" washer for tuning shaft
	SPEAKER ASSEMBLIES 92572-4
73900	Speaker—5" P.M. speaker complete with cone and voice coil NOTE:—If stamping in instrument does not agree with above speaker number, order replacement parts by referring to model number of instrument, number stamped on speaker and full description of part required.

MISCELLANEOUS

Y2174	Cabinet—Brown plastic cabinet for Model 9X651
Y2175	Cabinet—Ivory plastic cabinet for Model 9X652
74699	Clamp—Dial clamps (1 set)
74933	Decal—Selector switch function decal
74932	Dial—Polystyrene dial scale
74931	Knob—Volume control or tuning control knob—maroon—for Model 9X651
72645	Knob—Volume control or tuning control knob—ivory—for Model 9X652
74934	Knob—Selector switch knob—maroon—for Model 9X651
74935	Knob—Selector switch knob—ivory—for Model 9X652
11765	Lamp—Dial lamp—Mazda 51
30900	Spring—Retaining spring for knobs

©John F. Rider

Compliments of www.nucow.com

MODEL 9Y510,
Ch. RC-1077A

Specifications

Tuning Range.....540-1600 kc

Intermediate Frequency.....455 kc

Tube Complement
1. RCA-12BE6.....Converter
2. RCA-12BA6.....I-F Amplifier
3. RCA-12AV6.....Det., AVC., A-F Amplifier
4. RCA-50L6GT.....Output
5. RCA-35W4.....Rectifier

Power Supply Rating....115 volts, 60 cycles a.c., 60 watts

Dial Lamps (2).....Mazda type 1490, 3.2 volts, 0.16 amp.

Loudspeaker (92585-1)
Size and type.....5" x 7" P.M.
Voice coil impedance.....3.2 ohms at 400 cycles

Power Output
Undistorted.....1 watt
Maximum.....1.5 watts

Cabinet Dimensions
Height 7¾" Width 12⅜" Depth 14¼"

Tuning Drive Ratio.....7½:1 (3¾ turns of knob)

Record Changer (RP 190-1)
Turntable speed.....45 r.p.m.
Records used.....RCA—7 in. fine groove
Record capacity.....Up to 12 records
Pickup (Stock No. 75476).....Crystal (medium output)

FOR RECORD CHANGER SERVICE INFORMATION —REFER TO RP 190 SERIES SERVICE DATA

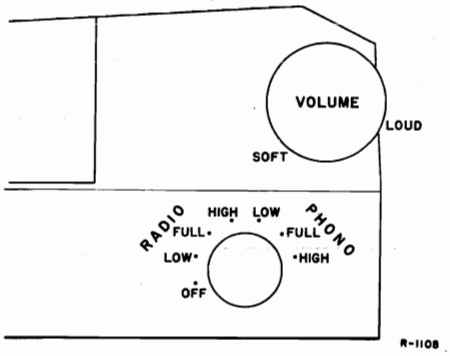

Controls—End View

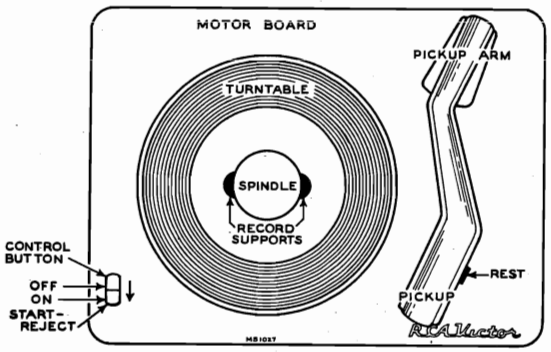

Record Changer—Top View

Care of Stylus

The record changer stylus is protected by a permanent metal guard. LINT MAY COLLECT TO CLOG THE OPENING IN THE GUARD AT THE STYLUS POINT AND CAUSE POOR RECORD REPRODUCTION. This may require occasional cleaning of the guard opening—clean by carefully brushing with a small soft brush.

Service Hints

The tubes and the dial lamps are accessible by removing the panel-in the front of the record changer compartment.

The chassis metal mounting plate should be flush against the front of the cabinet.

The position of the speaker is adjustable. When correctly positioned, it should set firmly against the front of the cabinet but with no undue strain on the speaker.

©John F. Rider

Compliments of www.nucow.com

MODEL 9Y510,
Ch. RC-1077A

Alignment Procedure

Output Meter—Connect meter across speaker voice coil. Turn volume control to maximum.

Test Oscillator—Connect low side of test oscillator to common wiring in series with a .1 mf. capacitor. If the test oscillator is a.c. operated it may be necessary to use an isolation transformer for the receiver during alignment and the low side of the test oscillator connected directly to common wiring at the electrolytic capacitor. Keep the oscillator output low to prevent a-v-c action.

Dial Pointer Adjustment—Rotate tuning condenser until the plates are fully open. Adjust indicator pointer to 1630 kc (extreme high frequency end of the scale).

Steps	Connect the high side of test to—	Tune test-osc. to—	Turn radio dial to—	Adjust the following for max. output
1	I.F. grid, in series with .1 mfd.	455 kc	Quiet point 1,600 kc end of dial	Pri. & Sec. 2nd I.F. transformer
2	Converter grid in series with .1 mfd.			Pri. & Sec. 1st I.F. transformer
NOTE—ANTENNA LOOP AND RECORD CHANGER MUST BE IN CABINET FOR THE FOLLOWING				
3	Short wire placed near loop for radiated signal	1,630 kc	Extreme R. H. end (gang open)	1,630 KC trimmer (osc.)
4		1,400 kc	1,400 kc	1,400 KC trimmer (ant.)
5		600 kc	600 kc	Osc. Coil L3 Rock gang
6	Repeat steps 3, 4, & 5 if necessary			

LEAD DRESS

1. Dress all heater leads and pilot light leads down to chassis and as far as possible from all audio grid and plate wiring.
2. Dress all exposed leads away from each other and away from chassis to prevent short circuits.
3. Dress lead from R.F. section of gang to V1 pin 7 direct but away from chassis base to reduce capacity, also away from fuse resistor.
4. Dress lead from oscillator section of gang to oscillator coil direct but away from chassis base to reduce capacity.
5. Connect capacitor C20 with short leads between gang frame and mounting bracket.
6. Dress output transformer leads down to base.
7. Dress loop antenna leads away from gang plates and tubes.
8. Dress 33 ohm limiting resistor away from chassis.

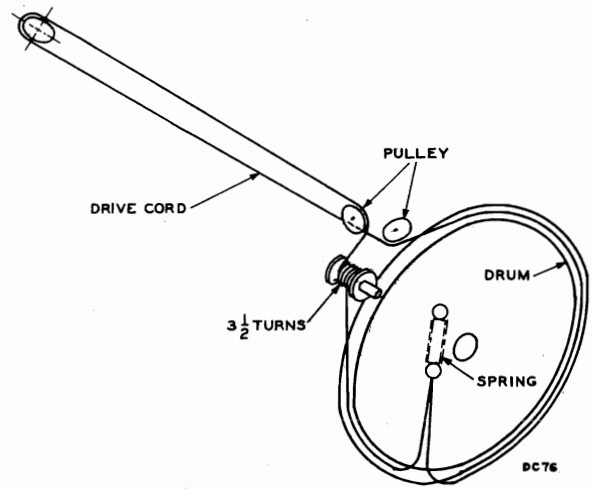

Dial Drive Mechanism

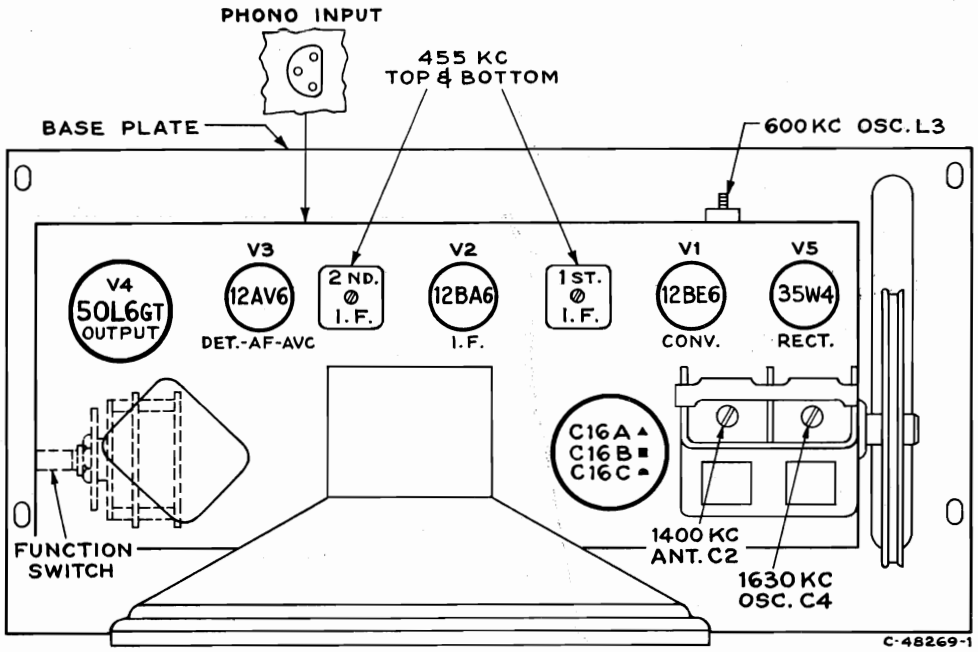

Tube and Trimmer Locations

©John F. Rider

Compliments of www.nucow.com

MODEL 9Y510,
Ch. RC-1077A

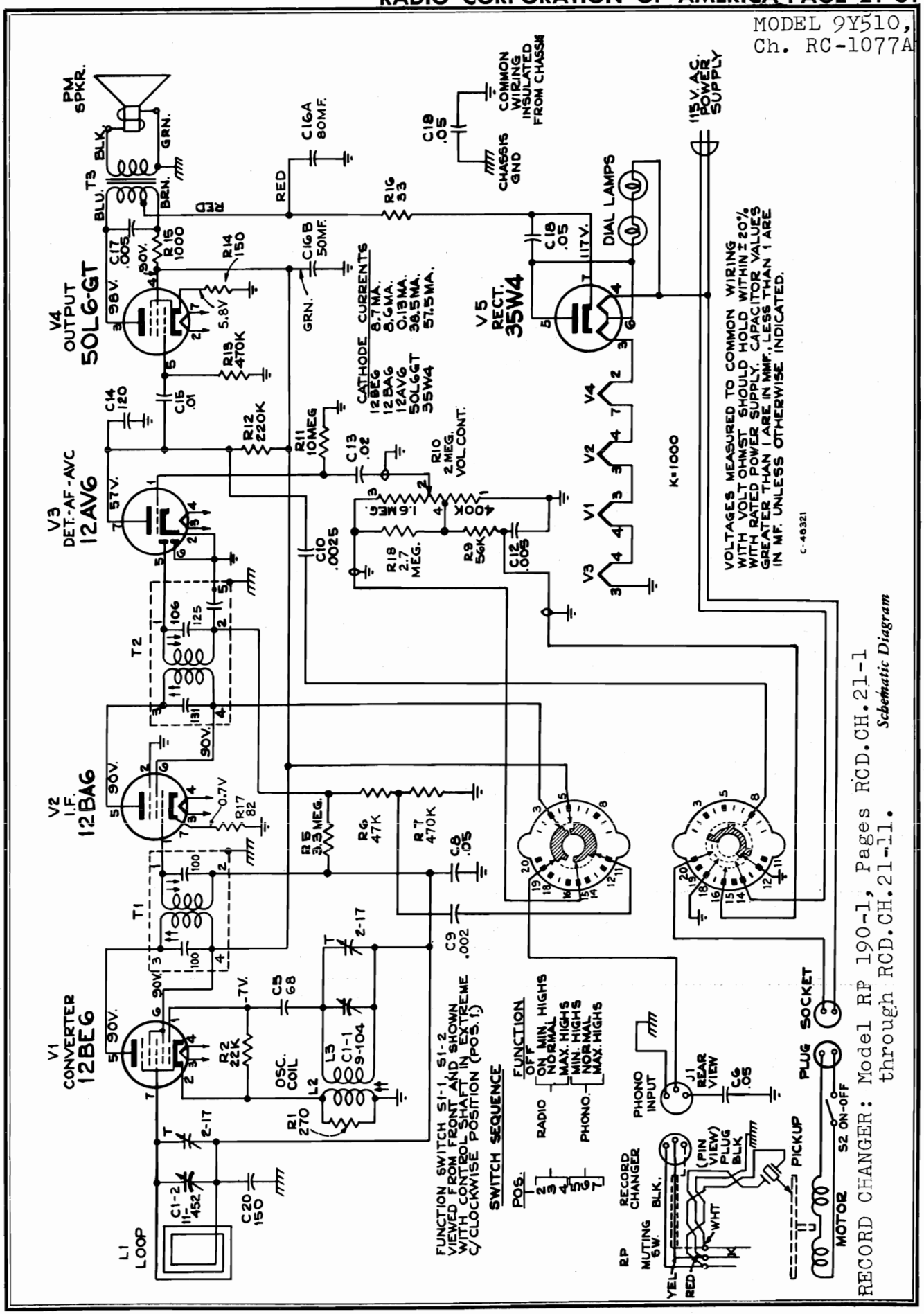

RECORD CHANGER: Model RP 190-1, Pages RCD.CH.21-1 through RCD.CH.21-11.

Schematic Diagram

©John F. Rider

Compliments of www.nucow.com

MODEL 9Y510,
Ch. RC-1077A

Replacement Parts

STOCK NO.	DESCRIPTION
	CHASSIS ASSEMBLIES RC 1077A
75909	Antenna—Antenna loop assembly L1
74705	Bracket—Drive cord pulley bracket (R.H.) complete with two (2) pulleys less long bracket.
74704	Capacitor—Variable tuning capacitor—less bracket .. C1-1, C1-2
39624	Capacitor—Mica, 68 mmf C5
39630	Capacitor—Mica, 120 mmf C14
39632	Capacitor—Mica, 150 mmf C20
73803	Capacitor—Tubular, paper, .002 mfd, 400 volts C9
73599	Capacitor—Tubular, paper, .0025 mfd, 400 volts C10
73920	Capacitor—Tubular, paper, .005 mfd, 400 volts C12, C17
73561	Capacitor—Tubular, paper, .01 mfd., 200 volts C15
73562	Capacitor—Tubular, paper, .02 mfd., 400 volts C13
73553	Capacitor—Tubular, paper, .05 mfd., 400 volts, C6, C8, C18, C19
75911	Capacitor—Electrolytic comprising 1 section of 80 mfd., 150 volts and 1 section of 50 mfd, 150 volts C16A, C16B
73935	Clip—Mounting clip for I.F. transformer
74448	Coil—Oscillator coil L2
36422	Connector—3 contact female connector for phono input cable, J1
30868	Connector—2 contact female connector for motor cable, P3
74702	Control—Volume control R10
†72953	Cord—Drive cord (approx. 49" over-all length required)
70392	Cord—Power cord and plug
74454	Gasket—Rubber gasket between speaker and cabinet
74838	Grommet—Strain relief grommet (1 set)
72283	Grommet—Rubber grommet to mount tuning capacitor
72602	Pulley—Drive cord pulley
72313	Resistor—Fuse type, 33 ohms R16
	Resistor—Fixed, composition:
	82 ohms, ±10%, ½ watt R17
	150 ohms, ±10%, ½ watt R14
	270 ohms, ±10%, ½ watt R1
	1000 ohms, ±10%, 1 watt R15
	22,000 ohms, ±20%, ½ watt R2
	47,000 ohms, ±20%, ½ watt R6
	56,000 ohms, ±10%, ½ watt R9
	220,000 ohms, ±20%, ½ watt R12
	470,000 ohms, ±20%, ½ watt R7, R13
	2.7 megohms, ±10%, ½ watt R18
	3.3 megohms, ±20%, ½ watt R5
	10 megohms, ±20%, ½ watt R11
74701	Shaft—Tuning knob shaft and pulley
73584	Shield—Tube shield for 12AV6
70827	Socket—Tube socket, octal, wafer
73117	Socket—Tube socket, 7 pin, miniature
72998	Socket—Dial lamp socket and lead
74038	Spring—Drive cord spring

STOCK NO.	DESCRIPTION
75910	Switch—Function switch S1-1
74654	Transformer—Output transformer T3
75486	Transformer—First I.F. transformer complete with adjustable cores T1
75487	Transformer—Second I.F. transformer complete with adjustable cores T2
33726	Washer—"C" washer for tuning knob shaft
	SPEAKER ASSEMBLIES 92585-1
74706	Speaker—5" x 7" P.M. speaker complete with cone and voice coil
	MISCELLANEOUS
Y2292	Cabinet—Plastic cabinet—maroon—less lid, lid support, metal grille and hinge assemblies
74713	Clamp—Dial clamp (2 req'd)
73508	Clip—Spring clip for knob #74710
75912	Clip—Spring clip for radio compartment back panel
30870	Connector—2 contact male connector for motor cable
74192	Connector—3 contact male connector for phono cable
74682	Decal—Function switch decal
74273	Decal—Trade mark decal (Victrola)
74722	Dial—Polystyrene dial scale
74782	Emblem—"RCA Victor" emblem
33317	Fastener—Push fastener for antenna loop mounting bracket
72894	Foot—Rubber foot (4 req'd)
74707	Grille—Metal grille
75697	Grommet—Rubber grommet for mounting record changer
75915	Hinge—Cabinet lid hinge (2 req'd)
74709	Indicator—Station selector indicator
74710	Knob—Volume control or tuning knob
74711	Knob—Function switch knob
71116	Lamp—Dial lamp—Type 1490
75914	Lid—Cabinet lid only
74717	Mask—End mask for dial (2 req'd)
74708	Motif—Decorative motif for front of cabinet
74788	Nut—Speed nut for radio compartment back panel clips
72765	Nut—Speed nut to fasten decorative motif
74715	Panel—Radio compartment back panel
74721	Plate—Dial back plate—less dial
73728	Screen—Ventilation screen
74716	Screw—#6-32 x ¼" cross recessed oval head machine screw for radio compartment back panel (3 req'd)
75913	Screw—#10-32 x ¾" cross recessed round head machine screw for mounting record changer
14270	Spring—Retaining spring for knob #74711
71824	Stud—Cabinet lid hinge stud and screw (2 req'd)
74714	Support—Lid support

† Stock No. 72953 is a reel containing 250 feet of cord.

©John F. Rider

Compliments of www.nucow.com

MODEL A-91,
Ch. RC-1095

PH567

FOR RECORD CHANGER SERVICE INFORMATION REFER TO RP-168 SERIES SERVICE DATA OR RP-190 SERIES SERVICE DATA FOR 45 R.P.M. AND MODEL 960284 SERVICE DATA FOR 78/33⅓ R.P.M. on Pages RCD.CH.19-1, RCD.CH.21-1, and RCD.CH.21-34 respectively.

Specifications

Tuning Range

Standard Broadcast (AM) ..... 540-1,600 kc.
Frequency Modulation (FM) ..... 88-108 mc.
Intermediate Frequencies .....AM—455 kc., FM—10.7 mc.

Tube Complement

(1) RCA 6J6 .....Mixer and Oscillator
(2) RCA 6BA6 .....I-F Amplifier
(3) RCA 6AU6 .....Driver
(4) RCA 6AL5 .....Ratio Detector
(5) RCA 6AV6 .....AM Det.—AVC—A-F Amplifier
(6) RCA 6C4 .....Ph. Inv.
(7) RCA 6V6GT .....Output
(8) RCA 6V6GT .....Output
(9) RCA 5Y3GT .....Rectifier

Dial Lamps (2) .....Type No. 51, 6-8 volts, 0.2 amp.
Jewel Lamp .....Type No. 51, 6-8 volts, 0.2 amp.

Tuning Drive Ratio .....10:1 (5 turns of knob)

Power Supply Rating .....115 volts, 60 cycles, 110 watts

Loudspeaker (92569-12W)

Size and type .....12 in. PM
Voice coil impedance .....3.2 ohms at 400 cycles

Power Output

(Radio) Undistorted 8 watts .....Maximum 9 watts
(Phono.) Undistorted 10 watts .....Maximum 11 watts

Weight .....90 lbs.

Cabinet Dimensions

Height 32 in. Width 32 in. Depth 19¾ in.

Record Changer (RP 168 or RP 190-2)

Turntable speed .....45 r.p.m.
Pickup {(RP 168—Stock No. 74625) (RP 190—Stock No. 75575)} .....Crystal

Record Changer (960284-1 or -2)

Turntable speed .....78 or 33⅓ r.p.m.
Pickup (Stock No. 75475) .....Crystal

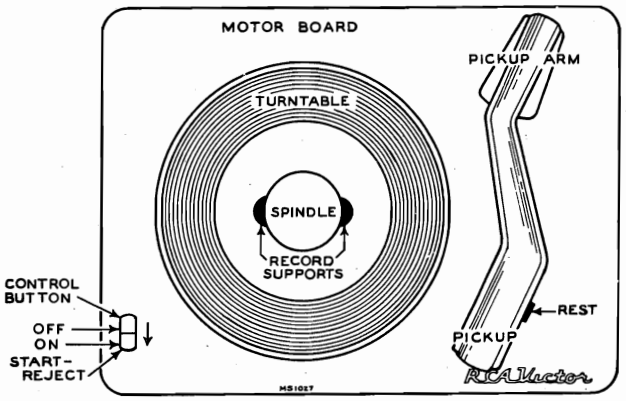

Top View—RP190 Record Changer

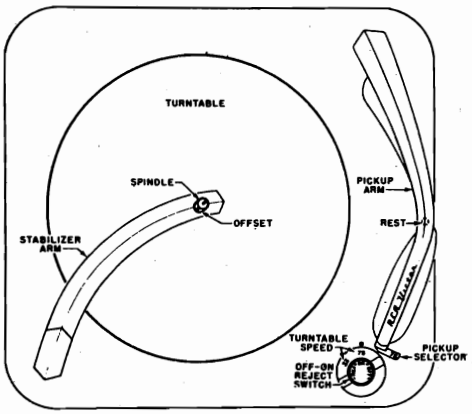

Top View—960284 Record Changer

©John F. Rider

Compliments of www.nucow.com

MODEL A-91,
Ch. RC-1095

ALIGNMENT PROCEDURE—CIRCUIT DESCRIPTION—LEAD DRESS

Alignment Procedure

CORRECT ALIGNMENT OF THE FM BAND REQUIRES THAT THE AM BAND BE ALIGNED FIRST

Alignment Indicators:

An RCA VoltOhmyst or equivalent meter is necessary for measuring developed d-c voltage during FM alignment. Connections are specified in the alignment tabulation. An output meter is also necessary to indicate minimum audio output during FM Ratio Detector alignment. Connect the output meter across the speaker voice coil.

The RCA VoltOhmyst can also be used as an AM alignment indicator, either to measure audio output or to measure a-v-c voltage.

When audio output is being measured the volume control should be turned to maximum.

Signal Generator:

For all alignment operations connect the low side of the signal generator to the receiver chassis. The output should be adjusted to provide accurate resonance indication at all times. If output measurement is used for AM alignment the output of the signal generator should be kept as low as possible to avoid a-v-c action.

Circuit Description

This instrument has a nine-tube (including rectifier) chassis which is very similar to those used in other RCA Victor radio-phonograph combinations designed for AM-FM reception.

The selector switch has five functions:

(1) Selection of tuning range.

(2) Selection and distribution of a.v.c. voltages.

(3) Application of B+ voltage to tubes V1, V2, and V3.

In "Phono 78/33" and "Phono 45" positions the B+ voltage is removed from tubes V1, V2 and V3.

(4) Selection of audio input applied to the volume control.

(5) Change in output tube bias.

In Radio positions R6 is in parallel with R42.

This receiver has built-in antennas for standard broadcast (AM) and frequency modulation (FM) reception.

Provision is made for the use of external antennas if desired.

Critical Lead Dress

Note: The leads listed may not be critical in all receivers. However, by dressing the leads as specified, unusual difficulties will be minimized.

1. The 2.2 meg mixer grid resistor (R10) should have a minimum practicable amount of lead extending on the grid end.
2. The first A.M. and first F.M. I.F. plate leads should be dressed away from the range switch wafer.
3. The ground strap between the R.F. shelf and the main chassis should be well soldered and kept as short as practicable.
4. Arrange wiring to prevent the filament wire between the mixer (6J6) and 1st I.F. (6BA6) tubes from passing near either the mixer grid, or the A.V.C. wiring.
5. Dress filament wires away from all audio coupling condensers.
6. Dress A.C. power switch wires away from the audio coupling condenser (C20) which is wired to the volume control.
7. Dress the mixer grid coupling condenser (C7) away from the lugs on the front range switch wafer.
8. The 1st I.F. tube A.V.C. by-pass condenser (C16) should ground at the same point as the cathode neutralizing loop.
9. The driver tube plate and screen by-pass condensers (C27, C28) should ground at the same point as the neutralizing loop.
10. The mixer plate by-pass condenser (C15) should ground as close to the R.F. shelf ground strap as practicable.
11. The shielded audio leads connecting to the front function switch wafer should have a minimum of exposed lead on the function switch end.

AM Alignment

FUNCTION SWITCH IN AM POSITION

Steps	Connect high side of sig. gen. to—	Sig. gen. output	Turn radio dial to—	Adjust for max. output
1	Stator of C1-4 in series with .01 mf.	455 kc.	Quiet point at low freq. end.	† Bottom (sec.) & top (pri.) cores of T4 † Top (sec.) & bottom (pri.) cores of T2
2	AM ant. terminal in series with 200 mmf.	1620 kc.	Extreme high freq. end.	C1-2 trimmer (osc.)
3		1400 kc.	1400 kc. signal	C1-4 trimmer (ant.)
4		600 kc.	600 kc. signal	L5 (osc.) Rock Gang
5	Repeat steps 2, 3 and 4			

† First peak T2 and T4 then starting with T4, use alternate loading. Connect a 47,000-ohm resistor across the primary to load the plate winding while the grid winding of the same transformer is being peaked. Then load the grid winding with the 47,000-ohm resistor while the plate winding is being peaked.

FM Alignment

FUNCTION SWITCH IN FM POSITION—VOLUME CONTROL MAXIMUM

Steps	Connect high side of sig. gen. to—	Sig. gen. output	Turn radio dial to—	Adjust for max. output
1	Connect the d-c probe of a VoltOhmyst to the negative lead of the 2 mfd. capacitor C40 and the common lead to chassis. Adjust sig. gen. output to provide approx. —3 v. indication during alignment			
2	Pin #1 of 6 AU6 (V3) in series with .01 mf.	10.7 mc. AM modulated	—	Top of driver trans. T5 for max. d.c. voltage
3				† Bottom of driver trans. T5 for min. audio output
4	Repeat steps 2 and 3			
5	To FM antenna terminals thru 120 ohms in each side of line	10.7 mc.	low frequency end	* Top (sec.) and bottom (pri.) cores of T3 * Top (sec.) and bottom (pri.) cores of T1
6		90 mc.	90 mc.	** L8 (osc.)
7		106 mc.	106 mc.	C1-3 trimmer (ant.)
8		90 mc.	90 mc. signal	** L1 (ant.) Rock Gang
9	Repeat steps 7 and 8			

† Two or more points may be found which lower the audio output. At the correct point the minimum audio output is approached rapidly and is much lower than at any incorrect point.

* Align T3 and T1 by means of alternate loading as explained under AM alignment. Use a 680 ohm resistor instead of a 47,000 ohm resistor and load the FM windings.

** L1 and L8 are adjustable by increasing or decreasing the spacing between turns.

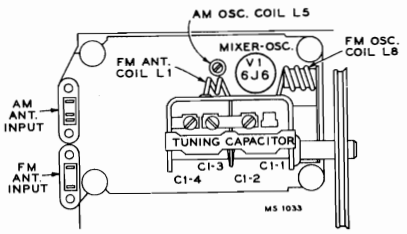

F. M. Coil Locations

©John F. Rider

Compliments of www.nucow.com

MODEL A-91,
Ch. RC-1095

TUBE AND TRIMMER LOCATIONS—VOLTAGE DATA

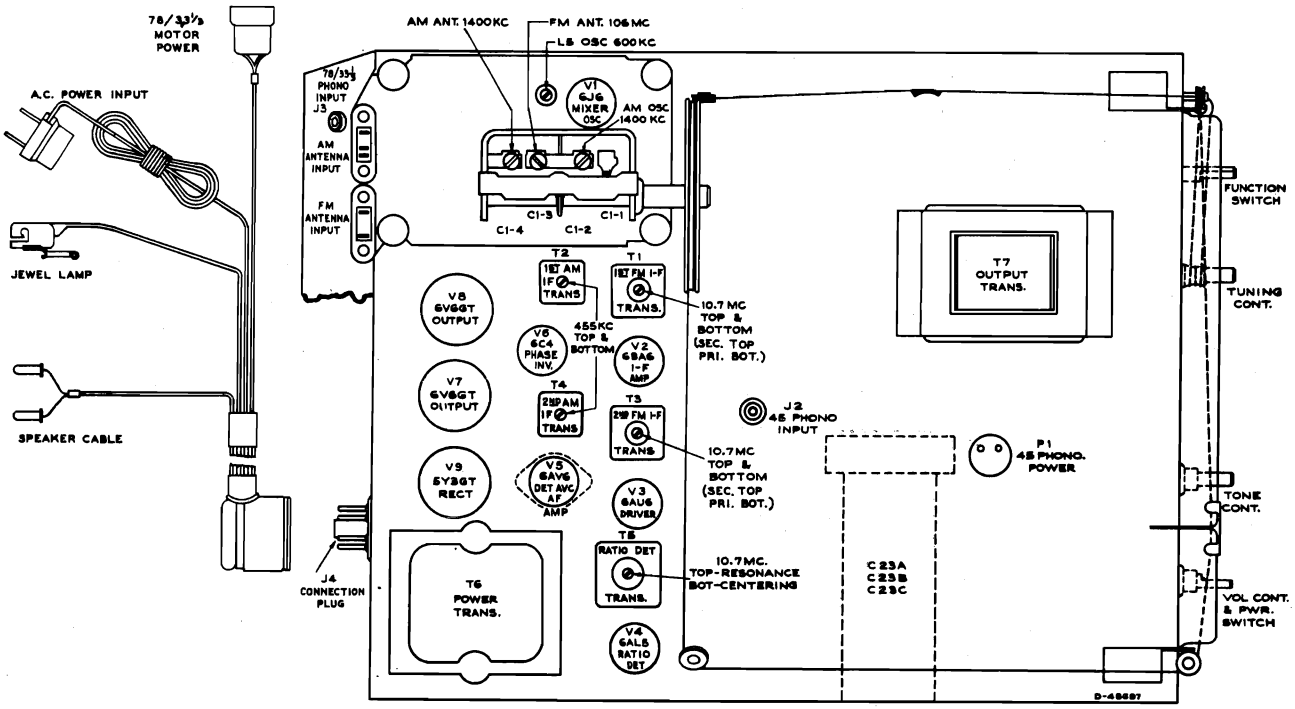

Tube and Trimmer Locations

Socket Voltages

Voltages measured to chassis with VoltOhmyst with no signal input and should hold within ±10% with 117-volt power supply.

Tube	Terminal		Voltage Phono	Voltage A.M.	Voltage F.M.
V1 6J6 Mixer and Oscillator	Plate	2	—	58	53
	Grid	5	—	−1.5	−1.3
	Plate	1	—	35	29
	Grid	6	—	−2.2	−2.0
V2 6BA6 I.F. Amp.	Plate	5	—	197	193
	Screen	6	—	112	104
	Cathode	7	—	0.67	0.77
	Grid	1	—	−1.2	−0.35
V3 6AU6 Driver	Plate	5	—	193	189
	Screen	6	—	125	123
	Cathode	7	—	1.1	1.1
V4 6AL5 Ratio Det.	——	—	—	—	—
V5 6AV6 A.F. Amp.	Plate	7	112	95	95
	Grid	1	−0.7	−0.7	−0.7
V6 6C4 Ph. Inv.	Plate	1–5	125	90	90
	Cathode	7	−12.2	−11	−11
	Grid	6	−19.2	−15.6	−15.6
V7 6V6GT or V8 Output	Plate	3	305	295	295
	Screen	4	299	214	212
	Grid	5	−19.2	−15.4	−15.4
V9 5Y3GT Rectifier	Filament	2	314	301	301

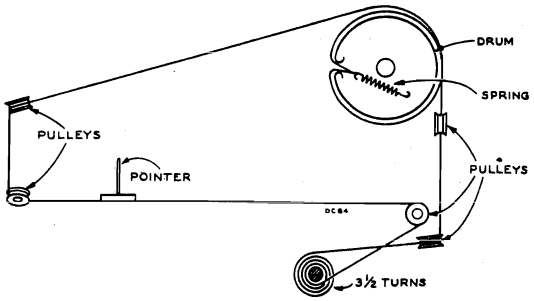

Dial Cord and Drive Assembly

Cathode Currents (Ma.)

Tube	Terminal	Phono	A.M.	F.M.
V1 6J6	7	—	2.8	2.8
V2 6BA6	7	—	16.6	16.5
V3 6AU6	7	—	9.4	9.3
V4 6AL5	1 & 5	—	—	—
V5 6AV6	2	0.8	0.5	0.5
V6 6C4	7	2.2	1.5	1.5
V7 6V6GT	8	35.6	18.6	18.5
V8 6V6GT	8	35.6	18.6	18.5
V9 5Y3GT	2	74.2	72.5	71.7

©John F. Rider

Compliments of www.nucow.com

MODEL A-91,
Ch. RC-1095

The cathode neutralizing loops of V2 (6BA6) and V3 (6AU6) are insulated wires approx. 2 in. long. Do not alter length.

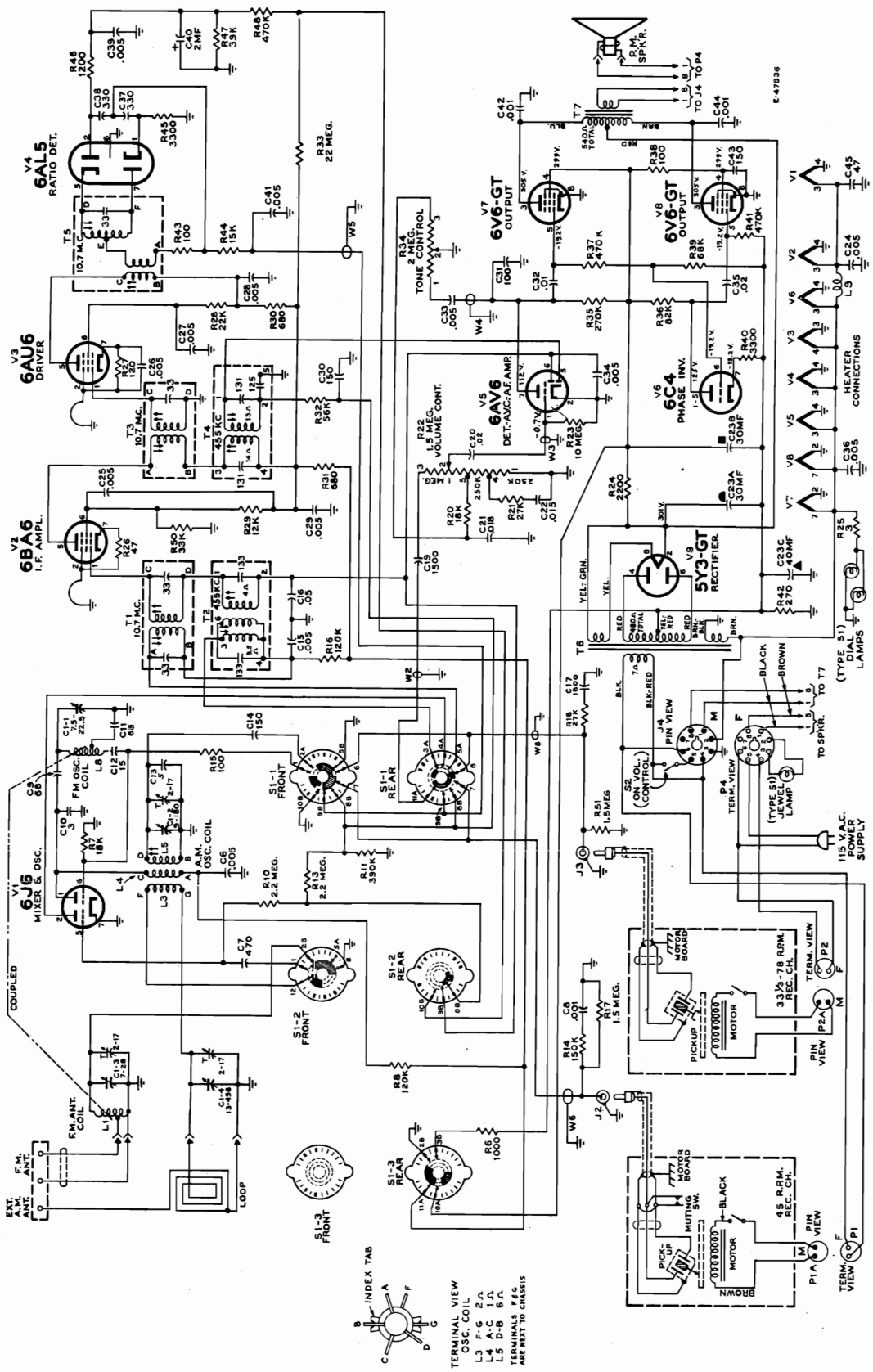

COMPLETE SCHEMATIC DIAGRAM

FUNCTION SWITCH VIEWED FROM FRONT AND SHOWN IN "PHONO 78/33" POSITION (MAX. C/CLOCKWISE)

VOLTAGES MEASURED TO CHASSIS WITH VOLTOHMYST AND NO SIGNAL INPUT AND SHOULD HOLD WITHIN ±20% WITH 117 VOLT POWER SUPPLY

RESISTANCE VALUES IN OHMS, K = 1000

CAPACITOR VALUES LESS THAN 1 ARE IN MF., VALUES GREATER THAN 1 ARE IN MMF. UNLESS OTHERWISE SPECIFIED

©John F. Rider

Compliments of www.nucow.com

MODEL A-91,
Ch. RC-1095

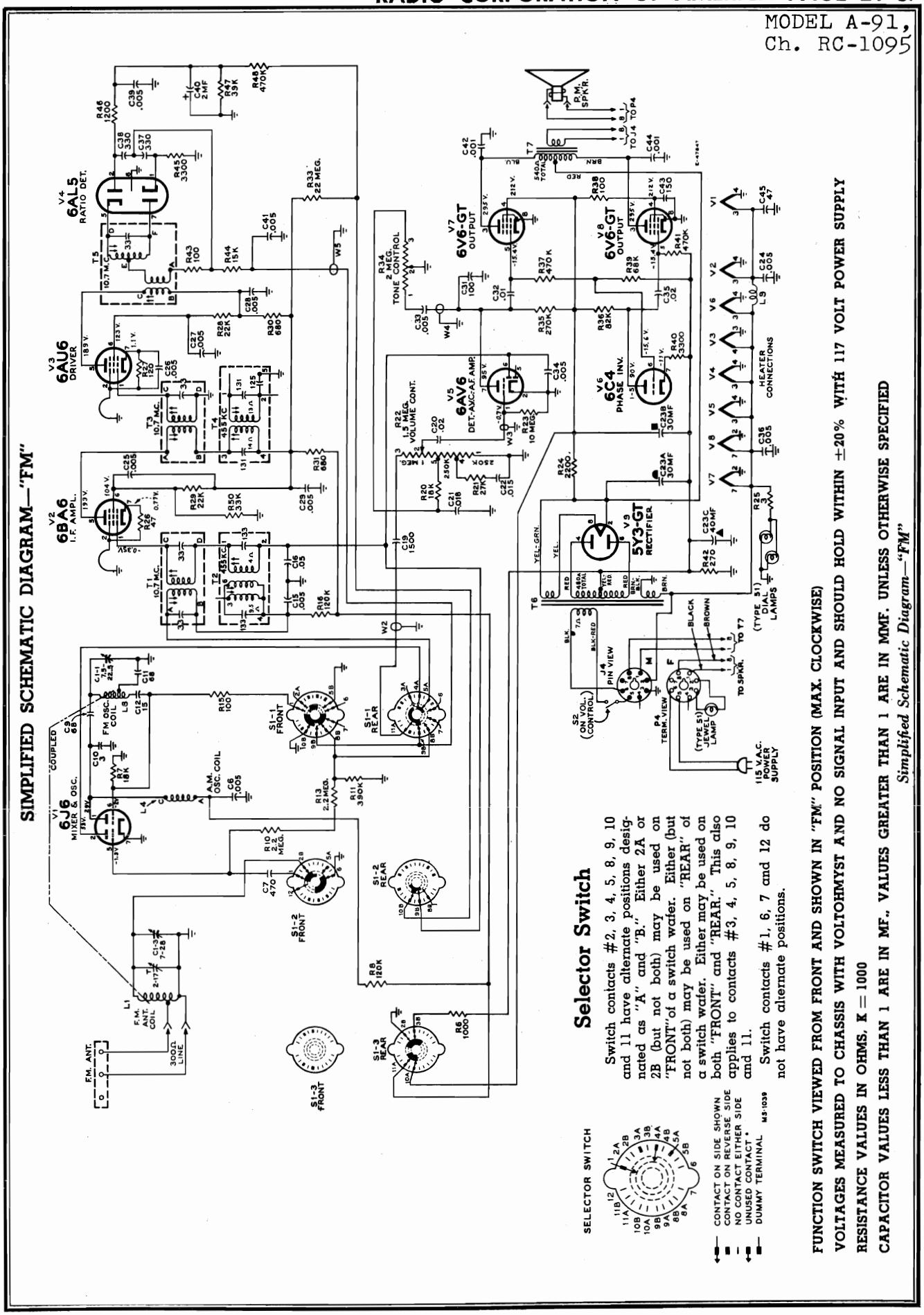

©John F. Rider

Compliments of www.nucow.com

MODEL A-91,
Ch. RC-1095

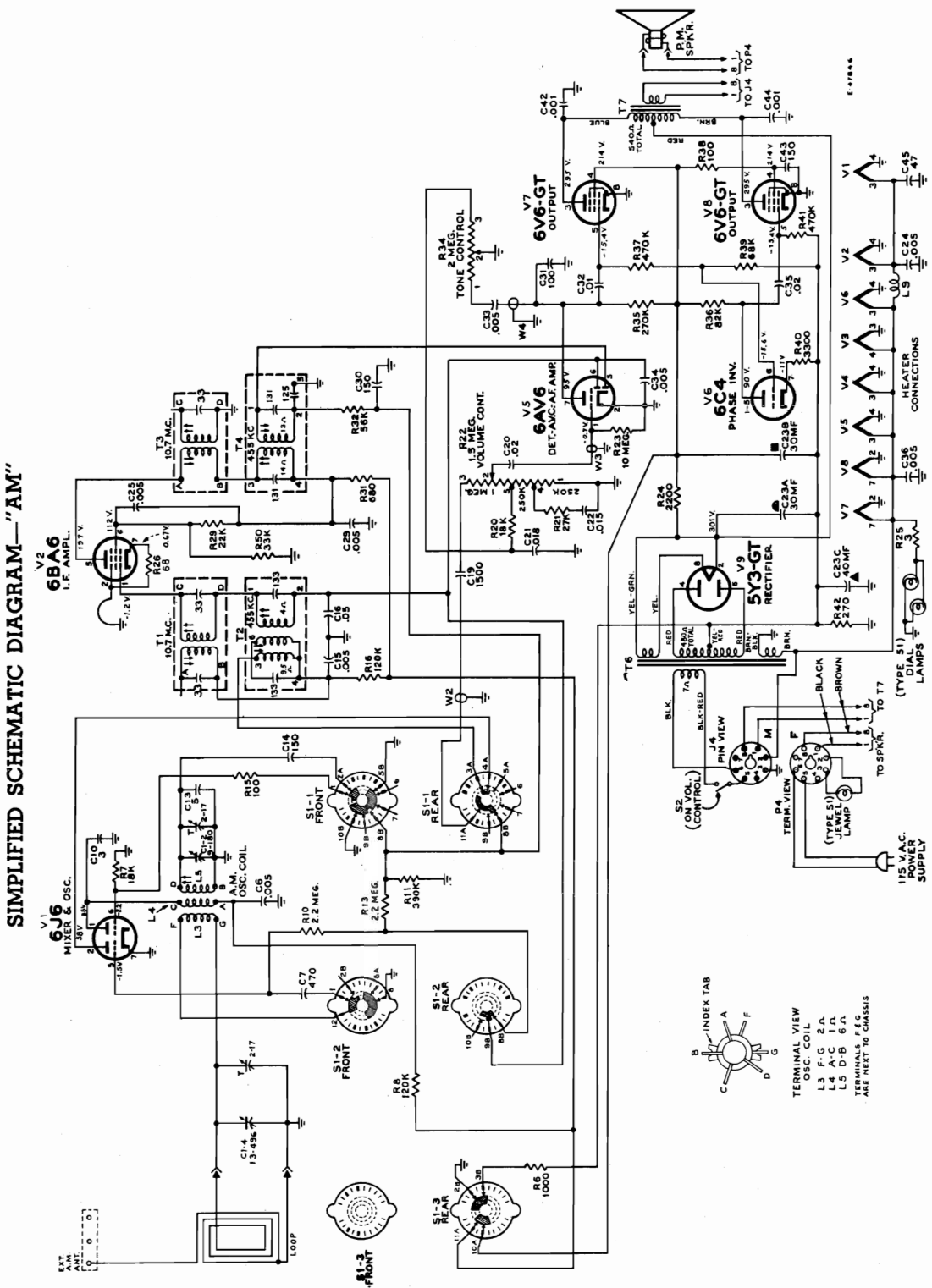

FUNCTION SWITCH VIEWED FROM FRONT AND SHOWN IN "AM" POSITION (#3 CLOCKWISE)
VOLTAGES MEASURED TO CHASSIS WITH VOLTOHMYST AND NO SIGNAL INPUT AND SHOULD HOLD WITHIN ±20% WITH 117 VOLT POWER SUPPLY
RESISTANCE VALUES IN OHMS, K = 1000
CAPACITOR VALUES LESS THAN 1 ARE IN MF., VALUES GREATER THAN 1 ARE IN MMF. UNLESS OTHERWISE SPECIFIED

Simplified Schematic Diagram—"AM"

©John F. Rider

Compliments of www.nucow.com

MODEL A-91,
Ch. RC-1095

PHONO SWITCH POSITIONS—MISC. SERVICE DATA

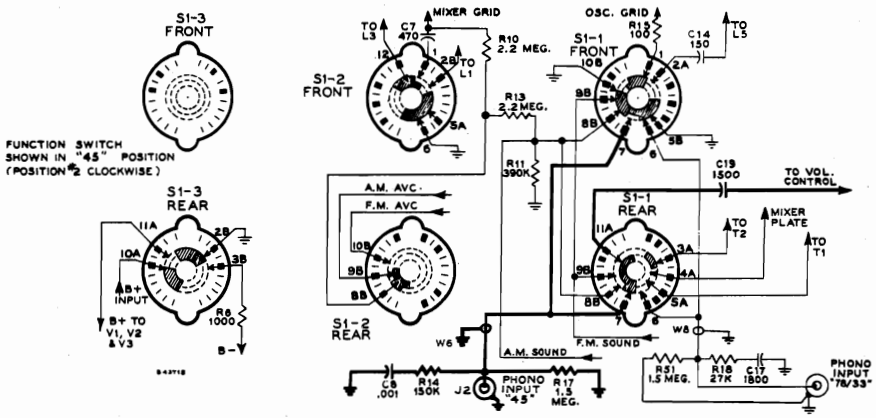

Switch Position Schematic Diagram—"Phono 45"

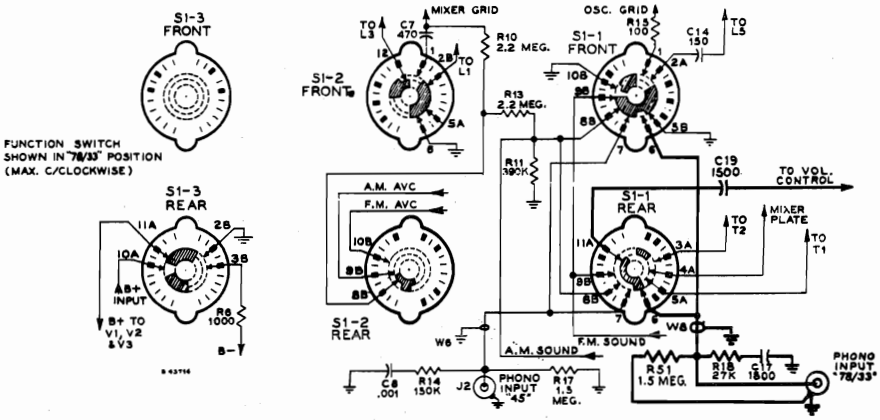

Switch Position Schematic Diagram—"Phono 78/33"

In "45" and "78/33" position the B+ supply voltage is disconnected in S1-3 which renders the mixer-oscillator, I. F. amplifier and driver tubes inoperative.

The bias resistor R6 (in parallel with R42 in AM and FM positions) is also disconnected in S1-3.

This results in higher grid, plate and screen voltages on the output tubes.

Record Changer Mounting

Each record changer is mounted in a roll-out carriage. The changer mechanisms are mounted on rubber grommets (45 r.p.m.) or springs (78/33 r.p.m.) and should be free floating.

Two shipping screws hold the 45 r.p.m. changer to its roll-out carriage. They are accessible from the under-side of the carriage and should be REMOVED at time of installation.

Two shipping screws hold the 78/33 r.p.m. changer to its roll-out carriage. They are accessible after the turntable is lifted off and should be LOOSENED at time of installation.

Roll-out Carriage Removal

Each roll-out carriage has two stop pins, (one at the back end of each slide) held in place by a retaining spring. To remove roll-out carriage, it is first necessary to pull the retaining springs out of the slides with a pair of long nose pliers, the stop pins are then easily removed. The roll-out carriage may then be removed from the front of the cabinet after disconnecting its connecting cables.

Roll-out Carriage Travel

The roll-out carriages have a normal movement limitation of approximately 10 inches. If a carriage does not have this amount of movement, it may be due to an obstruction or from slippage or creeping of the balls of the slide mechanism. Travel restriction due to slippage or creeping of balls in the slide mechanism can be corrected by exerting slightly greater pull until the normal travel limitation is reached. The carriage should then operate to its full travel with normal pull.

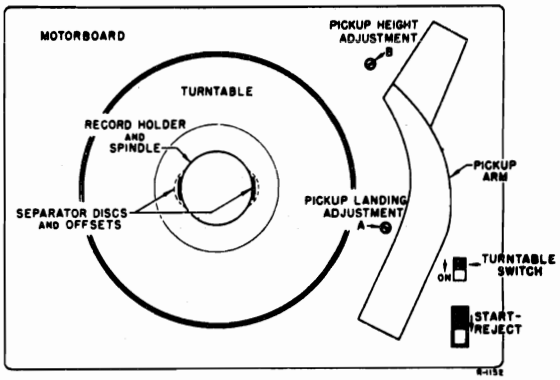

Top View—RP 168 Record Changer

Adjustments

1. PICKUP LANDING—Turn screw "A" slightly to right (clockwise) if landing is on music grooves, or to left if too near edge of record.

2. PICKUP HEIGHT—Turn screw "B" slightly to right (clockwise) if for change cycle pickup does not lift up from as many as ten records on turntable, or to left if when lifting, pickup hits records on spindle. Correct height is ¾" from turntable to pickup point at maximum.

©John F. Rider

Compliments of www.nucow.com

MODEL A-91,
Ch. RC-1095

Replacement Parts

STOCK NO.	DESCRIPTION
	CHASSIS ASSEMBLIES
	RC 1095
75599	Capacitor—Variable tuning capacitor complete with drive drum (C1-1, C1-2, C1-3, C1-4)
74733	Capacitor—Ceramic, 3 mmf. (C10)
75613	Capacitor—Ceramic, 5 mmf. (C13)
39044	Capacitor—Ceramic, 15 mmf. (C12)
75609	Capacitor—Ceramic, 47 mmf. (C45)
75612	Capacitor—Ceramic, 68 mmf. (C9, C11)
75437	Capacitor—Ceramic, 100 mmf. (C31)
75614	Capacitor—Ceramic, 150 mmf. (C14, C30, C43)
39640	Capacitor—Mica, 330 mmf. (C37, C38)
39644	Capacitor—Mica, 470 mmf. (C7)
75610	Capacitor—Ceramic, 1500 mmf. (C19)
74850	Capacitor—Ceramic, 1800 mmf. (C17)
73473	Capacitor—Ceramic, 5000 mmf. (C6, C15, C24, C25, C27, C28, C29, C34, C36)
73801	Capacitor—Tubular, paper, .001 mfd, 400 volts (C8)
70642	Capacitor—Tubular, paper, .001 mfd, 1000 volts (C42, C44)
71926	Capacitor—Tubular, paper, .005 mfd, 200 volts (C26, C39, C41)
73920	Capacitor—Tubular, paper, .005 mfd, 400 volts (C33)
71925	Capacitor—Tubular, paper, .01 mfd, 400 volts (C32)
58476	Capacitor—Tubular, paper, oil impregnated, .018 mfd, 400 volts (C21)
72120	Capacitor—Tubular, paper, .015 mfd, 200 volts (C22)
74010	Capacitor—Tubular, paper, .02 mfd, 400 volts (C20, C35)
73553	Capacitor—Tubular, paper, .05 mfd, 400 volts (C16)
73747	Capacitor—Electrolytic, 2 mfd, 500 volts (C40)
72052	Capacitor—Electrolytic, comprising 1 section of 30 mfd, 450 volts, 1 section of 30 mfd, 350 volts and 1 section of 40 mfd, 25 volts (C23A, C23B, C23C)
73935	Clip—Mounting clip for A-M, I-F transformers
75627	Clip—Clip for main cable—on rear of chassis
75569	Coil—Oscillator coil (A.M.) complete with adjustable screws
75617	Coil—Antenna coil—F-M (L1)
71942	Coil—Filament choke coil (L9)
74817	Coil—Oscillator coil—F-M (L8)
35787	Connector—Single contact female connector for pickup cables (J2, J3)
74879	Connector—2 contact female connector for antenna leads
75542	Connector—8 contact male connector for power input cable (J4)
75543	Connector—2 contact female connector for 45 RPM motor cable (P1)
70342	Control—Volume control and power switch (R22, S2)
75538	Control—Tone control (R34)
†72953	Cord—Drive cord (approx. 66" overall length required)
75564	Coupling—Spring coupling for function switch extension shaft
75556	Cover—Insulating cover for electrolytic capacitor #72052
74839	Fastener—Push fastener for mounting R-F shelf (4 required)
16058	Grommet—Rubber grommet for mounting R-F shelf (4 req'd)
75547	Grommet—Rubber grommet to mount slide mechanism to bottom—rear (2 req'd)
75548	Grommet—Rubber grommet to mount slide mechanism to bottom—front (2 req'd)
11765	Lamp—Dial lamp—Mazda #51
75544	Nut—Rivnut to fasten screw for mounting chassis (4 req'd)
18469	Plate—Bakelite mounting plate for electrolytic capacitor #72052
75535	Plate—Dial back plate complete with three (3) pulleys
75536	Pointer—Station selector pointer
72602	Pulley—Drive cord pulley
72323	Resistor—Wire wound, 3 ohms, ½ watt (R25)
73637	Resistor—Wire wound, 2200 ohms, 5 watts (R24)
	Resistor—Fixed, composition:—
	47 ohms, ±10%, ½ watt (R26)
	100 ohms, ±10%, ½ watt (R15, R38, R43)
	120 ohms, ±10%, ½ watt (R27)
	270 ohms, ±5%, 2 watts (R42)
	680 ohms, ±20%, ½ watt (R30)
	680 ohms, ±20%, 1 watt (R31)
	1000 ohms, ±10%, ½ watt (R6)
	1200 ohms, ±5%, ½ watt (R46)
	3300 ohms, ±5%, ½ watt (R40, R45)
	12,000 ohms, ±10%, 1 watt (R29)
	15,000 ohms, ±10%, ½ watt (R44)
	18,000 ohms, ±10%, ½ watt (R7, R20)
	22,000 ohms, ±10%, ½ watt (R28)
	27,000 ohms, ±10%, ½ watt (R18, R21)
	33,000 ohms, ±10%, ½ watt (R50)
	39,000 ohms, ±5%, ½ watt (R47)
	56,000 ohms, ±10%, ½ watt (R32)
	68,000 ohms, ±10%, ½ watt (R39)
	82,000 ohms, ±10%, ½ watt (R36)
	120,000 ohms, ±10%, ½ watt (R8, R16)
	150,000 ohms, ±10%, ½ watt (R14)
	270,000 ohms, ±10%, ½ watt (R35)
	390,000 ohms, ±10%, ½ watt (R11)
	470,000 ohms, ±10%, ½ watt (R37, R41, R48)
	1.5 megohm, ±10%, ½ watt (R17, R51)
	2.2 megohm, ±20%, ½ watt (R10, R13)
	10 megohm, ±20%, ½ watt (R23)
	22 megohm, ±20%, ½ watt (R33)
75540	Shaft—Tuning knob shaft
75565	Shaft—Extension shaft for function switch
73584	Shield—Tube shield for V5
75546	Slide—Slide mechanism complete for radio chassis bottom
31251	Socket—Tube socket, octal, wafer
73117	Socket—Tube socket, 7 pin, miniature
74179	Socket—Tube socket, 7 pin, miniature for 6J6 tube only
31364	Socket—Dial lamp socket
75563	Spring—Retaining spring for function switch extension shaft
74038	Spring—Drive cord spring
74847	Support—Polystyrene support for F-M oscillator coil complete with mounting bracket
75600	Switch—Function switch (S1-1, S1-2, S1-3)
75557	Transformer—Output transformer (T7)
73743	Transformer—Radio detector transformer (T5)
75558	Transformer—First I-F transformer (A-M) complete with adjustable cores (T2)
73037	Transformer—Second I-F transformer (A-M) complete with adjustable cores (T4)
75559	Transformer—First I-F transformer (F-M) complete with adjustable cores (T1)
75560	Transformer—Second I-F transformer (F-M) complete with adjustable cores (T3)
75566	Transformer—Power transformer, 117 volt, 60 cycle (T6)
33726	Washer—"C" washer for tuning knob shaft
	RADIO ROLLOUT CARRIAGE
75601	Decal—Function decal for controls
75572	Dial—Polystyrene dial scale
75549	Frame—Moulded frame (maroon) for mounting radio chassis and 45 RPM record changer—for mahogany or walnut instruments
75683	Frame—Moulded frame (light brown) for mounting radio chassis and 45 RPM record changer—for oak instruments
75551	Handle—Metal pullout handle for mounting frame
75555	Screw—#8-32 x ⅝" cross recessed pan head machine screw to mount radio chassis (4 req'd)
	SPEAKER ASSEMBLY
	Stamped 92569-12W
	RMA 274
	RL 111-A1
13867	Cap—Dust cap
75682	Cone—Cone and voice coil assembly (3.2 ohms)
75681	Speaker—12" P.M. speaker complete with cone and voice coil (3.2 ohms)
	NOTE: If stamping on speaker does not agree with above number, order replacement parts by referring to model number of instrument, number stamped on speaker and full description of part required.
	MISCELLANEOUS
71864	Antenna—F-M antenna
75705	Antenna—Antenna loop complete less cable
75898	Back—Back cover—maroon—for 33⅓/78 RPM record changer compartment—for mahogany or walnut instruments (assembled to rollout)
75899	Back—Back cover—light brown—for 33⅓/78 RPM record changer compartment—for oak instruments (assembled to rollout)
75900	Back—Back cover—Maroon—for radio—45 RPM record changer compartment—for mahogany or walnut instruments (assembled to rollout)
75901	Back—Back cover—light brown—for radio—45 RPM record changer compartment—for oak instruments (assembled to rollout)
73680	Board—"A-F-N" terminal board
75694	Bracket—Step bracket less rubber bumper for record changer rollouts
71599	Bracket—Pilot lamp bracket
75696	Bumper—Rubber bumper for record changer rollout stop bracket
74296	Cable—Shielded pickup cable complete with pin plug for 33⅓/78 RPM record changer
72437	Cable—Shielded pickup cable complete with pin plug for 45 RPM record changer
13103	Cap—Pilot lamp cap
71892	Catch—Bullet catch and strike for cabinet doors
X3093	Cloth—Grille cloth for oak instruments
X3189	Cloth—Grille cloth for mahogany or walnut instruments
74882	Connector—2 contact (polarized) male connector for antenna loop cable
74752	Connector—2 contact male connector for FM antenna cable
75709	Connector—8 contact female connector for main cable
75474	Connector—Single contact male connector for speaker (2 req'd)
30868	Connector—2 contact female connector for 33⅓/78 RPM record changer motor leads
74273	Decal—Trade mark decal (Victrola)
71984	Decal—Trade mark decal (RCA Victor)
74838	Grommet—Power cord strain relief (1 set)
37396	Grommet—Rubber grommet for mounting speaker
75697	Grommet—Rubber grommet for mounting 45 RPM record changer
75551	Handle—Metal pullout handle for 33⅓/78 RPM record changer compartment
74308	Hinge—Cabinet door hinge (1 set)
75712	Knob—Tuning control, tone control or volume control and power switch knob—maroon—for mahogany or walnut instruments
75713	Knob—Tuning control, tone control or volume control and power switch knob—for oak instruments
75714	Knob—Function switch knob—maroon—for mahogany or walnut instruments
75715	Knob—Function switch knob—tan—for oak instruments
11765	Lamp—Pilot lamp—Mazda #51
75917	Nail—Rosette head nail for grille (3 req'd)
75884	Nut—Speed nut for 33⅓/78 RPM record changer mounting screw
73634	Nut—Speed nut for speaker mounting screws
75916	Pull—Door pull
75907	Screw—#10-32 x 5¼" cross recessed round head special screw for mounting 45 RPM frame
75883	Screw—#10-24 x 2¼" round head machine screw for mounting 33⅓/78 RPM record changer
74279	Screw—#8-32 x ⅞" trimit head screw for door pull
75708	Shell—Shell for 8 contact female connector #75709
75546	Slide—Slide mechanism for 33⅓/78 RPM record mounting frame
31364	Socket—Pilot lamp socket and lead
74734	Spring—Retaining spring for knobs
75902	Spring—Suspension spring for main cable
72936	Stop—Cabinet door stop

† Stock No. 72953 is a reel containing 250 feet of cord.

©John F. Rider

Compliments of www.nucow.com

MODEL A-108,
Ch. RC-1096

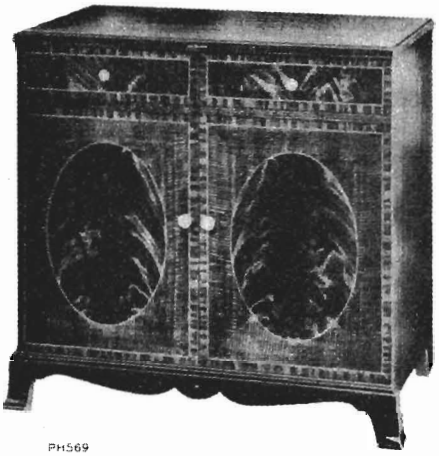

PH569

FOR RECORD CHANGER SERVICE INFORMATION REFER TO RP-168 SERIES SERVICE DATA OR RP-190 SERIES SERVICE DATA FOR 45 R.P.M. AND MODEL 960284 SERVICE DATA FOR 78/33⅓ R.P.M. on Pages RCD.CH.19-1, RCD.CH.21-1, and RCD.CH.21-34 respectively.

Specifications

Tuning Range

Standard Broadcast (AM) ..... 540-1,600 kc.
Frequency Modulation (FM) .....88-108 mc.
Intermediate Frequencies ..... AM—455 kc., FM—10.7 mc.

Tube Complement

(1) RCA 6CB6..... R-F Amplifier
(2) RCA 6J6..... Mixer and Oscillator
(3) RCA 6BA6..... I-F Amplifier
(4) RCA 6AU6..... Driver
(5) RCA 6AL5..... Ratio Detector
(6) RCA 6AV6..... AM Det.—AVC—A-F Amplifier
(7) RCA 6C4..... Ph. Inv.
(8) RCA 6V6GT..... Output
(9) RCA 6V6GT..... Output
(10) RCA 5Y3GT..... Rectifier

Dial Lamps (2).....Type No. 51, 6-8 volts, 0.2 amp.
Jewel Lamp .....Type No. 51, 6-8 volts, 0.2 amp.

Tuning Drive Ratio .....10:1 (5 turns of knob)

Power Supply Rating ..... 115 volts, 60 cycles, 115 watts

Loudspeaker (92569-12W)

Size and type ..... 12 in. PM
Voice coil impedance ..... 3.2 ohms at 400 cycles

Power Output

(Radio) Undistorted 8 watts.....Maximum 9 watts
(Phono.) Undistorted 10 watts..... Maximum 11 watts

Weight .....97 lbs.

Cabinet Dimensions

Height 32⅛ in. Width 34½ in. Depth 19¾ in.

Record Changer (RP-168 or RP-190-2)

Turntable speed ..... 45 r.p.m.
Pickup (RP-168—Stock No. 74625) (RP-190—Stock No. 75575) .....Crystal

Record Changer 960284-1 or -2)

Turntable speed .....78 or 33⅓ r.p.m.
Pickup (Stock No. 75475) ..... Crystal

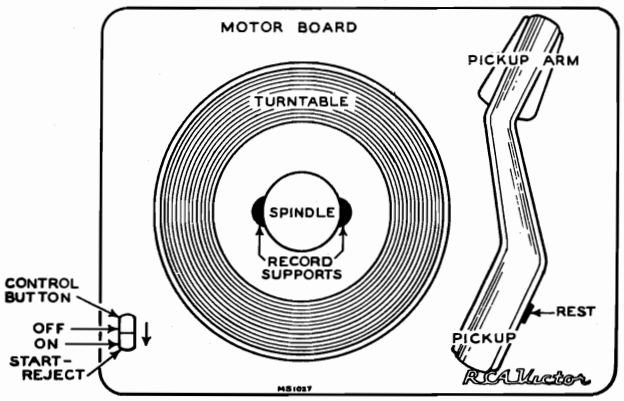

Top View—RP-190 Record Changer

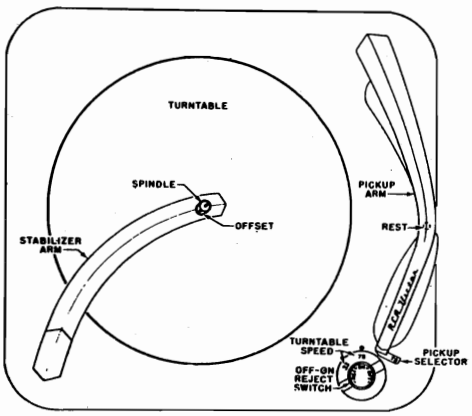

Top View—960284 Record Changer

©John F. Rider

Compliments of www.nucow.com

MODEL A-108,
Ch. RC-1096

ALIGNMENT PROCEDURE—CIRCUIT DESCRIPTION—LEAD DRESS

Alignment Procedure

CORRECT ALIGNMENT OF THE FM BAND REQUIRES THAT THE AM BAND BE ALIGNED FIRST

Alignment Indicators:

An RCA VoltOhmyst or equivalent meter is necessary for measuring developed d-c voltage during FM alignment. Connections are specified in the alignment tabulation. An output meter is also necessary to indicate minimum audio output during FM Ratio Detector alignment. Connect the output meter across the speaker voice coil.

The RCA VoltOhmyst can also be used as an AM alignment indicator, either to measure audio output or to measure a-v-c voltage.

When audio output is being measured the volume control should be turned to maximum.

Signal Generator:

For all alignment operations connect the low side of the signal generator to the receiver chassis. The output should be adjusted to provide accurate resonance indication at all times. If output measurement is used for AM alignment the output of the signal generator should be kept as low as possible to avoid a-v-c action.

Circuit Description

This instrument has a ten-tube (including rectifier) chassis which is very similar to those used in other RCA Victor radio-phonograph combinations designed for AM-FM reception.

The selector switch has five functions:

(1) Selection of tuning range.

(2) Selection and distribution of a.v.c. voltages.

(3) Application of B+ voltage to tubes.

In "Phono 78/33" and "Phono 45" positions the B+ voltage is removed from tubes V1, V2, V3 and V4.

(4) Selection of audio input applied to the volume control.

(5) Change in output tube bias.

In Radio positions R6 is in parallel with R42.

This receiver has built-in antennas for standard broadcast (AM) and frequency modulation (FM) reception.

Provision is made for the use of external antennas if desired.

Critical Lead Dress

Note: The leads listed may not be critical in all receivers. However, by dressing the leads as specified, unusual difficulties will be minimized.

1. The 2.2 meg mixer grid resistor (R10) should have a minimum practicable amount of lead extending on the grid end.
2. The first A.M. and first F.M. I.F. plate leads should be dressed away from the range switch wafer.
3. The ground strap between the R.F. shelf and the main chassis should be well soldered and kept as short as practicable.
4. Arrange wiring to prevent the filament wire between the mixer (6J6) and 1st I.F. (6BA6) tubes from passing near either the mixer grid, or the A.V.C. wiring.
5. Dress filament wires away from all audio coupling condensers.
6. Dress A.C. power switch wires away from the audio coupling condenser (C20) which is wired to the volume control.
7. Dress the mixer grid coupling condenser (C7) away from the lugs on the front range switch wafer.
8. The 1st I.F. tube A.V.C. by-pass condenser (C16) should ground at the same point as the cathode neutralizing loop.
9. The driver tube plate and screen by-pass condensers (C27, C28) should ground at the same point as the neutralizing loop.
10. The mixer plate by-pass condenser (C15) should ground as close to the R.F. shelf ground strap as practicable.
11. The shielded audio leads connecting to the front function switch wafer should have a minimum of exposed lead on the function switch end.

AM Alignment

FUNCTION SWITCH IN AM POSITION

Steps	Connect high side of sig. gen. to—	Sig. gen. output	Turn radio dial to—	Adjust for max. output
1	Stator of C1-4	455 KC	Quiet point at low freq. end.	† Bottom (sec.) & top (pri.) cores of T4 † Top (sec.) & bottom (pri.) cores of T2
2	AM ant. terminal thru 200 mmf.	1620 KC	Extreme high frequency end.	C1-2 trimmer (osc.)
3		1400 KC	1400 KC Signal	C1-4 trimmer (r. f.) C1-5 trimmer (ant.)
4		600 KC	600 KC Signal	‡ L5 (osc.) L7 (r. f.)
5	Repeat steps 2, 3 and 4			

† First peak T2 and T4 then starting with T4, use alternate loading. Connect a 47,000-ohm resistor across the primary to load the plate winding while the grid winding of the same transformer is being peaked. Then load the grid winding with the 47,000-ohm resistor while the plate winding is being peaked.

‡ With a 10,000-ohm resistor shunted across C1-4, peak the oscillator core L5, simultaneously "rocking" the gang condenser for maximum output. Then, remove the 10,000-ohm shunt resistor and peak L7 for maximum output.

FM Alignment

FUNCTION SWITCH IN FM POSITION—VOLUME CONTROL MAXIMUM

Steps	Connect high side of sig. gen. to—	Sig. gen. output	Turn radio dial to—	Adjust for max. output
1	Connect the d-c probe of a VoltOhmyst to the negative lead of the 2 mfd. capacitor C40 and the common lead to chassis. Adjust sig. gen. output to provide approx. —3 v. indication during alignment.			
2	Pin #1 of 6AU6 (V4) in series with .01 mf.	10.7 mc AM modulated	—	Top of driver trans. T5 for max. d-c voltage
3				† Bottom of driver trans. T5 for min. audio output
4	Repeat steps 2 and 3			
5	Thru 470 ohms to C1-3. Connect gnd. end of cable close to V2 cathode ground on r-f shelf	10.7 mc	88 mc	* Top (sec.) & bottom (pri.) cores of T3 * Top (sec.) & bottom (pri.) cores of T3
6	To FM antenna terminals thru 120 ohms in each side of line	90 mc	90 mc	L8 (osc.)
7		106 mc	106 mc Signal	C1-6 trimmer (ant.) and C1-3 trimmer (r. f.)
8		90 mc	90 mc Signal	L1 (ant.) and L2 (r. f.)
9	Repeat steps 6, 7 and 8			
10	Connect a sweep generator to the antenna terminals thru 120 ohms in each side of line. Connect an oscilloscope to junction of R44 and C41 to check response and linearity of FM band. Peak to peak separation should not be less than 180 kc.			

† Two or more points may be found which lower the audio output. At the correct point the minimum audio output is approached rapidly and is much lower than at any incorrect point.

* Use a 680 ohm resistor to load the plate winding while the grid winding of the same trans. is being peaked. Then the grid winding is loaded with the 680 ohm resistor while the plate winding is being peaked. When windings are loaded, it is necessary to increase the 10.7 mc input to maintain the —3 volts indication.

L8, L1 and L2 are adjustable by increasing or decreasing the spacing between turns. Oscillator signal tracks above signal frequency.

©John F. Rider

Compliments of www.nucow.com

MODEL A-108,
Ch. RC-1096

TUBE AND TRIMMER LOCATIONS—VOLTAGE DATA

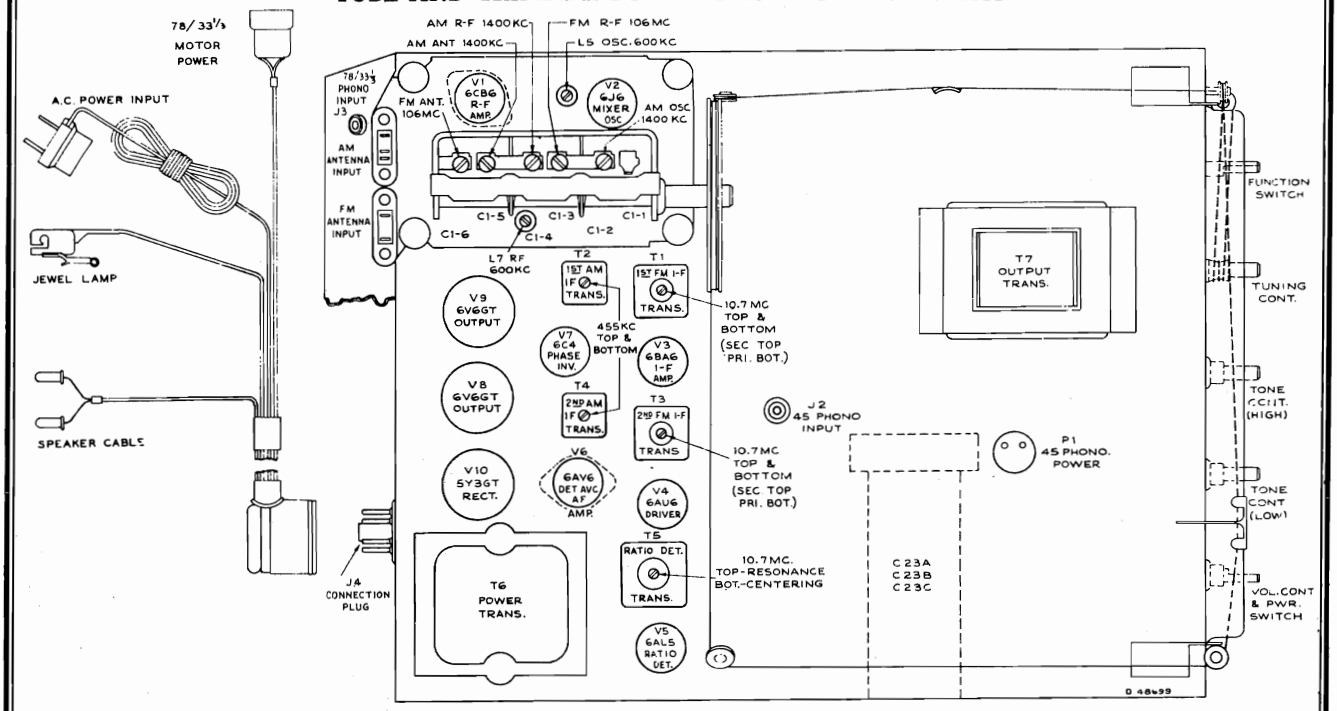

Tube and Trimmer Locations

Socket Voltages

Voltages measured with Chanalyst or VoltOhmyst and should hold within ±20% with rated line voltage. Tuning condenser closed—no signal input.

Tube	Terminal		Voltage		
			Phono	A.M.	F.M.
V1 6CB6 R.F. Amp.	Plate	5	—	203	132
	Screen	6	—	48	39
	Cathode	2	—	0.2	0.2
	Grid	1	—	–1.1	–0.9
V2 6J6 Mixer and Osc.	Plate	2	—	55	51
	Grid	5	—	–1.4	–1.2
	Plate	1	—	33	27
	Grid	6	—	–2.1	–1.9
V3 6BA6 I.F. Amp.	Plate	5	—	192	188
	Screen	6	—	106	101
	Cathode	7	—	0.9	
	Grid	1	—	–1.1	–0.35
V4 6AU6 Driver	Plate	5	—	186	180
	Screen	6	—	122	120
	Cathode	7	—	1.05	1.07
V5 6AL5 Ratio Det.	——	——	—	—	—
V6 6AV6 A.F. Amp.	Plate	7	112	94	94
	Grid	1	–0.7	–0.7	–0.7
V7 6C4 Ph. Inverter	Plate	1–5	125	87	85
	Grid	6	–19.2	–16	–16
	Cathode	7	–11.1	–11.4	–11.4
V8 6V6GT or Output V9	Plate	3	305	295	298
	Screen	4	299	208	204
	Grid	5	–19.2	–16	–16
V10 5Y36T Rectifier	Filament	2	314	313	313

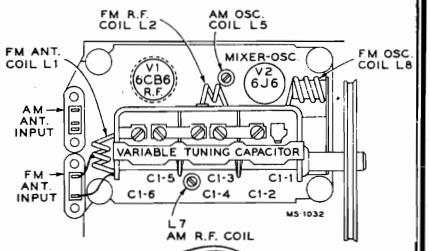

F. M. Coil Locations

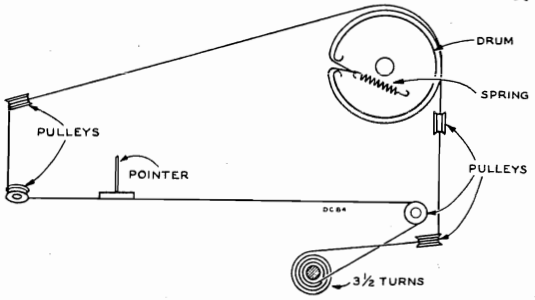

Dial Cord and Drive Assembly

Cathode Currents (Ma.)

Tube	Terminal	Phono	A.M.	F.M.
V1 6CB6	2	—	3	3
V2 6J6	7	—	2.6	2.6
V3 6BA6	7	—	13.2	14.7
V4 6AU6	7	—	9.3	9
V5 6AL5	1 & 5	—	—	—
V6 6AV6	2	0.8	0.5	0.5
V7 6C4	7	2.2	1.5	1.5
V8 6V6GT	8	35.6	17.8	17.7
V9 6V6GT	8	35.6	17.8	17.7
10 5Y3GT	2	74.2	73.6	74.2

©John F. Rider

Compliments of www.nucow.com

MODEL A-108,
Ch. RC-1096

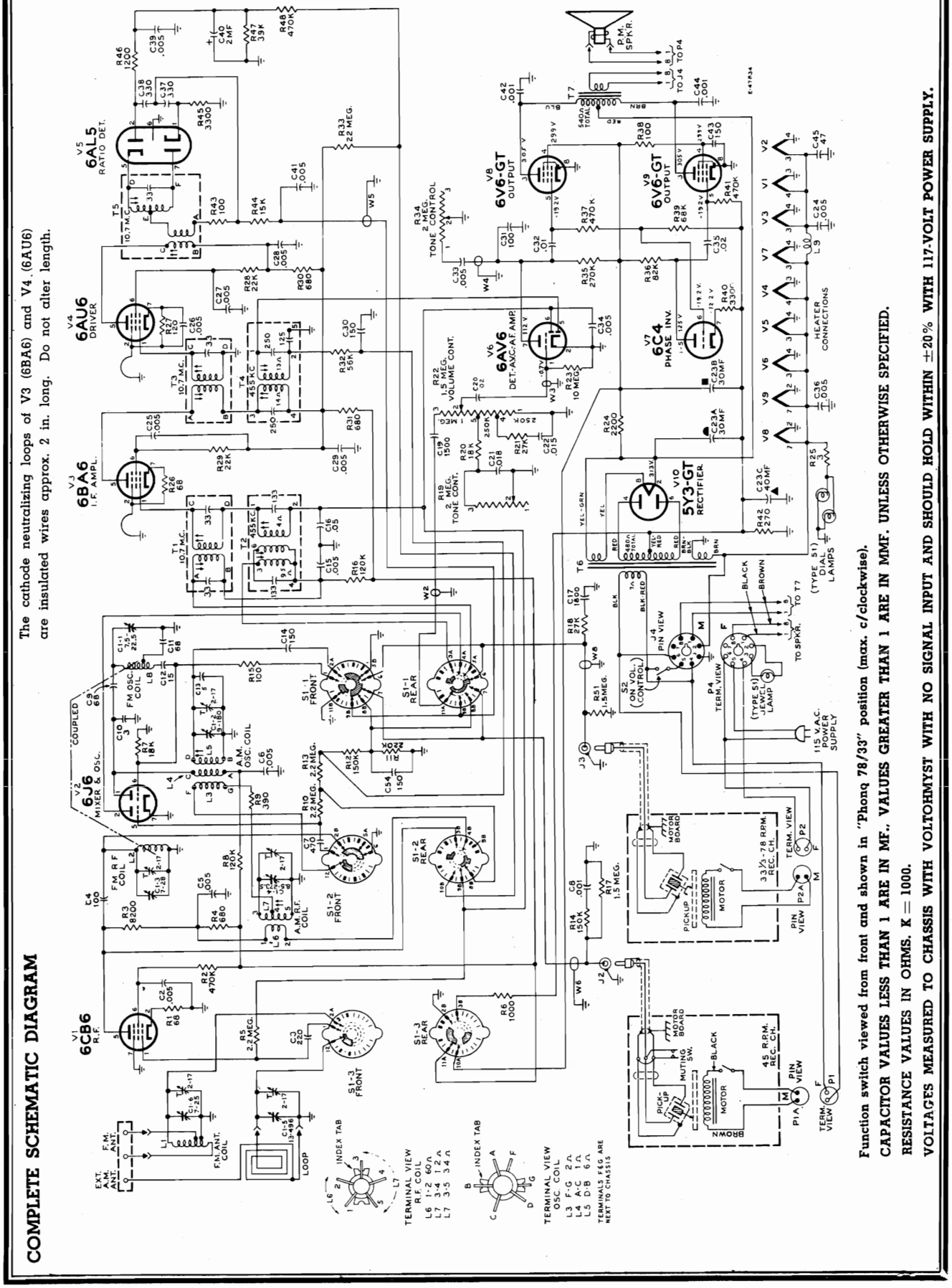

Function switch viewed from front and shown in "Phonq 78/33" position (max. c/clockwise).
CAPACITOR VALUES LESS THAN 1 ARE IN MF., VALUES GREATER THAN 1 ARE IN MMF. UNLESS OTHERWISE SPECIFIED.
RESISTANCE VALUES IN OHMS. K = 1000.
VOLTAGES MEASURED TO CHASSIS WITH VOLTOHMYST WITH NO SIGNAL INPUT AND SHOULD HOLD WITHIN ±20% WITH 117-VOLT POWER SUPPLY.

©John F. Rider

Compliments of www.nucow.com

MODEL A-108,
Ch. RC-1096

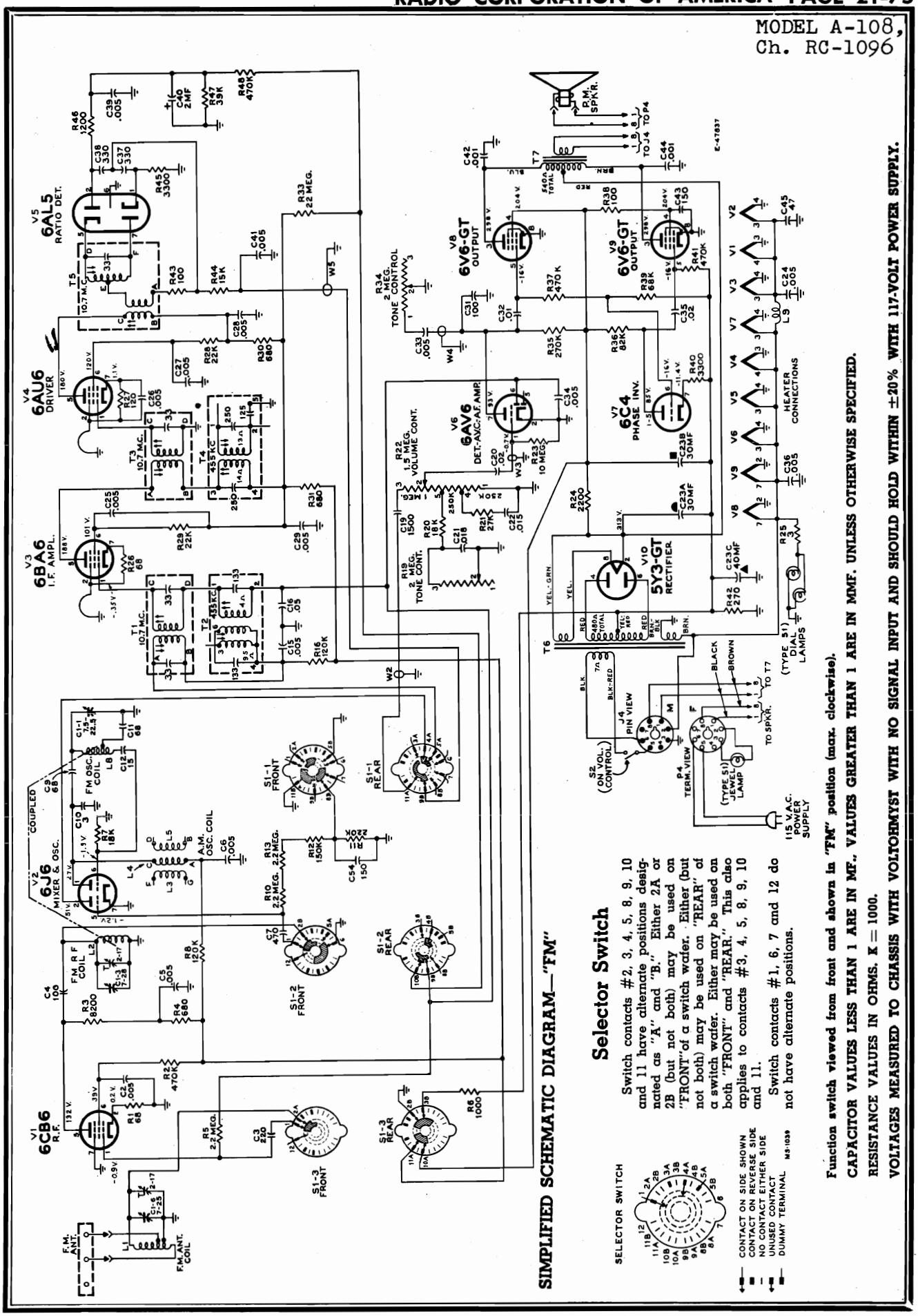

Selector Switch

Switch contacts #2, 3, 4, 5, 8, 9, 10 and 11 have alternate positions designated as "A" and "B." Either 2A or 2B (but not both) may be used on "FRONT" of a switch wafer. Either (but not both) may be used on "REAR" of a switch wafer. Either may be used on both "FRONT" and "REAR." This also applies to contacts #3, 4, 5, 8, 9, 10 and 11.

Switch contacts #1, 6, 7 and 12 do not have alternate positions.

Function switch viewed from front and shown in "FM" position (max. clockwise).

CAPACITOR VALUES LESS THAN 1 ARE IN MF., VALUES GREATER THAN 1 ARE IN MMF. UNLESS OTHERWISE SPECIFIED.

RESISTANCE VALUES IN OHMS. K = 1000.

VOLTAGES MEASURED TO CHASSIS WITH VOLTOHMYST WITH NO SIGNAL INPUT AND SHOULD HOLD WITHIN ±20% WITH 117-VOLT POWER SUPPLY.

©John F. Rider

Compliments of www.nucow.com

MODEL A-108,
Ch. RC-1096

SIMPLIFIED SCHEMATIC DIAGRAM—"AM"

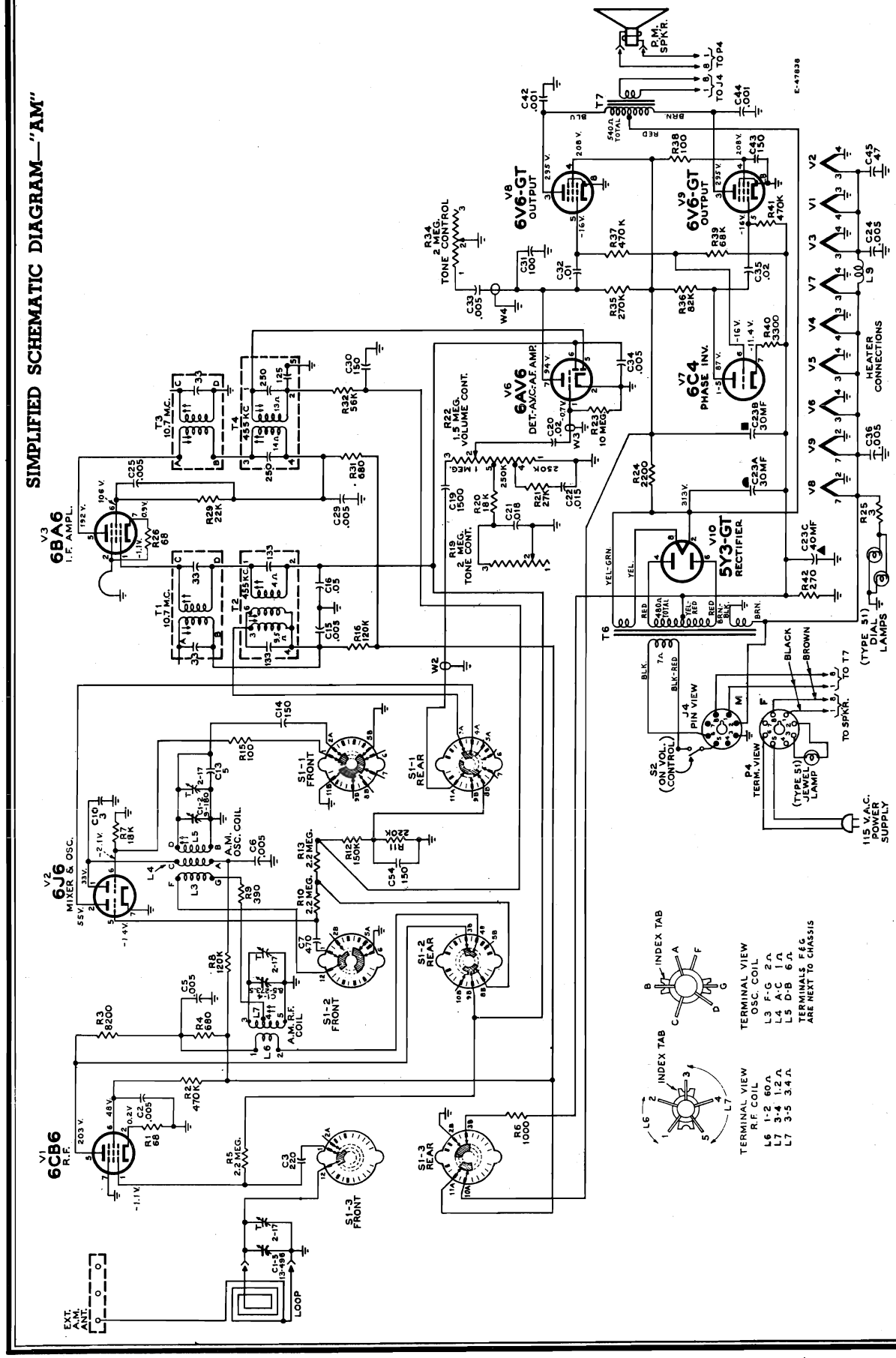

Function switch viewed from front and shown in "AM" position (#3 clockwise).

CAPACITOR VALUES LESS THAN 1 ARE IN MF. VALUES GREATER THAN 1 ARE IN MMF. UNLESS OTHERWISE SPECIFIED.

RESISTANCE VALUES IN OHMS. K = 1000.

VOLTAGES MEASURED TO CHASSIS WITH VOLTOHMYST WITH NO SIGNAL INPUT AND SHOULD HOLD WITHIN ±20% WITH 117-VOLT POWER SUPPLY.

©John F. Rider

Compliments of www.nucow.com

MODEL A-108,
Ch. RC-1096

SIMPLIFIED SCHEMATIC DIAGRAM—"45"

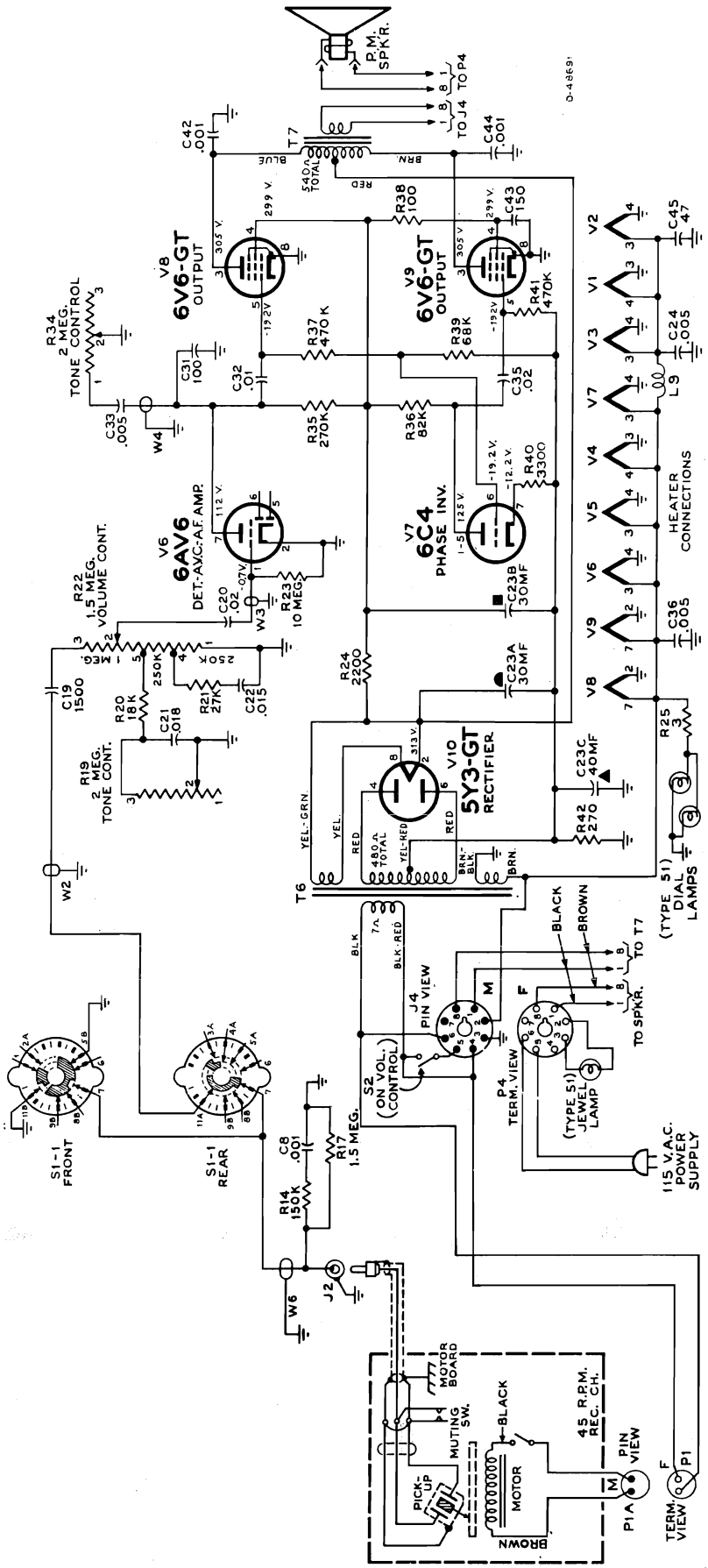

Note:

When the function switch is in "Phono 45" or "Phono 78/33" position the B+ supply voltage to tubes V1, V2, V3 and V4 is disconnected at switch section S1-3 rear. This results in higher plate and screen voltages on V6, V7, V8 and V9.

The bias resistor R6 (in parallel with R42 in AM and FM positions) is also disconnected at S1-3 rear. This results in higher grid bias voltage on V8 and V9.

FUNCTION SWITCH VIEWED FROM FRONT AND SHOWN IN "PHONO 45" POSITION (#2 CLOCKWISE).

CAPACITOR VALUES LESS THAN 1 ARE IN MF., VALUES GREATER THAN 1 ARE IN MMF. UNLESS OTHERWISE SPECIFIED.

RESISTANCE VALUES IN OHMS. K = 1000.

VOLTAGES MEASURED TO CHASSIS WITH VOLTOHMYST WITH NO SIGNAL INPUT AND SHOULD HOLD WITHIN ±20% WITH 117-VOLT POWER SUPPLY.

Simplified Schematic Diagram—"Phono 45"

©John F. Rider

Compliments of www.nucow.com

MODEL A-108,
Ch. RC-1096

SIMPLIFIED SCHEMATIC DIAGRAM—"78/33"

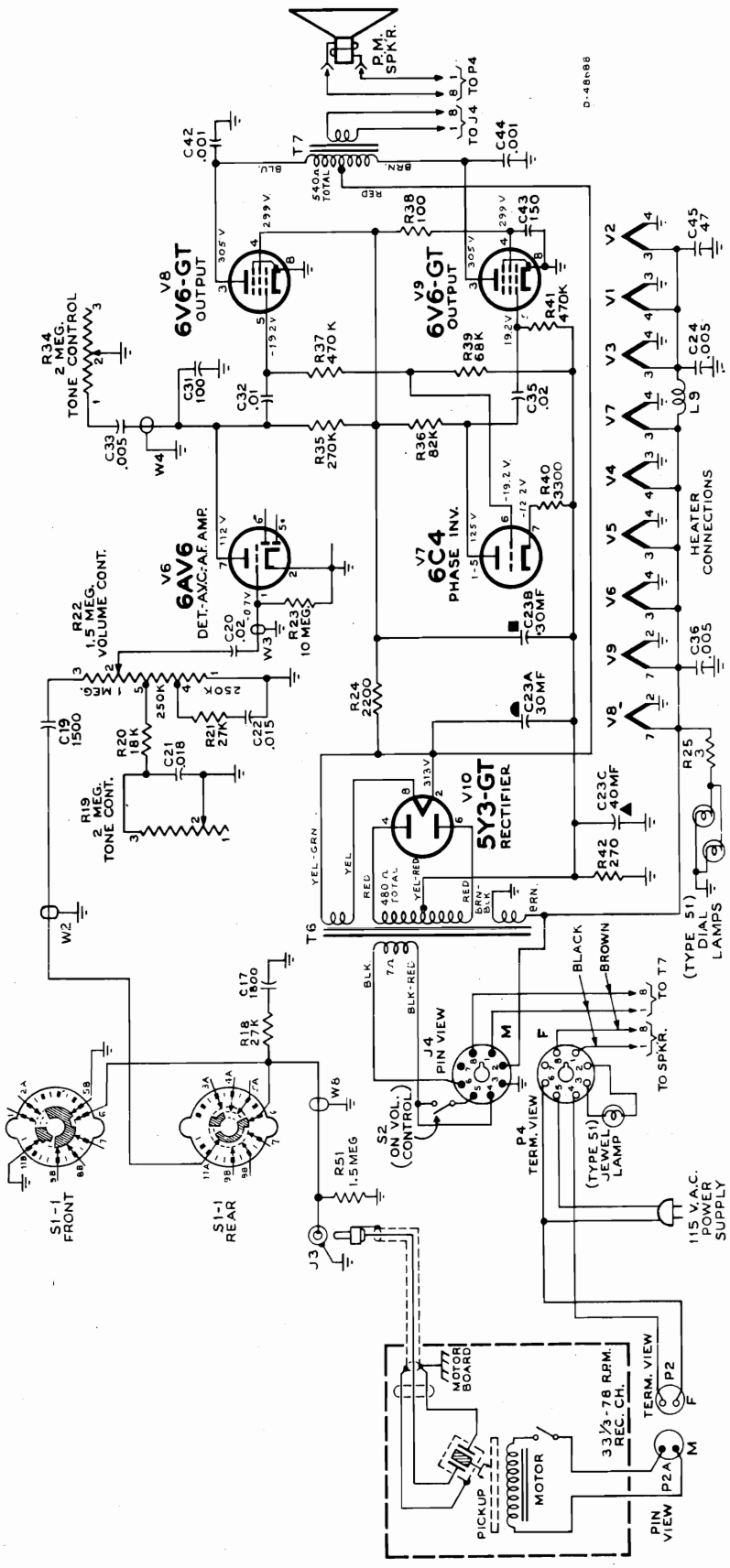

Note:

When the function switch is in "Phono 45" or "Phono 78/33" position the B+ supply voltage to tubes V1, V2, V3 and V4 is disconnected at switch section S1-3 rear. This results in higher plate and screen voltages on V6, V7, V8 and V9.

The bias resistor R6 (in parallel with R42 in AM and FM positions) is also disconnected at S1-3 rear. This results in higher grid bias voltage on V8 and V9.

FUNCTION SWITCH VIEWED FROM FRONT AND SHOWN IN "PHONO 78/33" POSITION (MAX. C/CLOCKWISE).

CAPACITOR VALUES LESS THAN 1 ARE IN MF., VALUES GREATER THAN 1 ARE IN MMF. UNLESS OTHERWISE SPECIFIED.

RESISTANCE VALUES IN OHMS. K = 1000.

VOLTAGES MEASURED TO CHASSIS WITH VOLTOHMYST WITH NO SIGNAL INPUT AND SHOULD HOLD WITHIN ±20% WITH 117-VOLT POWER SUPPLY.

Simplified Schematic Diagram—"Phono 78/33"

©John F. Rider

Compliments of www.nucow.com

MODEL A-108,
Ch. RC-1096

MISC. SERVICE INFORMATION—REPLACEMENT PARTS

Record Changer Mounting

Each record changer is mounted in a roll-out carriage. The changer mechanisms are mounted on rubber grommets (45 r.p.m.) or springs (78/33 r.p.m.) and should be free floating.

Two shipping screws hold the 45 r.p.m. changer to its roll-out carriage. They are accessible from the under-side of the carriage and should be REMOVED at time of installation.

Two shipping screws hold the 78/33 r.p.m. changer to its roll-out carriage. They are accessible after the turntable is lifted off and should be LOOSENED at time of installation.

Roll-out Carriage Removal

Each roll-out carriage has two stop pins, (one at the back end of each slide) held in place by retaining spring. To remove roll-out carriage, it is first necessary to pull the retaining springs out of the slides with a pair of long nose pliers, the stop pins are then easily removed. The roll-out carriage may then be removed from the front of the cabinet after disconnecting its connecting cables.

Roll-out Carriage Travel

The roll-out carriages have a normal movement limitation of approximately 10 inches. If they do not have this amount of movement, it may be due to an obstruction or from slippage or creeping of the balls of the slide mechanism. Travel restriction due to slippage or creeping of balls in the slide mechanism can be corrected by exerting slightly greater pull until the normal travel limitation is reached. The carriage should then operate to its full travel with normal pull.

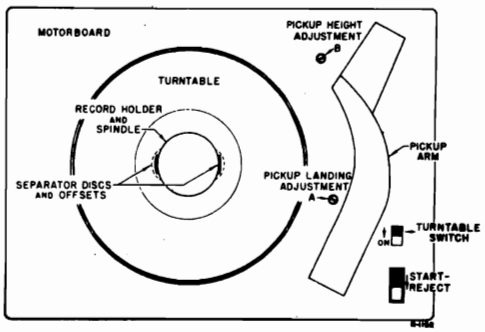

Top View—RP 168 Record Changer

Adjustments

1. PICKUP LANDING—Turn screw "A" slightly to right (clockwise) if landing is on music grooves, or to left if too near edge of record.

2. PICKUP HEIGHT—Turn screw "B" slightly to right (clockwise) if for change cycle pickup does not lift up from as many as ten records on turntable, or to left if when lifting, pickup hits records on spindle. Correct height is ¾" from turntable to pickup point at maximum.

Replacement Parts

STOCK NO.	DESCRIPTION
	CHASSIS ASSEMBLIES RC 1096
75567	Capacitor—Variable tuning capacitor complete with drive drum (C1-1, C1-2, C1-3, C1-4, C1-5, C1-6)
74733	Capacitor—Ceramic, 3 mmf. (C10)
75613	Capacitor—Ceramic, 5 mmf. (C13)
39044	Capacitor—Ceramic, 15 mmf. (C12)
75609	Capacitor—Ceramic, 47 mmf. (C45)
75612	Capacitor—Ceramic, 68 mmf. (C9, C11)
39396	Capacitor—Ceramic, 100 mmf. (C4)
75437	Capacitor—Ceramic, 100 mmf. (C31)
75614	Capacitor—Ceramic, 150 mmf. (C14, C30, C43, C54)
75611	Capacitor—Ceramic, 220 mmf. (C3)
39640	Capacitor—Mica, 330 mmf. (C37, C38)
39644	Capacitor—Mica, 470 mmf. (C7)
75610	Capacitor—Ceramic, 1500 mmf. (C19)
74850	Capacitor—Ceramic, 1800 mmf. (C17)
73473	Capacitor—Ceramic, 5000 mmf. (C2, C5, C6, C15, C24, C25, C27, C28, C29, C34, C36)
73801	Capacitor—Tubular, paper, .001 mfd, 400 volts (C8)
70642	Capacitor—Tubular, paper, .001 mfd, 1000 volts (C42, C44)
71926	Capacitor—Tubular, paper, .005 mfd, 200 volts (C26, C39, C41)
73920	Capacitor—Tubular, paper, .005 mfd, 400 volts (C33)
71925	Capacitor—Tubular, paper, .01 mfd, 400 volts (C32)
72120	Capacitor—Tubular, paper, .015 mfd, 200 volts (C22)
58476	Capacitor—Tubular, paper, oil impregnated, .018 mfd, 400 volts (C21)
74010	Capacitor—Tubular, paper, .02 mfd, 400 volts (C20, C35)
73553	Capacitor—Tubular, paper, .05 mfd, 400 volts (C16)
73747	Capacitor—Electrolytic 2 mfd, 50 volts (C40)
72052	Capacitor—Electrolytic comprising 1 section of 30 mfd, 450 volts, 1 section of 30 mfd, 350 volts and 1 section of 40 mfd, 25 volts (C23A, C23B, C23C)
73935	Clip—Mounting clip for A-M, I-F transformers
75627	Clip—Clip for main cable—on rear of chassis
75569	Coil—Oscillator coil (A-M) complete with adjustable core (L3, L4, L5)
75570	Coil—R.F. coil complete with adjustable core (L6, L7)
71942	Coil—Filament choke coil (L9)
75615	Coil—Antenna coil—F-M (L1)
74815	Coil—R.F. coil—F-M (L2)
74817	Coil—Oscillator coil—F-M (L8)
35787	Connector—Single contact female connector for phono cables (J2, J3)
75542	Connector—8 contact male connector for power input cable (J4)
75543	Connector—2 contact female connector for 45 RPM motor cable (P1)
74879	Connector—2 contact female connector for antenna leads
75537	Control—Volume control and power switch (R22, S2)
75561	Control—Tone control—L.F. (R19)
75562	Control—Tone control—H.F. (R34)
†72953	Cord—Drive cord (approx. 66" overall length required)
75564	Coupling—Spring coupling for function switch extension shaft
75556	Cover—Insulating cover for electrolytic capacitor #72052
74839	Fastener—Push fastener for mounting R.F. shelf (4 req'd)
16058	Grommet—Rubber grommet for mounting R.F. shelf (4 req'd)
75547	Grommet—Rubber grommet to mount slide mechanism to bottom—rear (2 req'd)
75548	Grommet—Rubber grommet to mount slide mechanism to bottom—front (2 req'd)
11765	Lamp—Dial lamp—Mazda 51
75544	Nut—Rivnut to fasten screw for mounting chassis (4 req'd)
18469	Plate—Bakelite mounting plate for electrolytic capacitor #72052
75535	Plate—Dial back plate complete with three (3) pulleys
75536	Pointer—Station selector indicator
72602	Pulley—Drive cord pulley
72323	Resistor—Wire wound, 3 ohms, ½ watt (R25)
73637	Resistor—Wire wound, 2200 ohms, 5 watts (R24)
	Resistor—Fixed, composition:—
	68 ohms, ±10%, ½ watt, (R1, R26)
	100 ohms, ±10%, ½ watt (R15, R38, R43)
	120 ohms, ±10%, ½ watt (R27)
	270 ohms, ±5%, 2 watts (R42)
	390 ohms, ±10%, ½ watt (R9)
	680 ohms, ±10%, ½ watt (R4)
	680 ohms, ±20%, ½ watt (R30, R31)
	1000 ohms, ±10%, ½ watt (R6)
	1200 ohms, ±5%, ½ watt (R46)
	3300 ohms, ±5%, ½ watt (R40, R45)
	8200 ohms, ±10%, 1 watt (R3)
	15,000 ohms, ±10%, ½ watt (R44)
	18,000 ohms, ±10%, ½ watt (R7, R20)
	22,000 ohms, ±10%, ½ watt (R28, R29)
	27,000 ohms, ±10%, ½ watt (R18, R21)

† Stock No. 72953 is a reel containing 250 feet of cord.

©John F. Rider

Compliments of www.nucow.com

MODEL A-108,
Ch. RC-1096

Replacement Parts—Concluded

STOCK NO.	DESCRIPTION
	39,000 ohms, ±5%, ½ watt (R47)
	56,000 ohms, ±10%, ½ watt (R32)
	68,000 ohms, ±10%, ½ watt (R39)
	82,000 ohms, ±10%, ½ watt (R36)
	120,000 ohms, ±10%, ½ watt (R8, R16)
	150,000 ohms, ±10%, ½ watt (R12, R14)
	220,000 ohms, ±20%, ½ watt (R11)
	270,000 ohms, ±10%, ½ watt (R35)
	470,000 ohms, ±10%, ½ watt (R2, R37, R41, R48)
	1.5 megohm, ±10%, ½ watt (R17, R51)
	2.2 megohm, ±20%, ½ watt (R5, R10, R13)
	10 megohm, ±20%, ½ watt (R23)
	22 megohm, ±20%, ½ watt (R33)
75540	Shaft—Tuning knob shaft
75565	Shaft—Extension shaft for function switch
73584	Shield—Tube shield for V1 and V6
75546	Slide—Slide mechanism complete for radio chassis bottom
31251	Socket—Tube socket, octal, wafer
73117	Socket—Tube socket, 7 pin, miniature
74179	Socket—Tube socket, 7 pin, miniature for 6CB6 and 6J6 tubes only.
31364	Socket—Dial lamp socket
75563	Spring—Retaining spring for function switch extension shaft
74038	Spring—Drive cord spring
74847	Support—Polystyrene support for F-M oscillator coil complete with mounting bracket
75602	Switch—Function switch (S1-1, S1-2, S1-3)
75557	Transformer—Ouput transformer (T7)
73743	Transformer—Ratio detector transformer (T5)
75558	Transformer—First I-F transformer (A-M) complete with adjustable cores (T2)
73037	Transformer—Second I-F transformer (A-M) complete with adjustable cores (T4)
75559	Transformer—First I-F transformer (F-M) complete with adjustable cores (T1)
75560	Transformer—Second I-F transformer (F-M) complete with adjustable cores (T3)
75566	Transformer—Power transformer, 117 volts, 60 cycle (T6)
33726	Washer—"C" washer for tuning knob shaft
	RADIO ROLLOUT CARRIAGE
75603	Decal—Function decal for controls
75572	Dial—Polystyrene dial scale
75571	Frame—Moulded frame (maroon) for mounting radio chassis and 45 RPM record changer—for mahogany or walnut instruments
75684	Frame—Moulded frame (light brown) for mounting radio chassis and 45 RPM record changer—for oak instruments
75551	Handle—Metal pullout handle for mounting frame.
75555	Screw—#8-32 x ⅝" cross recessed pan head machine screw to mount radio chassis (4 req'd)
	SPEAKER ASSEMBLY
	Stamped 92569--12W RMA 274
	RL 111-A1
13867	Cap—Dust cap
75682	Cone—Cone and voice coil assembly (3.2 ohms)
75681	Speaker—12" P.M. speaker complete with cone and voice coil (3.2 ohms)
	NOTE:—If stamping on speaker does not agree with above number, order replacement parts by referring to model number of instrument, number stamped on speaker and full description of part required.

STOCK NO.	DESCRIPTION
	MISCELLANEOUS
71864	Antenna—F-M antenna
75705	Antenna—Antenna loop complete less cable
75898	Back—Back cover—maroon—for 33⅓/78 RPM record changer compartment—for mahogany or walnut instruments (assembled to rollout)
75899	Back—Back cover—light brown—for 33⅓/78 RPM record changer compartment—for oak instruments (assembled to rollout)
75903	Back—Back cover—maroon—for radio—45 RPM record changer compartment—for mahogany or walnut instruments (assembled to rollout)
75904	Back—Back cover—light brown—for radio—45 RPM record changer compartment—for oak instruments (assembled to rollout)
73680	Board—"A—F-M" terminal board
75694	Bracket—Stop bracket (less rubber bumper) for rollouts
71599	Bracket—Pilot lamp bracket
75696	Bumper—Rubber bumper for record changer rollout stop bracket
75919	Button—Rosette button for speaker grille
74296	Cable—Shielded pickup cable complete with pin plug for 33⅓/78 RPM record changer
72437	Cable—Shielded pickup cable complete with pin plug for 45 RPM record changer
13103	Cap—Pilot lamp cap
71892	Catch—Bullet catch and strike for cabinet door
X3144	Cloth—Grille cloth for mahogany or walnut instruments
X3089	Cloth—Grille cloth for oak instruments
74882	Connector—2 contact (polarized) male connector for antenna loop cable
74752	Connector—2 contact male connector for FM antenna terminal board cable
75709	Connector—8 contact female connector for main cable (less shell) (P4)
30868	Connector—2 contact female connector for 33⅓/78 RPM record changer motor cable (P2)
75474	Connector—Single contact male connector for speaker cable (2 req'd)
71894	Decal—Trade mark decal (RCA Victor)
74273	Decal—Trade mark decal (Victrola)
74838	Grommet—Power cord strain relief (1 set)
37396	Grommet—Rubber grommet for mounting speaker
75697	Grommet—Rubber grommet for mounting 45 RPM changer
75551	Handle—Metal pullout handle for 33⅓/78 RPM record changer mounting frame
74308	Hinge—Cabinet door hinge (1 set)
75712	Knob—Tuning control, tone control or volume control and power switch knob—maroon—for mahogany or walnut instruments
75713	Knob—Tuning control, tone control or volume control and power switch knob—tan—for oak instruments
75714	Knob—Function switch knob—maroon—for mahogany or walnut instruments
75715	Knob—Function switch knob—tan—for oak instruments
11765	Lamp—Pilot lamp—Mazda #51
75884	Nut—Speed nut for 33⅓/78 RPM record changer mounting screw
73634	Nut—Speed nut for speaker mounting screw.
75438	Pull—Door pull for upper part of door
75918	Pull—Door pull for center of door
75907	Screw—#10-32 x 5¼" cross recessed round head special screw to mount 45 RPM record changer
75883	Screw—#10-24 x ½" round head machine screw for mounting 33⅓/78 RPM record changer
75626	Screw—#8-32 x 1¼" trimit head screw for door pull.
75708	Shell—Shell for 8 contact female connector #75709
75546	Slide—Slide mechanism for 33⅓/78 RPM record changer mounting frame
31364	Socket—Pilot lamp socket and lead
74734	Spring—Retaining spring for knobs
75902	Spring—Suspension spring for main cable
72936	Stop——Cabinet door stop

©John F. Rider

Compliments of www.nucow.com

MODEL 45-W-9,
Ch. RC-1095-A

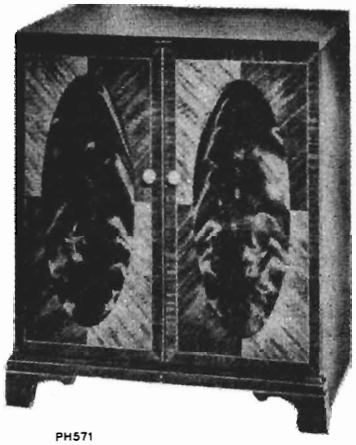

PH571

FOR RECORD CHANGER SERVICE INFORMATION REFER TO RP 190 SERIES SERVICE DATA. on Pages RCD.CH.21-1 through RCD.CH.21-11.

Specifications

Tuning Range

Standard Broadcast (AM) ..... 540-1,600 kc.
Frequency Modulation (FM) ..... 88-108 mc.
Intermediate Frequencies..... AM—455 kc., FM—10.7 mc.

Tube Complement

(1) RCA 6J6..... Mixer and Oscillator
(2) RCA 6BA6..... I-F Amplifier
(3) RCA 6AU6 ..... Driver
(4) RCA 6AL5 ..... Ratio Detector
(5) RCA 6AV6..... AM Det.—AVC—A-F Amplifier
(6) RCA 6C4 ..... Ph. Inv.
(7) RCA 6V6GT..... Output
(8) RCA 6V6GT..... Output
(9) RCA 5Y3GT..... Rectifier

Dial Lamps (2)..... Type No. 51, 6-8 volts, 0.2 amp.
Jewel Lamp..... Type No. 51, 6-8 volts, 0.2 amp.

Circuit Description

This instrument has a nine-tube (including rectifier) chassis which is very similar to those used in other RCA Victor radio-phonograph combinations designed for AM-FM reception.

The selector switch has five functions:

(1) Selection of tuning range.
(2) Selection and distribution of a.v.c. voltages.
(3) Application of B+ voltage to tubes V1, V2 and V3.
In "Phono" and "Aux." positions, the B+ voltage is removed from tubes V1, V2 and V3.
(4) Selection of audio input applied to the volume control.
(5) Change in output tube bias.
In "Radio" positions, R6 is in parallel with R42.

This receiver has built-in antennas for standard broadcast (AM) and frequency modulation (FM) reception. Provision is made for the use of external antennas if desired.

Tuning Drive Ratio..... 10:1 (5 turns of knob)

Power Supply Rating..... 115 volts, 60 cycles, 95 watts

Loudspeaker (92569-12W)

Size and type..... 12 in. PM
Voice coil impedance..... 3.2 ohms at 400 cycles

Power Output

(Radio) Undistorted 8 watts..... Maximum 9 watts
(Phono) Undistorted 10 watts.....Maximum 11 watts

Cabinet Dimensions

Height 32 in. Width 29¼ in. Depth 19¾ in.
Weight..... 90 lbs.

Record Changer (RP 190-2)

Turntable speed..... 45 r.p.m.
Record capacity..... 12 RCA 7-in. fine groove records
Pickup (Stock No. 75575)..... Crystal (medium output)

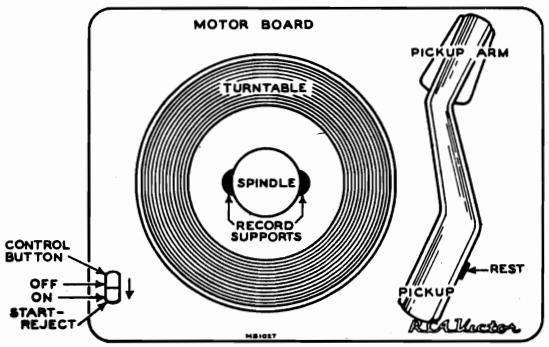

Top View—RP 190 Record Changer

©John F. Rider

Compliments of www.nucow.com

MODEL 45-W-9,
Ch. RC-1095-A

ALIGNMENT PROCEDURE — LEAD DRESS

Alignment Procedure

CORRECT ALIGNMENT OF THE FM BAND REQUIRES THAT THE AM BAND BE ALIGNED FIRST

Alignment Indicators:

An RCA VoltOhmyst or equivalent meter is necessary for measuring developed d-c voltage during FM alignment. Connections are specified in the alignment tabulation. An output meter is also necessary to indicate minimum audio output during FM Ratio Detector alignment. Connect the output meter across the speaker voice coil.

The RCA VoltOhmyst can also be used as an AM alignment indicator, either to measure audio output or to measure a-v-c voltage.

When audio output is being measured the volume control should be turned to maximum.

Critical Lead Dress

The items listed below may not appear to be critical in all receivers. However, by dressing the leads as specified it is believed that difficulties will be minimized.

1. The 2.2 meg mixer grid (R10) resistor should have a minimum practicable amount of lead extending on the grid end.
2. The first A.M. and first F.M. I.F. plate leads should be dressed away from the range switch wafer.
3. The ground strap between the R.F. shelf and the main chassis should be well soldered and kept as short as practicable.
4. Arrange wiring to prevent the filament wire between the mixer (6J6) and 1st I.F. (6BA6) tubes from passing near either the mixer grid, or the A.V.C. wiring.
5. Dress filament wires away from the 1st audio (6AV6) and inverter (6C4) tube audio coupling condensers.
6. Dress A.C. power switch wires away from the audio coupling condenser (C20) which is wired to the volume control.
7. Dress the mixer grid coupling condenser (C7) away from the lugs on the front range switch wafer.
8. The 1st I.F. tube A.V.C. by-pass condenser (C16) should ground at the same point as the cathode neutralizing loop.
9. The driver tube plate and screen by-pass condensers (C26, C27) should ground at the same point as the neutralizing loop.
10. The mixer plate by-pass condenser (C15) should ground as close to the R.F. shelf ground strap as practicable.
11. The shielded audio leads connecting to the front function switch wafer should have a minimum of exposed lead on the function switch end.

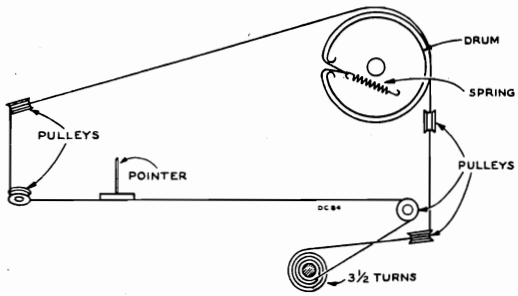

Dial Indicator and Drive Mechanism

Signal Generator:

For all alignment operations connect the low side of the signal generator to the receiver chassis. The output should be adjusted to provide accurate resonance indication at all times. If output measurement is used for AM alignment the output of the signal generator should be kept as low as possible to avoid a-v-c action.

AM Alignment

FUNCTION SWITCH IN AM POSITION

Steps	Connect high side of sig. gen. to—	Sig. gen. output	Turn radio dial to	Adjust for max. output
1	Stator of C1-4 in series with .01 mf.	455 kc	Quiet point at low freq. end.	†Bottom (sec.) and top (pri.) cores of T4. †Top (sec.) and bottom (pri.) cores of T2.
2	AM ant. terminal through 200 mmf.	1620 kc	Extreme high frequency end.	C1-2 trimmer (osc.).
3		1400 kc.	1400 kc signal.	C1-4 trimmer (ant.).
4		600 kc.	600 kc. signal.	L5 (osc.). Rock gang.
5	Repeat steps 2, 3 and 4.			

†First peak T2 and T4 then starting with T4, use alternate loading. Connect a 47,000-ohm resistor across the primary to load the plate winding while the grid winding of the same transformer is being peaked. Then load the grid winding with the 47,000-ohm resistor while the plate winding is being peaked.

FM Alignment

RANGE SWITCH IN FM POSITION — VOLUME CONTROL MAXIMUM

Steps	Connect high side of sig. gen. to—	Sig. gen. output	Turn radio dial to—	Adjust for peak output
1	Connect the d-c probe of a VoltOhmyst to the negative lead of the 2 mfd. capacitor C40 and the common lead to chassis. Adjust sig. gen. output to provide approx. —3 v. indication during alignment.			
2	Pin No. 1 of 6AU6 (V3) in series with .01 mf.	10.7 mc. AM modulated.	——	Top of driver trans. T5 for max. d.c. voltage.
3				†Bottom of driver trans. T5 for min. audio output.
4	Repeat steps 2 and 3.			
5	To FM antenna terminals thru 120 ohms in each side of line.	10.7 mc.	Low frequency end.	*Top (sec.) and bottom (pri.) cores of T3. *Top (sec.) and bottom (pri.) cores of T1.
6		90 mc.	90 mc.	**L8 (osc.).
7		106 mc.	106 mc.	C1-3 trimmer (ant.).
8		90 mc.	90 mc. signal.	**L1 (ant.). Rock gang.
9	Repeat steps 7 and 8.			

†Two or more points may be found which lower the audio output. At the correct point the minimum audio output is approached rapidly and is much lower than at any incorrect point.

*Align T3 and T1 by means of alternate loading as explained under AM alignment. Use a 680-ohm resistor instead of a 47,000-ohm resistor and load the FM windings.

**L1 and L8 are adjustable by increasing or decreasing the spacing between turns.

©John F. Rider

Compliments of www.nucow.com

MODEL 45-W-9,
Ch. RC-1095-A

TUBE AND TRIMMER LOCATIONS—VOLTAGE DATA

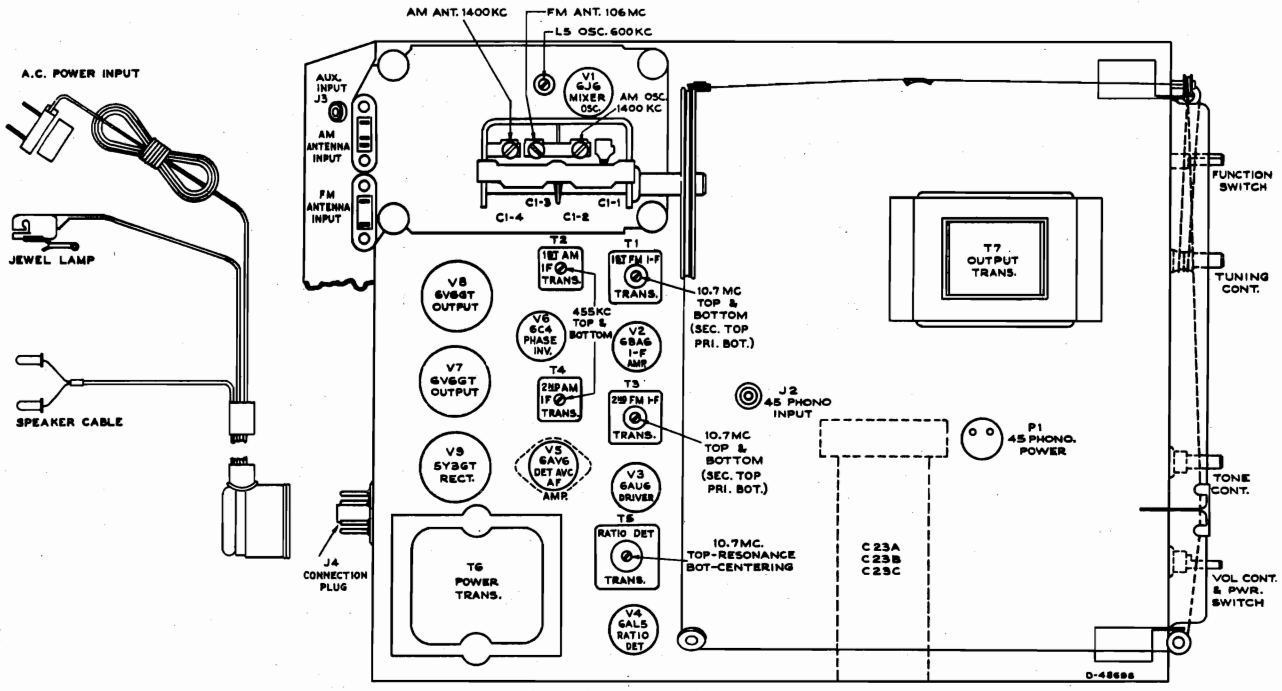

Tube and Trimmer Locations

Socket Voltages

Voltages measured to chassis with VoltOhmyst with no signal input and should hold within ±10% with 117 volt power supply.

Tube	Terminal	Voltage		
		Phono	AM	FM
V1 6J6 Mixer and Oscillator	Plate 2	—	58	53
	Grid 5	—	-1.5	-1.3
	Plate 1	—	35	29
	Grid 6	—	-2.2	-2.0
V2 6BA6 I.F. Amp.	Plate 5	—	197	193
	Screen 6	—	112	104
	Cathode 7	—	0.67	0.77
	Grid 1	—	-1.2	-0.35
V3 6AU6 Driver	Plate 5	—	193	189
	Screen 6	—	125	123
	Cathode 7	—	1.1	1.1
V4 6AL5 Ratio Det.	—— —	—	—	—
V5 6AV6 A. F. Amp.	Plate 7	112	95	95
	Grid 1	-0.7	-0.7	
V6 6C4 Ph. Inv.	Plate 1-5	125	90	90
	Cathode 7	-12.2	-11	-11
	Grid 6	-19.2	-15.6	-15.6
V7 6V6GT or Output V8	Plate 3	305	295	295
	Screen 4	299	214	212
	Grid 5	-19.2	-15.4	-15.4
V9 5Y3GT Rectifier	Filament 2	314	301	301

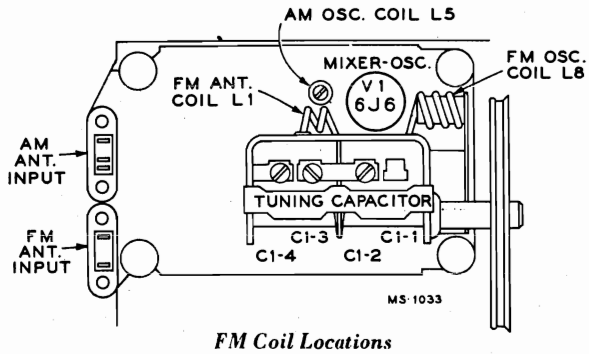

FM Coil Locations

Cathode Currents (Ma.)

Tube	Terminal	Phono	AM	FM
V1 6J6	7	—	2.8	2.8
V2 6BA6	7	—	16.6	16.5
V3 6AU6	7	—	9.4	9.3
V4 6AL5	1 & 5	—	—	—
V5 6AV6	2	0.8	0.5	0.5
V6 6C4	7	2.2	1.5	1.5
V7 6V6GT	8	35.6	18.6	18.5
V8 6V6GT	8	35.6	18.6	18.5
V9 5Y3GT	2	74.2	72.5	71.7

©John F. Rider

Compliments of www.nucow.com

MODEL 45-W-9,
Ch. RC-1095-A

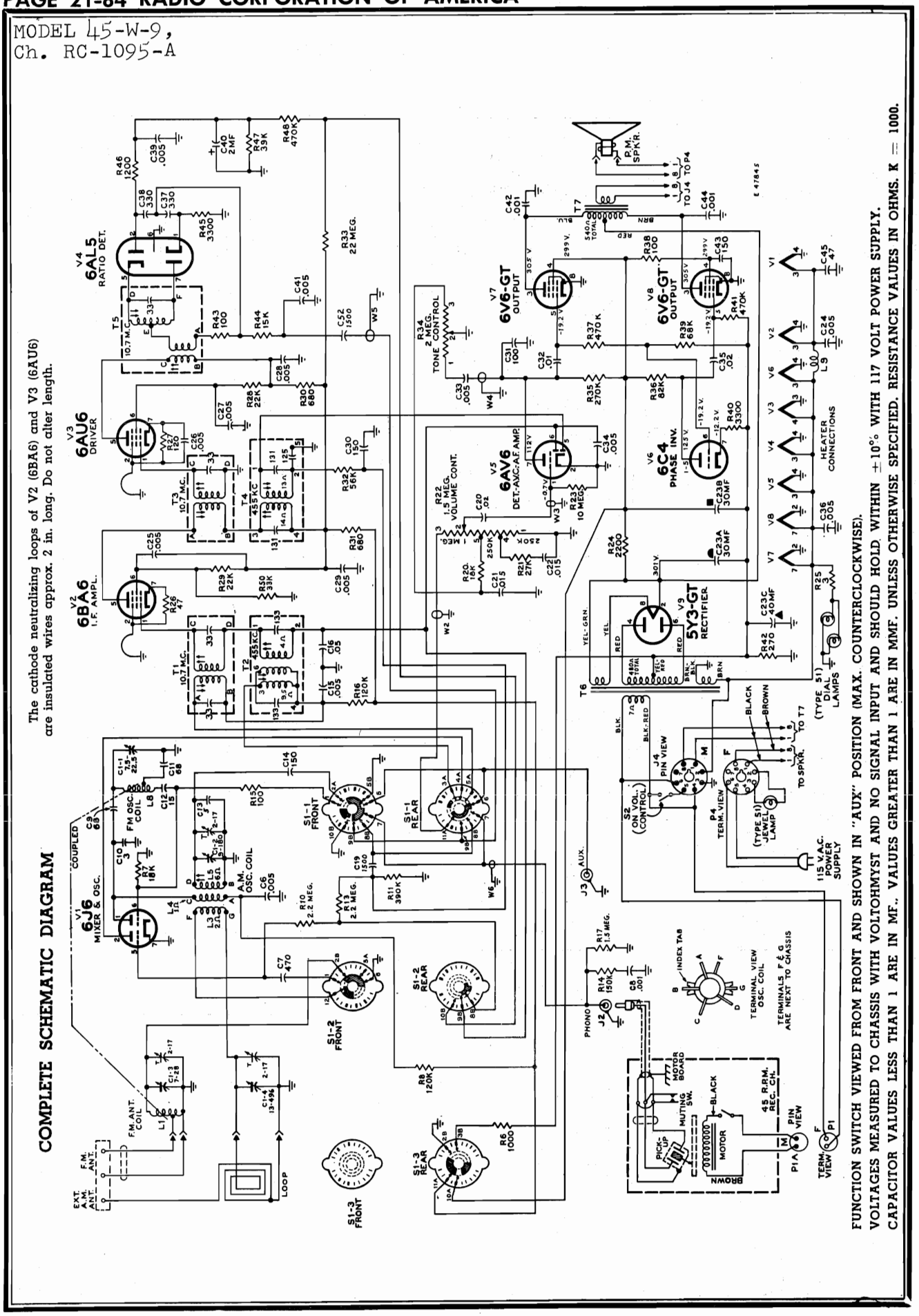

©John F. Rider

Compliments of www.nucow.com

MODEL 45-W-9,
Ch. RC-1095-A

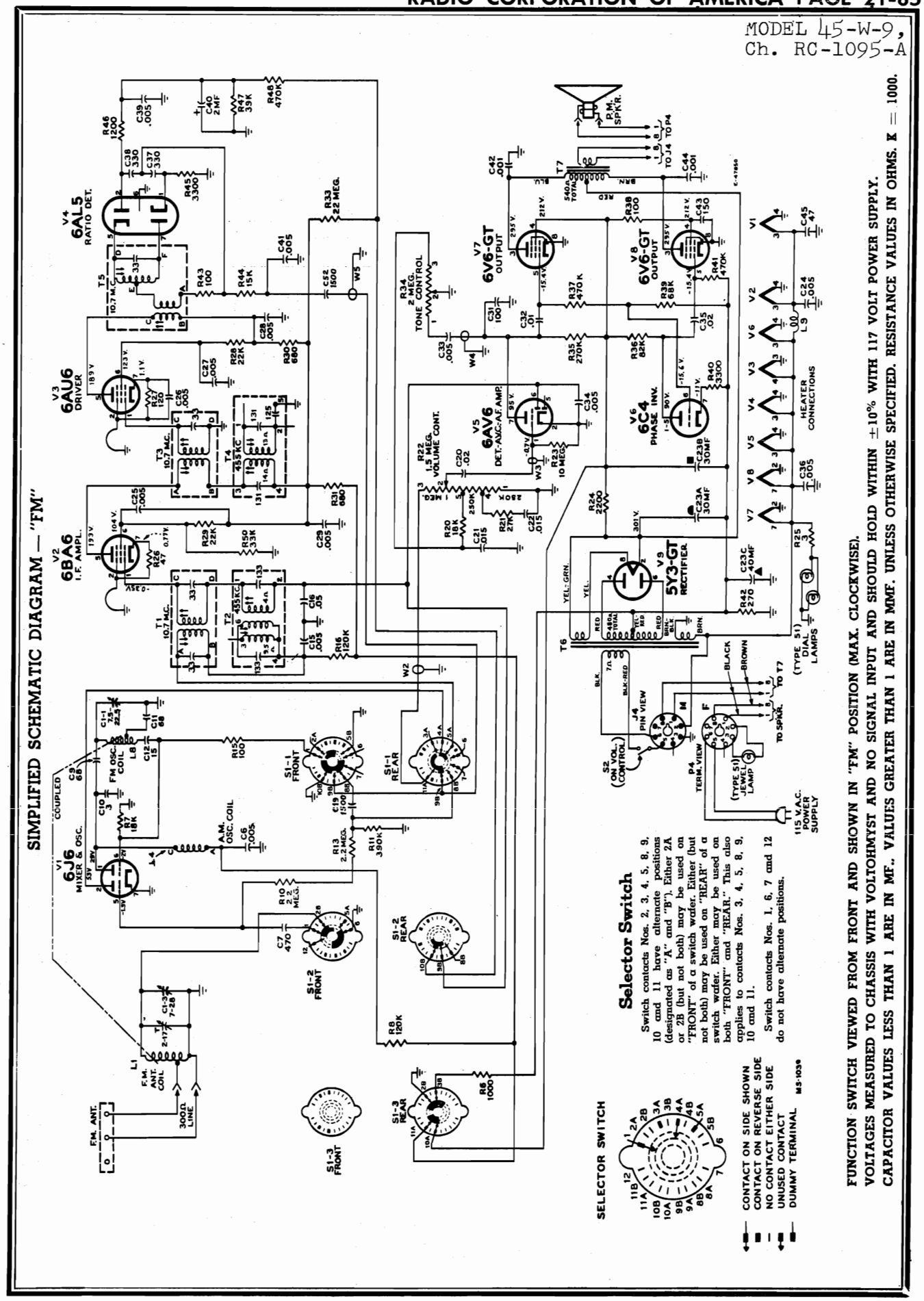

©John F. Rider

Compliments of www.nucow.com

MODEL 45-W-9,
Ch. RC-1095-A

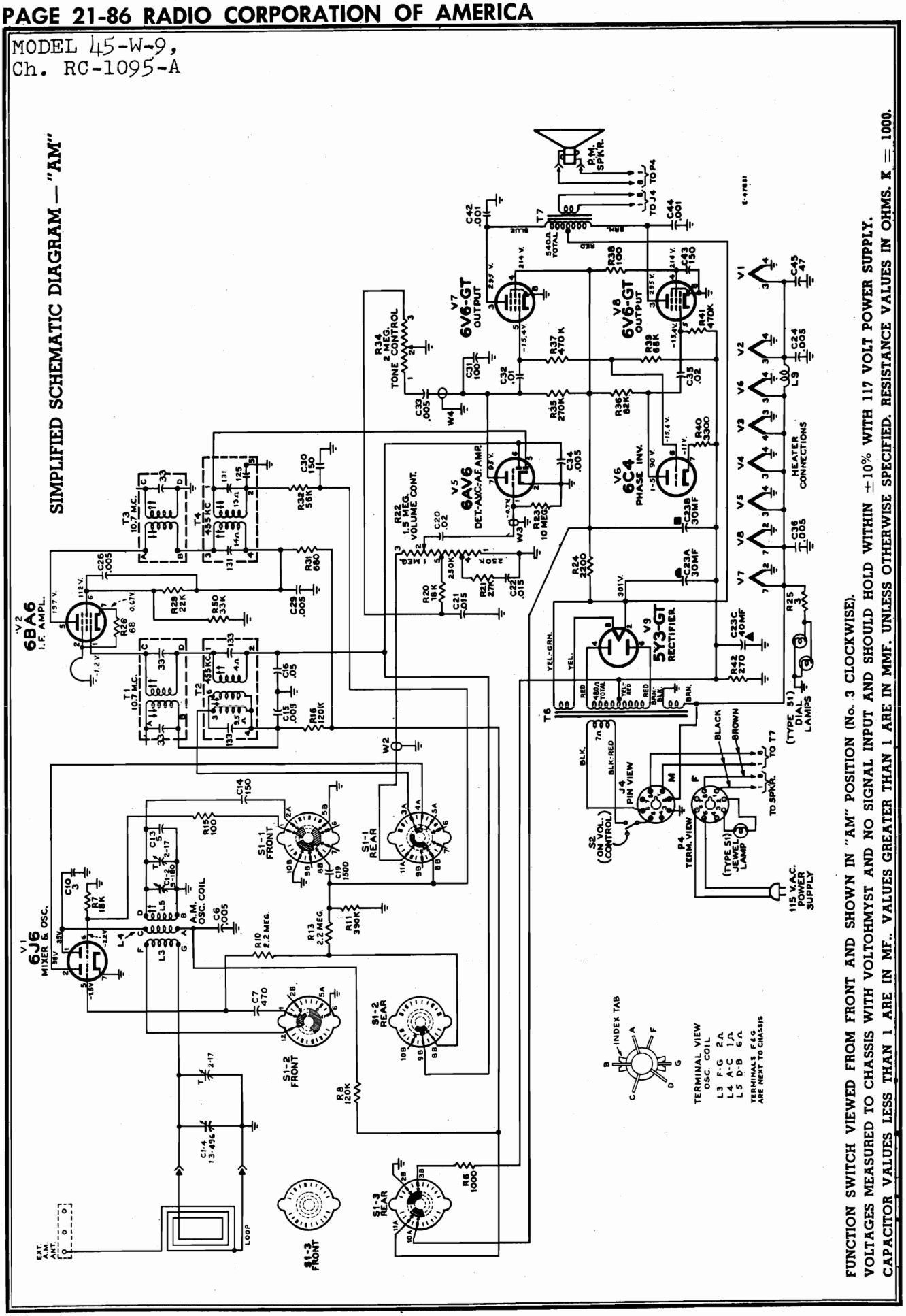

FUNCTION SWITCH VIEWED FROM FRONT AND SHOWN IN "AM" POSITION (No. 3 CLOCKWISE).
VOLTAGES MEASURED TO CHASSIS WITH VOLTOHMYST AND NO SIGNAL INPUT AND SHOULD HOLD WITHIN ±10% WITH 117 VOLT POWER SUPPLY.
CAPACITOR VALUES LESS THAN 1 ARE IN MF. VALUES GREATER THAN 1 ARE IN MMF. UNLESS OTHERWISE SPECIFIED. RESISTANCE VALUES IN OHMS. K = 1000.

©John F. Rider

Compliments of www.nucow.com

MODEL 45-W-9,
Ch. RC-1095-A

"AUX" AND "PHONO" SWITCH POSITIONS — REPLACEMENT PARTS

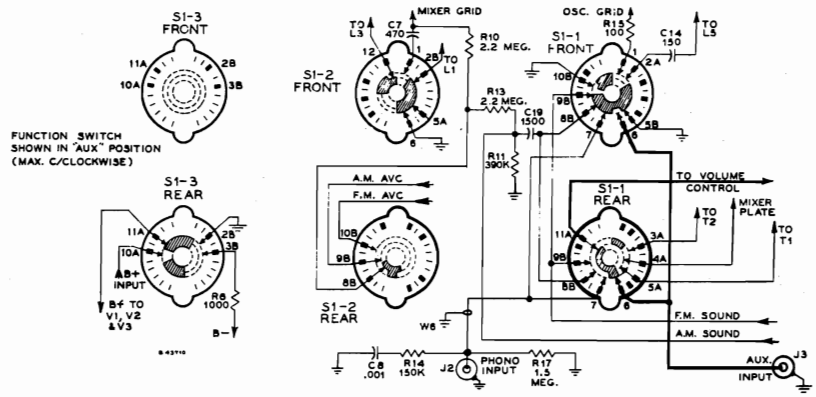

Switch Position Schematic Diagram—"Aux"

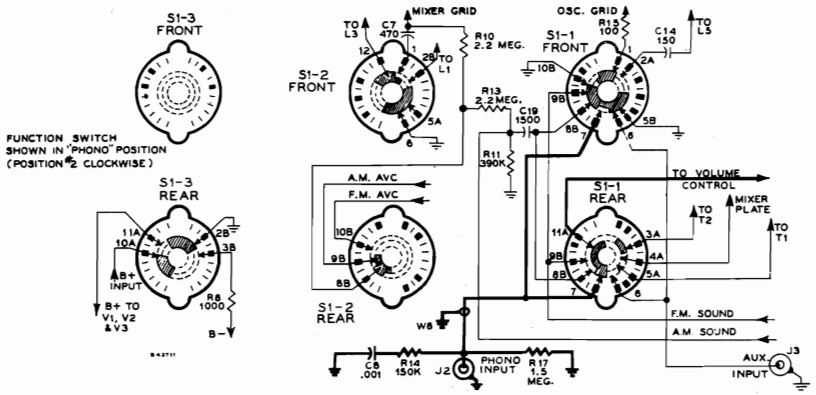

Switch Position Schematic Diagram—"Phono"

In "Aux" and "Phono" positions the B+ supply voltage is disconnected in S1-3 which renders the mixer-oscillator, I.F. amplifier and driver tubes inoperative.

Record Changer Mounting

Two shipping screws hold the 45 r.p.m. changer to its roll-out carriage. They are accessible from the underside of the carriage and should be REMOVED at time of installation.

The record changer is mounted with rubber grommets in the carriage and should be free floating.

Roll-out Carriage Removal

The roll-out carriage has two stop pins (one at the back end of each slide), held in place by a retaining spring. To remove roll-out carriage, it is first necessary to pull the retaining springs out of the slides with a pair of long nose pliers, the stop pins are then easily removed. The roll-out carriage may then be removed from the front of the cabinet after disconnecting its connecting cables.

Roll-out Carriage Travel

The radio-45 r.p.m. carriage has a normal movement limitation of approximately 10 in. If the carriage does not have this amount of movement, it may be due to an obstruction or from slippage or creeping of the balls of the slide mechanism. Travel restriction due to slippage or creeping of balls in the slide mechanism can be corrected by exerting slightly greater pull until the normal travel limitation is reached. The carriage should then operate to its full travel with normal pull.

REPLACEMENT PARTS

STOCK No.	DESCRIPTION
	CHASSIS ASSEMBLIES RC 1095A
75599	Capacitor—Variable tuning capacitor (C1-1, C1-2, C1-3, C1-4)
74733	Capacitor—Ceramic, 3 mmf. (C10)
75613	Capacitor—Ceramic, 5 mmf. (C13)
39044	Capacitor—Ceramic, 15 mmf. (C12)
75609	Capacitor—Ceramic, 47 mmf. (C45)
75612	Capacitor—Ceramic, 68 mmf. (C9, C11)
75437	Capacitor—Ceramic, 100 mmf. (C31)
75614	Capacitor—Ceramic, 150 mmf. (C14, C30, C43)
39640	Capacitor—Mica, 330 mmf. (C37, C38)
39644	Capacitor—Mica, 470 mmf. (C7)
75610	Capacitor—Ceramic, 1,500 mmf. (C19, C52)
73473	Capacitor—Ceramic, 5,000 mmf. (C6, C15, C24, C25, C27, C28, C29, C34, C36)
73801	Capacitor—Tubular, paper, .001 mfd, 400 volts (C8)
70642	Capacitor—Tubular, paper, .001 mfd, 1,000 volts (C42, C44)
72490	Capacitor—Tubular, paper, .005 mfd, 200 volts (C26, C39, C41)
73920	Capacitor—Tubular, paper, .005 mfd, 400 volts (C33)
71925	Capacitor—Tubular, paper, .01 mfd, 400 volts (C32)
72120	Capacitor—Tubular, paper, .015 mfd, 200 volts (C21, C22)
71928	Capacitor—Tubular, paper, .02 mfd, 100 volts (C20)
73638	Capacitor—Tubular, paper, .02 mfd, 400 volts (C35)
73553	Capacitor—Tubular, paper, .05 mfd, 200 volts (C16)
73747	Capacitor—Electrolytic, 2 mfd, 50 volts (C40)
72052	Capacitor—Electrolytic, comprising 1 section of 30 mfd, 450 volts, 1 section of 30 mfd, 350 volts, and 1 section of 40 mfd, 25 volts (C23A, C23B, C23C)

STOCK No.	DESCRIPTION
75627	Clip—Clip for main cable—on rear of chassis
73935	Clip—Mounting clip for A-M I-F transformers
75569	Coil—Oscillator coil (A-M) complete with adjustable core (L3, L4, L5)
71942	Coil—Filament choke coil (L9)
74817	Coil—Oscillator coil—F-M (L8)
75617	Coil—Antenna coil—F-M (L1)
35787	Connector—Single contact female connector for pick-up cables (J2, J3)
75542	Connector—8 contact male connector for power input cable (J4)
75543	Connector—2 contact female connector for record changer motor cable (P1)
74879	Connector—2 contact female connector for antenna leads
75537	Control—Volume control and power switch (R22, S2)
75538	Control—Tone control (R34)
†72953	Cord—Drive cord (approximately 66" overall length required)
75564	Coupling—Spring coupling for function switch extension shaft
75556	Cover—Insulating cover for electrolytic capacitor No. 72052
74839	Fastener—Push fastener for mounting R.F. shelf (4 required)
16058	Grommet—Rubber grommet for mounting R.F. shelf (4 required)
75547	Grommet—Rubber grommet to mount slide mechanism to bottom—rear (2 required)
75548	Grommet—Rubber grommet to mount slide mechanism to bottom—front (2 required)
11765	Lamp—Dial lamp—Mazda No. 51

†Stock No. 72953 is a reel containing 250 feet of cord.

©John F. Rider

Compliments of www.nucow.com

MODEL 45-W-9,
Ch. RC-1095-A

REPLACEMENT PARTS — Continued

STOCK No.	DESCRIPTION
75544	Nut—Rivnut to fasten screw for mounting chassis (4 required)
18469	Plate—Bakelite mounting plate for electrolytic capacitor No. 72052
75535	Plate—Dial back plate complete with three (3) pulleys
75536	Pointer—Station selector pointer
72602	Pulley—Drive cord pulley
72323	Resistor—Wire wound, 3 ohms, ½ watt (R25)
73637	Resistor—Wire wound, 2,200 ohms, 5 watts (R24)
	Resistor—Fixed, composition:
	47 ohms, ±10%, ½ watt (R26)
	100 ohms, ±10%, ½ watt (R15, R38, R43)
	120 ohms, ±10%, ½ watt (R27)
	270 ohms, ±5%, 2 watts (R42)
	680 ohms, ±20%, ½ watt (R30)
	680 ohms, ±20%, 1 watt (R31)
	1,000 ohms, ±10%, ½ watt (R6)
	1,200 ohms, ±5%, ½ watt (R46)
	3,300 ohms, ±5%, ½ watt (R40, R45)
	12,000 ohms, ±10%, 1 watt (R29)
	15,000 ohms, ±10%, ½ watt (R44)
	18,000 ohms, ±10%, ½ watt (R7, R20)
	22,000 ohms, ±10%, ½ watt (R28)
	27,000 ohms, ±10%, ½ watt (R21)
	33,000 ohms, ±10%, ½ watt (R50)
	39,000 ohms, ±5%, ½ watt (R47)
	56,000 ohms, ±10%, ½ watt (R32)
	68,000 ohms, ±10%, ½ watt (R39)
	82,000 ohms, ±10%, ½ watt (R36)
	120,000 ohms, ±10%, ½ watt (R8, R16)
	150,000 ohms, ±10%, ½ watt (R14)
	270,000 ohms, ±10%, ½ watt (R35)
	390,000 ohms, ±10%, ½ watt (R11)
	470,000 ohms, ±10%, ½ watt (R37, R41, R48)
	1.5 megohm, ±10%, ½ watt (R17)
	2.2 megohm, ±20%, ½ watt (R10, R13)
	10 megohm, ±20%, ½ watt (R23)
	22 megohm, ±20%, ½ watt (R33)
75540	Shaft—Tuning knob shaft
75565	Shaft—Extension shaft for function switch
73584	Shield—Tube shield for V5
75546	Slide—Slide mechanism complete for radio chassis bottom
31251	Socket—Tube socket, octal, wafer
73117	Socket—Tube socket, 7 pin, miniature
74179	Socket—Tube socket, 7 pin, miniature for 6J6 tube only
31364	Socket—Dial lamp socket
75563	Spring—Retaining spring for function switch extension shaft
74038	Spring—Drive cord spring
74847	Support—Polystyrene support for F-M oscillator coil complete with mounting bracket
75600	Switch—Function switch (S1-1, S1-2, S1-3)
75557	Transformer—Output transformer (T7)
73743	Transformer—Ratio detector transformer (T5)
75558	Transformer—First I-F transformer (A-M) complete with adjustable cores (T2)
73037	Transformer—Second I-F transformer (A-M) complete with adjustable cores (T4)
75559	Transformer—First I-F transformer (F-M) complete with adjustable cores (T1)
75560	Transformer—Second I-F transformer (F-M) complete with adjustable cores (T3)
75566	Transformer—Power transformer, 117 volts, 60 cycle (T6)
33726	Washer—"C" washer for tuning knob shaft
	RADIO ROLLOUT CARRIAGE
75895	Decal—Function decal for controls
75572	Dial—Polystyrene dial scale
75549	Frame—Moulded frame (maroon) for mounting radio chassis and 45 RPM record changer—for mahogany or walnut instruments
75683	Frame—Moulded frame (light brown) for mounting radio chassis and 45 RPM record changer—for oak instruments
75551	Handle—Metal pullout handle for mounting frame
75555	Screw—No. 8-32 x ⅝" cross recessed pan head machine screw to mount radio chassis
	SPEAKER ASSEMBLY Stamped 92569-12W RMA 274 RL 111-A1
13867	Cap—Dust cap
75682	Cone—Cone and voice coil assembly (3.2 ohms)
75681	Speaker—12" P.M. speaker complete with cone and voice coil (3.2 ohms) NOTE: If stamping on speaker does not agree with above number, order replacement parts by referring to model number of instrument, number stamped on speaker and full description of part required.
	MISCELLANEOUS
71864	Antenna—F-M antenna
75705	Antenna—Antenna loop complete, less cable
75900	Back—Back cover—maroon—for radio-phono compartment—for mahogany or walnut instruments (assembled to rollout)
75901	Back—Back cover—light brown—for radio-phono compartment—for oak instruments (assembled to rollout)
73680	Board—"A-F-M" terminal board
75694	Bracket—Stop bracket less rubber bumper for radio-phono compartment rollout
71599	Bracket—Pilot lamp bracket
75696	Bumper—Rubber bumper for rollout stop bracket
72437	Cable—Shielded pickup cable complete with pin plug
13103	Cap—Pilot lamp cap
71892	Catch—Bullet catch and strike for cabinet doors
X3144	Cloth—Grille cloth for mahogany or walnut instruments
X3089	Cloth—Grille cloth for oak instruments
74882	Connector—2 contact (polarized) male connector for AM loop cable
74752	Connector—2 contact male connector for FM antenna terminal board cable
75709	Connector—8 contact female connector for main cable (less shell) (P4)
75474	Connector—Single contact male connector for speaker (2 required)
30870	Connector—2 contact male connector for motor cable (P1A)
71984	Decal—Trade mark decal (RCA Victor)
74273	Decal—Trade mark decal (Victrola)
37396	Grommet—Rubber grommet for mounting speaker
74838	Grommet—Power cord strain relief (1 set)
75697	Grommet—Rubber grommet to mount record changer
74308	Hinge—Cabinet door hinge (1 set)
75712	Knob—Tuning control, tone control or volume control and power switch knob—maroon—for mahogany or walnut instruments
75713	Knob—Tuning control, tone control or volume control and power switch knob—tan—for oak instruments
75714	Knob—Function switch knob—maroon—for mahogany or walnut instruments
75715	Knob—Function switch knob—tan—for oak instruments
11765	Lamp—Pilot lamp—Mazda No. 51
73634	Nut—Speed nut for speaker mounting screws
75908	Pull—Door pull
75907	Screw—No. 10-32 x 5¼" cross recessed round head screw (special) to mount rollout frame
75920	Screw—No. 10-24 x 1" trimit head screw for door pull
75708	Shell—Shell for 8 contact connector No. 75709
31364	Socket—Pilot lamp socket and lead
74734	Spring—Retaining spring for knobs
75902	Spring—Suspension spring for main cable
72936	Stop—Cabinet door stop

©John F. Rider

Compliments of www.nucow.com

MODEL RC10,
Tuner

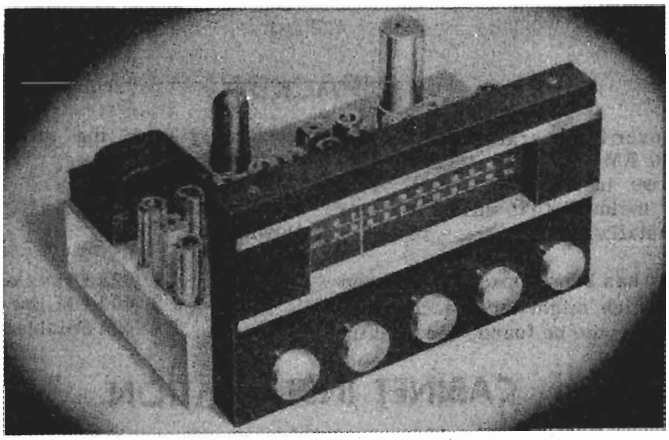

ELECTRICAL SPECIFICATIONS

TUBE COMPLEMENT: 11 tubes plus rectifier — 6AB4 FM RF preamp., 6CB6 RF amp., 12AT7 mixer, 12AT7 osc. and AFC., (2) 6CB6 IF amp., (2) 9001 limiters, 6AL5 FM det., 6AV6 AM det. and phono, pre-amp., 12AU7 audio amp., 6X5GT rectifier.

CONTROLS: Bass, Off-On-Volume, FM-AM-PH-TV selector, Tuning, Treble.

ANTENNA: FM-300 ohm or 72 ohm input. Built-in antenna also provided. AM-high or low impedance transformer input. Low-noise loop also provided.

SENSITIVITY: FM-5 microvolts for 30 db. quieting. AM-5 microvolts for 0.25 volts output at either detector or audio amplifier.

FM DRIFT: Negligible with Automatic Frequency Control. Without AFC, ± 20 kc. after 10 sec. warmup.

OUTPUT: Capability up to 3 volts at less than 1% distortion at 5000 ohms impedance. For use with either high or low gain amplifiers with input impedance of 25,000 ohms or higher. Connection direct from detector also provided.

TONE COMPENSATION: Bass variable up to 12 db. boost or 10 db. cut at 70 cps. Treble variable up to 9 db. boost or 15 db. cut at 10,000 cps.

PHONO PRE-AMPLIFIER: 24 db. gain plus 10 db. bass compensation.

INTERMEDIATE FREQUENCIES: FM—10.7 mc.; AM—455 kc.

BANDWIDTH: FM—190 kc.; AM —8.5 kc.

AM INTERSTATION WHISTLE FILTER: 25 db. rejection at 10 kc., 1 db. at 7 kc.

POWER CONSUMPTION: 105-125 volts, 60 cps., 55 watts.

SHIPPING WEIGHT: 16 lbs.

DIMENSIONS: 13½" x 9½" x 7" high.

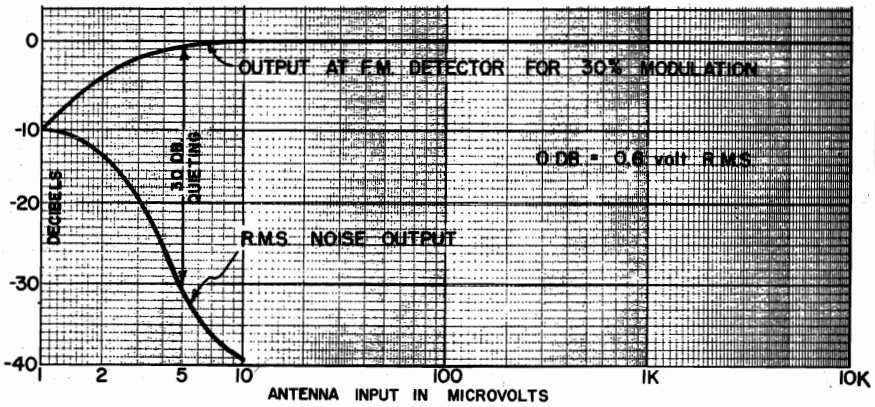

Fig. 1. FM Limiting Characteristic

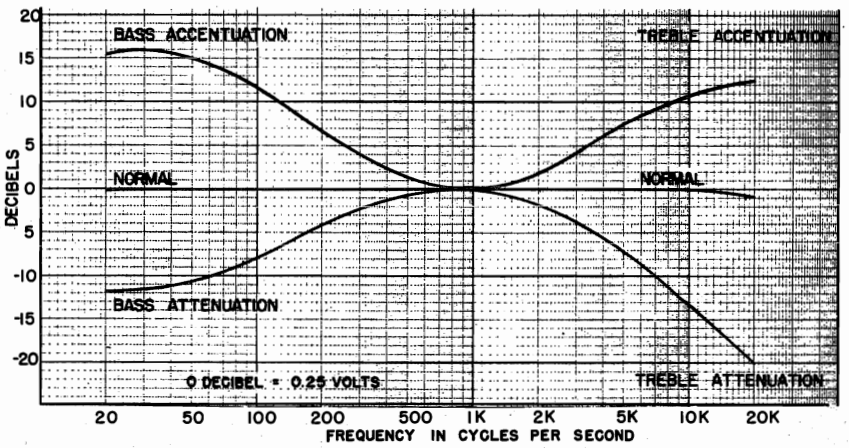

Fig. 2. Audio Characteristic

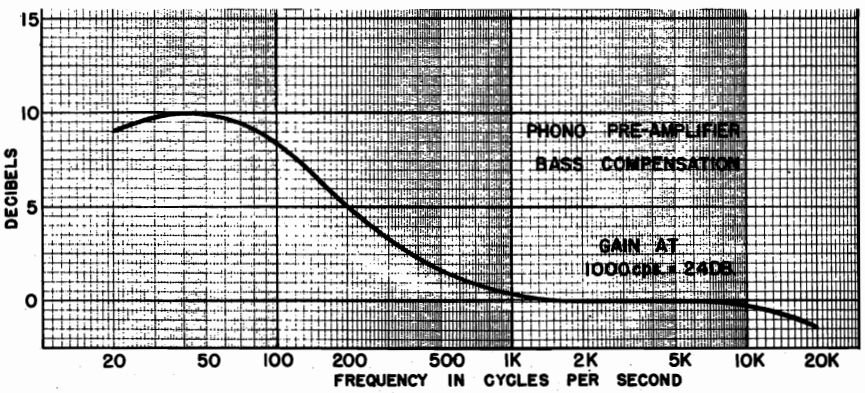

Fig. 3. Phono Pre-amplifier Characteristic

©John F. Rider

Compliments of www.nucow.com

MODEL RC10,
Tuner

UNPACKING

These instructions cover the operation and installation of the Craftsmen RC10 FM-AM Tuner. The entire manual should be read before installing the unit, since much general information is included that will be of value in making any custom-built installation.

As soon as the tuner has been unpacked, examine it for any apparent damage which might have occured in shipment. Should any sign of damage be found, file a claim immediately with the carrier stating the extent of the damage.

Included with the RC10 tuner chassis should be the following:

1 3B023 Brass escutcheon
1 7X403 AM low-impedance antenna
1 7X604 Shielded audio cable

CABINET INSTALLATION

GENERAL - Considerable thought should be given in respect to the installation of the chassis in order to obtain maximum benefit from the operating ease the chassis offers. The dial and controls should be positioned for easy access and reading which, in many cases, can be improved with a sloping front panel. If the mounting board cannot be readily tilted, wooden spacers can be inserted under the front mounting holes to provide the necessary inclination. Position the knobs sufficiently above any front projection to provide ample finger clearance for adjusting the knobs.

"chimney effect" can be utilized advantageously in wall or bookcase installations by providing ports near the bottom and top of the enclosure to effect a flow of air past the chassis.

ASSEMBLY - The front panel cutouts should be made first by using the full-scale template provided. Note that this template is laid out symmetrically about the center knob and above the bottom mounting surface of the rubber shock mounts. Locate and drill the mounting holes as shown in Figure 4. Insert the studs on the rear of the dial escutcheon into the two 3/16-in. diameter holes in the panel and secure the escutcheon with the two #6-32 nuts provided.

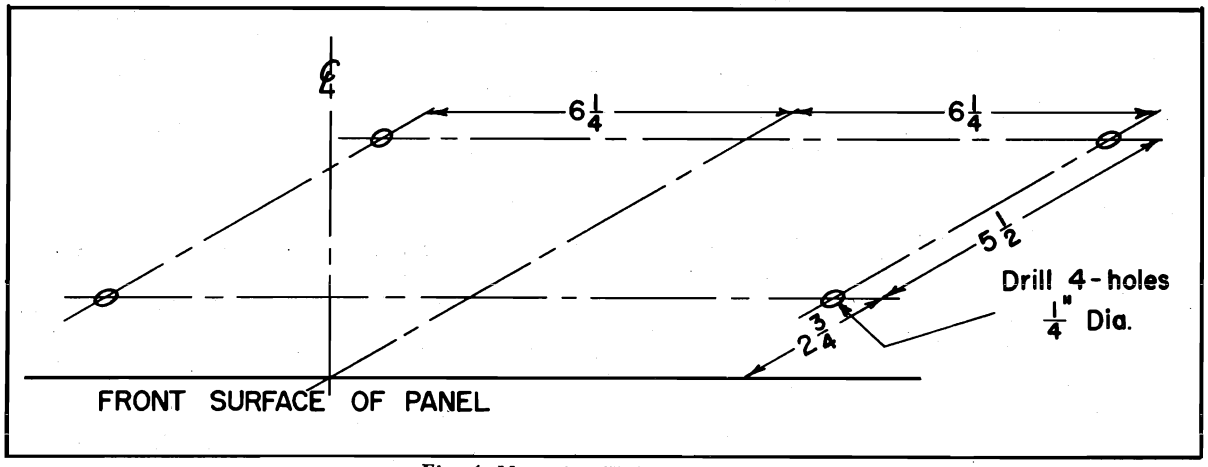

Fig. 4. Mounting Hole Layout

The types and orientation of the tubes used in the tuner permit satisfactory operation regardless of mounting position.

Other considerations in layout are accessibility to the rear for interconnections, sufficient clearance from any metal for the AM loop to insure good pickup, and ample air space above the tubes to prevent any deterioration to a finished wooden cabinet top from tube heat. Where the spacing is necessarily close, this effect may be alleviated with a thin sheet of bright metal tacked beneath the vulnerable surface.

VENTILATION - Considerable ventilation must be provided to carry off the heat dissipated by the receiver. A

Remove the five press-fit knobs (use a steady outward pull on the knob) and the four mounting screws and washers found in the chassis mounts. Locate the chassis so that a 1/16-in. clearance exists between the inward flange of the escutcheon and the dial glass. Replace the four washers and screws and finally press the five knobs on their shafts, noting that the lettering uppermost on the channel knob indicates the channel selected for use.

ELECTRICAL CONNECTIONS

AUDIO SYSTEM - A 5000-ohm audio output socket, furnishing up to 3 volts at less than 1% distortion from 20 to 20,000 cps., (refer to Figure 2) and the associated shielded audio cable have been provided to connect the RC10 into new or existing audio systems. Any audio amplifier, such as the Craftsmen RC2 Hi-Fi Amplifier, with an input impedance of 25,000 ohms or greater can be operated from this output. At the 5000 ohm level as much as 30 feet of cable can be used for inter-connection without undue loss of high-frequency response. The audio amplifier power line cord should be plugged into the AC outlet on the rear of the chassis so that the amplifier can be turned on simultaneously with the FM-AM tuner.

©John F. Rider

Compliments of www.nucow.com

A connection directly to the FM and AM detectors is available at the receptacle labeled Detector Output. This output bypasses the entire RC10 audio system including the tone and volume controls and is useful for feeding recording amplifiers which have preset tone compensation while using the Amplifier Output for monitoring purposes. An audio amplifier with self-contained controls can also be fed from the Detector Output and the Phono or Television inputs will operate thru the band switch even with the tuner power OFF.

Extreme care should be taken with connections to the Detector Output receptacle. Only low capacity cable should be used to prevent loss in high-frequency response.

input, and an input marked "S" connected internally through a switch to either the FM or AM input.

For reception in local or urban localities, loop the flexible ribbon lead (furnished) around the cabinet interior and connect to terminals marked "S" and "G". Finally connect the shorting link between the blank terminal and "G". This ribbon lead forms a low-noise, low-impedance AM loop antenna and should be formed into the largest one or two turn loop practical in the available cabinet space. This loop also provides FM reception since terminal "S" is internally switched to the FM input.

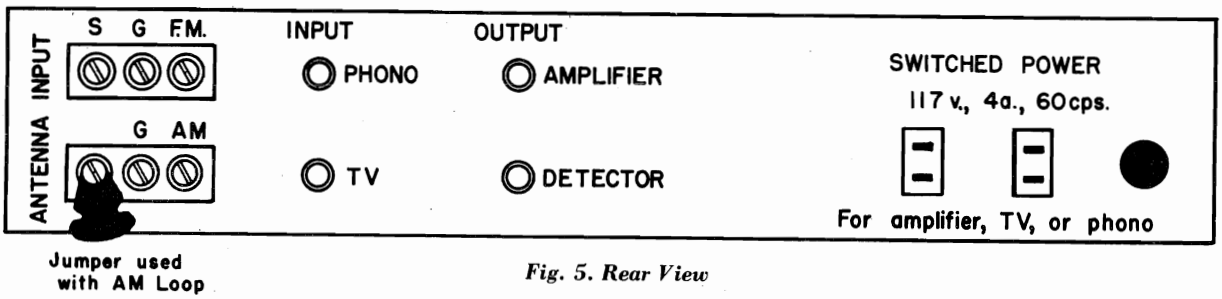

Fig. 5. Rear View

PHONO - Either a reluctance or crystal type phono cartridge may be connected into the Phono input receptacle. For use with a crystal cartridge the pre-amplifier selector switch lever located on top of chassis should be thrown toward the gang - in which position the phono pre-amplifier is bypassed and not in the circuit. When using a reluctance type cartridge (GE, Pickering), throw the switch knob away from the gang to add 24db. gain and bass compensation as shown in Figure 3.

Installations remote from stations might require outside antennas of a more elaborate nature. Connect exterior FM antennas to terminals "FM" and "G", or if to be used as an AM aerial as well, then connect to "S" and "G". Long-line AM aerials can be connected directly to the high-impedance input "AM" (link disconnected) or if brought down through a low-impedance line, to "AM" with the link in place.

Finally for installations including television, it is usually convenient to use the TV antenna to feed the FM

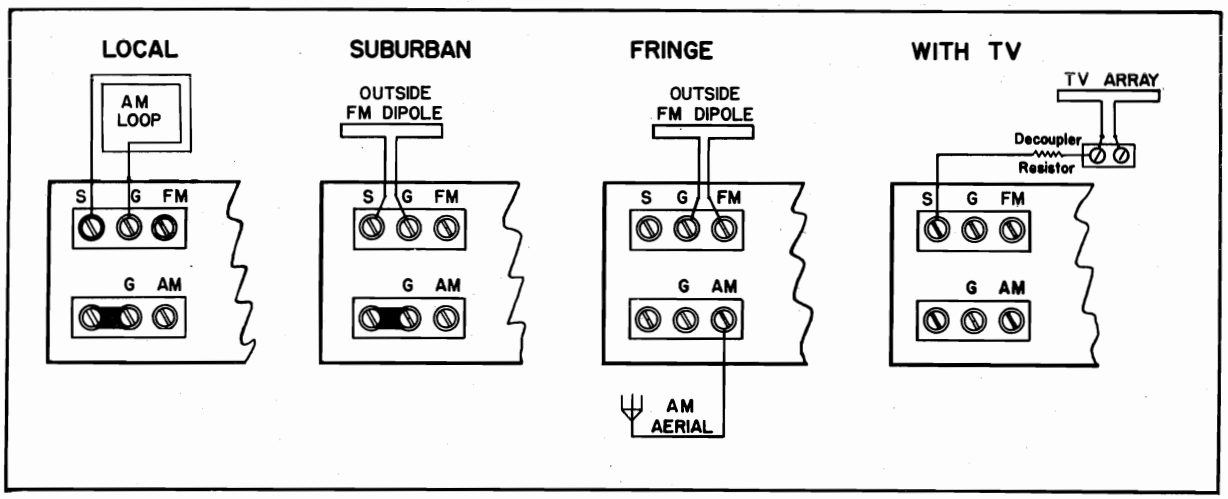

Fig. 6. Antenna Arrangements

ANTENNA - Several antenna arrangements are possible for use with the RC10 as shown in Figure 6 and the best arrangement will depend on the particular installation. The various antenna arrangements make use of AM inputs at either high-impedance (shorting link removed) or low-impedance (shorting link in place), a single-ended FM and AM signals as well. This can be done by coupling lightly (through a 1000-ohm resistor) from terminal "S" to one side of the TV antenna terminals.

TELEVISION - Complete suggested interconnections for installations including television are shown in Figure 7. In general, it is desirable not to operate a television unit while attempting either FM or AM reception because of the various types of interference that may be encountered.

©John F. Rider

Compliments of www.nucow.com

MODEL RC10,
Tuner

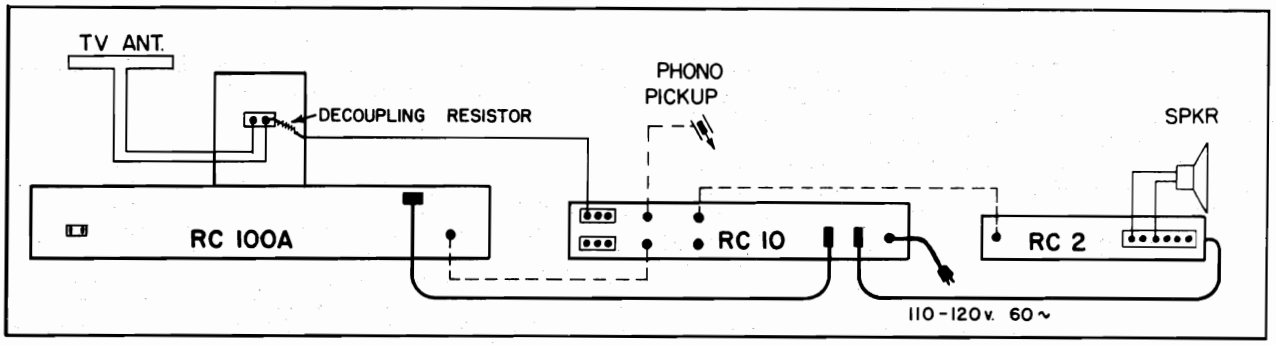

Fig. 7. Typical Installation Interconnections

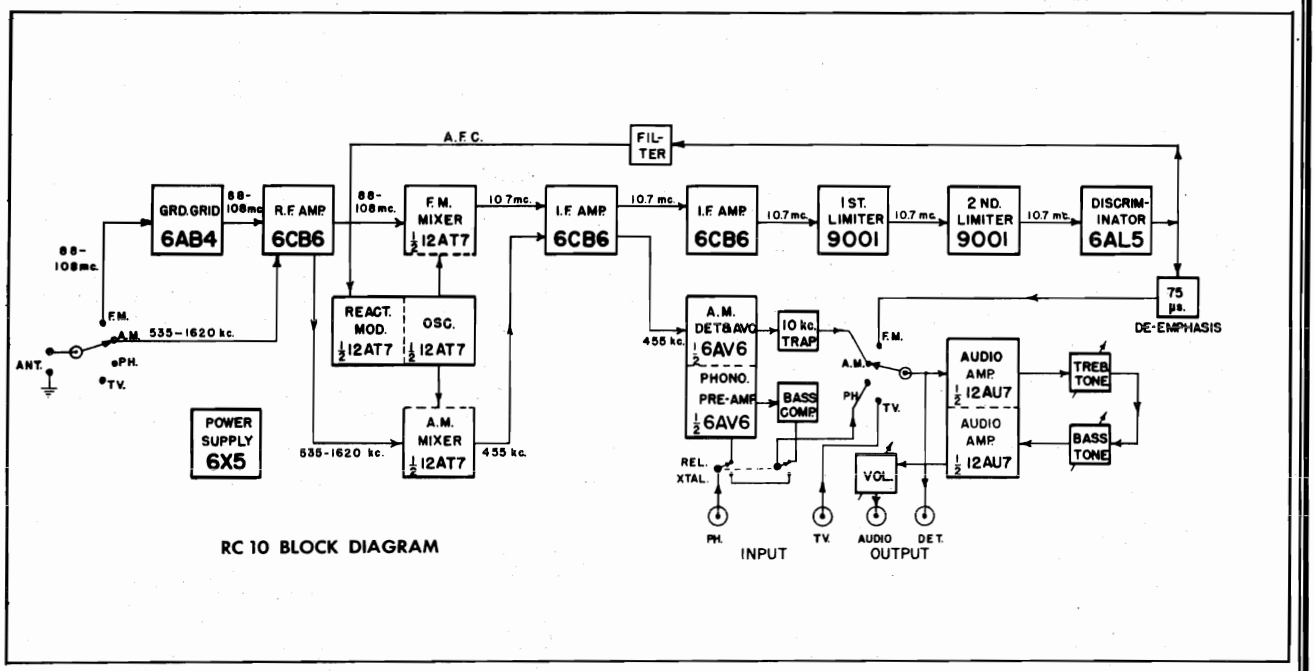

RC 10 BLOCK DIAGRAM

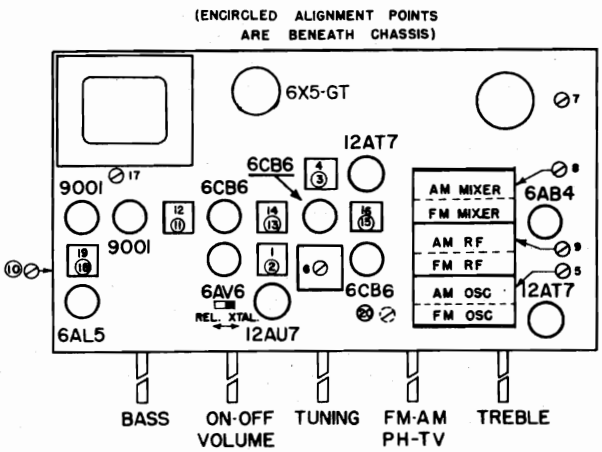

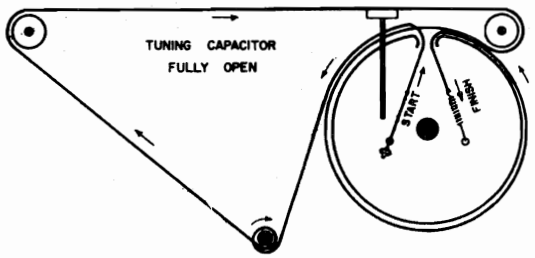

DIAL CORD DRIVE

©John F. Rider

Compliments of www.nucow.com

MODEL RC10,
Tuner

SERVICE INSTRUCTIONS

ALIGNMENT PROCEDURE To set pointer, completely mesh tuning capacitor and align pointer with last reference mark at low frequency end of dial. Volume control should be in maximum clockwise position. Output of signal generator should be no higher than necessary to obtain an output reading. Low side of signal generator and indicating meter should be connected directly to chassis at all times. Use an insulated screw driver witn 1/16" thick blade for adjusting IF transformers.

		SIGNAL GENERATOR			Dial Setting	Indicating Meter	Adjust	Indication
		Coupling	Freq.	Modulation				
AM Alignment	1	.01 µf to pin 7 of 12AT7	455 kc	400 cps AM	Point of no interference	AC voltmeter at Audio output	1, 2, 3, & 4	Maximum deflection
	2	220 µµf to AM ant. input	1500 kc	400 cps AM	1500 kc	Same as above	5	Maximum deflection
	3	Same as above	600 kc	400 cps AM	Tune for maximum response	Same as above	6 & 7	Maximum deflection
	4	Same as above	1400 kc	400 cps AM	Tune for maximum response	Same as above	8 & 9	Maximum deflection
	5	Repeat Steps 3 & 4						
	6	Same as above	1400 kc	10 kc AM	Tune for maximum response	Same as above	10	Null
FM Alignment	7	.01 µf to pin 2 of 12AT7	10.7 mc	None	Point of no interference	Neg. DC VTVM across R31	11, 12, 13, 14, 15, & 16	Maximum deflection
	8	Same as above	10.7 mc	None	Same as above	Neg. DC VTVM at junction R62 & R63	17 & 18	Maximum deflection
	9	Same as above	10.7 mc	None	Same as above	Zero center scale DC VTVM at Det. Output	19	Zero volts between positive & negative reading
	10	270Ω Carbon to FM ant. input	106 mc	400 cps FM ± 25 kc	106 mc	AC voltmeter at Audio output	20	Maximum deflection
	11	Same as above	98 mc	Same as above	Tune for maximum response	Same as above	Contract or extend coil spring 21, 22, & 23	Maximum deflection
	12	Same as above	98 mc	400 cps FM ± 250 kc	98 mc	Vertical input oscilloscope at Det. Output		Check symmetry of "S" shape

TUBE	FUNCTION	PIN 1	PIN 2	PIN 3	PIN 4	PIN 5	PIN 6	PIN 7	PIN 8	PIN 9
6AB4	FM RF Preamp.	95	0	6.3*	0	0	0	0.5	--	--
6CB6	RF Amp.	0	2.5	0	6.3*	137	137	0	--	--
12AT7	Mixer	145	0	2.8	0	0	0	-1.0	0	6.3*
12AT7	Osc. & AFC	137	-2.0	0	0	0	156	0	2.1	6.3*
6CB6	1st IF Amp.	-0.2	1.9	6.3*	0	140	140	0	--	--
6CB6	2nd IF Amp.	0	2.0	6.3*	0	142	142	0	--	--
9001	1st Limiter	-0.4	0	6.3*	0	40	40	0	--	--
9001	2nd Limiter	-0.6	0	6.3*	0	36	36	0	--	--
6AL5	FM Det.	0	-2.0	6.3*	0	0	0	-1.8	--	--
6AU6	AM Det. & Phono Amp.	-0.83	0	55	55	-0.5	-0.7	77	--	--
12AU7	Audio Amp.	85	7.2	10	55	5	115	2.3	5.2	55
6X5GT	Rectifier	--	55	207*	--	207*	--	55	235	--

VOLTAGE READINGS

*AC Voltages measured at 1,000 ohms per volt.
DC Voltages measured with vacuum-tube voltmeter.
Socket connections are shown as bottom views.
Measured values are from socket pin to common negative.
Line voltage maintained at 117 volts for voltage readings.
Measurements are with no signal applied and bandswitch in FM position.

©John F. Rider

Compliments of www.nucow.com

MODEL RC10,
Tuner

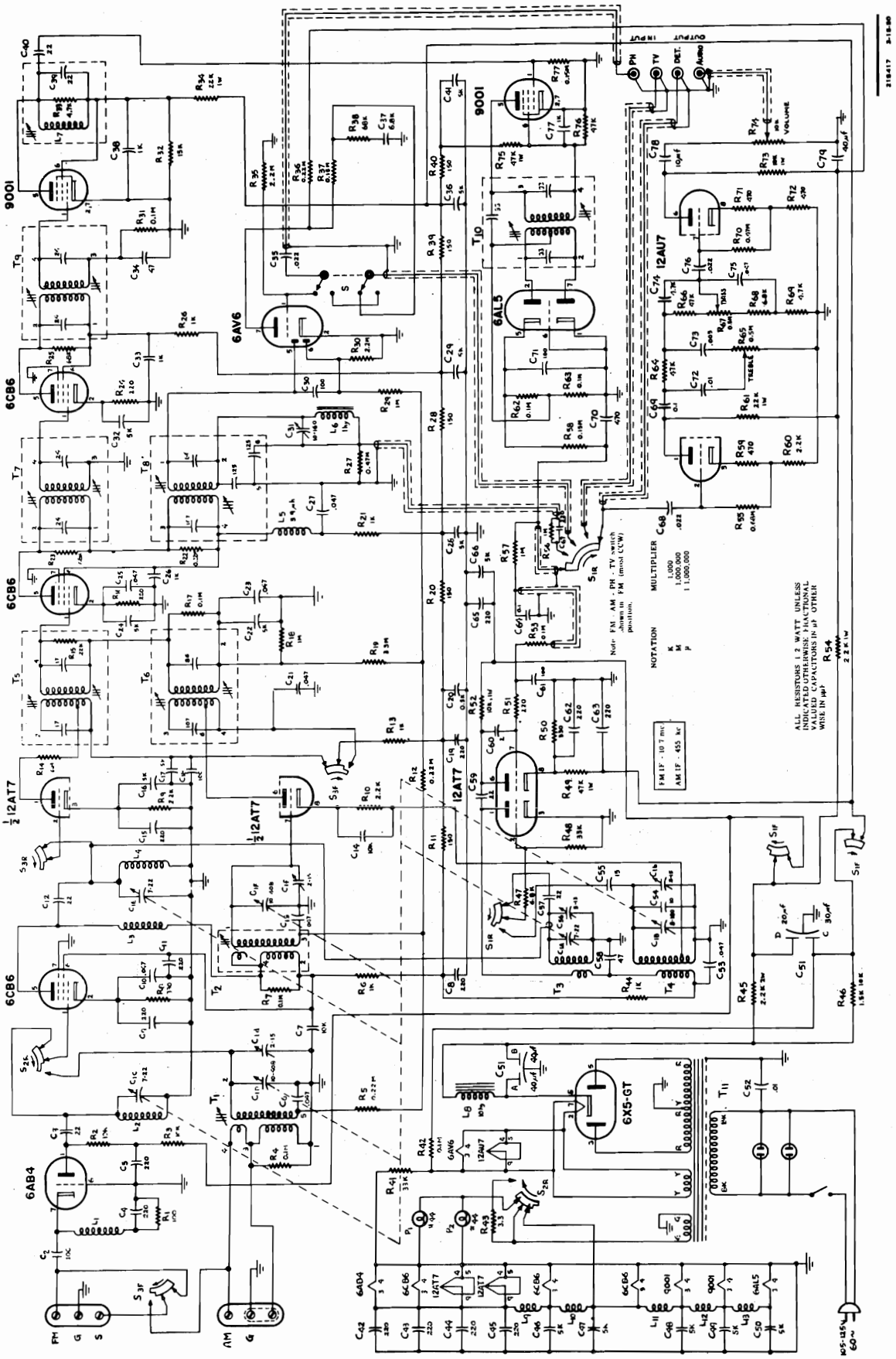

©John F. Rider

Compliments of www.nucow.com

MODEL RC10,
Tuner

REPLACEMENT PARTS LIST

Part No.	Ref. No.	Description
		CAPACITOR, Ganged Tuning
17S007	C1A	7-22 μμf, FM Osc. Tuning
	C1B	8-180 μμf, AM Osc. Tuning
	C1C	7-22 μμf, FM RF Tuning
	C1D	10-408 μμf, AM RF Tuning
	C1E	7-22 μμf, FM Conv. Tuning
	C1b	2-15 μμf, AM Osc. Mica Trimmer
	C1d	2-15 μμf, AM RF Mica Trimmer
	C1f	2-15 μμf, AM Conv. Mica Trimmer
		CAPACITORS, Ceramic
17X401	C56	3-13 μμf, 500v, Trimmer
18X612	C60	2 μμf, 500v, Tubular
18X601	C54	10 μμf, 500v, Tubular
18X602	C55	15 μμf, 500v, Tubular
18X603	C3, C12, C39, C40, C57, C59	22 μμf, 500v, Tubular
18X604	C34, C58	47 μμf, 500v, Tubular
18X605	C2, C18, C30, C61, C71	100 μμf, 500v, Tubular
18X606	C70	470 μμf, 500v Tubular
18X614	C26, C33, C38, C77	1000 μμf, 500v, Tubular
18X620	C4, C5, C8, C9, C11, C15, C19, C42, C43, C44, C45, C62, C63 C65, C67	220 μμf, 500v, Tubular
18X701	C16, C17, C20, C22, C24, C28, C29, C32, C36, C41, C46, C47, C48, C49, C50, C66	5000 μμf, 500v, Disc
18X704	C7, C14	10,000 μμf, 500v, Disc
		CAPACITORS, Mica
17X205	C31	10-160 μμf, 300v Trimmer
18X407	C74	.0047 μf, 300v Molded
18X412	C37	.0068 μf, 300v Molded
18X414	C73	.0033 μf, 300v Molded
		CAPACITORS, Paper
18Z214	C35, C68, C76	.022 μf, 400v Tubular
18Z234	C72	.01 μf, 400v Tubular
18Z236	C52	.01 μf, 600v Molded
18Z254	C6, C10, C13, C21, C23, C25, C27, C53	.047 μf, 400v Tubular
18Z264	C64, C69	0.1 μf, 400v Tubular
18X308	C75	.047 μf ± 10% 400v Tubular
		CAPACITORS, Electrolytic
18S022	C51A	40 μf, 300v, Twist Mount
	C51B	40 μf, 300v
	C51C	30 μf, 300v
	C51D	20 μf, 300v
18X023	C78	10 μf, 250v, Tubular
18X027	C79	40 μf, 250v, Tubular
		PILOT LIGHTS
15X003	P1, P2	#44 Pilot Light

Part No.	Ref. No.	Description
		COILS & CHOKES
5X017	L7	FM Limiter Coil
5A209	L4	FM Conv. Coil
5A210	L2	FM RF Coil
5S402	L3, L5	3.5 μh Choke
5X406	L9, L10, L11, L12, L13	1.0 μh Choke
5X409	L1	0.2 μh Choke
19S405	L8	10 h, Filter Choke
19S406	L6	1 h, 10 kc Filter
		RESISTORS
23Z060	R47	6.8 ohm, 1/2w, Carbon
23Z061	R14	68 ohm, 1/2w, Carbon
23Z002	R1	100 ohm, 1/2w, Carbon
23Z012	R11, R20, R28, R39, R40	150 ohm, 1/2w, Carbon
23Z022	R16, R24, R51	220 ohm, 1/2w, Carbon
23Z032	R8, R50	330 ohm, 1/2w, Carbon
23Z042	R59, R71, R72	470 ohm, 1/2w, Carbon
23Z003	R6, R13, R21, R26, R44	1 K ohm, 1/2w, Carbon
23Z023	R9, R10, R60	2.2 K ohm, 1/2w, Carbon
23Z043	R33, R69	4.7 K ohm, 1/2w, Carbon
23Z033	R68	6.8 K ohm, 1/2w, Carbon
23Z004	R2, R3	10 K ohm, 1/2w, Carbon
23Z014	R32	15 K ohm, 1/2w, Carbon
23Z024	R15	22 K ohm, 1/2w, Carbon
23Z034	R41, R48	33 K ohm, 1/2w, Carbon
23Z044	R64, R66, R76	47 K ohm, 1/2w, Carbon
23Z064	R23, R25, R38	68 K ohm, 1/2w, Carbon
23Z005	R4, R7, R17, R31, R42, R53, R62, R63	0.1 M ohm, 1/2w, Carbon
23Z015	R37, R58, R77	0.15 M ohm, 1/2w, Carbon
23Z025	R5, R12, R22, R36	0.22 M ohm, 1/2w, Carbon
23Z045	R27, R70	0.47 M ohm, 1/2w, Carbon
23Z065	R55	0.68 M ohm, 1/2w, Carbon
23Z006	R18, R29, R56, R57	1 M ohm, 1/2w, Carbon
23Z026	R30, R35	2.2 M ohm, 1/2w, Carbon
23Z036	R19	3.3 M ohm, 1/2w, Carbon
23Z123	R54	2.2 K ohm, 1w, Carbon
23Z104	R52, R73	10 K ohm, 1w, Carbon
23Z124	R34, R61	22 K ohm, 1w, Carbon
23Z144	R49, R75	47 K ohm, 1w, Carbon
23Z223	R45	2.2 K ohm, 2w, Carbon
23X504	R15	3.3 ohm, 1/2w, Wire Wound
23X611	R46	1.5 K ohm, 10w, Wire Wound
23S715	R67	0.5 M ohm, 1/4w, Carbon Pot.
23S716	R74	10 K ohm, 1/4w, Carbon Pot. & Sw
23S717	R65	0.5 M ohm, 1/4w, Carbon Pot.
		SWITCHES
4S006	S1, 2, 3	4 Pos., 3 section Band Switch
4S007	S	DPDT Slide Switch
		TRANSFORMERS
5X005	T10	10.7 mc FM Discriminator
5X013	T5	10.7 mc FM Converter
5X014	T7, T9	10.7 mc FM IF
5X015	T6	455 kc AM Converter
5X016	T8	455 kc AM IF
5A208	T3	FM Osc.
5A218	T4	AM Osc.
5A219	T2	AM RF
5A220	T1	Power Transformer

©John F. Rider

Compliments of www.nucow.com

Compliments of www.nucow.com

METER METHOD OF ALIGNMENT

EQUIPMENT: A STANDARD SIGNAL GENERATOR CAPABLE OF FREQUENCIES ILLUSTRATED BELOW AND A VACUUM TUBE VOLTMETER (VTVM) AS AN OUTPUT INDICATOR. IF NO VTVM IS AVAILABLE USE AS HIGH A RESISTANCE PER VOLT DC VOLTMETER (PREFERABLY 20,000 OHMS PER VOLT METER). THE LOW SIDE OF THE SIGNAL GENERATORS AND METER SHOULD BE CONNECTED FOR ALL ALIGNMENTS TO CHASSIS GROUND OR PIN 2 OF THE TERMINAL STRIP.

STEPS	TUNER DIAL SETTING	SIGNAL GENERATOR FREQUENCY	CONNECT SIGNAL GENERATOR TO	DUMMY ANTENNA	METER CONNECTION	ADJUST TRIMMERS OR COILS IN ORDER SHOWN	REMARKS
A	HIGH FREQ. END OF BAND	10.7 MC UNMODULATED	PIN 4 GRID OF 6SH7 2ND IF AMPLIFIER	0.02MF	TO PIN 3 OF TERMINAL STRIP	S5, S6	MAXIMUM DEFLECTION OF METERS
B	"	"	PIN 4 GRID OF 6SH7 1ST IF	"	"	S3, S4	" " "
C	"	"	PIN 6 RF GRID OF 6J6 CONVERTER TUBE	"	"	S1, S2	" " "
D	98 MC	98 MC UNMODULATED	PIN 1 OF TERMINAL STRIP	500 OHM CARBON RESISTOR	"	T1, T2	MAXIMUM DEFLECTION ON METER HOOK DIAL WHILE TUNING T2 FOR MAXIMUM
E	105 MC	105 MC UNMODULATED	"	"	"	T1	MAXIMUM DEFLECTION ON METER
F	TUNE DIAL FOR MAXIMUM METER DEFLECTION	90 MC UNMODULATED	"	"	"	OSC.COIL	IF DIAL READING IS TOO LOW ACCORDING TO THE FREQ. OF THE GENERATOR EXPAND OSC.COIL SLIGHTLY; IF DIAL READING IS HIGH, COMPRESS COIL. IN EITHER CASE IT IS FOR MAX. DEFLECTION. REPEAT STEPS E & F FOR BEST POSSIBLE INDICATION.
G	REPEAT STEP D FOR FINAL ADJUSTMENTS OF R-F AND OSCILLATOR SECTIONS						
H	HIGH FREQ. END OF BAND	10.7 MC UNMODULATED	PIN 4 GRID OF 6SH7 LIMITER	0.02MF	TO JUNCTION OF R11 & R12 DISCRIMINATOR LEAD RESISTORS	S8	MAXIMUM DEFLECTION ON METER.
I	"	"	"	"	TO PIN 6 OF TERMINAL STRIP	S7	ZERO DEFLECTION (ZERO READING)* ON METER

* VARY SIGNAL GENERATOR BY A SIMILAR AMOUNT ON EITHER SIDE OF THE 10.7 MC SIGNAL AND OBSERVE METER. THE READINGS SHOULD BE THE SAME BUT OF OPPOSITE POLARITY. IF THEY ARE NOT, REPEAT STEPS H AND I IN THE ORDER INDICATED.

©John F. Rider

Compliments of www.nucow.com

MODEL FM5

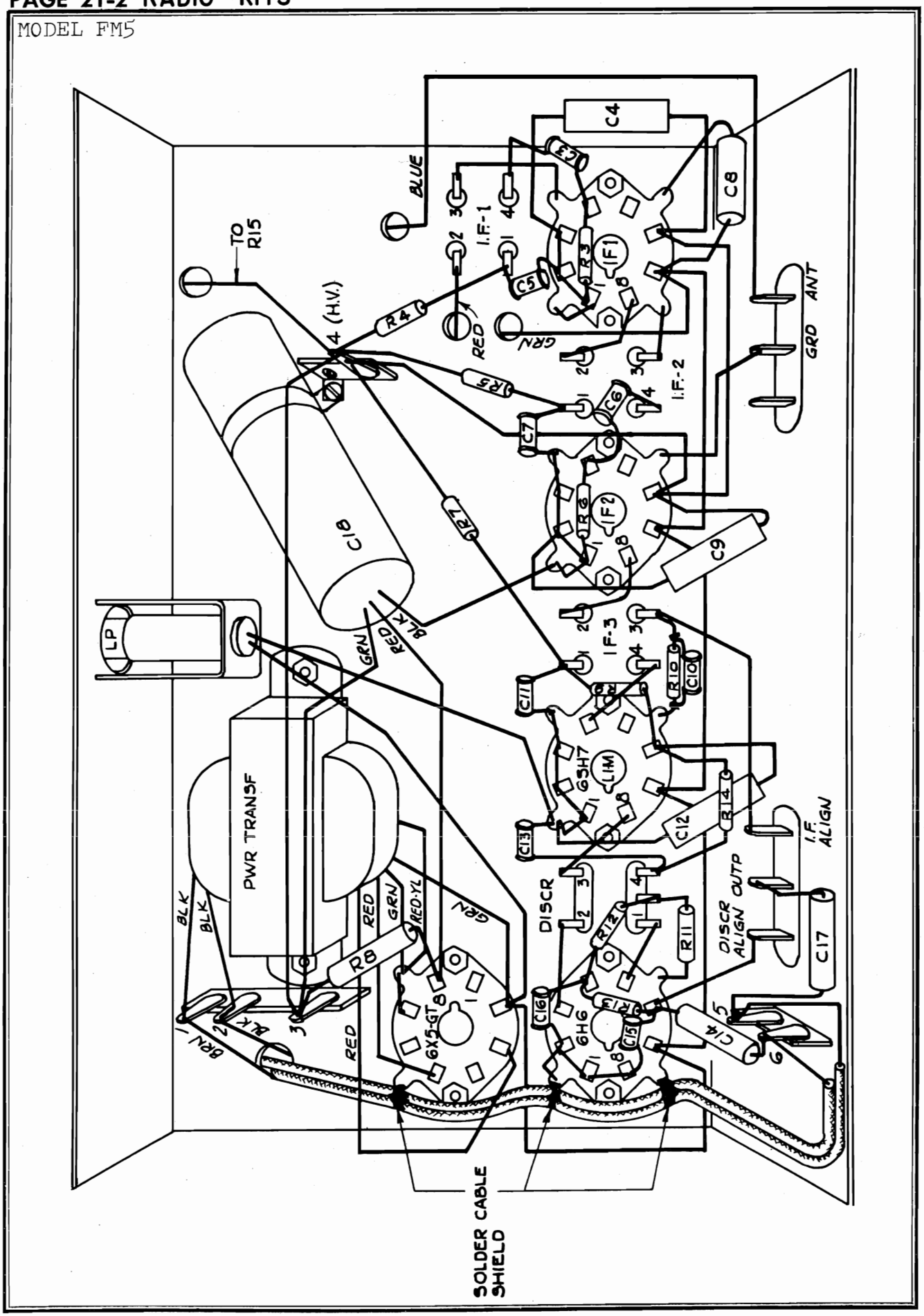

©John F. Rider

Compliments of www.nucow.com

MODEL FM5

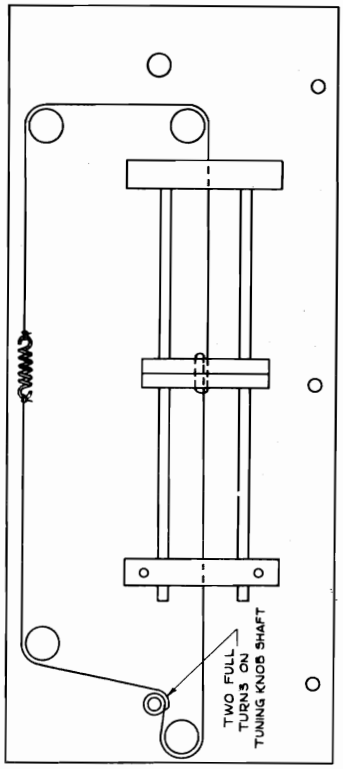

TUNING KNOB CORD CONNECTION

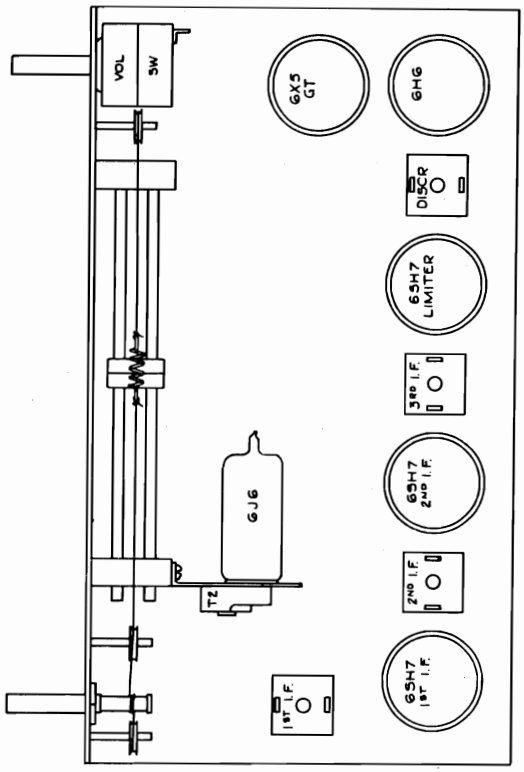

TOP VIEW

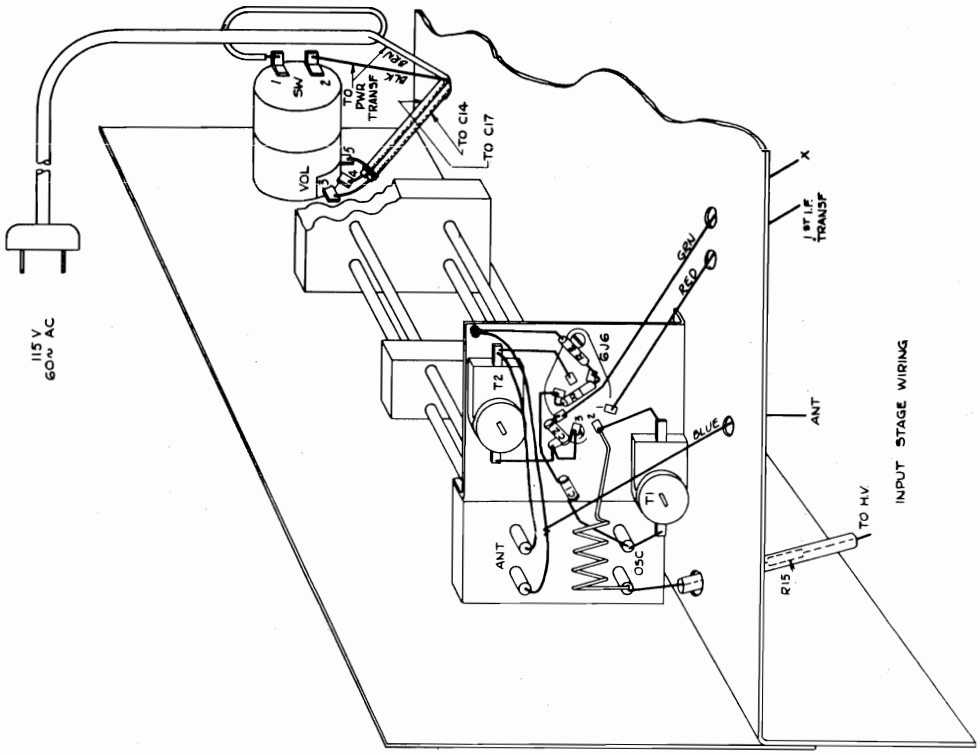

INPUT STAGE WIRING

©John F. Rider

Compliments of www.nucow.com

MODEL FM5

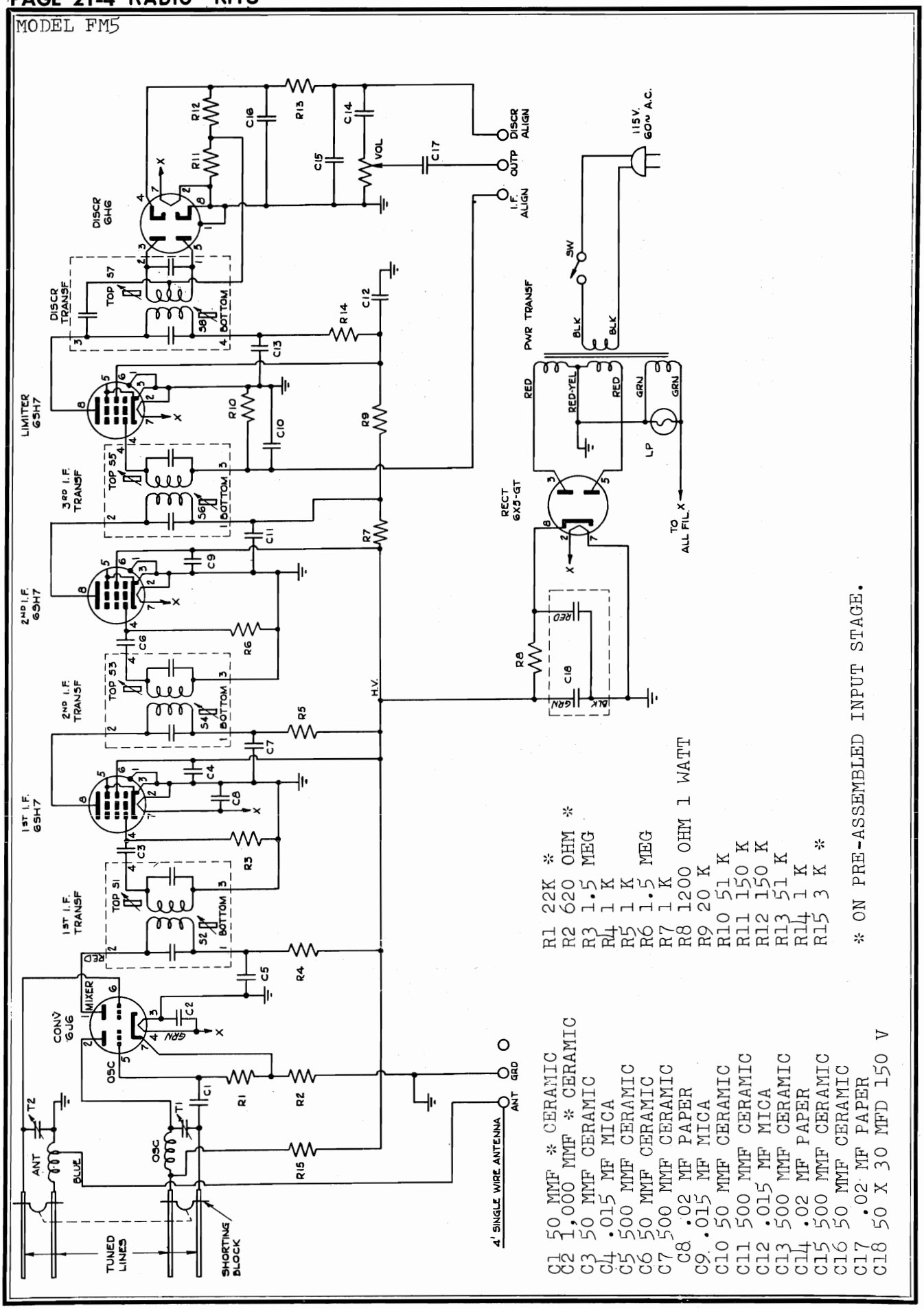

©John F. Rider

Compliments of www.nucow.com

MODEL 4T3X

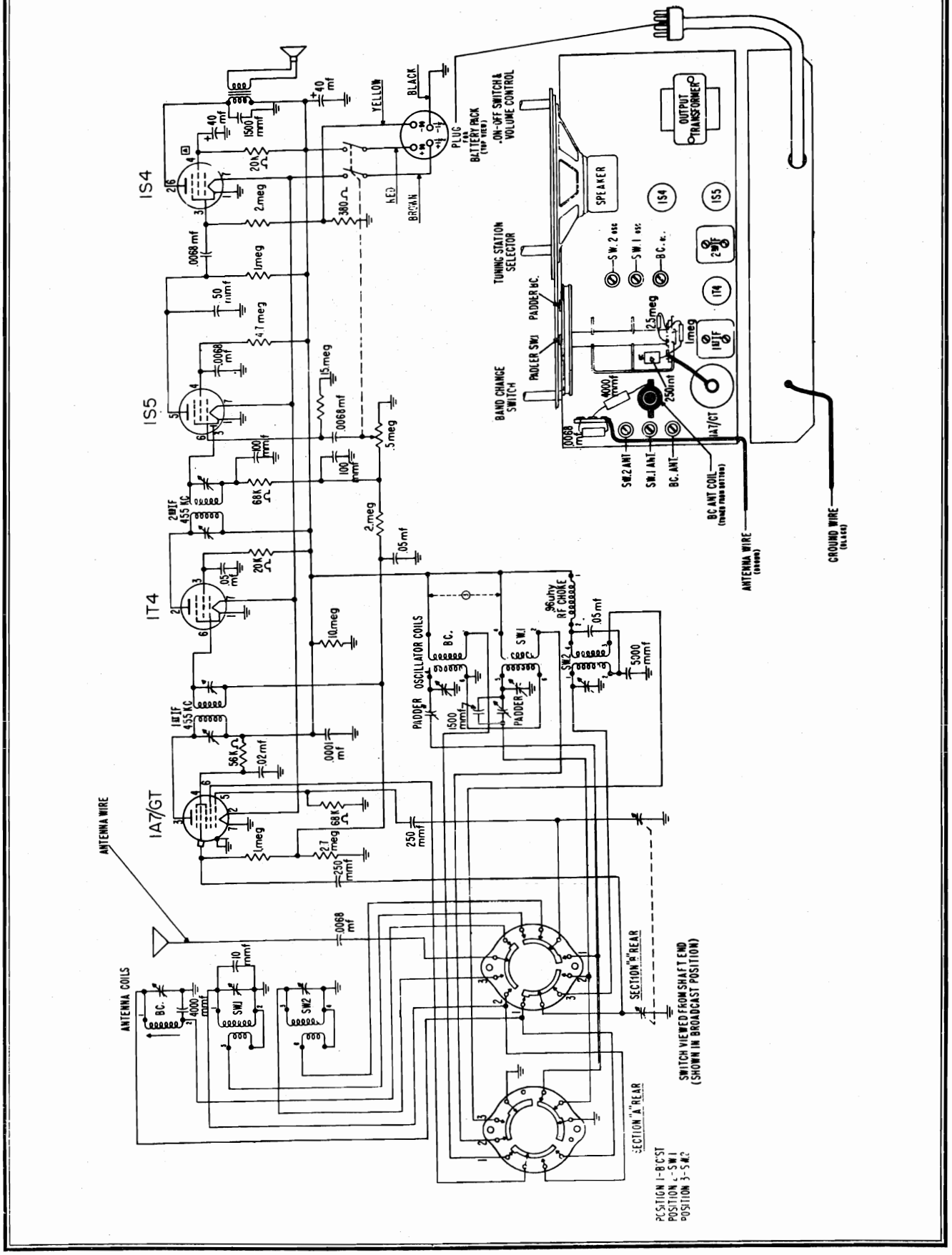

©John F. Rider

Compliments of www.nucow.com

MODEL 4T3X

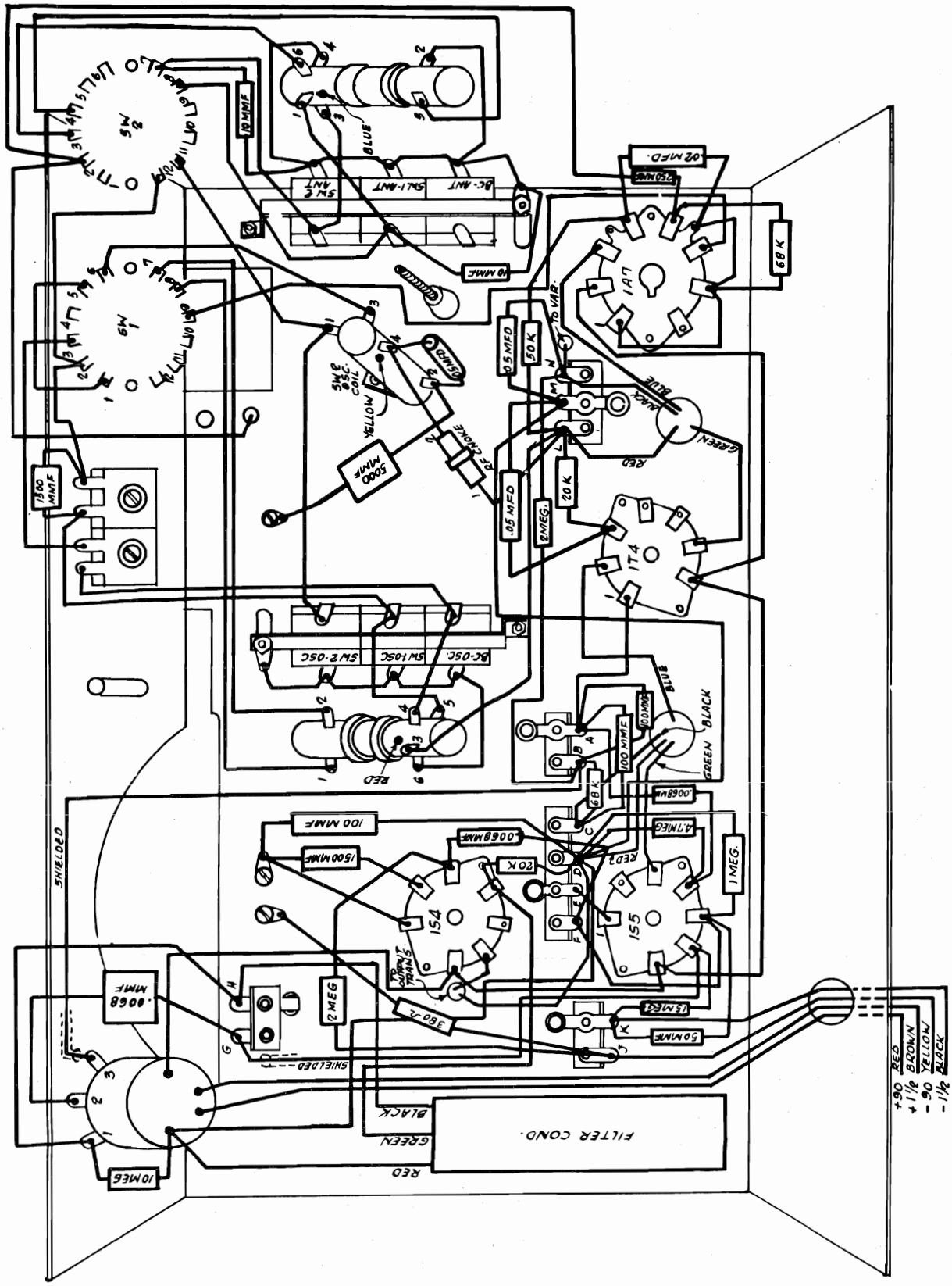

©John F. Rider

Compliments of www.nucow.com

SPECIFICATIONS

MODEL 120: IS A 5-TUBE SUPERHETRODYNE RECEIVER DESIGNED FOR USE ON AC OR DC POWER-LINES. IT HAS THREE TUNING RANGES.

MODEL 120L: FOR USE ON POWER LINES OF 100-125 VOLTS DC OR AC, 50-100 CYCLES.

MODEL 120R: FOR USE ON POWER LINES OF 135-275 VOLTS DC OR AC, 50-100 CYCLES.

VOLTAGES: THE MODEL 120R MUST BE ADAPTED TO THE LINE VOLTAGE BY INSERTING THE CORRECT BALLAST RESISTOR INTO THE BALLAST SOCKET AS FOLLOWS:

ON POWER LINES OF 135 - 165 VOLTS, USE 150 V. BALLAST RESISTOR (G8.323.00)

ON POWER LINES OF 185 - 230 VOLTS, USE 200 V. BALLAST RESISTOR (G8.323.01)

ON POWER LINES OF 225 - 275 VOLTS, USE 250 V. BALLAST RESISTOR (G8.323.02)

BEFORE INSERTING BALLAST RESISTOR INTO SOCKET, THE LEADS BETWEEN PINS 4 AND 1 AND 5 AND 8 OF BALLAST SOCKET MUST BE REMOVED.

(FOR THE POSITION OF THE BALLAST SOCKET, SEE LABEL UNDERNEATH THE CABINET)

TUBES: CONVERTER - 14Q7, I.F. AMPLIFIER - 14A7, SECOND DETECTOR AND FIRST AUDIO - 14B6, AUDIO OUTPUT - 50A5, RECTIFIER - 35Y4.

TUNING RANGES:

MW, 166.7 - 560 M (1800-535 kc/s) LOCAL
MW, 166.7 - 560 M (1800-535 kc/s) DISTANT
2nd SW 166.7 - 50 M (6.0-1.8 Mc/s)
1st SW 50 - 16.6 M (18.0-6.0 Mc/s)

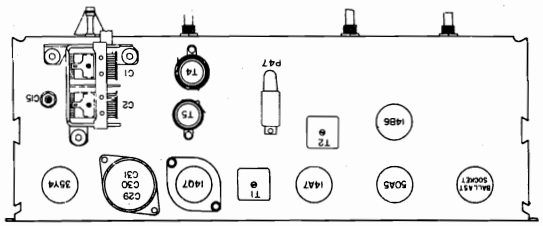

INTERMEDIATE FREQUENCY: 455 kc/s.

AUDIO OUTPUT: 1 WATT (D. 10%).

LOUDSPEAKER: PERMANENT MAGNET DYNAMIC: DIAMETER 15 CENTIMETERS (6 INCHES).

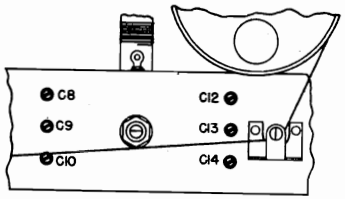

ANTENNA AND GROUND: FOR BEST RESULTS, AN OUTSIDE ANTENNA IS NECESSARY. A SECURE GROUND CONNECTION SHOULD BE MADE TO A GROUNDING PLATE BURIED IN DAMP GROUND, OR TO A COLD WATER PIPE.

PHONOGRAPH CONNECTION: A PHONOGRAPH JACK IS PROVIDED ON THE REAR OF THE CHASSIS.

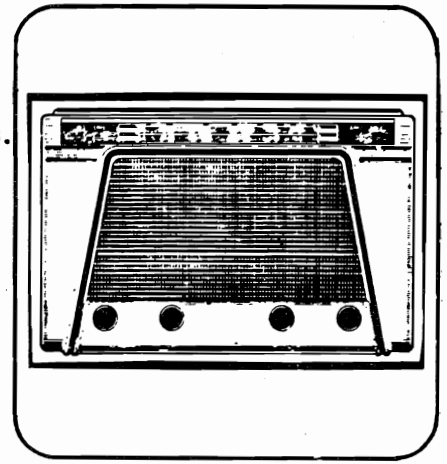

POWER CONSUMPTION: APPROX. 35 WATTS AT 117 VOLTS.

CABINET DIMENSIONS:

WIDTH - 38.7 cm (15-1/4")
HEIGHT - 25.2 cm (9-15/16")
DEPTH - 19.0 cm (7-1/2")

WEIGHT: APPROXIMATELY 5 KGS. (11 POUNDS)

CAUTION: *THE POSSIBILITY OF ACCIDENTAL ELECTRICAL SHOCK HAS BEEN REDUCED BY ELIMINATING A DIRECT CONNECTION BETWEEN THE LINE AND THE CHASSIS. USE A LINE SEPARATING TRANSFORMER WHILE WORKING ON THE RECEIVER ESPECIALLY IF THE LINE VOLTAGE IS 150 VOLTS OR HIGHER.*

©John F. Rider
Compliments of www.nucow.com

MODEL 120
120L, 120R

ALIGNMENT OF RECEIVER

Equipment Required

SIGNAL GENERATOR: CAPABLE OF SUPPLYING MODULATED FREQUENCIES BETWEEN 455 kc/s AND 20 Mc/s.

OUTPUT INDICATOR: A HIGH RESISTANCE A.C. VOLTMETER OR A POWER OUTPUT METER OR ANY OUTPUT INDICATING DEVICE.

Preliminary

REMOVE THE CHASSIS FROM THE CABINET BY UNSCREWING THE FOUR SCREWS, TWO OF WHICH ARE ON THE REAR CHASSIS APRON AND TWO ON THE DIAL POINTER SUPPORT BRACKET: THE TWO LEADS THAT CONNECT THE LOUDSPEAKER TO THE CHASSIS ARE LONG ENOUGH TO PERMIT REMOVAL OF THE CHASSIS WITHOUT DISTURBING THE SPEAKER.

Equipment Connections

OUTPUT INDICATOR: IF A POWER OUTPUT METER IS USED, ADJUST IT FOR FOUR OHMS IMPEDANCE AND CONNECT IT ACROSS SPEAKER VOICE COIL. IF AN A.C. VOLTMETER IS USED IT MAY BE CONNECTED ACROSS THE VOICE COIL, BUT A MORE SATISFACTORY INDICATION WILL BE OBTAINED IF IT IS CONNECTED BETWEEN THE PLATE PRONG OF THE OUTPUT TUBE AND THE CHASSIS, BEING SURE TO USE A .05 mfd. CAPACITOR IN SERIES WITH THE LEAD WHICH IS CONNECTED TO THE PLATE PRONG. REGULATE THE OUTPUT ATTENUATOR OF THE SIGNAL GENERATOR UNTIL A MID-SCALE READING IS OBTAINED ON A LOW SCALE OF THE OUTPUT METER. KEEP THE RECEIVER VOLUME CONTROL IN MAXIMUM OUTPUT POSITION. WHEN OUTPUT INDICATION INCREASES REGULATE SIGNAL GENERATOR ATTENUATOR TO RESTORE THE ORIGINAL INDICATION. THIS REDUCES A.V.C. ACTION AND PERMITS MORE ACCURATE ADJUSTMENTS.

SIGNAL GENERATOR: WHEN ADJUSTING THE I.F. SLUGS, CONNECT THE SIGNAL GENERATOR GROUND LEAD TO "B-". FOR ALL OTHER ADJUSTMENTS CONNECT THIS LEAD TO THE GROUND WIRE (BLACK) IN REAR OF CHASSIS.
USE A NON-METALLIC TOOL FOR THE ADJUSTMENT OF THE I.F. SLUGS. ALWAYS BE SURE TO USE THE SPECIFIED CAPACITOR OR RESISTOR IN SERIES WITH THE SIGNAL GENERATOR OUTPUT LEAD.

Alignment Procedure

SIGNAL GENERATOR			RECEIVER			
OPERATION STEP	OUTPUT CONNECTION TO RECEIVER	FREQUENCY	RANGE SWITCH	TUNING CAPACITOR	SEE NOTES	ADJUST IN STATED ORDER
1	TO 14Q7 CONTROL GRID THROUGH .1 MFD CAPACITOR	455 kc/s	M.W.	MAX. CAP.	"A"	ADJUST I.F. TRANSFORMER SLUGS TO MAXIMUM OUTPUT
2	TO ANTENNA CONTACT THROUGH 200 MFD CAPACITOR - MICA	1810 kc/s	M.W.	MIN. CAP.		C12 FOR MAXIMUM OUTPUT
3	TO ANTENNA CONTACT THROUGH 200 MFD CAPACITOR - MICA	1500 kc/s	M.W.	1500 kc/s	"B"	C8 FOR MAXIMUM OUTPUT
4	TO ANTENNA CONTACT THROUGH 200 MFD CAPACITOR - MICA	600 kc/s	M.W.	600 kc/s	"B"	PADDER C13 FOR MAXIMUM OUTPUT WHILE ROCKING GANG, REPEAT C12,C8,C13
5	THROUGH 400 OHM CARBON RESISTOR TO ANTENNA LEAD	6.1 Mc/s	2nd S.W.	MIN. CAP.	"C"	C19 FOR MAXIMUM OUTPUT
6	THROUGH 400 OHM CARBON RESISTOR TO ANTENNA LEAD	5.0 Mc/s	2nd S.W.	5.0 Mc/s	"B" & "D"	C9 FOR MAXIMUM OUTPUT
7	THROUGH 400 OHM CARBON RESISTOR TO ANTENNA LEAD	18.1 Mc/s	1st S.W.	MIN. CAP.	"C"	C15 FOR MAXIMUM OUTPUT
8	THROUGH 400 OHM CARBON RESISTOR TO ANTENNA LEAD	17.0 Mc/s	1st S.W.	17.0 Mc/s	"B"	C10 FOR MAXIMUM OUTPUT
9	CHECK TRACKING AT 6.5 Mc/s					

NOTE A: SIGNAL GENERATOR GROUND LEAD TO "B-" AS EXPLAINED ABOVE.
NOTE B: TUNE GANG TO SIGNAL GENERATOR.
NOTE C: ADJUST OSCILLATOR TRIMMER TO MAXIMUM CAPACITY POSITION (CLOCKWISE). TURN SCREW COUNTER-CLOCKWISE UNTIL SECOND PEAK IS OBTAINED. THIS WILL BE THE SMALLER CAPACITANCE POSITION.
NOTE D: CHECK TRACKING AT 2 Mc/s.

©John F. Rider

Compliments of www.nucow.com

MODEL 120
120L, 120R

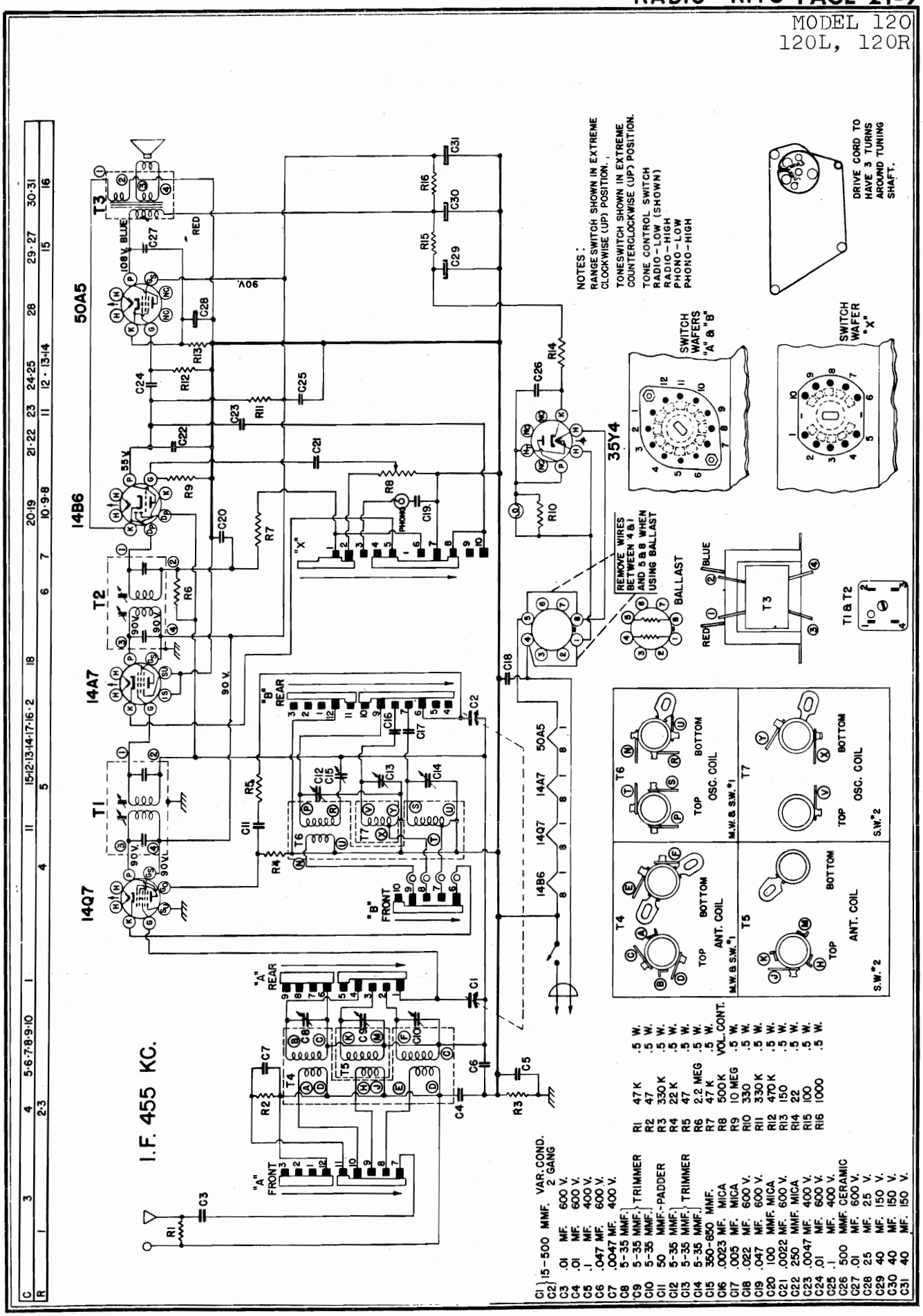

©John F. Rider

Compliments of www.nucow.com

MODEL 120
120L, 120R

LOCATION OF PARTS

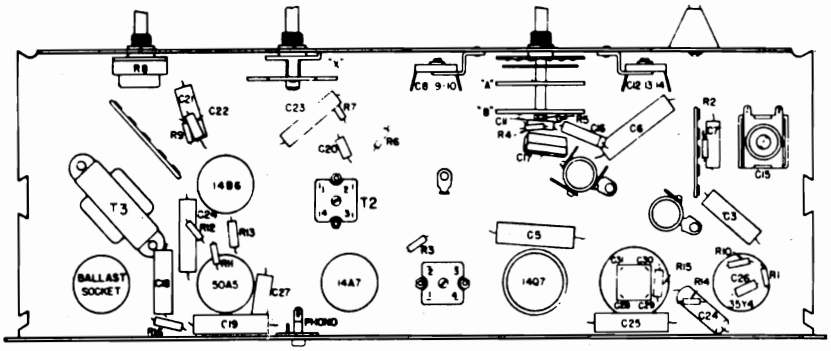

REPLACEMENT PARTS

WHEN ORDERING ALWAYS GIVE DESCRIPTION OF PART, CODE NUMBER AND MODEL NUMBER OF RECEIVER.

CAPACITORS

C1-C2	2 GANG VARIABLE CONDENSER			G9.117.27
C3-C4, C24-C27	.01	Mfd.	600 V	G8.396.39
C5-C25	.1	Mfd.	600 V	G8.396.30
C6-C19	.047	Mfd.	600 V	G8.396.43
C7-C23	.0047	Mfd.	600 V	G8.396.22
C8	5-35	Mmfd.	ANT. TRIMMER	G8.393.26
C9	5-35	Mmfd.	ANT. TRIMMER	
C10	5-35	Mmfd.	ANT. TRIMMER	
C11	50	Mmfd.	MICA	G8.451.06
C12	5-35	Mmfd.	OSC. TRIMMER	G8.393.25
C13	5-35	Mmfd.	OSC. TRIMMER	
C14	5-35	Mmfd.	OSC. TRIMMER	
C15	350-850	Mmfd.	PADDER	G8.394.35
C16	.0023	Mfd.	MICA	G8.450.30
C17	.005	Mfd.	MICA	G8.450.27
C18	.022	Mfd.	600 V	G8.396.41
C20	100	Mmfd.	CERAMIC	G8.395.13
C21	.0022	Mfd.	600 V	G8.396.35
C22	250	Mmfd.	CERAMIC	G8.395.09
C26	500	Mmfd.	CERAMIC	G8.395.12
C28	25	Mfd.	25 V	G8.386.35
C29	40	Mfd.	150 V	
C30	40	Mfd.	150 V	
C31	40	Mfd.	150 V	

RESISTORS

R1-R7	47KK	1/2 W	G8.314.21
R2-R5	47	1/2 W	G8.314.04
R3-R11	330 K	1/2 W	G8.314.26
R4	22 K	1/2 W	G8.314.41
R6	2.2 MEG	1/2 W	G8.314.31
R8	500 K	VOLUME CONTROL	G8.600.43
R9	10 MEG	1/2 W	G8.314.35
R10	330	.5 W	G8.314.09
R12	470 K	1/2 W	G8.314.27
R13	150	1 W	G8.317.15
R14	22	1 W	G8.314.02
R15	100	1 W	G8.319.06
R16	1000	1 W	G8.319.12
150 V	BALLAST RESISTOR		G8.323.00
200 V	BALLAST RESISTOR		G8.323.01
250 V	BALLAST RESISTOR		G8.323.02

COILS AND TRANSFORMERS

L1, L2	ANTENNA COIL ASSEMBLY (SW BAND #2)	G9.136.24
L3, L4, L5, L6	ANTENNA COIL ASSEMBLY (MW / SW Band #1)	G9.136.17
L7, L8	OSC. COIL ASSEMBLY (SW BAND #2)	G9.139.19
L9, L10	OSC. COIL ASSEMBLY (MW / SW BAND #1)	G9.139.27
T1	1st I.F. ASSEMBLY	G9.142.67
T2	2nd I.F. ASSEMBLY	G9.142.68
T3	OUTPUT TRANSFORMER	G9.142.58

MISCELLANEOUS PARTS

BACK COVER	G8.516.41
CABINET	G9.000.28
DIAL GLASS	G5.926.13
DIAL LAMP #47	G8.002.08
DIAL LIGHT SOCKET	G8.001.31
DIAL POINTER	G5.926.06
DIAL DIFFUSION SCREEN	G5.925.26
DIAL DIFFUSION SPRING	G5.600.02
DIAL POINTER DRIVE CORD	G8.104.10
DIAL DRIVE CORD SPRING	G5.600.03
KNOB, WITH DOT	G5.483.41
KNOB, PLAIN	G5.483.42
LINE CORD	W7.052.60
LOCTAL SOCKET	G8.550.95
OCTAL SOCKET	G8.532.07
PHONOGRAPH CONNECTOR	G8.532.13
SPEAKER	G9.107.36
SPEAKER BAFFLE ASSEMBLY	G9.117.71
SPEAKER GRILLE CLOTH	G9.109.28
TONE CONTROL AND PHONO SWITCH	G8.703.22
WAVERANGE SWITCH	G8.703.21

©John F. Rider

Compliments of www.nucow.com

Battery Operation

For operation on batteries it is necessary that the line cord plug be inserted into the changeover plate (see Fig. 2). The receiver may now be turned on by rotating the on-off switch to right and advancing volume control knob. (See Fig. 1).

Electric Operation

To operate this set on AC, open the rear of the case by pulling it back at the top. Then remove the plug from the plate where it has been inserted, (See Fig. 2) and pull the cord all the way out of the case. Close the rear of the case, making sure that the cord runs out through the slot at the side. Pulling out the plug from the changeover plate disconnects the batteries automatically and connects the receiver for power line operation.

Electric Operation 110-125 Volts AC-DC

For operation on the above voltage and current, the line switch MUST BE IN THE CORRECT POSITION 110-125V. AC-DC. Pin plug must always be in the BLACK socket. (See Fig. 2).

Electric Operation 210-230 Volts AC

For operation on the above voltage and current, the line switch MUST BE IN THE 210-230V. AC POSITION, and the pin plug must always be in the BLACK socket. (See Fig. 2).

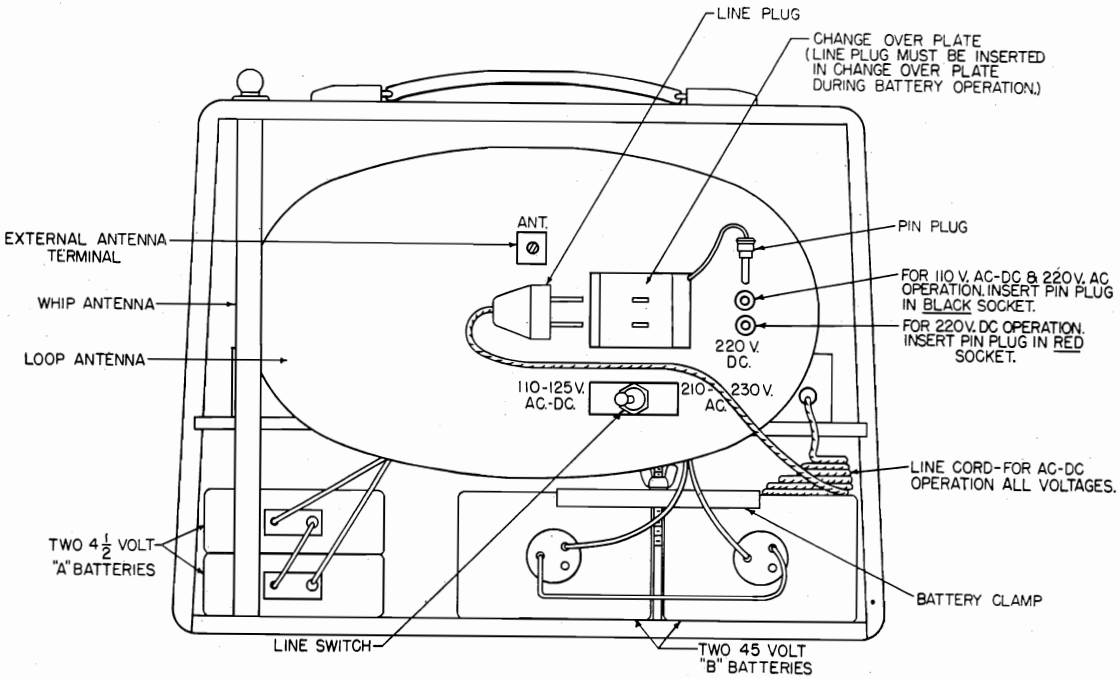

FIG. 2

©John F. Rider
Compliments of www.nucow.com

MODEL P-175

ALIGNMENT INSTRUCTIONS

USE BATTERY POWER WHENEVER POSSIBLE.

SET VOLUME CONTROL AT MAXIMUM VOLUME AND OUTPUT FROM SIGNAL GENERATOR NO. HIGHER THAN NECESSARY TO OBTAIN OUTPUT READING.

TUNING RANGE:- BROADCAST 535-1650 KC TROPIC 2.1-6.5 MC INTERNATIONAL 6.4-18.3 MC

USE INSULATED ALIGNMENT SCREWDRIVER FOR ADJUSTING.

DUMMY ANTENNA	SIGNAL GENERATOR COUPLING	BAND SWITCH POSITION	SIGNAL GEN. FREQUENCY	RADIO DIAL SETTING	OUTPUT METER	ADJUST	REMARKS
1 MFD	RF SECTION OF VARIABLE CONDENSER	BC	455 KC	1650 KC	ACROSS VOICE COIL	L1, L2, L3, L4	ADJUST FOR MAXIMUM
200 MMFD	ANTENNA TERMINAL	BC	1650 KC	FULLY OPEN	" "	C1	" " "
200 MMFD	" "	BC	1500 KC	1500 KC	" "	C2	" " "
200 MMFD	" "	BC	600 KC	600 KC	" "	C3	ROCK GANG & ADJUST FOR MAXIMUM OUTPUT RECHECK C1 & C2 ADJUSTMENTS AS GIVEN
400 ∿	" "	TROPIC	6.5 MC	FULLY OPEN	" "	C4	*ADJUST FOR MAXIMUM
400 ∿	" "	TROPIC	6.0 MC	6.0 MC	" "	C5	+ROCK GANG & ADJUST FOR MAXIMUM OUTPUT
400 ∿	" "	INTERNATIONAL	18.3 MC	FULLY OPEN	" "	C6	*ADJUST FOR MAXIMUM
400 ∿	" "	INTERNATIONAL	17 MC	17 MC	" "	C7	+ROCK GANG & ADJUST FOR MAXIMUM OUTPUT

* IF TWO PEAKS CAN BE OBTAINED, USE ONE WITH TRIMMER SCREW FURTHER OUT.
\+ " " " " " " " " " " " " IN

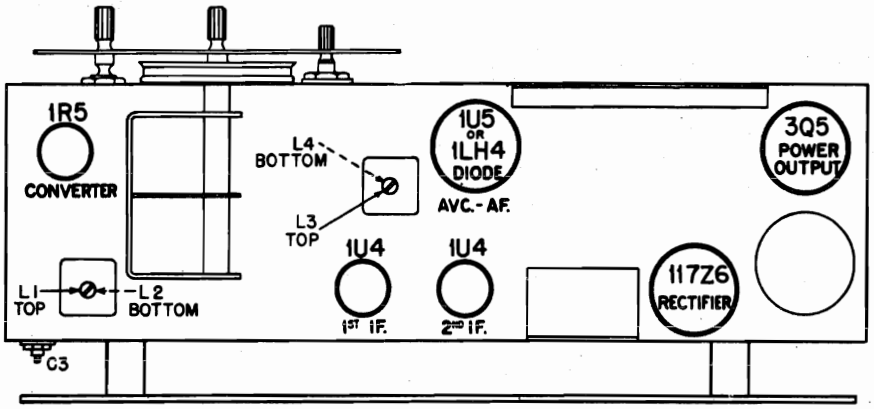

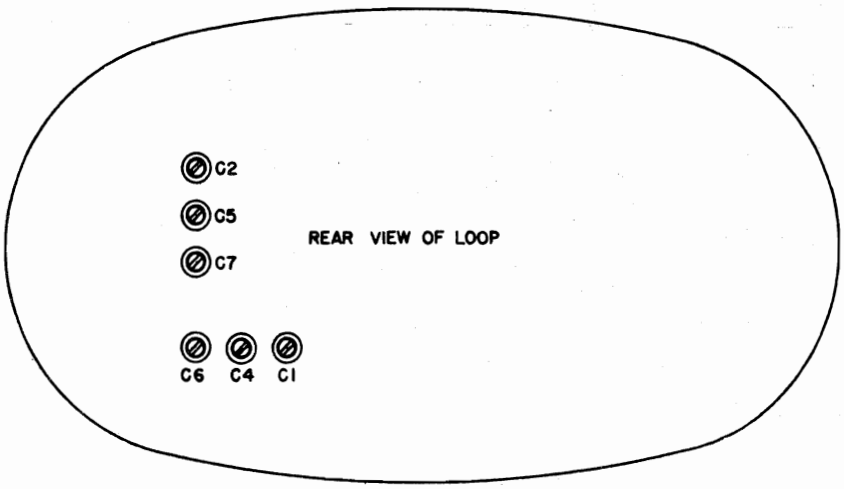

©John F. Rider

Compliments of www.nucow.com

MODEL P-175

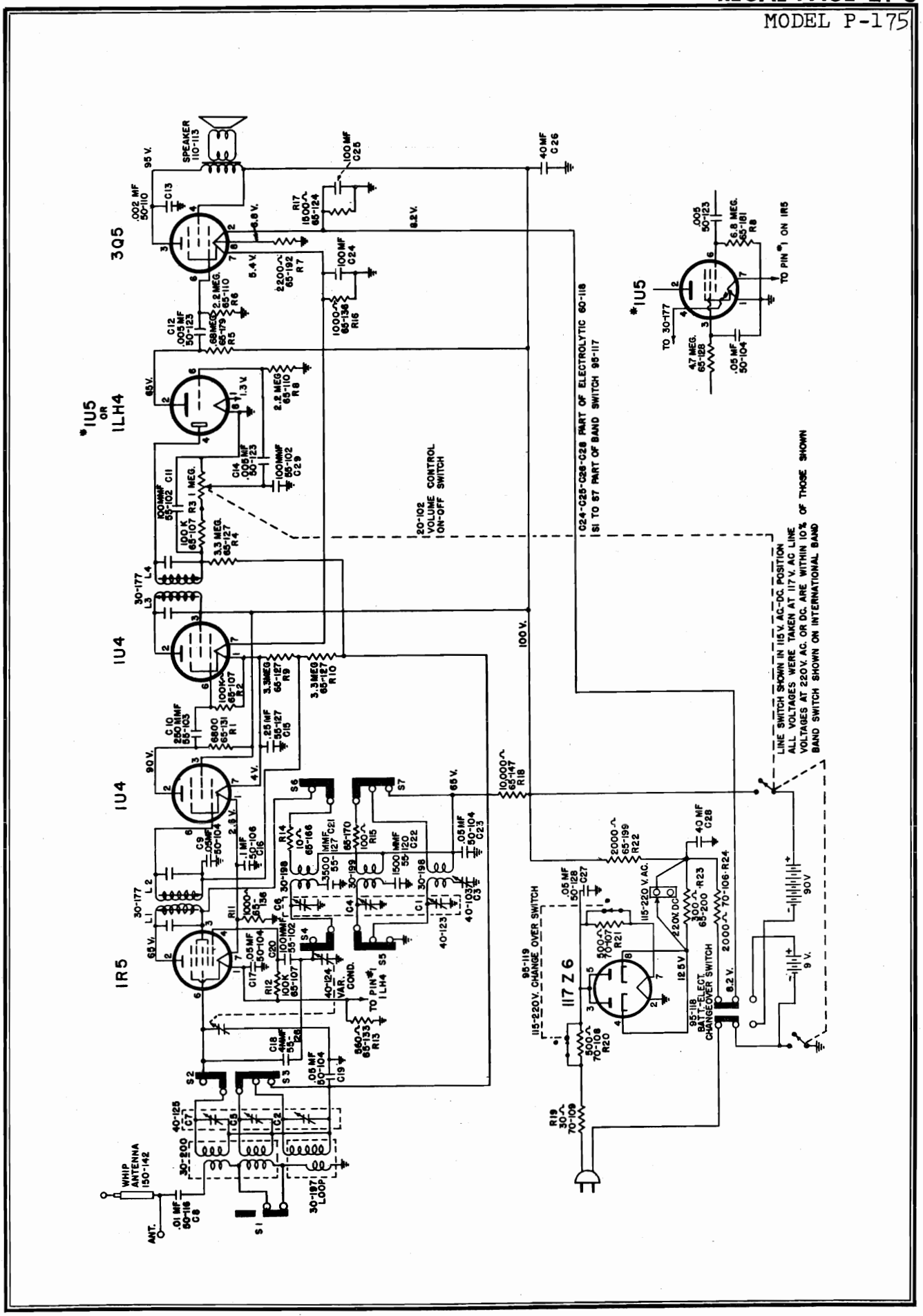

©John F. Rider

Compliments of www.nucow.com

MODEL 2000

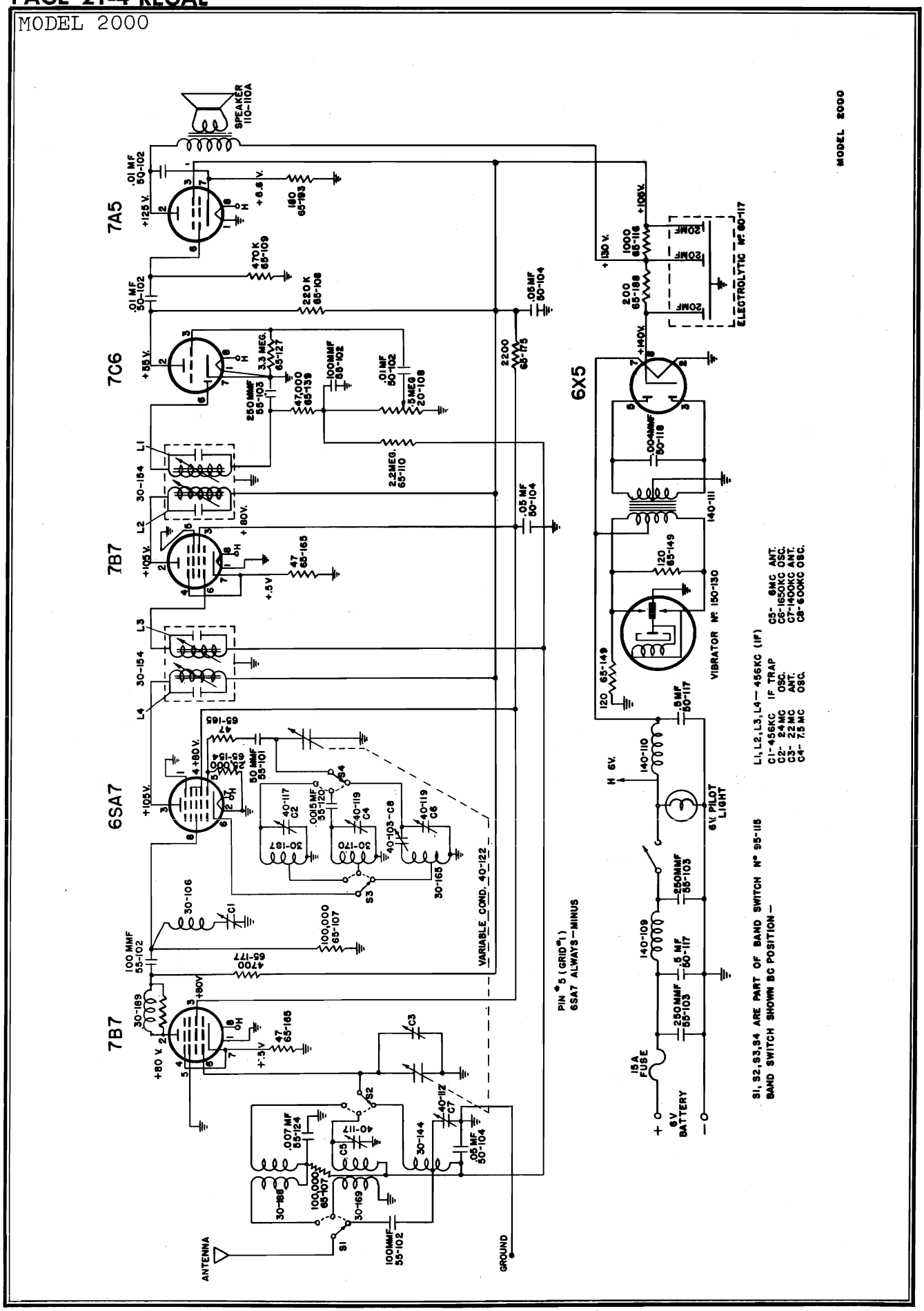

©John F. Rider

Compliments of www.nucow.com

MODELS 2000, 4963

ALIGNMENT INSTRUCTIONS

SET VOLUME CONTROL AT MAXIMUM VOLUME AND OUTPUT FROM SIGNAL GENERATOR NO HIGHER THAN IS NECESSARY TO OBTAIN OUTPUT READING

TUNING RANGE

BROADCAST 540-1650 KC , INTERNATIONAL – 7–24 MC , TROPIC 2.3–7.4 MC

	DUMMY ANTENNA	SIGNAL GENERATOR COUPLING ON	BAND SWITCH POSITION	SIGNAL GEN'R FREQUENCY	RADIO DIAL SETTING	OUTPUT METER	ADJUST	REMARKS
1	.1 MFD	PIN #6 ON 7B7 (RF) SOCKET	B C	456 KC	FULL OPEN	ACROSS VOICE COIL	L1, L2, L3, L4,	ADJUST FOR MAXIMUM OUTPUT
2	.1 MFD	PIN #6 ON 7B7 (RF) SOCKET	B C	456 KC	FULL OPEN	ACROSS VOICE COIL	C1	ADJUST FOR MINIMUM OUTPUT
3	200 OHMS	ANTENNA LEAD	INTERNATIONAL	24MC	FULL OPEN	ACROSS VOICE COIL	* C2	AJUST FOR MAXIMUM OUTPUT
4	200 OHMS	ANTENNA LEAD	INTERNATIONAL	20 MC	APPROX. 20 MC	ACROSS VOICE COIL	C3	ROCK GANG & ADJUST FOR MAXIMUM OUTPUT C3 ADJUSTMENT
5	200 OHMS	ANTENNA LEAD	TROPIC	7.4 MC	FULL OPEN	ACROSS VOICE COIL	+ C4	ADJUST FOR MAXIMUM OUTPUT
6	200 OHMS	ANTENNA LEAD	TROPIC	6 MC	APPROX. 6 MC	ACROSS VOICE COIL	C5	ADJUST FOR MAXIMUM OUTPUT
7	50 MMFD	ANTENNA LEAD	B C	1650 KC	FULL OPEN	ACROSS VOICE COIL	C6	ADJUST FOR MAXIMUM OUTPUT
8	50 MMFD	ANTENNA LEAD	B C	1400 KC	APPROX. 1400 KC	ACROSS VOICE COIL	C7	ADJUST FOR MAXIMUM OUTPUT
9	50 MMFD	ANTENNA LEAD	B C	600 KC	600 KC	ACROSS VOICE COIL	C8	ROCK GANG & ADJUST FOR MAXIMUM OUTPUT

* IF TWO PEAKS CAN BE OBTAINED, USE ONE WITH TRIMMER SCREW FURTHER IN.
\+ IF TWO PEAKS CAN BE OBTAINED, USE ONE WITH TRIMMER SCREW FURTHER OUT.

2000
4963

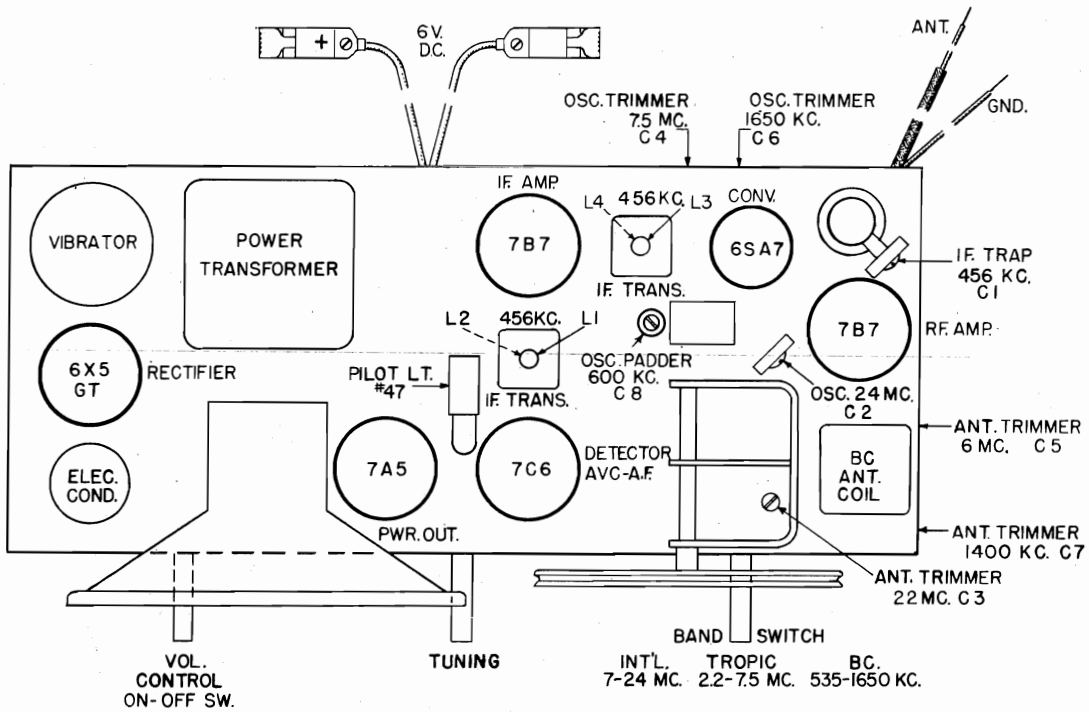

TUBE LAYOUT MODEL 2000

©John F. Rider

Compliments of www.nucow.com

MODELS 2000,
4963

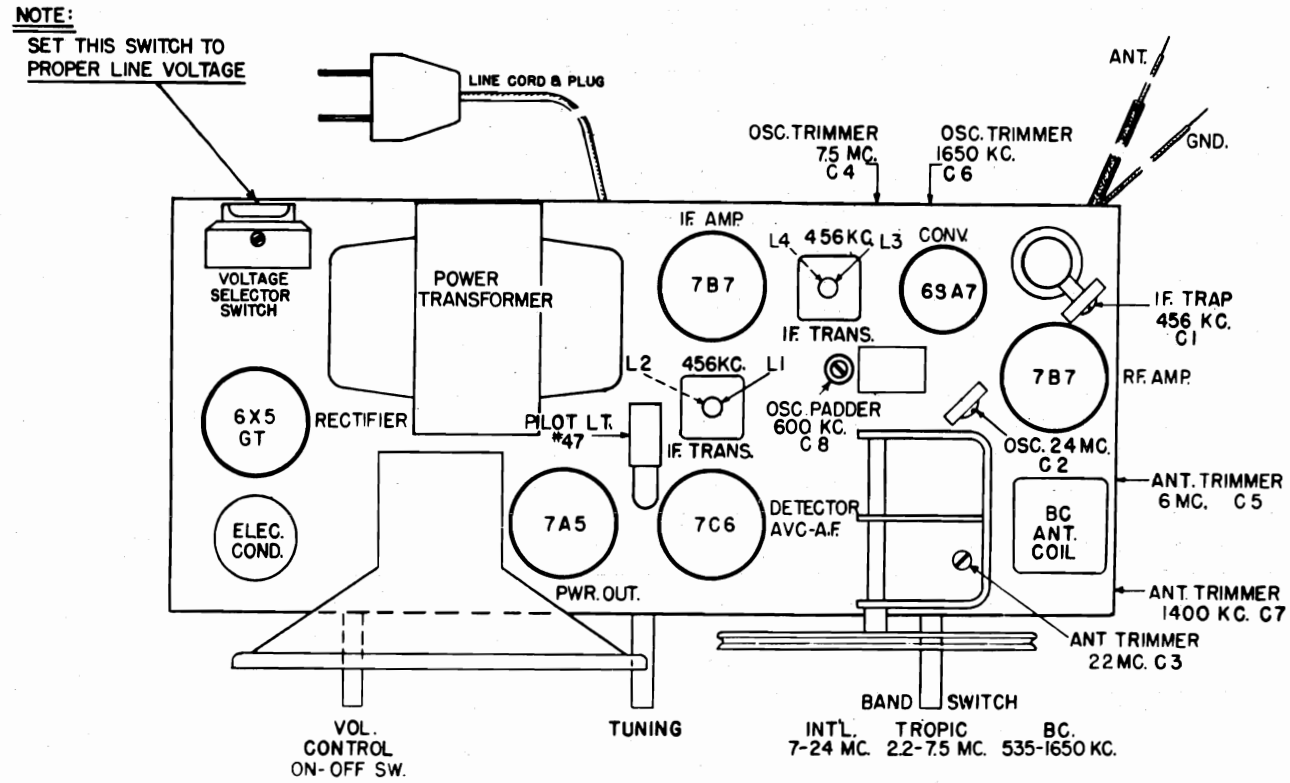

TUBE LAYOUT MODEL 4963

©John F. Rider

Compliments of www.nucow.com

MODEL 4963

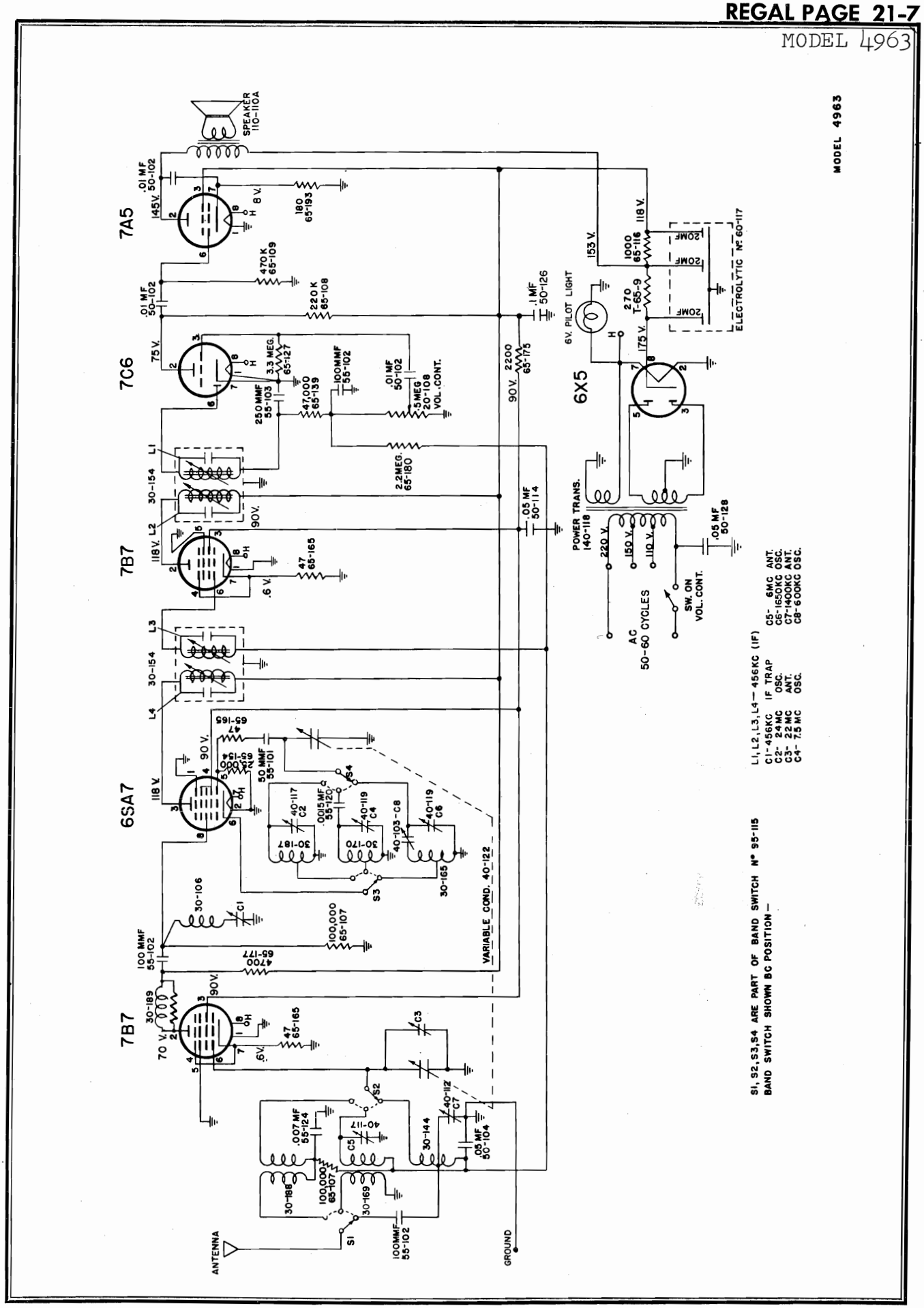

©John F. Rider

Compliments of www.nucow.com

Compliments of www.nucow.com

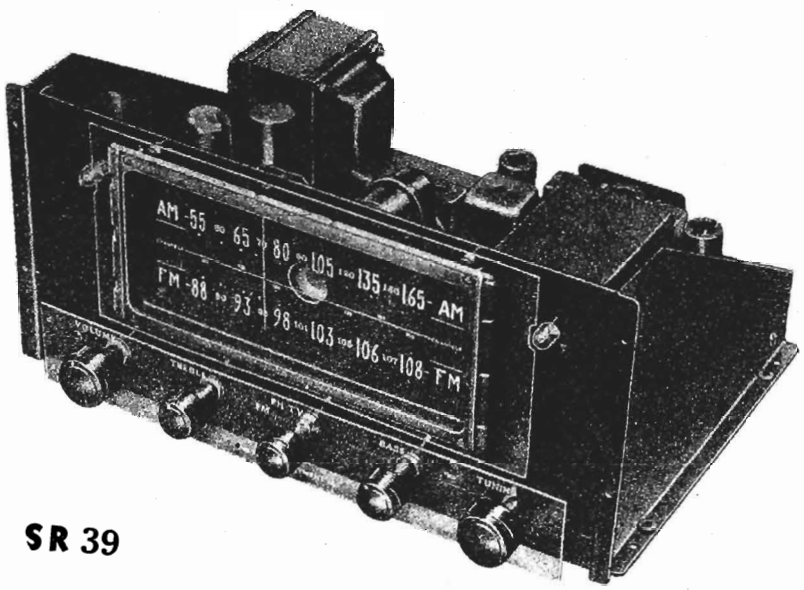

SR 39

A bandpass pre-stage tuned Radio Frequency section and one stage I.F. at 455 KC terminating in a tuned Infinite Impedence detector for those who insist on the best in a Standard Broadcast Receiver.

A Frequency Modulation Tuner employing a tuned R.F. Pre-stage for added sensitivity, a stable drift-free Triode Oscillator, two stages permiability tuned I.F. at 10.7 for superior F.M. performance and fully balanced static free Ratio Detector with 70% A.M. absorption.

Input jacks for phono pickups, either crystal pickup or properly compensated pre-amp for Variable Reluctance type pick-up and a jack for aural television on Selector Control Switch.

A new SR circuit for smooth electro-accoustical control of bass and treble emphasis allowing the controls of the audio amplifier to be pre-set.

Physical dimentions:- 14" wide, 7" high and 10" from escutcheon to back.

F.M. Sensitivity:- 10 microvolts.

Average output:- .4 volts.

Tubes: 3 6BA6; 1 each 6BE6; 6C4; 6AL5; 6SN7GT; 6SA7; 6SK7; 6SF7; 6E5 and 6X5.

Power Consumption:- 68 watts, 110-125 volts, 50-60 cycles.

ANTENNA REQUIREMENTS.
For best non-directional standard AM broadcast results a single wire five to ten feet in length connected to antenna terminal "A" will be sufficient. Additional selectivity to this efficient input circuit would tend to restrict the wide band reception capabilities of the detector.

For best F.M. results a 100 M.C. dipole should be installed well above surrounding obstructions. The twisted 300 ohm line from the dipole should be connected to antenna terminals "D" and "G". ("G" also grounds unit.)
A console type folded dipole is supplied with the tuner and will prove a satisfactory substitute in most cases where an external dipole is impractical.

INPUT JACKS.
All phono or TV audio signals as well as the AM and FM radio are subject to the volume and tone controls of the tuner.

The jack marked "MAG" is the input for a properly compensated pre amplifier when using the variable reluctance cartridge.

XTAL is the phono input for a standard crystal pickup.

The TV jack makes it possible to channel the audio of a television tuner thru the radio's amplifier and speaker.

The OUTPUT jack should be connected to the high impedence input control (250,000 to 500,000 ohms) of a quality audio amplifier. Use the prepared shielded lead supplied with the tuner. Choose a speaker capable of wide range reproduction.

A.C.POWER. SR39 is completely powerized for 110-125 volts 50-60 cycles. The power switch (on the Volume Control) also controls the A.C.recepticle on the back of the chassis for convenience in amplifier installation.

CAUTION
VENTILATION IS EXTREMELY IMPORTANT. No multi-tube unit should be housed in an insufficiently ventilated cabinet. Damage to the unit and the cabinet will result.

USE ONLY 1 AMP. FUSE.

©John F. Rider

Compliments of www.nucow.com

MODEL SR39

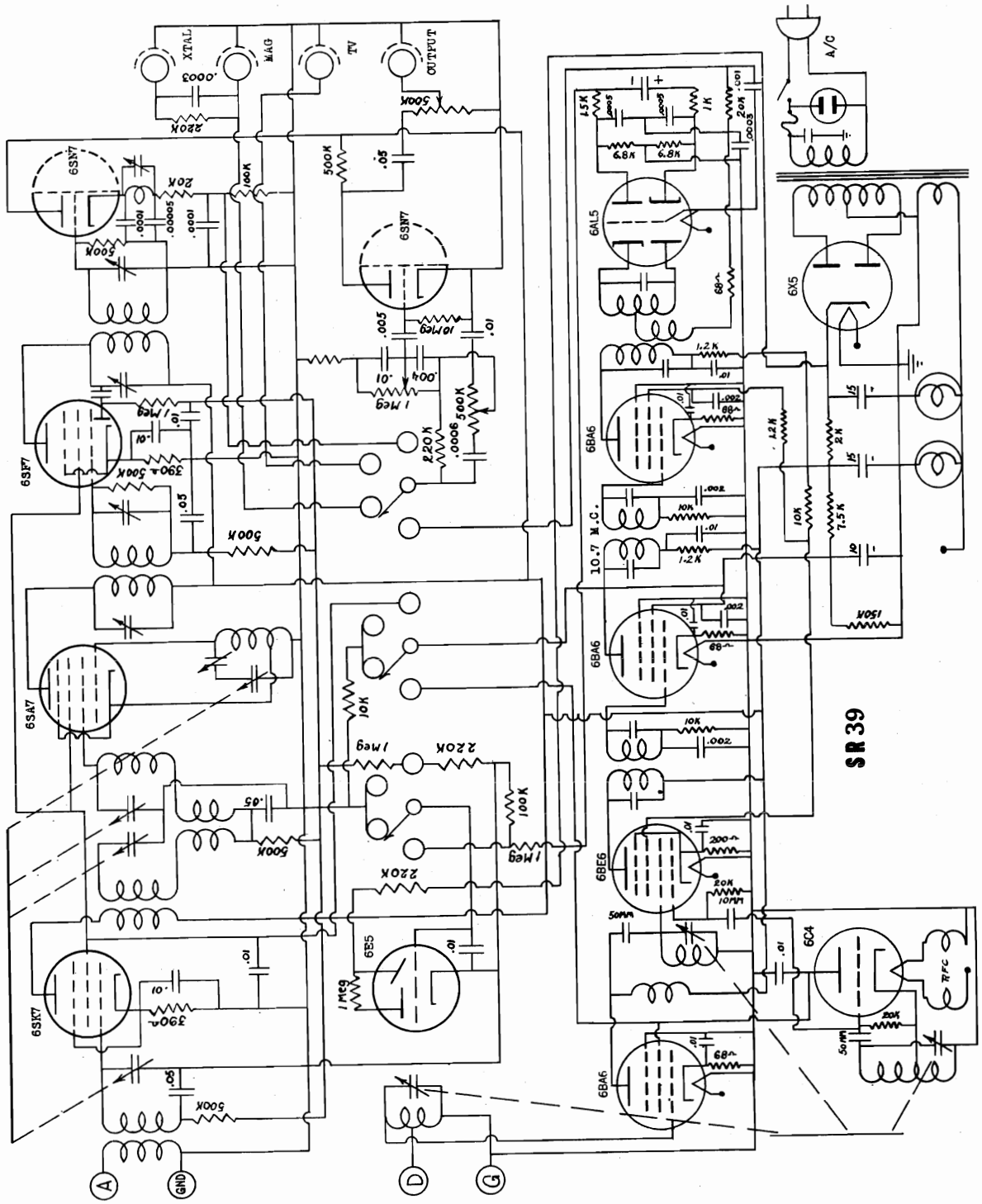

©John F. Rider

Compliments of www.nucow.com

GENERAL FEATURES

The Model 310 is a combination designed for the reception of radio broadcast programs and for the reproduction of phonograph records, television sound or other external sound. The receiver includes the following separate pieces of equipment: (1) chassis, (2) record changer, and (3) high fidelity speaker.

TECHNICAL DATA

Power Input — 105 Watts at 117 Volts, 50-60 cycles. (Phono motor 60 cycles, 25 watts additional.)

Tubes — Total 12 including two rectifiers.

Circuits — Superheterodyne with RF amplifier stage (three gang tuning condenser) on all bands. Three stage FM-IF amplification (10.7 mc). One stage AM-IF (455 kc). Ratio detector on FM. Drift compensation on RF section. Push-pull output with 6 db inverse feedback. Sound input for phono and for TV or other external sound.

Tuning Range — AM - 535 - 1620 kc.
FM - 87.5 - 108.5 mc.

Output — 10 watts (2-6V6GT tubes in push-pull). Less than 5% distortion at full output.

Sensitivity — AM 12 microvolts
FM 17 microvolts
(Carrier modulated 30% at 400 cycles. Output 500 milliwatts with 10 db signal to noise ratio.)

Fidelity — Overall 30 to 20,000 cps plus or minus 1 db. Separate bass and treble control. Phono input equalized for elimination of objectionable scratch level. AM and FM audio equalized to BC standards.

Speaker — Hi-fidelity 12 inch PM. 8 ohm voice coil.

TUBE REPLACEMENT

The Model 310 has the following tube complement:

Symbol	Tube	Application	Symbol	Tube	Application
V1	6BA6	RF Amplifier	V7	6AL5	Ratio Detector, FM
V2	6BE6	Conv. & AM Osc.	V8	6SQ7	1st Audio Amplifier
V3	6C4	FM Oscillator	V9	6SN7	2nd Audio Amplifier
V4	6BA6	IF Amp., FM-AM	V10	6V6GT	Audio Power Output
V5	6AU6	IF Amp., FM & 2nd Detector, AM	V11	6V6GT	Audio Power Output
V6	6AU6	IF Amp., FM	V12	5Y3GT	Rectifier

©John F. Rider

Compliments of www.nucow.com

FUSE REPLACEMENT

A fuse is provided for protection of the receiver against excessive power line voltages, and against failure of any component in the receiver which would cause heavy current drain and fire hazard. This fuse is accessible at the rear panel of the tuner chassis. CAUTION: Always replace the fuse with one of the same rating in the event the fuse is blown. If the fuse continues to blow after replacement trouble is indicated and the equipment should be removed from the cabinet for examination.

ALIGNMENT PROCEDURE

Test Equipment

1. Voltohmyst for DC measurements.
2. AM signal generator for 455 KC, 1500 KC, 600 KC, 10.7 MC, 89 MC and 107 MC.
3. AC voltmeter such as the Ballantine voltmeter.
4. An aligning tool is included with each receiver and is taped on the 1st FM-IF transformer can. Additional aligning tools may be had by ordering under part number 94V4707.

In order to reduce instability due to ground currents it is advisable to have a metal sheet covering the test bench and to place all generators and the receivers to be tested on this metal plate.

Alignment Procedure

The alignment is preferably performed in the following order: See Figure 1 for location of adjustments on chassis.

1. AM-IF
2. AM-RF
3. FM-IF
4. FM-RF

AM-IF Alignment

A signal generator capable of modulation and accurately set to 455 KC should be attached through a .01 MFD capacitor to the lug on the service selector switch which connects to the middle AM section of the gang condenser. A good ground point for the generator is the rear support bracket of the switch.

The AC voltmeter is placed across the secondary of the audio output transformer, which is loaded with a 8 ohm 10 watt resistor connected in place of the speaker voice coil. In the event this resistor is not available the speaker may be used if the noise can be tolerated. The volume, bass and treble controls must be full on, the service selector switch in the AM position, and the tuning dial in any convenient position that does not interfere with the AM-IF output signal.

©John F. Rider

Compliments of www.nucow.com

Apply sufficient input signal at 455 KC, 30% AM modulated at 400 cycles to give an indication of about 2 volts rms AC on the AC voltmeter across the secondary of the output transformer. With the use of an aligning tool the primary and secondary of the two AM-IF transformers are peaked for a maximum indication on the output voltmeter. As the receiver approaches correct alignment, reduce the input signal level so that the output never exceeds 3-4 volts AC. It is good practice to recheck the peaking of the transformers a second time, especially if the set was badly out of alignment. The normal AM-IF sensitivity is such that when 100 uV are applied with the signal generator, the output voltmeter will read 2 volts minimum.

AM-RF Alignment

Apply the signal generator to the lug on the service selector switch that supports the loop lead (loop not connected). The AC voltmeter remains attached as for the IF alignment. The operating controls also remain as for the IF adjustment of the receiver. Set the signal generator and receiver dials on 600 KC at 30% modulation with 400 cycles and adjust the AM oscillator core (top adjustment on the 1 1/8" square can toward rear of chassis) for a maximum indication on the output voltmeter. Keep the generator input low enough to prevent the voltmeter from reading above 3-4 volts AC at all times.

The AM converter transformer (top of 1 1/8" square can toward front of chassis) is now adjusted for a maximum output indication on the voltmeter.

The generator and receiver dials are now set at 1500 KC and the oscillator and converter gang condenser trimmers (front holes in the gang cover) are adjusted for a maximum output on AC output voltmeter.

The above procedures are repeated until the 1500 KC and 600 KC points on the generator and the receiver dials coincide without further adjustment of the cores or trimmer condensers.

A sensitivity of 10 uV or less at 400 cycles 30% modulation for a 3 volt AC output and a 10 db or greater signal to noise ratio is normal for this input point.

The loop is then attached to the receiver and the generator is applied to the loop tap which is available on the antenna strip at rear of the receiver. The generator and the receiver dials are set to 1500 K and the antenna trimmer capacitor on the 1st AM section of the gang condenser is adjusted for maximum output on the AC output voltmeter.

A sensitivity of 1 uV at 400 cycles 30% modulation for a 2 volt AC output with a 10 db signal to noise ratio or better at 1500 KC and 600 KC is normal for the receiver at this input point.

FM-IF Alignment

Place the service selector switch in the FM position. Apply a signal generator unmodulated, and set accurately to 10.7 megacycles, to the grid tap on the FM converter coil. The rear mounting bracket of the service selector switch provides a convenient ground point for the generator.

©John F. Rider

Compliments of www.nucow.com

A DC voltohmyst voltmeter is connected from ground to the negative side of the 5 MFD electrolytic capacitor (C-37) which is across the two 8200 ohm load resistors (R-30, R-31) of the ratio detector.

Enough signal at 10.7 MC is then applied to the receiver to give an indication on the voltohmyst above the residual voltage already present. Always keep the input level of the signal generator low enough to produce not more than negative 5 volts DC on the voltohmyst.

The following FM-IF transformer cores are then adjusted in the following order for a maximum indication on the DC voltmeter:

1. Primary of ratio detector (bottom of large can).
2. Primary and secondary of 3rd FM-IF transformer.
3. Primary and secondary of 2nd FM-IF transformer.
4. Primary and secondary of 1st FM-IF transformer.

If the receiver was badly mis-aligned it is advisable to repeat the above procedure for better alignment.

The voltohmyst is then connected to the audio output of the ratio detector which is the junction of the 47,000 ohm ½ watt resistor (R-27) and the 1500 MMFD capacitor (C-36) and ground.

By tuning the secondary of the ratio detector (top of large can) it is possible to produce both positive and negative swings of the DC voltmeter from a zero position. The proper tuned position is the zero position of the voltmeter between the positive and negative swings.

In order to check the relative sensitivity of the FM-IF system move the voltohmyst back to the first position from the negative side of the 5 MFD capacitor to ground. A normal sensitivity is indicated when it is necessary to apply between 300 and 700 uV for a negative 5 volts DC on the voltohmyst.

FM-RF Alignment

Connect a signal generator unmodulated and accurately set on 89 MC to the FM antenna terminals of the receiver through a resistor of 200 ohm to 270 ohm in the hot lead of the generator to match the 300 ohm input of the FM antenna coil. The DC voltmeter is connected as it was for the FM-IF alignment, between the negative side of the 5 MFD capacitor (C-37) and ground.

Set the tuning dial of the radio to 89 MC and adjust the FM oscillator core for a maximum DC output on the voltohmyst. Adjust the input level of the signal generator so as to produce a negative 3 to 5 volts DC on the voltmeter. The correct oscillator core position is when the core is just entering the coil from the bottom of the coil. The 2nd harmonic of the oscillator is used to produce the IF frequency. By compression or expansion of the converter and antenna FM coils it is possible to bring their circuits into alignment with the oscillator at 89 MC.

©John F. Rider

Compliments of www.nucow.com

As the set becomes more accurately aligned it may be necessary to reduce the input of the signal generator to maintain an output below a negative 5 volts DC.

Now reset the signal generator and the receiver dials to 107 MC and adjust the oscillator tubular trimmer and the compression trimmers on the FM converter and antenna sections of the gang condenser for a maximum indication on the output DC voltmeter.

Again reset the generator and receiver dials back to 89 MC and repeat the operations performed formerly at this frequency setting. This realigning at the high and low ends of the FM band is necessary until it is noticed that at both 89 MC and 107 MC the receiver has been aligned to the generator frequency without adjustment of either the core of the oscillator or the oscillator trimmer to bring them into alignment.

The converter and antenna coils have been properly aligned when either compression or expansion of the turns will give no increase in the output DC voltage at 89 MC and the converter and oscillator trimmer condenser adjustment will also give no increase in DC output voltage at 107 MC.

VOLTAGE TABLE

Tube	Type	Pin 1	Pin 2	Pin 3	Pin 4	Pin 5	Pin 6	Pin 7	Pin 8
V1	6BA6	0	0	AC 6.5	0	115	115	0	-
V2	6BE6	-7 to -10	.9	AC 6.5	0	125	100	0	-
V3	6C4	120	0	AC 5.4	0	0	-7 to -10	0	-
V4	6BA6	0	0	AC 6.5	0	120	110	1.3	-
V5	6AU6	0	0	AC 6.5	0	110	110	1.2	-
V6	6AU6	0	0	AC 6.5	0	110	110	1.3	-
V7	6AL5	0	0	AC 6.5	0	.6	0	-.6	-
V8	6SQ7	0	-.8	0	0	0	20	AC 6.8	0
V9	6SN7	0	75	2.8	5.2	110	20	AC 6.3	0
V10	6V6G	0	0	260	270	0	105	AC 6.3	0
V11	6V6G	0	0	260	270	0	20	AC 6.3	0
V12	5Y3	0	300	0	AC 320	0	AC 320	0	300

Voltage readings made with Voltohmyst. Line voltage adjusted to 117 V AC. All voltages measured between indicated pin and chassis frame. Unless noted all voltages are DC and positive to frame.

No signal input.
Voltages taken with the service selector switch in the FM position.
Volume control in the counterclockwise position.
Tone controls clockwise.

©John F. Rider

Compliments of www.nucow.com

MODEL 310

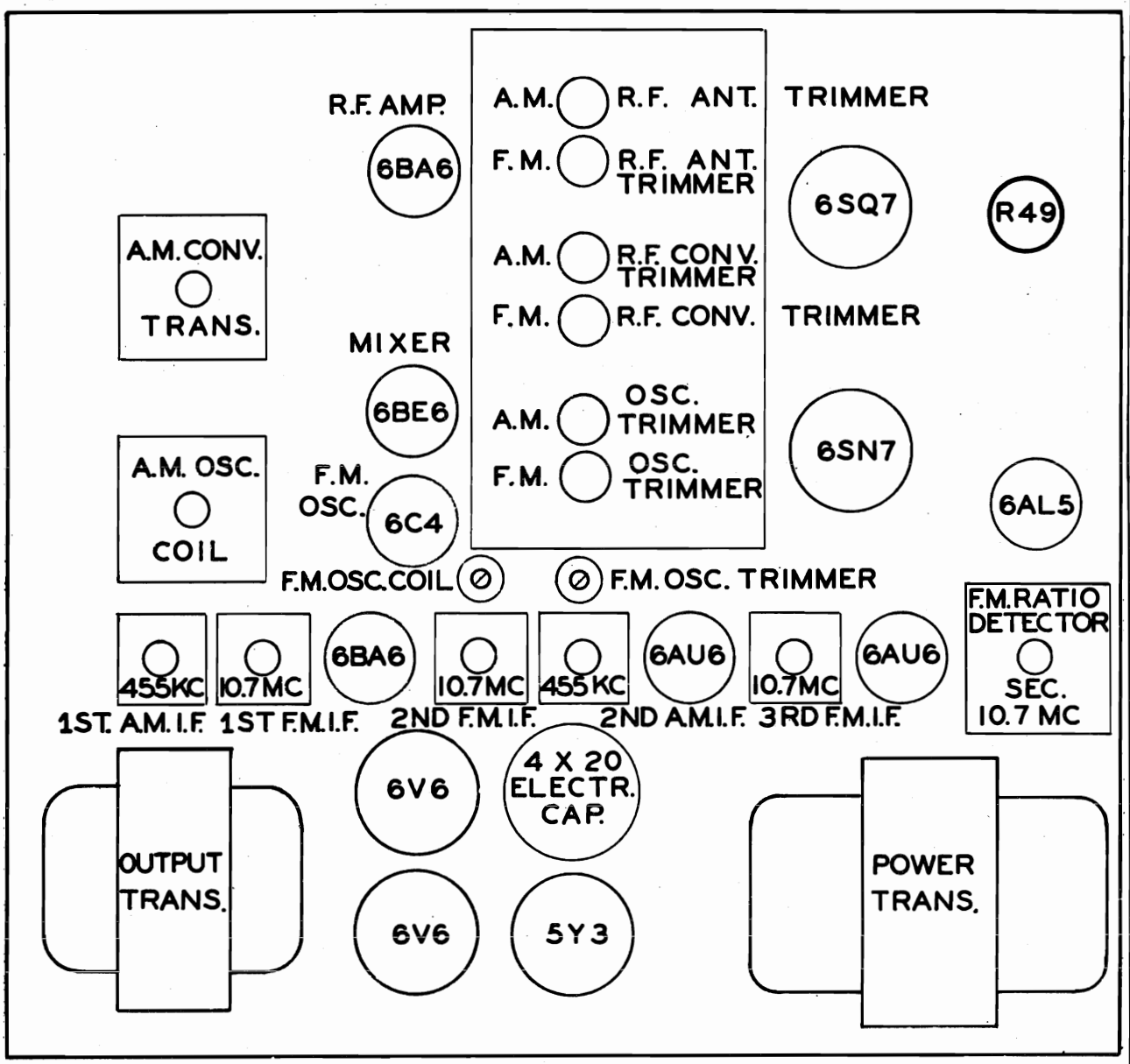

Figure 1 Model 310 Receiver Assembly

©John F. Rider

Compliments of www.nucow.com

RESISTANCE TABLE

Tube	Type	Pin 1	Pin 2	Pin 3	Pin 4	Pin 5	Pin 6	Pin 7	Pin 8
V1	6BA6	700 K	0	0	0	inf.	inf.	82	-
V2	6BE6	22 K	82	0	0	inf.	inf.	27	-
V3	6C4	inf.	inf.	3	0	inf.	47 K	0	-
V4	6BA6	200 K	0	0	0	inf.	inf.	82	-
V5	6AU6	60 K	0	0	0	inf.	inf.	220	-
V6	6AU6	0	0	0	0	inf.	inf.	220	-
V7	6AL5	inf.	inf.	0	0	10 K	0	10 K	-
V8	6SQ7	0	4.7 M	0	0	0	inf.	0	0
V9	6SN7	17 K	inf.	2.2 K	500 K	inf.	12 K	0	0
V10	6V6G	inf.	.2	inf.	inf.	220 K	10 K	0	250
V11	6V6G	inf.	0	inf.	inf.	220 K	10 K	0	250
V12	5Y3	inf.	inf.	inf.	75	inf.	80	inf.	inf.

Resistance readings taken with voltohmyst connected between pin indicated and chassis frame. Values given are in ohms except where K indicates times 1000 and M indicates times 1 megohm.

All controls to the counterclockwise or off position.
Range switch in FM position.

Parts List By Symbol Designation

Symbol Desig.	Function	Description	Part No.
(C1 (C2 (C3	Main tuning capacitor	Capacitor, variable, 3 gang AM-FM	15U4569
C4	Grid coupling	Capacitor,ceramic 1500 MMFD 350 V	15L3459
C5	Cathode bypass, RF	Capacitor,ceramic 5000 MMFD Hi-Kap, 500 V	15L3462
C6	Cathode bypass, IF	Same as C5	
C7	Screen bypass, RF	Same as C5	
C8	Screen bypass, Conv.	Same as C5	
C9	Screen bypass, IF	Same as C5	
C10	Screen bypass, IF	Same as C5	
C11	Heater bypass, RF	Same as C5	
C12	Heater bypass, IF	Same as C5	
C13	Heater bypass, IF	Same as C5	
C14	Heater bypass, IF	Same as C5	
C15	Heater bypass, ratio detector	Same as C5	
C16	Grid decoupling, RF	Same as C5	
C17	Coupling, cathode follower	Capacitor, paper, .05 MFD 600 V, miniature tubular	15L3467
C18	Grid decoupling, Conv.	Capacitor, paper, .05 MFD 200 V, miniature tubular	15S4221
C19	Cathode bypass, audio	Capacitor, electrolytic, 25 MF 50 V, tubular	15B638
C20	RF coupling, FM	Capacitor, silver ceramic, 25 MMFD 10% 500 V NPO	15D3165
C21	Grid coupling oscillator	Capacitor, ceramic 51 MMFD 5% 500 V	15L3458
C22	Grid coupling, audio	Same as C17	
C23	Plate bypass, Conv.	Same as C5	
C24	Drift compensation	Capacitor, compensator, silver ceramic, 4 MMFD plus or minus .25 MMFD Hi-Q, temp coeff., insulated N-750	15V4678
C25	Grid oscillator, FM	Same as C21	
C26	Plate decoupling oscillator, FM	Same as C4	
C27	Plate bypass oscillator, FM	Same as C5	
C28	Plate decoupling, IF	Same as C5	
C29	Grid capacitor, AM detector	Capacitor,ceramic, 100 MMFD 10% 500 V	15L3460
(C30 (C31	Grid filter, AM Detector	Capacitor, silver ceramic, 2x100 MMFD 20% 500 V 3 wire leads	15D2923
C32	Bypass, AGC	Capacitor, paper, .1 MFD 200 V, miniature tubular	15S4298
C33	Diode load	Capacitor, mica, 390 MMFD 10% 500 V	15B799
C34	Diode load	Same as C33	
C35	Ratio detector decoupling	Same as C33	

©John F. Rider

Compliments of www.nucow.com

Parts List By Symbol Designation

Symbol Desig.	Function	Description	Part No.
C36	Audio filter, ratio detector	Same as C4	
C37	Ratio detector	Capacitor, electrolytic, 5 MFD 150 V, tubular	15V4599
C38	Screen bypass	Same as C17	
C39	IF grid bypass	Same as C5	
C40	Trimmer, FM oscillator	Capacitor, trimmer, .5-5 MMFD	15V4602
C41	Coupling, Audio Amp.	Capacitor, paper, .01 MFD 200 V, miniature tubular	15L3463
C42	Coupling, Audio Grid	Capacitor, paper, .1 MFD 600 V, miniature tubular	15L3468
C43	RF filter, Audio Amp.	Same as C29	
C44	Bypass, treble control	Same as C41	
C45	Bypass, treble control	Capacitor, paper, .005 MFD 20% 600 V	15H2603
C46	Bypass, bass control	Capacitor, paper, .02 MFD 200 V, tubular miniature	15U4580
C47	Bypass, bass control	Same as C45	
C48	Cathode bypass, audio	Capacitor, electrolytic, 25 MFD 25 V, tubular	15B795
C49	Plate coupling, audio	Same as C17	
C50	Coupling, audio amp.	Same as C46	
(C51 (C52 (C53 (C54	Filter, high voltage rectifier	Capacitor, electrolytic, 4x20 MFD 450 V	15L3588
C55	Plate decoupling, 1st audio	Same as C42	
E1	Dial light	Lamp, 6-8 V .150 A #47 brown	49A168
E2	Dial light	Same as E1	
E3	Overload protection	Fuse, 3 amp, 3 AG	37A162
E4	Main tuning knob	Knob, station selector, 1 7/8" dia., brass	47V4603
E5	Control knob	Knob, 1 1/8" dia. black bakelite, push-on type	47V4604
E6	Align IF	Aligning tool	94V4707
J1	Loop connection to receiver	Receptacle, 3 contact	67U4716
(J2 ((J3	Television sound connection Phono pickup connection	Receptacle, dual, insulated	67V4657
J4	Phono motor power	Receptacle, 4 contact	67B645
J5	Speaker connection	Receptacle, 2 contact	67V4673

Parts List By Symbol Designation

Symbol Desig.	Function	Description	Part No.
L1	AM signal intercept	Loop	1V4594
L2	FM antenna tuning	Coil	20V4625
L3	Coupling, RF stage	Choke	17V4668
L4	Tuning, FM-RF	Coil	20V4626
L5	Oscillator, AM	Coil	20V4621
L6	Oscillator, FM	Coil	20V4627
L7	Filter choke, RF-IF	Choke	17L3378
L8	Filter choke, RF-IF	Same as L7	
L9	Filter choke, RF-IF	Same as L7	
L10	Heater FM oscillator	Choke	17V4683
LS1	Loudspeaker	Speaker 12" PM - 8 ohm voice coil	85U4709
P1	Loop to receiver	Plug, 3 contact	65U4714
R1	Grid coupling, RF	Resistor, composition, .47 meg 10% ½ watt	70L3404
R2	Grid decoupling, RF	Resistor, composition, .1 meg 10% ½ watt	70L3401
R3	Cathode bias, RF	Resistor, composition, 82 ohms 5% ½ watt	70L3391
R4	Cathode bias, Conv.	Same as R3	
R5	Cathode bias, IF	Same as R3	
R6	Cathode bias, IF	Resistor, composition, 220 ohms 10% ½ watt	70V4783
R7	Cathode bias, IF	Same as R6	
R8	Screen decoupling, RF	Resistor, composition, 1000 ohms 10% ½ watt	70L3393
R9	Screen decoupling, IF	Same as R8	
R10	Screen decoupling, Conv.	Resistor, composition, 3300 ohms 10% ½ watt	70L3394
R11	Screen decoupling, IF	Same as R10	
R12	Screen decoupling, IF	Same as R10	
R13	Grid decoupling, Conv.	Same as R2	
R14	Oscillator grid, Conv.	Resistor, composition, 22,000 ohms 10% ½ watt	70L3397
R15	Plate decoupling, Conv.	Same as R8	
R16	Oscillator grid, FM	Resistor, composition, 47,000 ohms 10% ½ watt	70L3399
R17	Grid loading FM-IF	Same as R14	
R18	Grid decoupling, FM-IF	Same as R2	
R19	Grid decoupling, FM-IF	Resistor, composition, .22 meg 10% ½ watt	70L3403
R20	Grid decoupling	Same as R14	
R21	Grid decoupling	Same as R16	

©John F. Rider
Compliments of www.nucow.com

Parts List By Symbol Designation			
Symbol Desig.	Function	Description	Part No.
R22	Grid	Resistor, composition, 27 ohms 10% ½ watt	70V4692
R23	Decoupling, AGC circuit	Resistor, composition, 1 meg 20% ½ watt	70L3406
R24	Plate coupling, FM oscillator	Same as R8	
R25	Plate decoupling, 1st audio	Same as R2	
R26	Decoupling, ratio detector	Resistor, composition, 47 ohms 10% ½ watt	70L3429
R27	De-emphasis, FM detector	Same as R16	
R28	Diode load, ratio detector	Resistor, composition, 1500 ohms 10% ½ watt	70L3525
R29	Diode load, ratio detector	Same as R28	
R30	Audio load, ratio detector	Resistor, composition, 8200 ohms 10% ½ watt	70L3523
R31	Audio load, ratio detector	Same as R30	
R32	Volume control	Potentiometer, volume, ½ meg	70V4583
R33	Grid loading, audio amp.	Resistor, composition, 4.7 meg 20% ½ watt	70L3530
R34	Plate load, audio amp.	Same as R2	
R35	Tone control network	Same as R16	
R36	Treble control	Potentiometer, treble, ½ meg	70V4584
R37	Bass control	Potentiometer, bass off-on, ½ meg	70V4585
R38	Bass control network	Same as R14	
R39	Grid load, audio amp.	Same as R2	
R40	Cathode bias, audio amp.	Resistor, composition, 2200 ohms 10% ½ watt	70L3432
R41	Cathode follower	Resistor, composition, 56 ohms 10% ½ watt	70V4628
R42	Cathode follower decoupling	Resistor, composition, 560 ohms 10% ½ watt	70L3527
R43	Cathode circuit	Resistor, composition, 10,000 ohms 10% ½ watt	70L3396
R44	Cathode bias, Audio Amp.	Same as R28	
R45	Plate coupling, audio amp.	Same as R16	
R46	Grid	Same as R19	
R47	Cathode bias, audio	Resistor, 220 ohms 10% 5 watt, Candohm	70U4717
R48	Filter	Same as R47	
R49	Filter	Resistor, wirewound, 2500 ohms 10% 15 watt	70U4718
R50	Grid	Same as R19	
R51	Grid	Same as R19	

Parts List By Symbol Designation			
Symbol Desig.	Function	Description	Part No.
SW1	AM, FM, Phono, TV switching	Switch, range, 4 position	89V4630
T1	Interstage coupling, Conv.	Coil	20V4620
T2	Interstage coupling, FM	Coil	20V4623
T3	Interstage coupling, AM	Coil	20V4622
T4	Interstage coupling, FM	Same as T2	
T5	Interstage coupling, AM	Same as T3	
T6	Interstage coupling, FM	Same as T2	
T7	Ratio detector transformer	Coil	20V4624
T8	Power	Transformer	91U4576
T9	Output	Transformer	91U4577
V1	RF Amplifier	Tube - 6BA6	92G2871
V2	Converter and Oscillator	Tube - 6BE6	92V4631
V3	FM Oscillator	Tube - 6C4	92B597
V4	IF Amplifier, FM-AM	Same as V1	
V5	IF Amplifier, FM & 2nd Detector, AM	Tube - 6AU6	92C2659
V6	IF Amplifier, FM	Same as V5	
V7	Ratio detector, FM	Tube - 6AL5	92G2870
V8	1st Audio Amplifier	Tube - 6SQ7	92V4632
V9	2nd Audio Amplifier	Tube - 6SN7	92A230
V10	Audio Power Output	Tube - 6V6GT	92E1061
V11	Audio Power Output	Same as V10	
V12	Rectifier	Tube - 5Y3GT	92G480
X1	Socket for V1	Socket, 7 contact, miniature type	82B663
X2	Socket for V2	Socket, 7 contact, miniature, mica filled, top mounting	82V4636
X3	Socket for V3	Same as X2	
X4	Socket for V4	Same as X1	
X5	Socket for V5	Same as X1	
X6	Socket for V6	Same as X1	
X7	Socket for V7	Same as X1	
X8	Socket for V8	Socket, 8 contact octal, black bakelite type MIP-8	82S4412
X9	Socket for V9	Same as X8	
X10	Socket for V10	Same as X8	
X11	Socket for V11	Same as X8	
X12	Socket for V12	Same as X8	

©John F. Rider
Compliments of www.nucow.com

MODEL 310

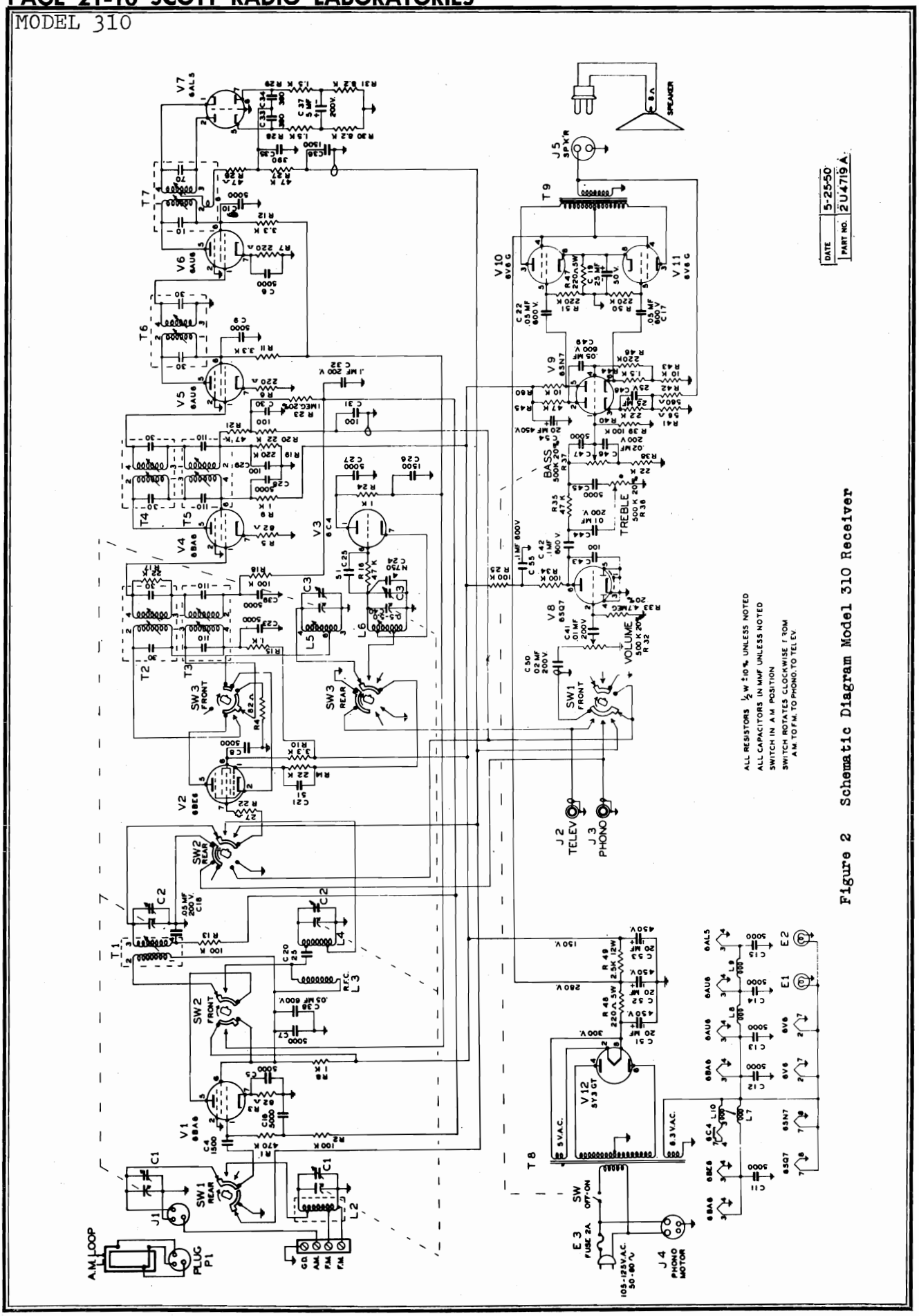

Figure 2 Schematic Diagram Model 310 Receiver

©John F. Rider

Compliments of www.nucow.com

MODELS 510; 510K, Kenilworth; 510S, Sheffield

GENERAL FEATURES

The Model 510 is a combination designed for the reception of radio broadcast programs and for the reproduction of phonograph records, television sound or other external sound. The receiver includes the following separate pieces of equipment: (1) radio-phono chassis, (2) power amplifier, (3) record changer, and (4) coaxial high fidelity speaker.

TECHNICAL DATA

Power Input	140-150 Watts at 117 Volts, 50-60 cycles. (Phono motor 60 cycles, 25 watts additional.)
Tubes	Total 14 including two rectifiers.
Circuits	Superheterodyne with RF amplifier stage (three gang tuning condenser) on all bands. Three stage FM IF amplification (10.7 mc). One stage AM IF (455 kc). Ratio detector on FM. Drift compensation on RF section. Push-pull output with 6 db inverse feedback. Separate B plus supplies for power amplifier and tuner sections for reduction of temperatures and to prevent damage to components through surges. Sound input for phono and for TV or other external sound.
Tuning Range	AM - 535 - 1620 kc. FM - 87.5 - 108.5 mc.
Output	20 watts (2-6L6 tubes in push-pull). Less than 5% distortion at full output.
Sensitivity	AM 12 microvolts FM 17 microvolts (Carrier modulated 30% at 400 cycles. Output 500 milliwatts with 10 db signal to noise ratio.)
Fidelity	Overall 30 to 20,000 cps plus or minus 1 db. Separate bass and treble control. Phono input equalized for elimination of objectionable scratch level. AM and FM audio equalized to BC standards.
Speaker	Hi-fidelity 12 inch coaxial PM. 8 ohm voice coil.

TUBE REPLACEMENT

The Model 510 has the following tube complement:

Symbol	Tube	Application	Symbol	Tube	Application
V1	6BA6	RF Amplifier	V8	6SQ7	1st Audio Amplifier
V2	6BE6	Conv. & AM Osc.	V9	6SN7	2nd Audio Amplifier
V3	6C4	FM Oscillator	V10	6SN7	3rd Audio Amplifier
V4	6BA6	IF Amp., FM-AM	V11	6L6G	Audio Power Output
V5	6AU6	IF Amp., FM & 2nd Detector, AM	V12	6L6G	Audio Power Output
			V13	5Y3GT	Rectifier
V6	6AU6	IF Amp., FM	V14	25Z6GT	Rectifier
V7	6AL5	Ratio Detector, FM			

©John F. Rider

Compliments of www.nucow.com

MODELS 510; 510K,
Kenilworth; 510S,
Sheffield

FUSE REPLACEMENT

A fuse is provided for protection of the receiver against excessive power line voltages, and against failure of any component in the receiver which would cause heavy current drain and fire hazard. This fuse is accessible at the rear panel of the tuner chassis. CAUTION: Always replace the fuse with one of the same rating in the event the fuse is blown. If the fuse continues to blow after replacement trouble is indicated and the equipment should be removed from the cabinet for examination.

ALIGNMENT PROCEDURE

Test Equipment

1. Voltohmyst for DC measurements.
2. AM signal generator for 455 KC, 1500 KC, 600 KC, 10.7 MC, 89 MC and 107 MC.
3. AC voltmeter such as the Ballantine voltmeter.
4. An aligning tool is included with each receiver and is taped on the 1st FM-IF transformer can. Additional aligning tools may be had by ordering under part number 94V4707.

In order to reduce instability due to ground currents it is advisable to have a metal sheet covering the test bench and to place all generators and the receivers to be tested on this metal plate.

Alignment Procedure

The alignment is preferably performed in the following order: See Figure 1 for location of adjustments on chassis.

1. AM-IF
2. AM-RF
3. FM-IF
4. FM-RF

AM-IF Alignment

A signal generator capable of modulation and accurately set to 455 KC should be attached through a .01 MFD capacitor to the lug on the service selector switch which connects to the middle AM section of the gang condenser. A good ground point for the generator is the rear support bracket of the switch.

The AC voltmeter is placed across the secondary of the audio output transformer, which is loaded with a 8 ohm 10 watt resistor connected in place of the speaker voice coil. In the event this resistor is not available the speaker may be used if the noise can be tolerated. The volume, bass and treble controls must be full on, the service selector switch in the AM position, and the tuning dial in any convenient position that does not interfere with the AM-IF output signal. Apply sufficient input signal at 455 KC, 30% AM modulated at 400 cycles to give an indication of about 2 volts rms AC on the AC voltmeter across the secondary of the output transformer. With the use of an aligning tool the primary and secondary of the two AM-IF transformers are peaked for a maximum indication on the output voltmeter. As the receiver approaches correct alignment, reduce the input signal level so that the output never exceeds 3-4 volts AC. It is good prac-

©John F. Rider

Compliments of www.nucow.com

tice to recheck the peaking of the transformers a second time, especially if the set was badly out of alignment. The normal AM-IF sensitivity is such that when 100 uV are applied with the signal generator, the output voltmeter will read 2 volts minimum.

AM-RF Alignment

Apply the signal generator to the lug on the service selector switch that supports the loop lead (loop not connected). The AC voltmeter remains attached as for the IF alignment. The operating controls also remain as for the IF adjustment of the receiver. Set the signal generator and receiver dials on 600 KC at 30% modulation with 400 cycles and adjust the AM oscillator core (top adjustment on the 1 1/8" square can toward rear of chassis) for a maximum indication on the output voltmeter. Keep the generator input low enough to prevent the voltmeter from reading above 3-4 volts AC at all times.

The AM converter transformer (top of 1 1/8" square can toward front of chassis) is now adjusted for a maximum output indication on the voltmeter.

The generator and receiver dials are now set at 1500 KC and the oscillator and converter gang condenser trimmers (front holes in the gang cover) are adjusted for a maximum output on AC output voltmeter.

The above procedures are repeated until the 1500 KC and 600 KC points on the generator and the receiver dials coincide without further adjustment of the cores or trimmer condensers.

A sensitivity of 10 uV or less at 400 cycles 30% modulation for a 3 volt AC output and a 10 db or greater signal to noise ratio is normal for this input point.

The loop is then attached to the receiver and the generator is applied to the loop tap which is available on the antenna strip at rear of the receiver. The generator and the receiver dials are set to 1500 KC and the antenna trimmer capacitor on the 1st AM section of the gang condenser is adjusted for maximum output on the AC output voltmeter.

A sensitivity of 1 uV at 400 cycles 30% modulation for a 2 volt AC output with a 10 db signal to noise ratio or better at 1500 KC and 600 KC is normal for the receiver at this input point.

FM-IF Alignment

Place the service selector switch in the FM position. Apply a signal generator unmodulated, and set accurately to 10.7 megacycles, to the grid tap on the FM converter coil. The rear mounting bracket of the service selector switch provides a convenient ground point for the generator.

A DC voltohmyst voltmeter is connected from ground to the negative side of the 5 MFD electrolytic capacitor (C-37) which is across the two 8200 ohm load resistors (R-30, R-31) of the ratio detector.

Enough signal at 10.7 MC is then applied to the receiver to give an indication on the voltohmyst above the residual voltage already present. Always keep the input level of the signal generator low enough to produce not more than negative 5 volts DC on the voltohmyst.

The following FM-IF transformer cores are then adjusted in the following order for a maximum indication on the DC voltmeter:

1. Primary of ratio detector (bottom of large can).

©John F. Rider

Compliments of www.nucow.com

MODELS 510; 510K, Kenilworth;
510S, Sheffield

2. Primary and secondary of 3rd FM-IF transformer.

3. Primary and secondary of 2nd FM-IF transformer.

4. Primary and secondary of 1st FM-IF transformer.

If the receiver was badly mis-aligned it is advisable to repeat the above procedure for better alignment.

The voltohmyst is then connected to the audio output of the ratio detector which is the junction of the 47,000 ohm ½ watt resistor (R-27) and the 1500 MMFD capacitor (C-36) and ground.

By tuning the secondary of the ratio detector (top of large can) it is possible to produce both positive and negative swings of the DC voltmeter from a zero position. The proper tuned position is the zero position of the voltmeter between the positive and negative swings.

In order to check the relative sensitivity of the FM-IF system move the voltohmyst back to the first position from the negative side of the 5 MFD capacitor to ground. A normal sensitivity is indicated when it is necessary to apply between 300 and 700 uV for a negative 5 volts DC on the voltohmyst.

FM-RF Alignment

Connect a signal generator unmodulated and accurately set on 89 MC to the FM antenna terminals of the receiver through a resistor of 200 ohm to 270 ohm in the hot lead of the generator to match the 300 ohm input of the FM antenna coil. The DC voltmeter is connected as it was for the FM-IF alignment, between the negative side of the 5 MFD capacitor (C-37) and ground.

Set the tuning dial of the radio to 89 MC and adjust the FM oscillator core for a maximum DC output on the voltohmyst. Adjust the input level of the signal generator so as to produce a negative 3 to 5 volts DC on the voltmeter. The correct oscillator core position is when the core is just entering the coil from the bottom of the coil. The 2nd harmonic of the oscillator is used to produce the IF frequency. By compression or expansion of the converter and antenna FM coils it is possible to bring their circuits into alignment with the oscillator at 89 MC.
As the set becomes more accurately aligned it may be necessary to reduce the input of the signal generator to maintain an output below a negative 5 volts DC.

Now reset the signal generator and the receiver dials to 107 MC and adjust the oscillator tubular trimmer and the compression trimmers on the FM converter and antenna sections of the gang condenser for a maximum indication on the output DC voltmeter.

Again reset the generator and receiver dials back to 89 MC and repeat the operations performed formerly at this frequency setting. This realigning at the high and low ends of the FM band is necessary until it is noticed that at both 89 MC and 107 MC the receiver has been aligned to the generator frequency without adjustment of either the core of the oscillator or the oscillator trimmer to bring them into alignment.

©John F. Rider

Compliments of www.nucow.com

MODELS 510; 510K, Kenilworth; 510S, Sheffield

The converter and antenna coils have been properly aligned when either compression or expansion of the turns will give no increase in the output DC voltage at 89 MC and the converter and oscillator trimmer condenser adjustment will also give no increase in DC output voltage at 107 MC.

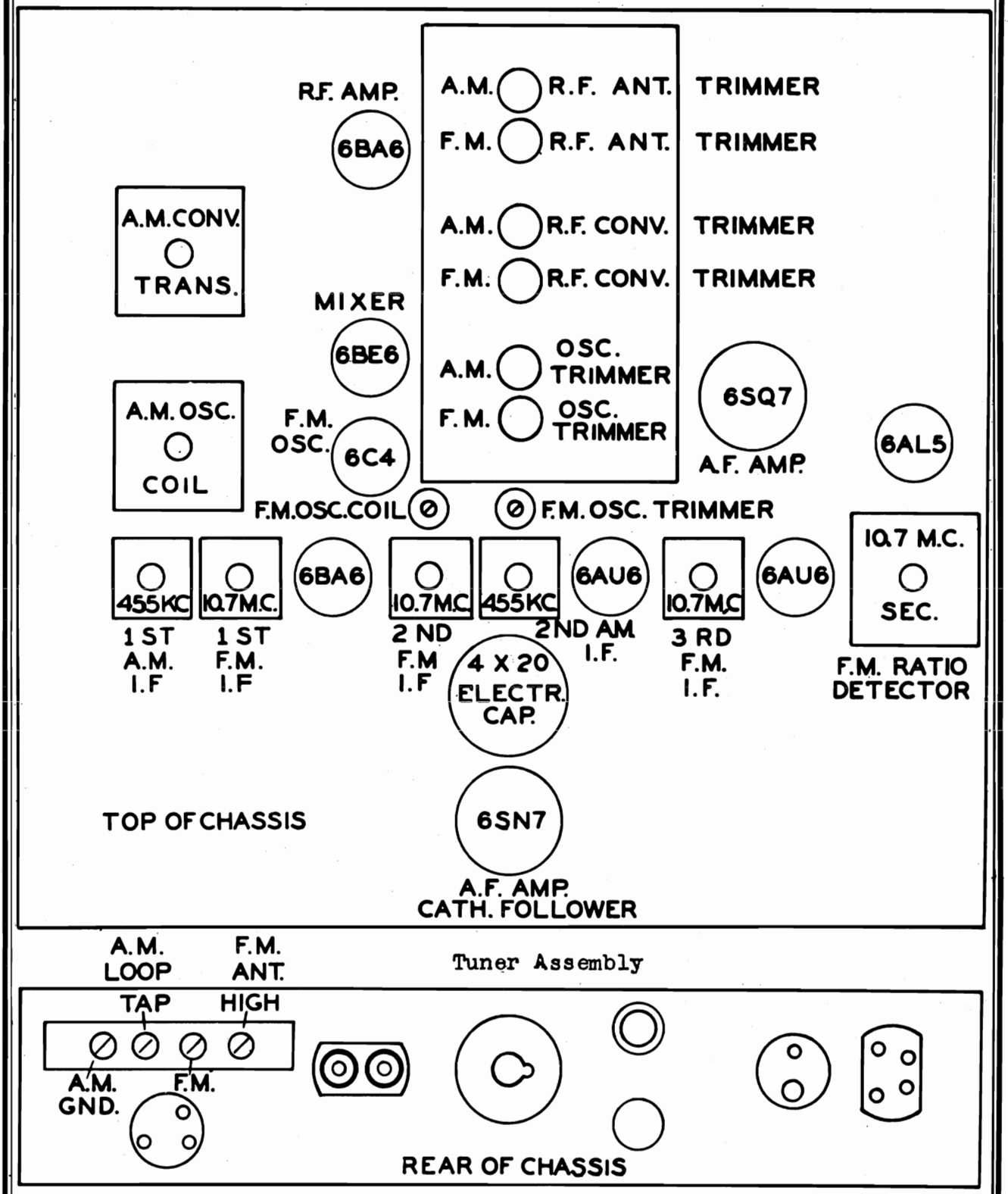

FIG. 1

©John F. Rider

Compliments of www.nucow.com

VOLTAGE TABLE

Tube	Type	Pin 1	Pin 2	Pin 3	Pin 4	Pin 5	Pin 6	Pin 7	Pin 8
V1	6BA6	0	0	AC 6.5	0	120	120	1.5	-
V2	6BE6	-7 to -10	.9	AC 6.5	0	125	110	0	-
V3	6C4	130	0	AC 6.5	0	130	-7 to -10	0	-
V4	6BA6	0	0	AC 6.5	0	120	120	1.5	-
V5	6AU6	0	0	AC 6.5	0	110	110	.7 to .9	-
V6	6AU6	0	0	AC 6.5	0	110	110	.7 to .9	-
V7	6AL5	0	0	AC 6.5	0	.6	0	-.6	-
V8	6SQ7	0	-.8	0	0	0	90	AC 6.8	0
V9	6SN7	0	150	6	40	270	55	AC 6.8	0
V10	6SN7	66	210	78	66	210	78	0	AC 6.8
V11	6L6G	0	AC 6.8	360	275	0	73	0	15
V12	6L6G	0	AC 6.8	360	275	0	73	0	15
V13	5Y3	0	400	0	AC 390	0	AC 390	0	400
V14	25Z6	0	0	AC 170	200	AC 170	0	0	200

Voltage readings made with Voltohmyst. Line voltage adjusted to 117 V AC. All voltages measured between indicated pin and chassis frame. Unless noted all voltages are DC and positive to frame.

No signal input.
Voltages taken with the service selector switch in the FM position.
Volume control in the counterclockwise position.
Tone controls clockwise.

RESISTANCE TABLE

Tube	Type	Pin 1	Pin 2	Pin 3	Pin 4	Pin 5	Pin 6	Pin 7	Pin 8
V1	6BA6	700 K	0	0	0	inf.	inf.	82	-
V2	6BE6	22 K	82	0	0	inf.	inf.	27	-
V3	6C4	inf.	inf.	0	0	inf.	47 K	0	-
V4	6BA6	200 K	0	0	0	inf.	inf.	82	-
V5	6AU6	60 K	0	0	0	inf.	inf.	82	-
V6	6AU6	0	0	0	0	inf.	inf.	82	-
V7	6AL5	inf.	inf.	0	0	10 K	0	10 K	-
V8	6SQ7	0	4.7 M	0	0	0	inf.	0	0
V9	6SN7	19 K	inf.	2.2 K	500 K	inf.	12 K	0	0
V10	6SN7	230 K	inf.	11 K	230 K	inf.	11 K	0	0
V11	6L6G	inf.	.2	inf.	inf.	470 K	10 K	0	170
V12	6L6G	inf.	.2	inf.	inf.	470 K	10 K	0	170
V13	5Y3	inf.	inf.	inf.	5	inf.	5	inf.	inf.
V14	25Z6	inf.	inf.	2	inf.	2	inf.	inf.	inf.

Resistance readings taken with voltohmyst connected between pin indicated and chassis frame. Values given are in ohms except where K indicates times 1000 and M indicates times 1 megohm.

All controls to the counterclockwise or off position.
Range switch in FM position.

©John F. Rider

Compliments of www.nucow.com

Parts List By Symbol Designation

Symbol Desig.	Function	Description	Part No.
(C1 (C2 (C3	Main tuning capacitor	Capacitor, variable, 3 gang AM-FM	15U4569
C4	Grid coupling	Capacitor, ceramic 1500 MMFD 350 V	15L3459
C5	Cathode bypass, RF	Capacitor, ceramic 5000 MMFD Hi-Kap, 500 V	15L3462
C6	Cathode bypass, IF	Same as C5	
C7	Screen bypass, RF	Same as C5	
C8	Screen bypass, Conv.	Same as C5	
C9	Screen bypass, IF	Same as C5	
C10	Screen bypass, IF	Same as C5	
C11	Heater bypass, RF	Same as C5	
C12	Heater bypass, IF	Same as C5	
C13	Heater bypass, IF	Same as C5	
C14	Heater bypass, IF	Same as C5	
C15	Heater bypass, ratio detector	Same as C5	
C16	Grid decoupling, RF	Same as C5	
C17	Grid decoupling, RF	Capacitor, paper, .05 MFD 200 V, miniature tubular	15S4221
C18	Grid decoupling, Conv.	Same as C17	
C19	AGC bypass, AM	Same as C17	
C20	RF coupling, FM	Capacitor, silver ceramic, 25 MMFD 10% 500 V NPO	15D3165
C21	Grid coupling oscillator	Capacitor, ceramic 51 MMFD 5% 500 V	15L3458
C22	Plate bypass, Conv.	Capacitor, paper, .05 MFD 400 V, miniature tubular	15L3466
C23	Plate bypass, Conv.	Same as C5	
C24	Drift compensation	Capacitor, compensator, silver ceramic, 4 MMFD plus or minus .25 MMFD Hi-Q, temp coeff. insulated N-750	15V4678
C25	Grid oscillator, FM	Same as C21	
C26	Plate decoupling oscillator, FM	Same as C4	
C27	Plate bypass oscillator, FM	Same as C5	
C28	Plate decoupling, IF	Same as C22	
C29	Grid capacitor, AM detector	Capacitor, ceramic, 100 MMFD 10% 500 V	15L3460
(C30 (C31	Grid filter, AM detector	Capacitor, silver ceramic, 2x100 MMFD 20% 500 V 3 wire leads	15D2923
C32	Bypass, AGC	Capacitor, paper, .1 MFD 200 V, miniature tubular	15S4298
C33	Diode load	Capacitor, mica, 390 MMFD 10% 500 V	15B799
C34	Diode load	Same as C33	
C35	Ratio detector decoupling	Same as C33	

Parts List By Symbol Designation

Symbol Desig.	Function	Description	Part No.
C36	Audio filter, ratio detector	Same as C4	
C37	Ratio detector	Capacitor, electrolytic, 5 MFD 150 V, tubular	15V4599
(C38 (C39 (C40	Filter, low frequency	Capacitor, electrolytic, 10/10/10/40, 450 V	15L3539
C41	Coupling, Audio Amp.	Capacitor, paper, .01 MFD 200 V, miniature tubular	15L3563
C42	Coupling, Audio Grid	Capacitor, paper, .1 MFD 400 V, miniature tubular	15V4685
C43	RF filter, Audio Amp.	Same as C29	
C44	Bypass, treble control	Same as C41	
C45	Bypass, treble control	Capacitor, paper, .005 MFD 20% 600 V	15H2603
C46	Bypass, bass control	Same as C40	
C47	Bypass, bass control	Same as C45	
C48	Cathode bypass, audio	Capacitor, electrolytic, 25 MFD 25 V, tubular	15B795
C49	Plate coupling, audio	Capacitor, paper, .05 MFD 600 V, miniature tubular	15L3467
C50	Coupling, Audio Amp.	Capacitor, paper, .02 MFD 200 V, tubular miniature	15U4580
C51	Coupling, cathode follower	Same as C22	
C60	Trimmer, FM oscillator	Capacitor, trimmer, .5-5 MMFD	15V4602
C61	IF grid bypass	Same as C5	
C62	Screen bypass	Same as C22	
(C52 (C53	Filter, low voltage rectifier	Capacitor, electrolytic, 2 x 60 MFD 200 V	15L3438
(C54 (C55 (C56	Filter, high voltage rectifier	Capacitor, electrolytic, 4x20 MFD 450 V	15L3588
C57	Grid coupling, power amplifier	Same as C49	
C58	Grid coupling, power amplifier	Same as C49	
C59	Cathode bypass, power amplifier	Capacitor, electrolytic, 25 MF 50 V, tubular	15B638
E1	Dial light	Lamp, 6-8 V .150 A #47 brown	49A168
E2	Dial light	Same as E1	
E3	Overload protection	Fuse, 3 amp, 3 AG	37A162
E4	Main tuning knob	Knob, station selector, 1 7/8" dia., brass	47V4603

©John F. Rider

Compliments of www.nucow.com

Parts List By Symbol Designation

Symbol Desig.	Function	Description	Part No.
E5	Control knob	Knob, 1 1/8" dia. black bakelite, push-on type	47V4604
E6	Align IF	Aligning tool	94V4707
J1	Loop connection to receiver	Receptacle, 3 contact	67L3560
(J2	Television sound connection	Receptacle, dual, insulated	67V4657
(J3	Phono pickup connection		
J4	Power cable connection	Receptacle, 12 contact	82S4305
J5	Phono motor power	Receptacle, 4 contact	67B645
J6	Speaker connection	Receptacle, 2 contact	67V4673
L1	AM signal intercept	Loop	1V4594
L2	FM antenna tuning	Coil	20V4625
L3	Coupling, RF stage	Choke	17V4668
L4	Tuning, FM-RF	Coil	20V4626
L5	Oscillator, AM	Coil	20V4621
L6	Oscillator, FM	Coil	20V4627
L7	Filter choke, RF-IF	Choke	17L3378
L8	Filter choke, RF-IF	Same as L7	
L9	Filter choke, RF-IF	Same as L7	
L10	Filter choke, hum	Choke	17L3312
LS1	Loudspeaker	Speaker, 12" coaxial, Jensen K210, 8 ohm voice coil	85V4593
P1	Loop to receiver	Plug, 3 contact	65L3559
P2	Amplifier to tuner	Plug, 12 contact	65S4301
R1	Grid coupling, RF	Resistor, composition, .47 meg 10% ½ watt	70L3404
R2	Grid decoupling, RF	Resistor, composition, .1 meg 10% ½ watt	70L3401
R3	Cathode bias, RF	Resistor, composition, 82 ohms 5% ½ watt	70L3391
R4	Cathode bias, Conv.	Same as R3	
R5	Cathode bias, IF	Same as R3	
R6	Cathode bias, IF	Same as R3	
R7	Cathode bias, IF	Same as R3	

Parts List By Symbol Designation

Symbol Desig.	Function	Description	Part No.
R8	Screen decoupling, RF	Resistor, composition, 1000 ohms 10% ½ watt	70L3393
R9	Screen decoupling, IF	Same as R8	
R10	Screen decoupling, Conv.	Resistor, composition, 3300 ohms 10% ½ watt	70L3394
R11	Screen decoupling, IF	Same as R10	
R12	Screen decoupling, IF	Same as R10	
R13	Grid decoupling, Conv.	Same as R2	
R14	Oscillator grid, Conv.	Resistor, composition, 22,000 ohms 10% ½ watt	70L3397
R15	Plate decoupling, Conv.	Same as R8	
R16	Oscillator grid, FM	Resistor, composition, 47,000 ohms 10% ½ watt	70L3399
R17	Grid loading, FM-IF	Same as R14	
R18	Grid decoupling, FM-IF	Same as R2	
R19	Grid decoupling, FM-IF	Resistor, composition, .22 meg 10% ½ watt	70L3403
R20	Grid decoupling	Same as R14	
R21	Grid decoupling	Same as R16	
R22	Grid loading, FM-IF	Same as R14	
R23	Decoupling, AGC circuit	Resistor, composition, 1 meg 20% ½ watt	70L3406
R24	Plate coupling, FM oscillator	Same as R8	
R25	Grid loading, FM-IF	Same as R14	
R26	Decoupling, ratio detector	Resistor, composition, 47 ohms 10% ½ watt	70L3429
R27	De-emphasis, FM detector	Same as R16	
R28	Diode load, ratio detector	Resistor, composition, 1500 ohms 10% ½ watt	70L3525
R29	Diode load, ratio detector	Same as R28	
R30	Audio load, ratio detector	Resistor, composition, 8200 ohms 10% ½ watt	70L3523
R31	Audio load, ratio detector	Same as R30	
R32	Volume control	Potentiometer, volume, ½ meg	70V4583
R33	Grid loading, audio amp.	Resistor, composition, 4.7 meg 20% ½ watt	70L3530
R34	Plate load, audio amp.	Same as R2	
R35	Tone control network	Same as R16	
R36	Treble control	Potentiometer, treble, 1/2 meg	70V4584
R37	Bass control	Potentiometer, bass off-on, 1/2 meg	70V4585
R38	Bass control network	Same as R14	
R39	Grid load, audio amp.	Same as R2	
R40	Cathode bias, audio amp.	Resistor, composition, 2200 ohms 10% ½ watt	70L3432

©John F. Rider

Compliments of www.nucow.com

Parts List By Symbol Designation			
Symbol Desig.	Function	Description	Part No.
R41	Cathode follower	Resistor, composition, 56 ohms 10% ½ watt	70V4628
R42	Cathode follower decoupling	Resistor, composition, 560 ohms 10% ½ watt	70L3527
R43	Cathode circuit	Resistor, composition, 10,000 ohms 10% ½ watt	70L3396
R44	Cathode bias, Audio Amp.	Resistor, composition, 1800 ohms 10% ½ watt	70V4700
R45	Plate coupling, Audio Amp.	Same as R16	
R46	Plate decoupling, Audio Amp.	Same as R8	
R47	Power filter	Resistor, 750 ohms 10% 5 watt, Candohm	70V4662
R58	Grid resistor	Resistor, composition, 27 ohms 10% ½ watt	70V4692
R59	Grid loading	Same as R1	
R48	Filter	Resistor, 375 ohms 10% 5 watt, Candohm	70V4589
R49	Filter	Resistor, composition, 3900 ohms 10% 2 watt	70V4693
R50	Cathode coupling	Resistor, composition, 10,000 ohms 10% 1 watt	70L3427
R51	Cathode bias	Resistor, composition, 680 ohms 10% ½ watt	70V4691
R52	Grid	Same as R19	
R53	Plate coupling	Same as R50	
R54	Grid	Same as R1	
R55	Grid	Same as R1	
R56	Cathode bias	Resistor, 167 ohms 10% 5 watt, Candohm	70V4588
R57	Used on two tap transformer only	Resistor, wirewound, 10 ohms 10 watt 10%	70E2630
SW1	AM, FM, Phono, TV switching	Switch, range, 4 position	89V4630
T1	Interstage coupling, Conv.	Coil	20V4620
T2	Interstage coupling, FM	Coil	20V4623
T3	Interstage coupling, AM	Coil	20V4622
T4	Interstage coupling, FM	Same as T2	
T5	Interstage coupling, AM	Same as T3	

Parts List By Symbol Designation			
Symbol Desig.	Function	Description	Part No.
T6	Interstage coupling, FM	Same as T2	
T7	Ratio detector transformer	Coil	20V4624
T8	Power	Transformer	91V4666
T9	Output	Transformer	91V4667
V1	RF amplifier	Tube - 6BA6	92G2871
V2	Converter and Oscillator, AM	Tube - 6BE6	92V4631
V3	FM oscillator	Tube - 6C4	92B597
V4	IF amplifier, FM-AM	Same as V1	
V5	IF amplifier, FM-AM Detector	Tube - 6AU6	92C2659
V6	IF amplifier, FM	Same as V5	
V7	Ratio detector	Tube - 6AL5	92G2870
V8	Audio amplifier	Tube - 6SQ7	92V4632
V9	Audio amplifier and cathode follower	Tube - 6SN7	92A230
V10	Driver for power stage	Same as V9	
V11	Audio power amplifier	Tube - 6L6G	92A233
V12	Audio power amplifier	Same as V11	
V13	High voltage rectifier	Tube - 5Y3	92B480
V14	Low voltage rectifier	Tube - 25Z6GT	92E1419
X1	Socket for V1	Socket, 7 contact, miniature type	82B663
X2	Socket for V2	Socket, 7 contact, miniature, mica filled, top mounting	82V4636
X3	Socket for V3	Same as X2	
X4	Socket for V4	Same as X1	
X5	Socket for V5	Same as X1	
X6	Socket for V6	Same as X1	
X7	Socket for V7	Same as X1	
X8	Socket for V8	Socket, 8 contact octal, black bakelite type MIP-8	82S4412
X9	Socket for V9	Same as X8	
X10	Socket for V10	Socket, 8 contact octal, bakelite	82E1322
X11	Socket for V11	Same as X10	
X12	Socket for V12	Same as X10	
X13	Socket for V13	Same as X10	
X14	Socket for V14	Same as X10	

©John F. Rider
Compliments of www.nucow.com

MODELS 510; 510K,
Kenilworth; 510S,
Sheffield

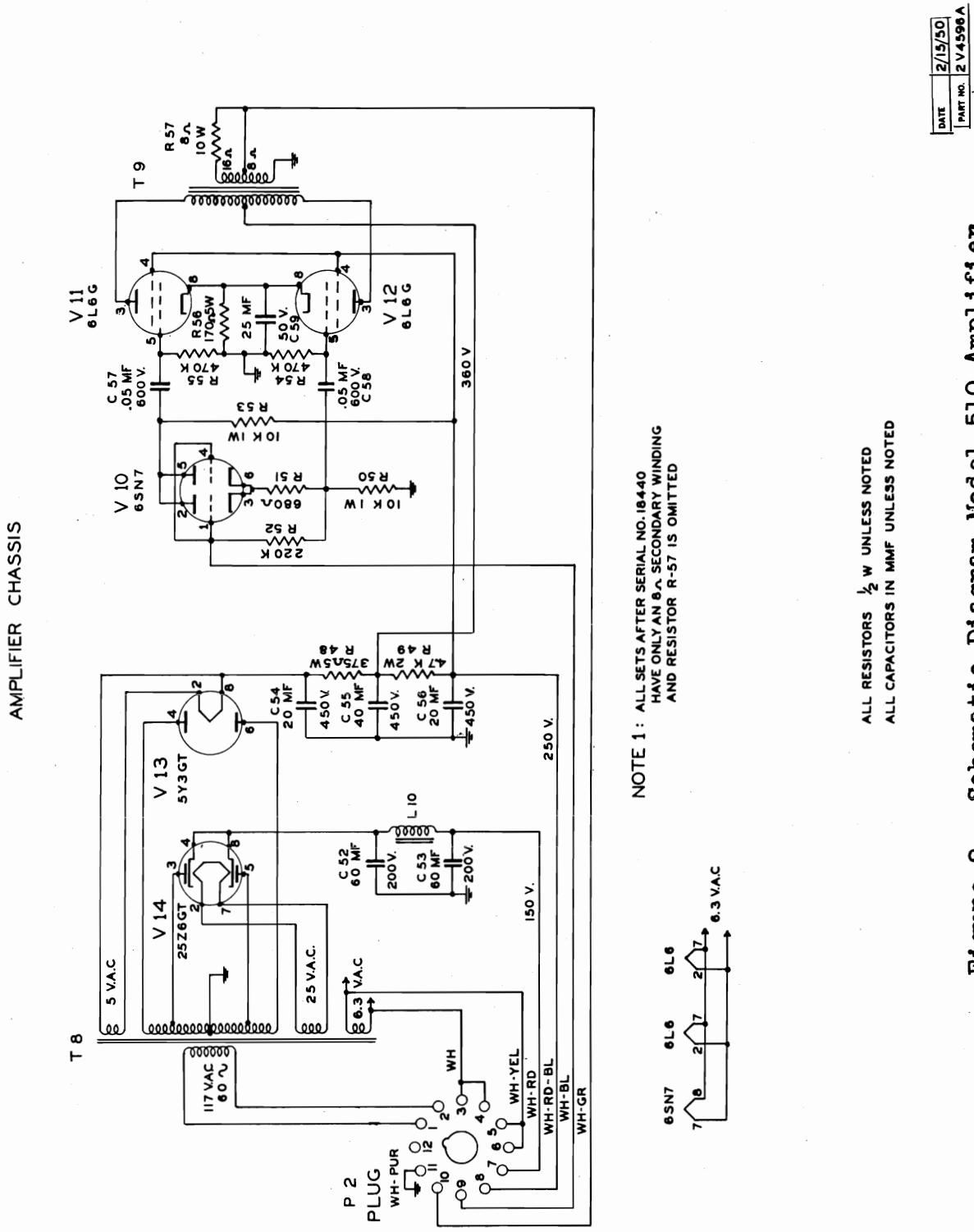

Figure 2 Schematic Diagram Model 510 Amplifier

©John F. Rider

Compliments of www.nucow.com

MODELS 510; 510K,
Kenilworth; 510S,
Sheffield

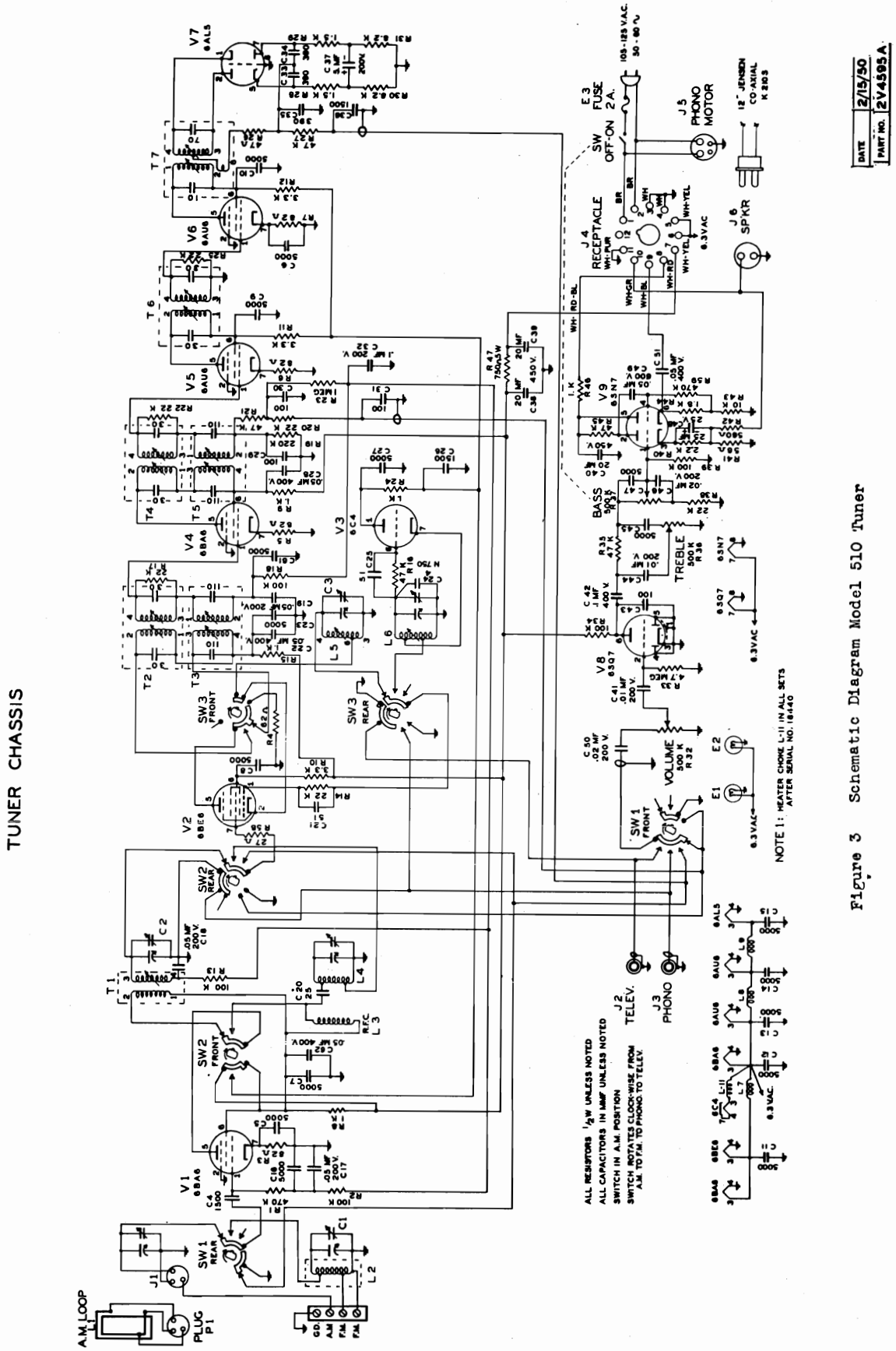

Figure 3 Schematic Diagram Model 510 Tuner

©John F. Rider

Compliments of www.nucow.com

Compliments of www.nucow.com

ALIGNMENT PROCEDURE

PRELIMINARY:

Output meter connection ---------- Across loudspeaker voice coil
Output meter reading to indicate 500 milliwatts (Standard Output) ---------- 1.26 volts
Dummy antenna to be in series with signal generator output ---------- See chart below
Connection of generator ground lead ---------- Floating ground
Generator modulation ---------- 30% 400 cycles
Position of Volume Control ---------- Fully clockwise

Position of Variable	Generator Frequency	Dummy Antenna	Generator Output Connection	Trimmers Adjusted	Trimmer Function	Approximate Sensitivity
Open	455 Kc	.05 uf	12SA7 Grid (Stator of C-1)	A1 A2	IF	4000 uv.
1400 Kc	1400 Kc		Antenna Lug with hank removed	**A3	Oscillator	500 uv.

** Since the antenna section of the variable has no trimmer, the rotor of the variable should be rocked back and forth on both sides of 1400 Kc while adjusting the oscillator trimmer for maximum output. This is to obtain the combination of rotor and trimmer setting to give perfect tracking of the two sections of the variable condenser and consequently give maximum output. Check sensitivity at 600 Kc. If weak, adjust antenna section plates for maximum output at 600 Kc. Tracking of the condenser at points other than 1400 Kc is accomplished by bending the outside plates on the variable condenser rotor, which are cut for this purpose. When bending plates to track the condenser at any given frequency, keep in mind the fact that this will effect the tracking at all frequencies below that point. A tuning wand is very helpful in checking the tracking of this condenser, to indicate whether more or less capacity is needed.

The alignment procedure should be repeated stage by stage in the original order for greatest accuracy. Always keep the output from the test oscillator at its lowest possible value to make the AVC action of the receiver ineffective.

SPECIFICATIONS

Power Output
Undistorted . . . . . 8 watt
Maximum . . . . . 2 watt
Speaker Voice Coil Impedance 3.2 ohms

Power Supply
105-125 Volts 30 Watts
Frequency Range
Broadcast . . . . . 540 - 1600 Kc

REPAIR PART LIST

Schematic Location	Part No.	Description
	N22934-1	Cabinet, Brown, (Cat. No. 1) . . . . .
	N22934-2	Cabinet, Ivory, (Cat. No. 2). . . . .
	N22990-1	Cloth, Grille, White, (Cat. No. 1) . . . . .
	N22990-2	Cloth, Grille, Maroon, (Cat. No. 2) . . . . .
L1	N22864	Coil, Antenna . . . . .
L2	N22865	Coil, Oscillator . . . . .
C1A, C1B	N22919	Condenser, Variable, 2 Gang . . . . .
C2A, C2B	N21042	Condenser, Trimmers, I.F. Trans. . . . .
C3, C6		Condenser, .05 mfd., 400 volt . . . . .
C4		Condenser, .05 mfd., 200 volt . . . . .
C5		Condenser, .01 mfd., 400 volt . . . . .
C7	N22876	Condenser, Electrolytic, 40-20 uf., 150 volt 20 uf., 25 volt . .
C8, C10		Condenser, .0001 mfd., 500 volt, mica . . . . .
C9, C11		Condenser, .002 mfd., 600 volt. . . . .
P	N20257-1	Cord, Power with Plug . . . . .
	N22974-1	Knob, Volume, Ivory, (Cat. No. 1) . . . . .
	N22975-1	Knob, Tuning, Ivory, (Cat. No. 1). . . . .
	N22974-2	Knob, Volume, Maroon, (Cat. No. 2) . . . . .

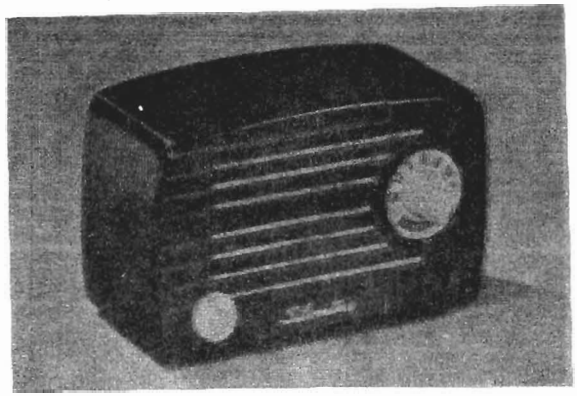

©John F. Rider

Compliments of www.nucow.com

MODELS 1, 2,
Ch. 132.878

Schematic Location	Part No.	Description
	N22975-2	Knob, Tuning, Maroon, (Cat. No. 2)
	N22978	Leaflet, Instruction
R1		Resistor, 330,000 ohms, 1/4 watt
R2		Resistor, 22,000 ohms, 1/4 watt
R3	N21630	Resistor, 2 Megohm, Volume Control & Switch
R4	N19177	Resistor, 47 ohm, 1 watt wire wound
R5		Resistor, 120 ohm, 1/4 watt
R6		Resistor, 2200 ohm, 1 watt
R7		Resistor, 15 ohm, 1/4 watt
R8		Resistor, 4.7 megohm, 1/4 watt
R9		Resistor, 15 megohm, 1/4 watt
R10		Resistor, 470,000 ohm, 1/4 watt
R11		Resistor, 1 megohm, 1/4 watt
SPK	N22875	Speaker, 4" P.M.
T1	N22863	Transformer, I.F.
T2	N22878	Transformer, Output
	N18136	Wire, Antenna

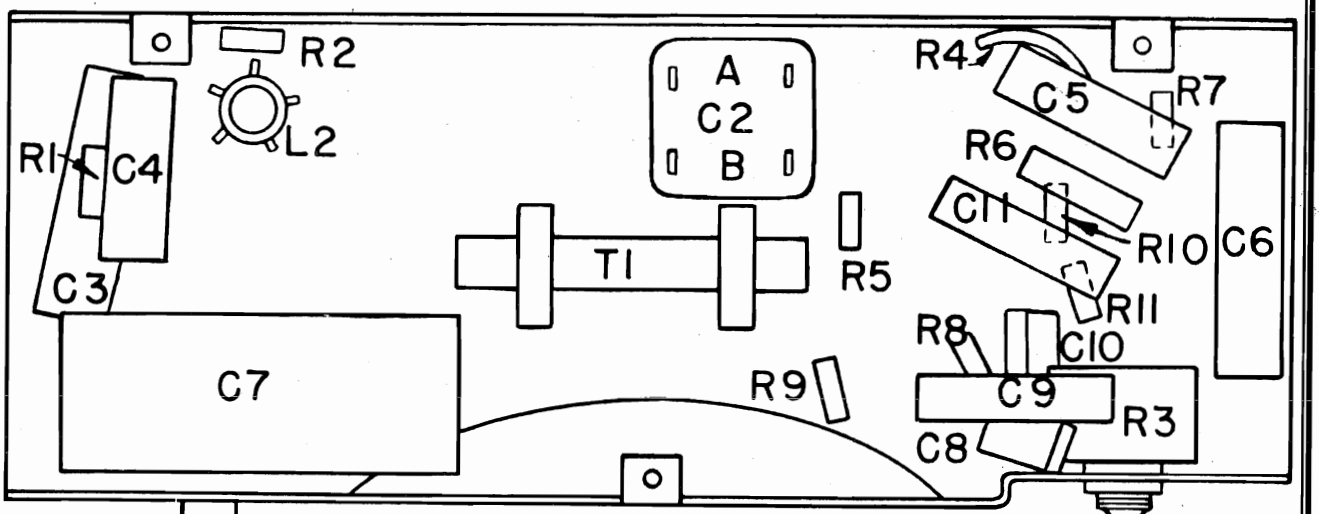

LOCATION OF PARTS UNDER CHASSIS

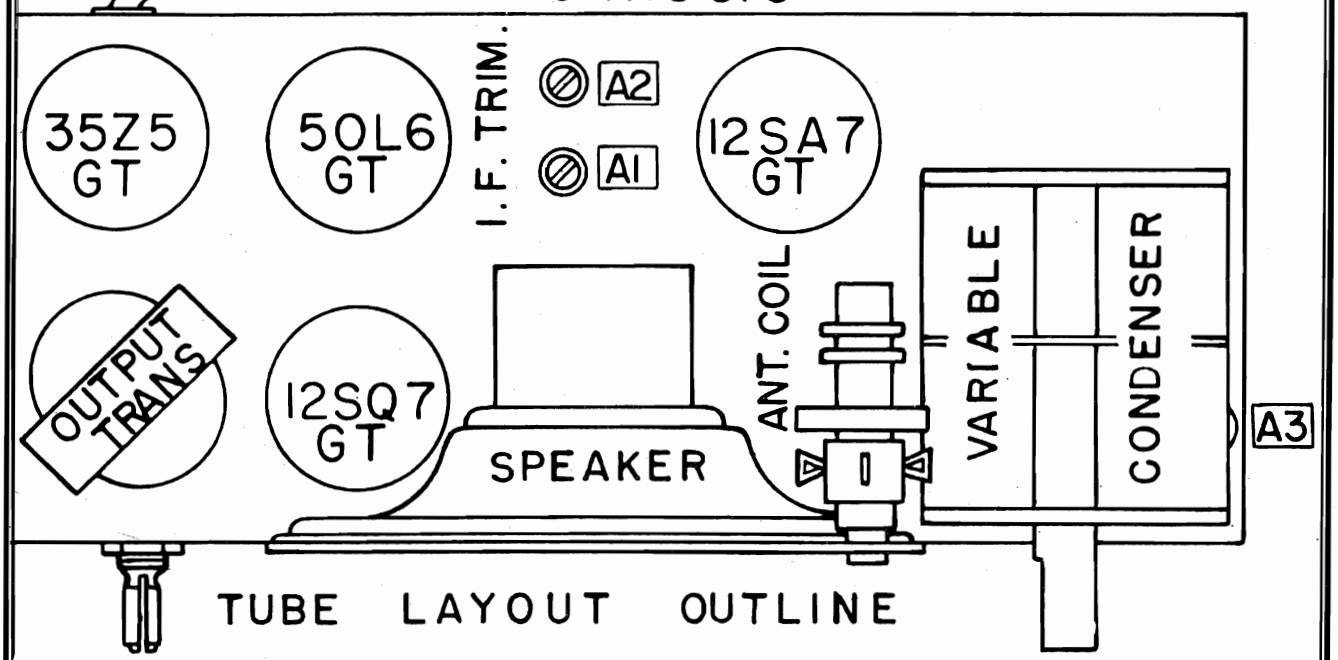

TUBE LAYOUT OUTLINE

©John F. Rider

Compliments of www.nucow.com

MODELS 1, 2,
Ch. 132.878

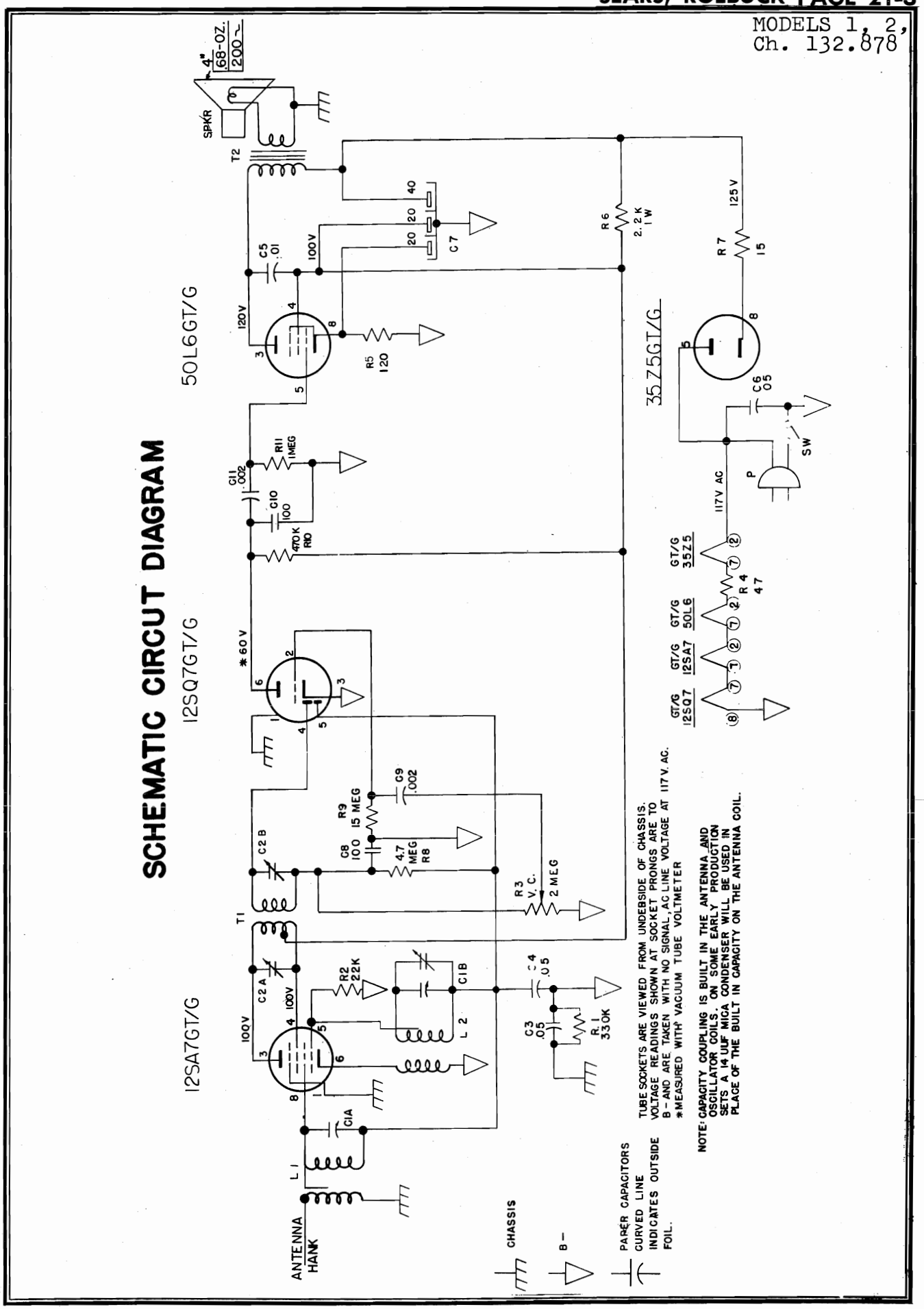

©John F. Rider

Compliments of www.nucow.com

MODEL 33, Ch.
548.363

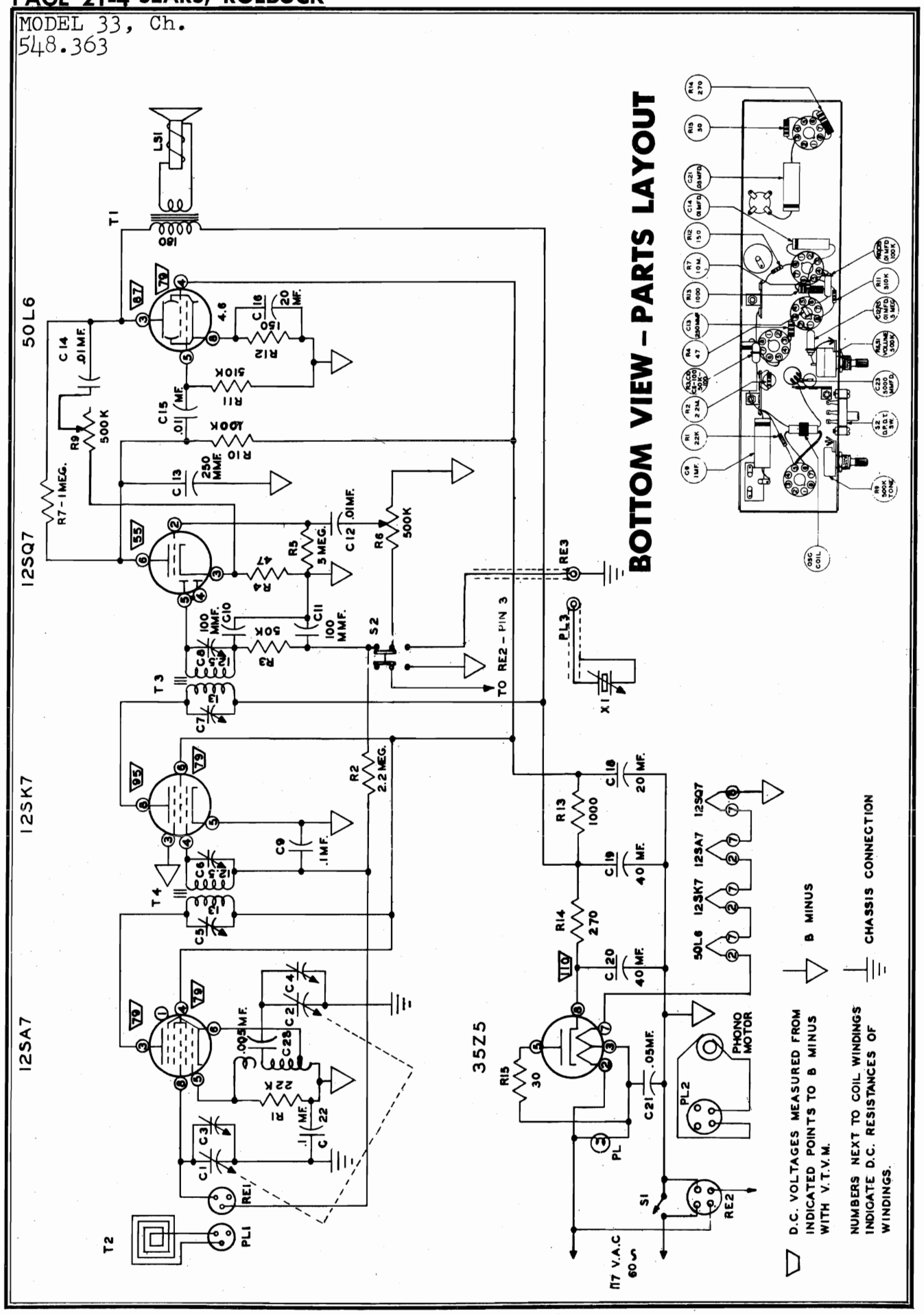

©John F. Rider

Compliments of www.nucow.com

MODEL 33,
Ch. 548.363

POWER SUPPLY . . . . . 117 V. A.C. 45 WATTS

PARTS LIST

SCHEMATIC LOCATION	PART NO.	DESCRIPTION
R1	517	Resistor 22,000 Ohm. 1/2 Watt
R2	615	Resistor 2.2 Meg Ohm. 1/2 Watt
R4	520	Resistor 47 Ohm. 1/2 Watt
R6	401	Control, Volume, 500,000 Ohm. with Switch
R7	516	Resistor, 1 Meg Ohm. 1/2 Watt
R9	408	Control, Tone, 500,000 Ohm.
R11	502	Resistor 510,000 Ohm. 1/2 Watt
R12	505	Resistor 150 Ohm. 1/2 Watt
R13	607	Resistor 1000 Ohm. 1 Watt
R14	622	Resistor 270 Ohm. 1 Watt
R15	534	Resistor 30 Ohm. 1/2 Watt
C1, C2, C3, C4	1004A	Tuning Gang and Trimmer Assembly
C5, C6, C7, C8		Trimmer Condensors in I. F. Cans
C9, C22	804	Capacitor .1 Mfd. 200 V.
C13	817	Capacitor 250 Mmfd. Ceramic
C14	802	Capacitor .01 Mfd. 400 V.
C16, C18	1010	Capacitor Filter 40, 40, 20 Mfd. 150 Volts
C19, C20		20 Mfd. 25 Volts
C21	803A	Capacitor .05 Mfd. 400 V.
C23	906	Capacitor 5000 Mmfd. Ceramic
R3, C10	811	Capristor 100 Mmfd. 50,000 Ohm.
C11		100 Mmfd. Dual Shunt
R5, C12	813	Capristor .01 Mfd. 5 Meg Ohm. Common Terminal
R10, C15	814A	Capristor .01 Mfd. 100,000 Ohm.
T2	1512A	Loop Antenna
T3, T4	1402	Transformers I. F. #118
S2	1892A	Switch, Radio-Phono
PL1	307A	Plug, Loop Antenna
PL2	307C	Plug, Motor A. C.
PL3	305	Plug, Pick up
RE1	106A	Receptacle, Loop Antenna
RE2	107A	Receptacle, A. C.
RE3	104	Receptacle, Pick up
X1	2530	Pick up, Ceramic Cartridge and Plastic Arm
LS1, T1	2607	Speaker, 5" P.M. with 2500 Ohm. Output Transformer
	2108A	Portable Carrying Case
	2411A	Knob, Volume
	2411B	Knob, Tuning
	2411C	Knob, Tone
	1736A	Dial Pointer
	2307	Dial Bezel
	1722B	Dial

TUBE LAYOUT

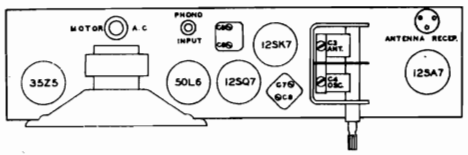

ALIGNMENT PROCEDURE

The following equipment is required for aligning: A signal generator which will provide an accurately calibrated signal at the indicated test frequencies; an output indicating meter; a non-metallic screwdriver.

Radiation Loop: 2-turn loop, 6 inches in diameter.

Conditions for Alignment:

Tone - Treble

Volume - Maximum

Selector Switch - "Radio" position

Test loop coupled loosely to receiver by spacing - receiver loop in same position as it will be with chassis in cabinet.

SIGNAL GENERATOR COUPLING	SIGNAL GENERATOR FREQUENCY	RADIO DIAL SETTING	OUTPUT METER	REMARKS	ADJUST FOR MAXIMUM OUTPUT
LOOP	455 KC	Low End of Band	Across Voice Coil	Short out osc. tuning gang section C-2; compress C-3	C-8, C-7, C-6, C-5
LOOP	1620 KC	High End of Band	"	Remove short across C-2	C-4
LOOP	1400 KC	Point of Maximum Output	"	Set pointer to 140 on dial	C-3
LOOP	600 KC	Point of Maximum Output	"	Knife C-1 plates for maximum output	
LOOP	1400 KC	1400	"	Recheck alignment.	C-3 if necessary

©John F. Rider

Compliments of www.nucow.com

MODELS 51, 53,
Ch. 132.887

Specifications

Power Supply
105-120 volts 60 cycle AC, 65 watts
Frequency Range
Broadcast - 1600 - 540 Kc

Power Output
Undistorted .8 watt
Maximum 1.5 watt
Speaker Voice Coil Impedance 3.2 ohms

SCHEMATIC LOCATION	PART NUMBER	DESCRIPTION
L1	N23159	Antenna Loop Assembly
	N22953	Bracket, Antenna Loop Mtg.
	N23207	Bracket, Var. Con. Mtg.
	N23427	Bracket, Dial Scale Mtg.
	N19361	Clip, Hairpin
L2	N23163	Coil, R.F.
L3	*N23751	Coil, Oscillator
C1A,C1B,C1C	*N23743	Condenser, Variable, 3 Gang
C2,C5,C13		Condenser, .05 mfd., 400 volt
C3		Condenser, .05 mfd., 200 volt
C4		Condenser, .00005 mfd., 500 volt, mica
C6,C8		Condenser, .0002 mfd., 350 volt, Ceramic
C7,C9		Condenser, .01 mfd., 400 volt
C11		Condenser, .02 mfd., 400 volt
C12A,C12B	N22111	Condenser, Electrolytic, 50-50 mfd., 150 volt
	N19132	Cord, Dial Drive
P	N20138-15	Cord, Power with Plug
	N23484	Cover, Rear Cabinet
	N23573	Cover, Record Changer, Bottom
	N23402	Escutcheon, Dial with Crystal
	N23450-1C	Knob, On-Off-Volume
	N23450-1B	Knob, Radio-Phono
	N23450-1A	Knob, Tuning
		Lamp, Dial, Mazda, No. 47
	N23534	Leaflet, Instruction
	N22956-1	Pointer, Dial
R1,R9		Resistor, 330,000 ohms, ¼ watt
R2		Resistor, 1000 ohms, ¼ watt
R3		Resistor, 22,000 ohms, ¼ watt
R4		Resistor, 6.8 megohm, ¼ watt
R5		Resistor, 1 megohm, ¼ watt
R6		Resistor, 15 ohm, ¼ watt
R7	N22963	Resistor, Volume Control & Switch, 500,000 ohms
R8		Resistor, 3.3 megohm, ¼ watt
R10		Resistor, 470,000 ohms, ¼ watt
R11,R13		Resistor, 150 ohm, ¼ watt
R12		Resistor, 1200 ohms, 2 watt
	N23430	Scale, Dial
	N22957	Shaft, Tuning
	N23537-1	Socket, Dial-lite with leads
	N19551	Socket, Phono Motor
	N19552	Socket, Phono input
SPKR	N23406	Speaker, 6" P.M.
	N19133	Spring, Dial Cord
T1	N23161	Transformer, 1st I.F.
T2	N23162	Transformer, 2nd I.F.
T3	N23407	Transformer, Output
	N22763	Weight, Cabinet

*On some of the first sets manufactured variable condenser N23155 (with a single spaced oscillator section) and oscillator coil N23160 were used. If either the oscillator coil or the variable condenser is replaced with the part listed here, the other part should also be replaced for correct tracking. N23155 and N23160 should be used together, and N23743 and N23751 should be used together.

TECHNICAL INFORMATION

Tuning range 540 Kc. to 1600 Kc. Intermediate frequency - 455 Kc. I-f and r-f measurements made at .5 watt output - approximately 1.26 volts on a rectifier type voltmeter connected across the voice coil.

Approximate inputs for a .5 watt output: I-f 200 uv. R-f with standard loop: at 600 Kc. 500 uv/m; at 1000 Kc. 400 uv/m; at 1400 Kc. 400 uv/m. R-f at external antenna connection: at 600 Kc. 250 uv; at 1000 Kc. 200 uv; at 1400 Kc. 200 uv.

ALIGNMENT DATA

With variable condenser closed, set the pointer horizontally to the left.

Position of Variable	Generator Frequency	Dummy Ant.	Generator Connection (High)	Generator Connection (Low)	Adjust Trimmers (in order shown)	Trimmer Function
Open	455 Kc	.05 mfd.	Mixer Grid	Float.Gnd.	A1,A2,A3,A4	I.F.
1400 Kc	1400 Kc	50 mmfd.	Ext.Ant.Conn.	Float.Gnd.	A5,A6,A7	Osc.R.F.Ant.
600 Kc	600 Kc	50 mmfd.	Ext.Ant.Conn.	Float.Gnd.	Check Point	

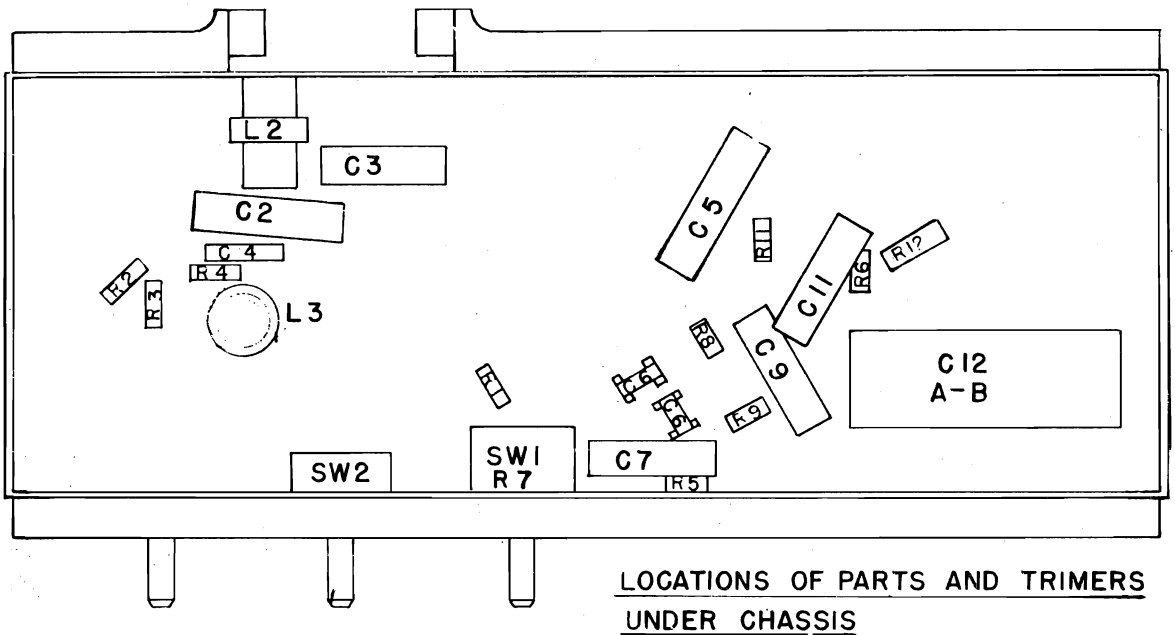

LOCATIONS OF PARTS AND TRIMERS UNDER CHASSIS

©John F. Rider

Compliments of www.nucow.com

MODELS 51, 53,
Ch. 132.887

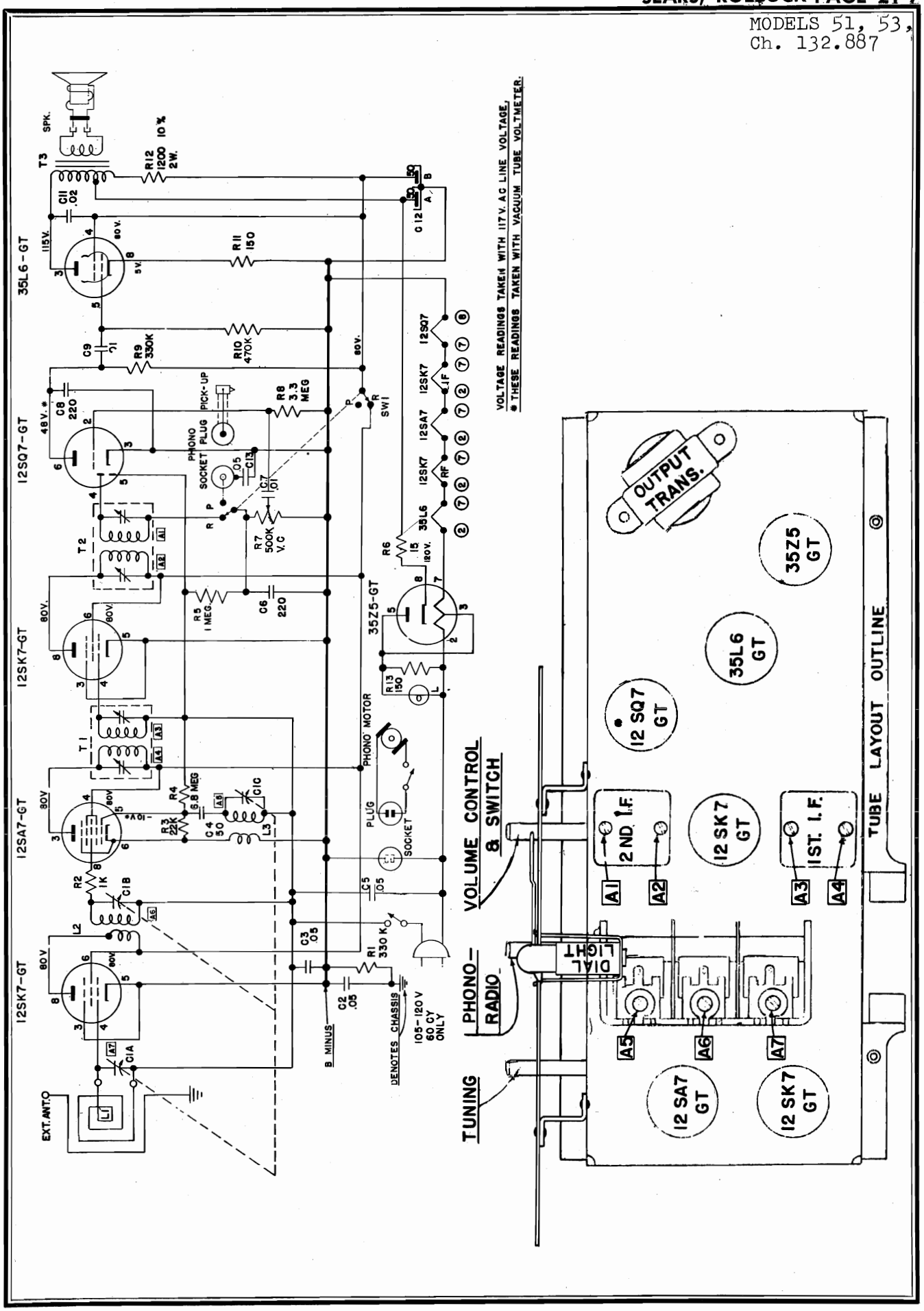

©John F. Rider

Compliments of www.nucow.com

MODELS 54, 56,
Ch. 132.888

Specifications

Power Supply
105-120 volt 60 cycle AC, 65 watts

Frequency Range
Broadcast - 1600 - 540 Kc
FM - 108 - 88 Mc

Power Output
Undistorted 1.5
Maximum 2.5

Speaker Voice Coil Impedance 3.2

SCHEMATIC LOCATION	PART NUMBER	DESCRIPTION
L3	N22586	Antenna Loop Ass'y.
L1	N22648-1	Choke, High Frequency, 1.5 uh
L2	N21445-1	Choke, High Frequency, 7.5 uh
L7	N22597-1	Choke, High Frequency, 3 uh
L8	N21673	Choke, R.F., Iron core, 14 uh
L4	N22593	Coil, R.F., FM
L5	N22594	Coil, Oscillator, FM
L6	N22597-1	Coil, Oscillator, AM
C1,C2,C3,C4	N22962	Condenser, Variable
C4A	N22724	Condenser, Osc. Temp. Cor. 5-25 uuf
C5,C14		Condenser, Ceramic, 47 uuf, 350 v.
C6,C18,C19, C21,C23,C25		Condenser, Disc, 5K uuf, 350 v.
C7,C20,C24		Condenser, Disc, 10 K uuf,350 v.
C8,C26,C28, C30,C31		Condenser, Ceramic, 100 uuf, 350 v.
C9,C12,C13, C16,C17		Condenser, Ceramic, 1K uuf, 350 v.
C10		Condenser, Ceramic, 1.5 uuf, 350 v. Gimmick
C11		Condenser, Ceramic, 50 uuf, 500 v. N750
C15,C34		Condenser, F.T., .01 uf, 400 v.
C22		Condenser, Ceramic, 15 uuf, 350 v.
C27		Condenser, F.T., .003 uf, 600 v.
C29	N22659	Condenser, Electrolytic, 4 uf, 25 v.
C32,C35A,C35B		Condenser, Ceramic, 220 uuf, 350 v.
C35C	N22806	Condenser, Electrolytic, 40-20-20 uf, 250 v.
C36,C38		Condenser, F.T., .02 uf, 400 v.
C37	N22602	Condenser, Electrolytic, 10 uf, 25 v.
C39		Condenser, Molded, .01 uf, 400 v.
C40		Condenser, F.T., .05 uf, 200 v.
R24,SW-2	N22963	Control, Volume & Switch, 500K ohms
	N19132	Cord, Dial Drive
P	N20138-14	Cord, Power with Plug
	N23484	Cover, Rear Cabinet
	N23402	Escutcheon, Dial with Crystal
	N23450-1C	Knob, On-Off Volume
	N23450-1D	Knob, AM-FM-Phono
	N23450-1A	Knob, Tuning
		Lamp, Dial, Mazda No. 47
	N23524	Leaflet, Instruction
	N22956-1	Pointer, Dial
R1,R11,R15		Resistor, 68 ohms, 1/4 watt
R2		Resistor, 27K ohms, 1 watt
R3		Resistor, 47 ohms, 1/4 watt
R4,R6		Resistor, 22K ohms, 1/4 watt
R5		Resistor, 2200 ohms, 1/4 watt
R7,R8,R13, R17,R30		Resistor, 1K ohms, 1/4 watt
R9		Resistor, 8.2K ohms, 1 watt
R10,R20		Resistor, 1 megohm, 1/4 watt
R12		Resistor, 10K ohms, 1 watt
R14,R22		Resistor, 100K ohms, 1/4 watt
R16		Resistor, 3.3K ohms, 1 watt
R18		Resistor, 180 ohms, 1/4 watt
R19		Resistor, 39K ohms, 1/4 watt
R21		Resistor, 220K ohms, 1/4 watt
R23		Resistor, 15K ohms, 1/4 watt
R25		Resistor, 10 megohms, 1/4 watt
R26		Resistor, 330K ohms, 1/4 watt
R27A,R27B	N22624	Resistor, 2 x 500 ohms, 5 watts
R28		Resistor, 470 K ohms, 1/4 watt
R29		Resistor, 270 ohms, 1 watt
	N23429	Scale, Dial
	N22957	Shaft, Tuning
	N23537-1	Socket, Dial-Lite with Leads
	N19551	Socket, AC Phono Motor
	N19552	Socket, Phono Input
Spk.	N23406	Speaker, 6" P.M.
	N19133	Spring, Dial Cord
PS.-2	N22334-1	Suppressor Ass'y. Parasitic-AM
PS.-1	N22335-1	Suppressor Ass'y. Parasitic-FM
SW-1	N23485	Switch, Band, FM-AM-Phono
T2,T4	N22352-1	Transformer, I.F., AM, 445 Kc.
T1	N22590	Transformer, 1st I.F., FM, 10.7 Mc.
T3	N22967	Transformer, 2nd I.F., FM, 10.7 Mc.
T6	N23669	Transformer, Output
T7	N22959	Transformer, Power
T5	N22592	Transformer, Ratio Detector
	N22763	Weight, Cabinet

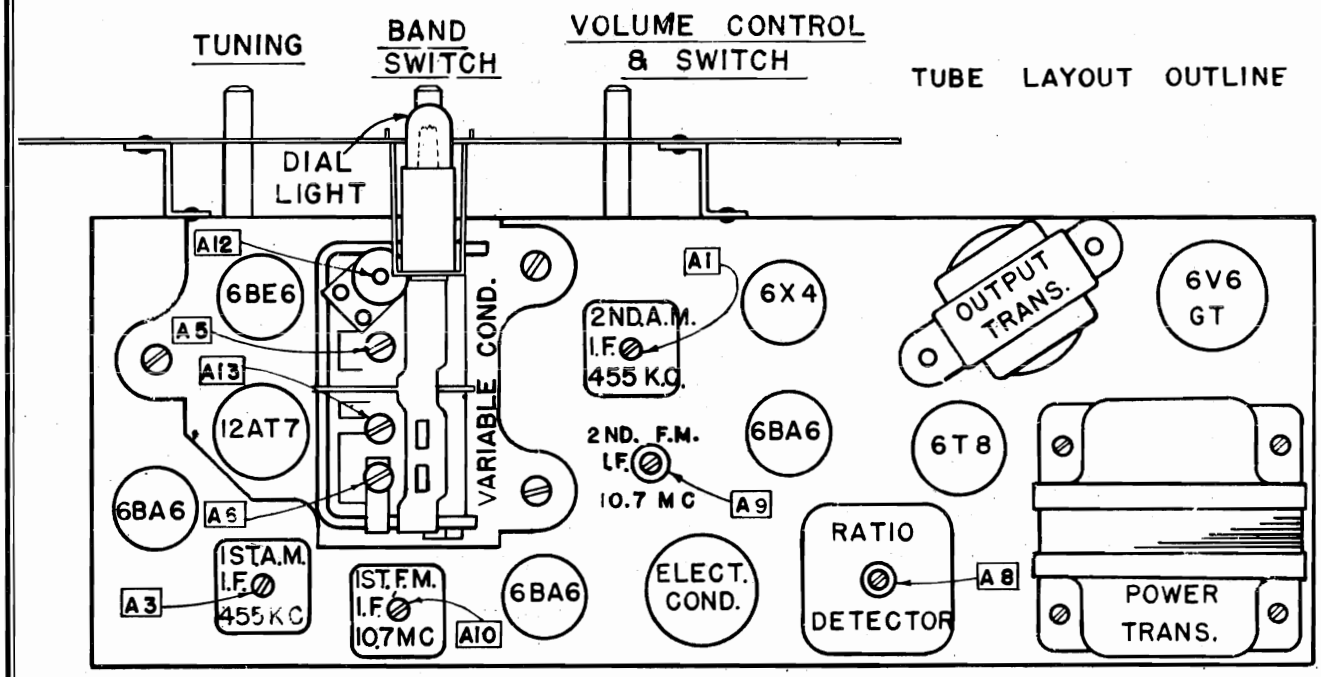

TECHNICAL INFORMATION

AM Tuning range—540 Kc. to 1600 Kc. Immediate Frequency—455 Kc. I.F. and R.F. measurements made at 500 milliwatts output—approximately 1.27 volts on a receiver type voltmeter connected across speaker voice coil. Approximate input for 500 MW output: I.F. 300 uv; R.F. with standard loop: at 00 Kc. 1200 uv/m; at 1000 Kc. uv/m; at 1400 Kc. 800 uv/m.

FM Tuning range—88 megacycles to 108 megacycles. Intermediate frequency 10.7 megacycles. I.F. and R.F. measurements made at 500 milliwatts output—approximately 1.27 volts on a recitfier type voltmeter connected across speaker voice coil. Approximate input for 500 MW output: I.F. 300 uv; R.F. "Absolute Measurements": 91 megacycles 125 uv; 105 megacycles, 100 uv.

ALIGNMENT PROCEDURE

Output meter connection_____Across speaker voice coil.
Output meter reading to indicate 500 MW_____1.27 volts.
Generator Modulation_____30%, 400 cycles
Position of volume control_____Fully clockwise.

Set dial pointer_____Horizontal, variable condsenser closed.
Set band switch_____
_____To left for AM alignment, center for FM alignment

©John F. Rider

Compliments of www.nucow.com

MODELS 54, 56,
Ch. 132.888

FM ALIGNMENT

Detector and I.F. alignment using Signal Generator and Oscilloscope.

1. Connect FM Generator, High side, to grid (pin 1) of 6BA6 2nd I.F. tube through .005 mfd. dummy.
2. Set generator frequency to 10.7 Mc. modulated either 60 cycles or 400 cycles, 250 Kc sweep (125 Kc. deviation).
3. Connect vertical input of scope across volume control of receiver (grounded terminal to chassis, ungrounded terminal to high side of control).
4. Set scope switch for internal synchronization and set horizontal oscillator to 2X frequency of modulating voltage of generator. (120 or 800 cycles)
5. Turn variable condenser fully open, and band switch to right (FM).
6. Adjust frequency vernier of horizontal oscillator on scope until the pattern becomes stationary.
7. Adjust ratio detector primary slug No. A7 for maximum vertical sweep of the scope pattern.
8. Adjust ratio detector secondary slug No. A8 to center the cross over point of the pattern. Pattern should look like Fig. 1 with the same amount of curve on both ends, and the cross over point in the center.
9. Connect generator, high side, to center antenna screw terminal on rear of chassis.
10. Adjust I.F. slugs A9, A10 and All for the greatest vertical sweep of the pattern, consistent with linearity. If the I.F. slugs are adjusted for maximum sweep of the pattern, the pattern may become non-linear. Therefore, adjustment should be made for the greatest sweep which can be obtained and still have all four ends of the "X" pattern similar in size and shape.
11. Check the alignment of the I.F. and detector circuits by varying the signal generator frequency above and below the center frequency of 10.7 Mc. If the receiver is perfectly aligned, two smaller "X" patterns of similar size and shape will result, one on either side of the center frequency. See Figure 2.

X PATTERN
CENTER FREQUENCY

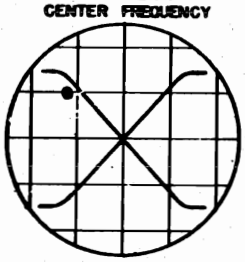

FIG 1

SMALL X PATTERN
ABOVE AND BELOW
CENTER FREQUENCY

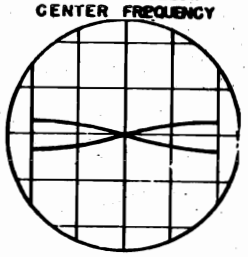

FIG. 2

Position of Variable	Generator Frequency	Dummy Ant.	RF Generator Connection High Side	Generator Connection Ground Lead	Adjust Trimmers In Order Shown	Trimmer Function
Fully open	108.5 Mc.	*300 ohm	Ant. (FM) Terminal	Ground (G) Terminal	A12	Oscillator
Fully Closed	87.5 Mc.	*300 ohm	Ant. (FM) Terminal	Ground (G) Terminal	Check Point	Oscillator
105 Mc.	105 Mc.	*300 ohm	Ant. (FM) Terminal	Ground (G) Terminal	A13	R.F.
91 Mc.	91 Mc.	*300 ohm	Ant. (FM) Terminal	Ground (G) Terminal	Check Point	R.F.

For R.F. alignment use FM generator signal modulated with 400 cycles 45 Kc. sweep (22.5 Kc.) deviation).
*The 300 ohm dummy should be made up to two 150 ohm resistors, one placed in each lead at the receiver antenna terminals.

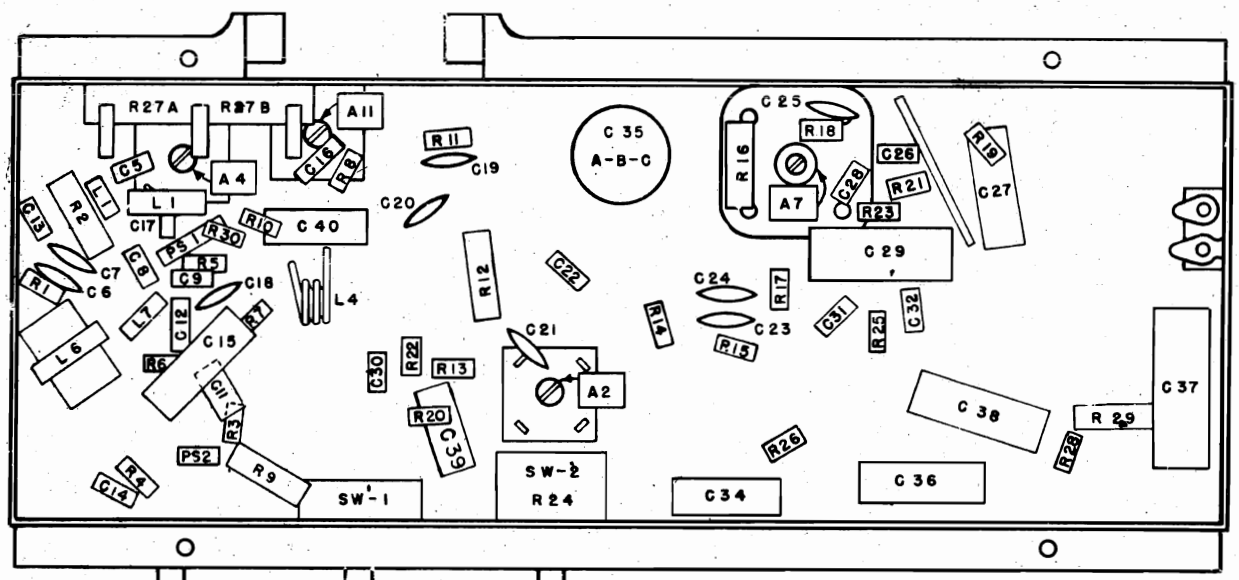

LOCATIONS OF PARTS AND TRIMERS
UNDER CHASSIS

©John F. Rider

Compliments of www.nucow.com

AM ALIGNMENT

Position of Variable	Generator Frequency	Dummy Ant.	Generator Connection (high)	Generator Connection Ground Lead	Adjust Trimmers In Order Shown For Max. Output	Trimmer Function
Open	455 Kc	.05 mfd.	Mixer Grid	Chassis	A1, A2, A3, A4,	I. F.
Open	1650 Kc		*Test Loop	Test Loop	A5	Oscillator
1400 Kc	1400 Kc		*Test Loop	Test Loop	A6	Antenna
**600 Kc	600 Kc		*Test Loop	Test Loop	Check Point	Antenna

* Connect generator lead to Standard Hazeltine Test Loop, Model 1150, placed two feet from the set loop, or three turns of wire about six inches in diameter, placed about one foot from the set loop. Or the generator can be connected with the high side lead to the AM antenna screw terminal and the ground lead to the chassis.

**With a generator signal of 600 Kc, tune the set to the point where maximum output is obtained, which should be approximately 600 Kc on the dial. Adjust antenna section plates of variable for maximum output.

The alignment procedure should be repeated in the original order for greatest accuracy

Always keep the output from the signal generator at its lowest possible value to make the A. V. C. action of the receiver ineffective.

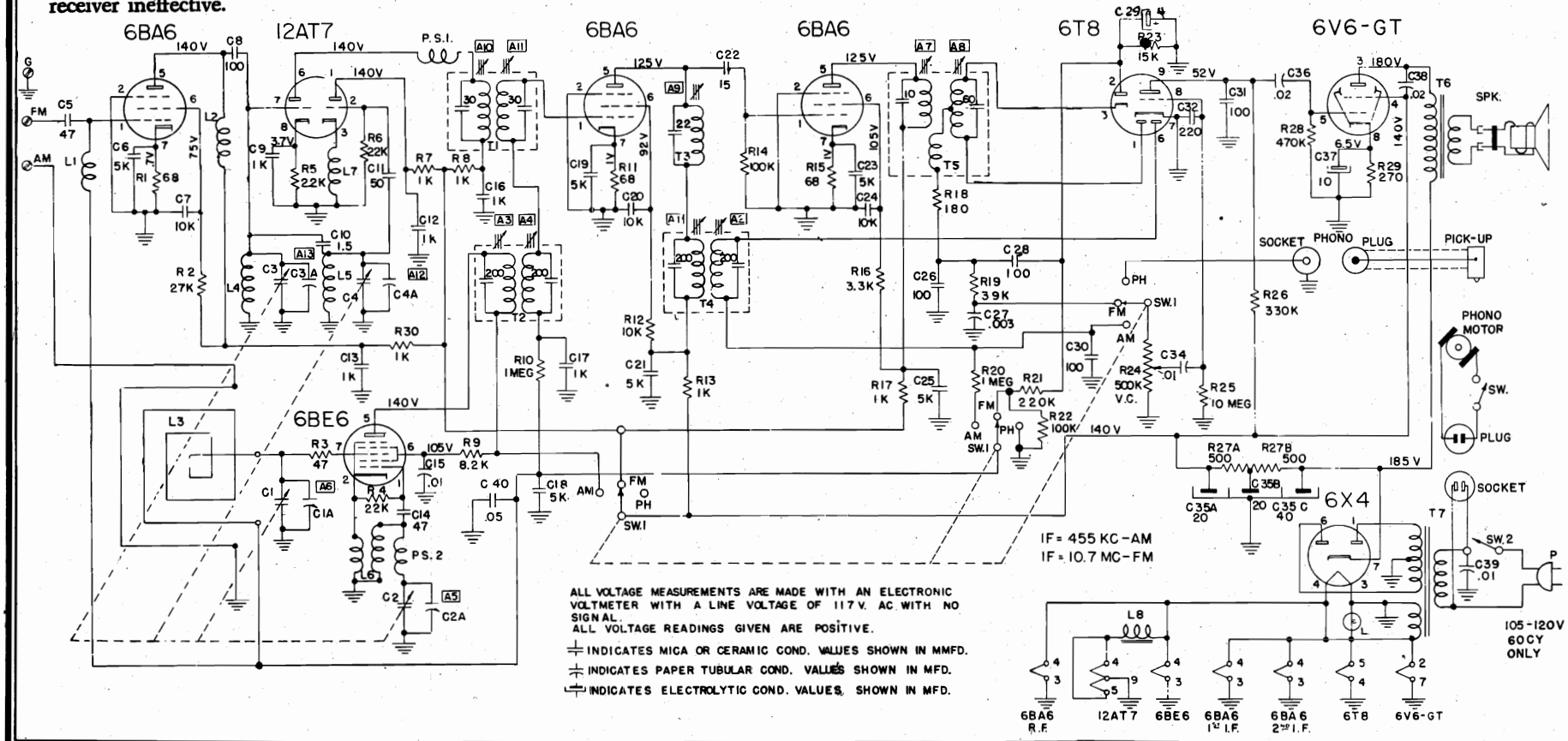

©John F. Rider

Compliments of www.nucow.com

MODEL 210,
Ch. 132.880

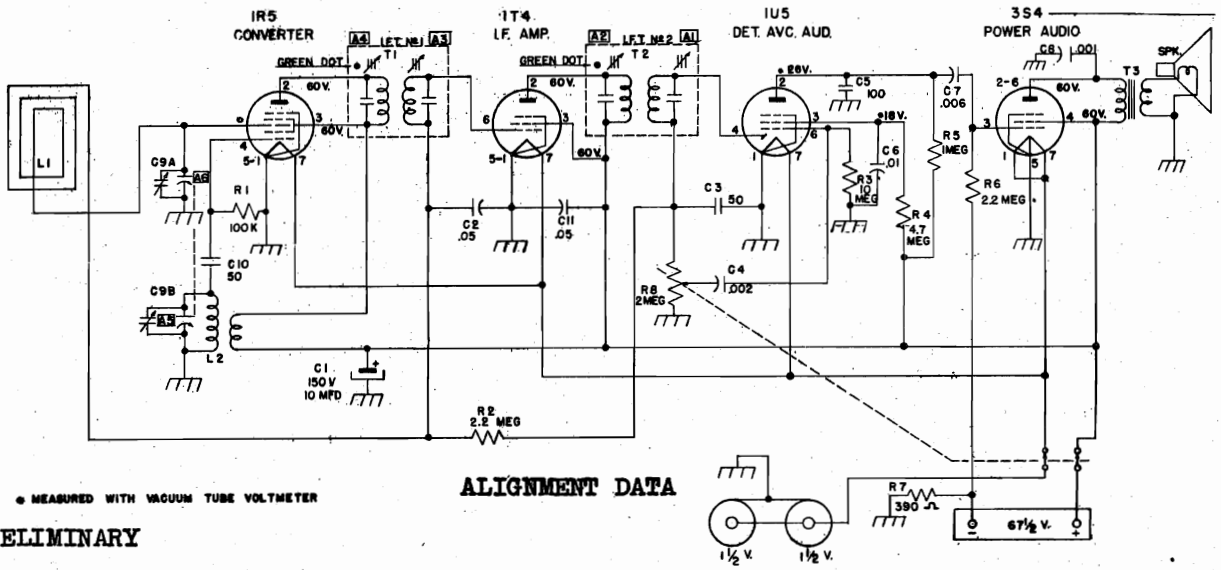

● MEASURED WITH VACUUM TUBE VOLTMETER

ALIGNMENT DATA

PRELIMINARY

Output meter reading to indicate .05 watt across voice coil . . . . . 0.4 V
Generator ground lead connected . . . . . to metal chassis
Generator modulation . . . . . 30%, 400 cycles
Position of Volume control . . . . . fully on

Position of Variable	Generator Frequency	Dummy Antenna	Generator Connections	Adjust Trimmers (In order shown)	Trimmer Function
Open	455 KC	.05 MFD	Mixer Grid	A1,A2,A3,A4	I.F.
Open	1650 KC		Test Loop	A5	Osc.
1400 KC	1400 KC		Test Loop	A6	Ant.
600 KC	600 KC		Test Loop	Check Point	

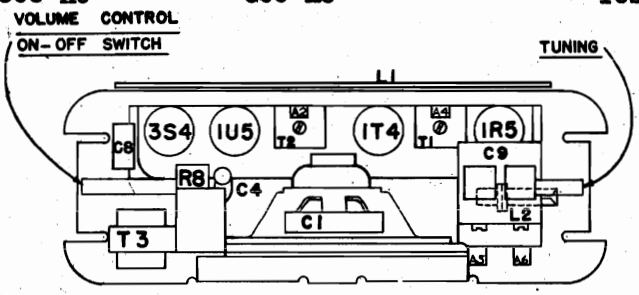

TUBE LAYOUT

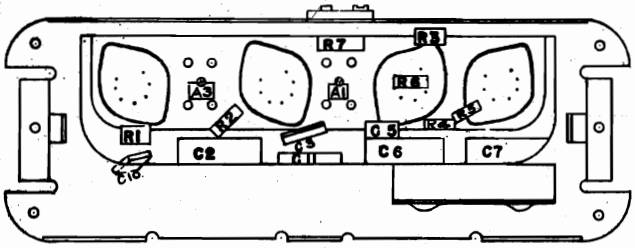

LOCATIONS OF PARTS UNDER CHASSIS

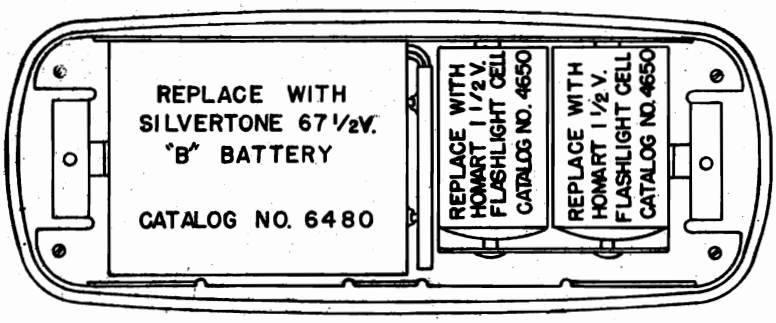

Specifications

Power Supply - 1½ V. A Battery
67½ V. B Battery

Frequency Range
Broadcast - 540 - 1600 KC
FM

Power Output
Undistorted 65 mw
Maximum 150 mw

Speaker Voice Coil Impedance 3.2 ohms

Schematic Location	Part No.	Description
C7		Condenser, .006 mfd., 600 volt
C8		Condenser, .001 mfd., 600 volt
C9A,B	N22966	Condenser, Variable
	N23137	Insulator, Battery Clip
	N23181	Knob, Tuning
	N23182	Knob, On-Off-Volume
	N23187	Leaflet, Instruction
R1		Resistor, 100,000 ohms, ¼ watt
R2,R6		Resistor, 2.2 megohm, ¼ watt
R3		Resistor, 10 megohm, ¼ watt
R4		Resistor, 4.7 megohm, ½ watt
R5		Resistor, 1 megohm, ¼ watt
R7		Resistor, 390 ohm, ¼ watt
R8	N23138	Resistor, Volume Control & Switch 2 megohm
SPK	N22972	Speaker, 4" P.M.
T1,T2	N21797-1	Transformer, I.F.
T3	N23140	Transformer, Output
L1	N23141	Antenna Loop Assembly
	N23675	Cabinet Assembly
	N23179	Cabinet, Green Plastic
	N23170-1	Cloth, Grille
	N23260	Handle, Green Plastic
	N21842-1	Cable, "B" Battery & Terminal Strip
	N23136	Clip, "A" Battery
	N23139	Coil, Oscillator Assy.
C1	N21811	Condenser, Electrolytic, 10 mfd., 150 volt
C2,C11		Condenser, .05 mfd., 200 volt
C3,C10		Condenser, .00005 mfd., 500 volt, mica
C4		Condenser, .002 mfd., 600 volt
C5		Condenser, .0001 mfd., 500 volt, mica
C6		Condenser, .01 mfd., 200 volt

©John F. Rider

Compliments of www.nucow.com

MODEL 220,
Ch. 528.173

SPECIFICATIONS

Power Supply: ..... 117 Volts, DC or 50-60 Cycles AC, 11 Watts or Catalog No. 6407 Battery Pack.

Power Output:
Undistorted ..... 0.15 Watt
Maximum ..... 0.30 Watt

Frequency Range:
Broadcast ..... 540-1625 KC

Schematic Location	Part Number	DESCRIPTION
		CHASSIS PARTS
	T72-50	Bushing, pointer drive
	T72-51	Bushing, tuning shaft
	T84-437	Cable assembly, battery
C1, C2	T19-210	Capacitor, variable (2 gang)
C3, C4, C5	T18-296	Capacitor, electrolytic
C6	T15-229	Capacitor, 47 mmfd., ceramic
C7, C14	T16-153	Capacitor, .005 mfd., 600 v.
C8, C15	T16-152	Capacitor, .05 mfd. 200 v.
C9, C10, C11, C12, C13	T17-103	Capacitor, ceramic unit
C16	T16-156	Capacitor, .01 mfd. 400 v.
C17	T16-157	Capacitor, .1 mfd. 200 v.
C18, C19	T16-197	Capacitor, .05 mfd. 400 v.
	T83-421	Clip, I.F. transformer mounting
L2	T10-554	Coil, oscillator
R5, S1	T24-188	Control, volume and switch
	T23-162	Cord, power, AC/DC
	T21-158	Cover, bottom
	T47-108	Grommet, variable condenser
	T76-13	Insulator, electrolytic
L1	T82-67	Loop, antenna
	T58-80	Pointer
	T31-160	Plate, dial backing
	T83-642	Rectifier, selenium
R1	T60-727	Resistor, 100,000 ohm, ½ w.
R2, R6	T60-728	Resistor, 10 meg., ½ w.
R3, R8	T60-726	Resistor, 2.2 meg., ½ w.
R4	T60-730	Resistor, 47,000 ohm, ½ w.
R7	T60-669	Resistor, 4.7 meg., ½ w.
R9	T60-770	Resistor, 470 ohm, ½ w. 10%
R10	T60-708	Resistor, 680 ohm, ½ w. 10%
R11	T60-760	Resistor, 10,000 ohm, ½ w. 10%
R12	T60-753	Resistor, 220 ohm, ½ w. 10%
R13	T60-668	Resistor, 1 meg., ½ w.
R14	T60-756	Resistor, 1200 ohm, ½ w., 10%
R15	T60-725	Resistor, 160 ohm, 3 w. 5%
R16	T60-675	Resistor, 1000 ohm, ½ w.
R17	T60-757	Resistor, 2000 ohm, 10 w. 5%
	T83-661	Retainer, tube shield
	T75-81	Shaft, pointer drive
	T75-82	Shaft, condenser drive
	T71-42	Shield, tube
	T68-39	Socket, miniature wafer
	T77-151	Spacer, variable condenser
	T70-103	Spring, pointer drive
	T70-135	Spring, condenser drive
	T79-381	Speaker, 4" x 6" P.M.
S2	T69-186	Switch, Batt./AC/DC
T1, T2	T10-508	Transformer, I.F.
T3	T80-245	Transformer, output
	T86-51	Washer, "C", pointer shaft
	T86-112	Washer, "C", tuning shaft
	T86-136	Washer, compression, tuning shaft
		CABINET PARTS
	T42-467	Cabinet (front case only, less escutcheon and hardware)
	T22-155	Clip (cabinet)
	T64-9	Clip (back cover)
	T42-467	Cover, back (less hardware)
	T53-3	Cover, handle
	T49-4	End caps, handle
	T40-160	Escutcheon
	T52-308	Knob
	T97-112	Screw, self-tapping
	T70-163	Spring, hinge
	T53-2	Strap, handle

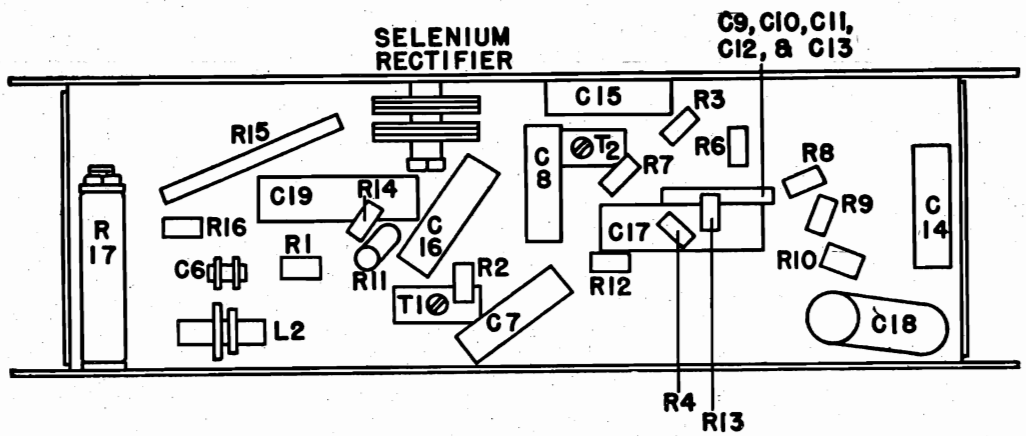

LOCATION OF PARTS UNDER CHASSIS

©John F. Rider

Compliments of www.nucow.com

MODEL 220,
Ch. 528.173

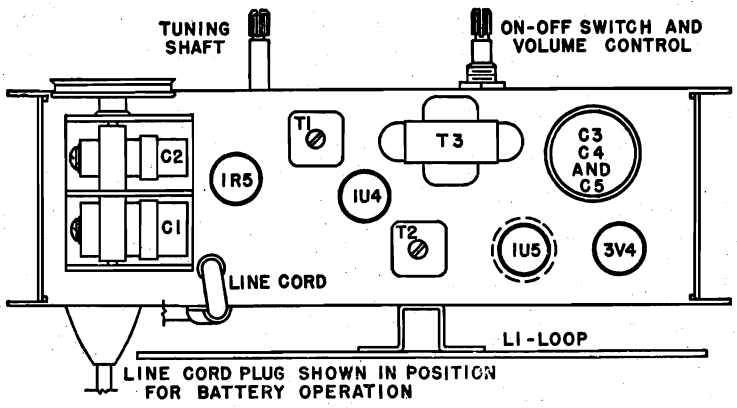

LOCATION OF PARTS ON TOP OF CHASSIS

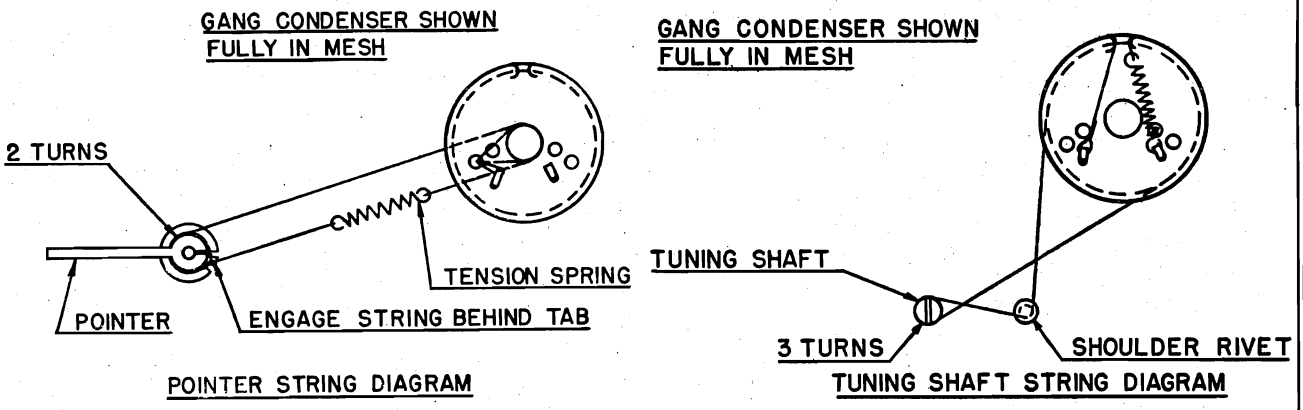

STRING AND POINTER HOOKUP

ALIGNMENT PROCEDURE

Output meter reading to indicate 0.05 watt across voice coil ..... 0.4 v.

Generator ground lead connected ..... To B- through 0.1 mfd. capacitor

Generator modulation ..... 30%, 400 cycles

Position of volume control ..... Fully on

Position of pointer with tuner fully closed ..... Pointer should be horizontal, pointing to left (9 o'clock).

Position of Tuner	Generator Freq.	Dummy Antenna	Generator Connection	Adjustments (in order shown)	Function	Max. Microvolts Input to produce .05 w. output
Min. Cap.	455 kc	0.1 mfd.	Pin #6 of 1U4 I-F Amp.	T2 (top and bottom)	I.F.	5000
Min. Cap.	455 kc	0.1 mfd.	Pin #6 of 1R5 Conv.	T1 (top and bottom)	I.F.	250
Min. Cap.	1625 kc	0.1 mfd.	Stator ant. tuner	C2	Osc.	
1400 kc	1400 kc		Hazeltine Test Loop	C1	Loop	100

ALIGNMENT NOTES:

1. It is recommended that this set be connected to an isolation transformer when aligning on AC.
2. The alignment must be done in the order given above.
3. While making the above adjustments, keep the volume control set for maximum output and the signal generator output attenuated to avoid AVC action.

©John F. Rider

Compliments of www.nucow.com

MODEL 220,
Ch. 528.173

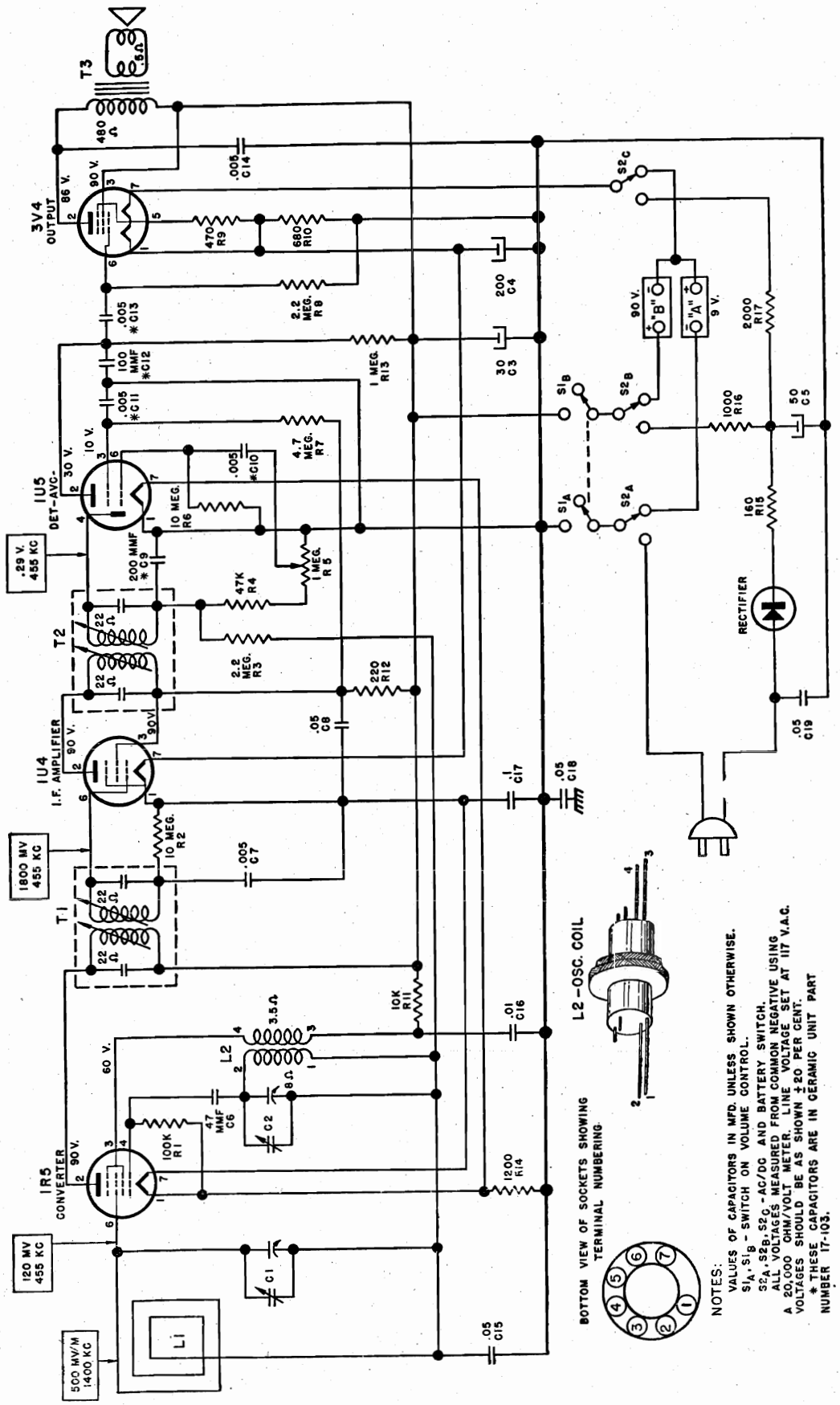

©John F. Rider

Compliments of www.nucow.com

MODEL 225,
Ch. 528.171

PARTS LIST

CHASSIS

SCHEMATIC LOCATION	PART NUMBER	DESCRIPTION
	T84-391	Cable, assembly, battery
	T83-421	Clip, I.F. transformer mounting
C1, C2, C3	T18-296	Capacitor, electrolytic
C4, C5, C6	T19-208	Capacitor, variable (3 gang)
C8, C11	T16-153	Capacitor, .005 mfd. 600 v.
C9, C10, C20, C21, C22	T17-103	Capacitor, ceramic unit
C12, C17	T16-152	Capacitor, .05 mfd. 200 v.
C13	T15-186	Capacitor, 10 mmfd. mica
C14	T16-150	Capacitor, .02 mfd. 400 v.
C15, C16	T16-157	Capacitor, .1 mfd. 200 v.
C18, C19	T16-179	Capacitor, .05 mfd. 400 v.
L3	T10-553	Coil, oscillator
R11, S1	T24-186	Control, volume, with switch
	T84-77	Cord, power, AC/DC
	T51-105	Cord, pointer travel, 29"
	T47-108	Grommet, variable condenser
	T76-13	Insulator, electrolytic
	T52-196	Knob, AC/DC/Battery switch
L1	T82-66	Loop, antenna
	T45-121	Plug, AC/DC
	T58-78	Pointer
	T39-265	Pulley, dial cord
	T83-642	Rectifier, selenium
R1	T60-744	Resistor, 22,000 ohm, ½ w. 10%
R2, R17	T60-669	Resistor, 4.7 meg., ½ w.
R3, R5	T60-728	Resistor, 10 meg., ½ w.
R4	T60-730	Resistor, 47,000 ohm, ½ w.
R6	T60-704	Resistor, 330 ohm, ½ w. 10%
R7	T60-727	Resistor, 100,000 ohm, ½ w.
R8	T60-676	Resistor, 30,000 ohm, ½ w.
R9	T60-770	Resistor, 470 ohm, ½ w. 10%
R10, R19	T60-726	Resistor, 2.2 meg., ½ w.
R12, R15	T60-729	Resistor, 1500 ohm, ½ w. 10%
R13	T60-708	Resistor, 680 ohm, ½ w. 10%
R14	T60-796	Resistor, 110 ohm, 3 w. 10%
R16	T60-757	Resistor, 2000 ohm, 10 w. 5%
R18	T60-668	Resistor, 1 meg., ½ w.
	T75-69	Shaft, tuning
	T68-39	Socket, miniature, wafer
	T79-380	Speaker, 5" P.M.
	T70-122	Spring, dial cord
S2	T69-173	Switch, AC/DC/Battery
T1, T2	T10-508	Transformer, 1st and 2nd I.F.
T3	T80-228	Transformer, output
L2	T10-535	Transformer, R.F.
	T86-51	Washer, "C", tuning shaft
	T86-80	Washer, compression, tuning shaft

CABINET

PART NUMBER	DESCRIPTION
T44-12	Baffle
T42-466	Cabinet
T67-549	Dial scale
T40-158	Escutcheon
T98-14	Grille cloth
T52-306	Knob

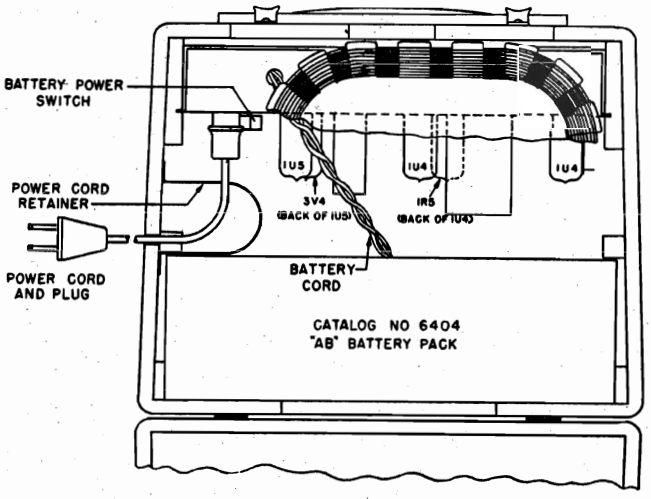

OPERATION

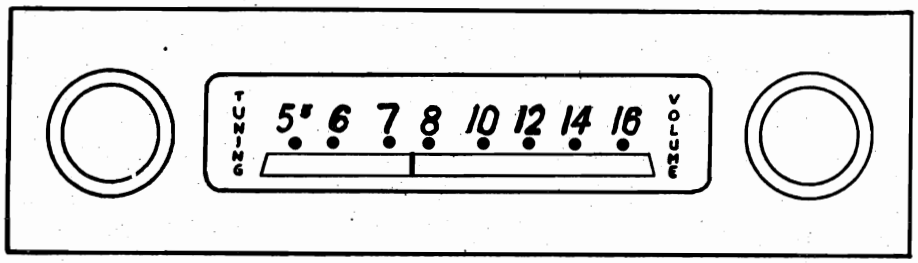

©John F. Rider

Compliments of www.nucow.com

MODEL 225,
Ch. 528.171

ALIGNMENT PROCEDURE

Output meter reading to indicate 0.05 watt across voice coil ..... 0.4 v.

Generator ground lead connected ..... To B- through 0.1 mfd. capacitor

Generator modulation ..... 30%, 400 cycles

Position of volume control ..... Fully on

Position of pointer with tuner fully closed ..... Center of pointer lined up with extreme right dot on dial backing plate. (Chassis right side up.)

Position of Tuner	Generator Freq.	Dummy Antenna	Generator Connection	Adjustments (in order shown)	Function	Max. Microvolts Input to produce .05 w. output
Min. Cap.	455 kc	0.1 mfd.	Pin #6 of 1U4 I-F Amp.	T2 (top and bottom)	I.F.	5000
Min. Cap.	455 kc	0.1 mfd.	Pin #6 of 1R5 Conv.	T1 (top and bottom)	I.F.	250
Min. Cap.	1610 kc	0.1 mfd.	Stator ant. tuner	C6	Osc.	
1400 kc	1400 kc	0.1 mfd.	Stator ant. tuner	C5	R.F.	30
1400 kc	1400 kc		Hazeltine Test Loop	C4	Loop	100

ALIGNMENT NOTES:

1. It is recommended that this set be connected to an isolation transformer when aligning on AC.
2. The alignment must be done in the order given above.
3. While making the above adjustments, keep the volume control set for maximum output and the signal generator output attenuated to avoid AVC action.

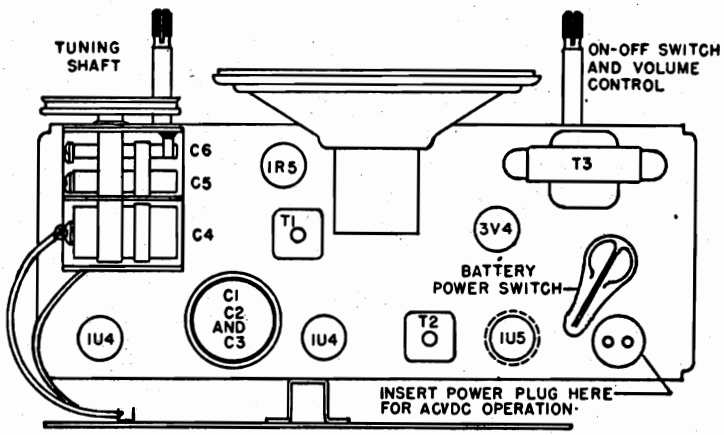

©John F. Rider

Compliments of www.nucow.com

MODEL 225,
Ch. 528.171

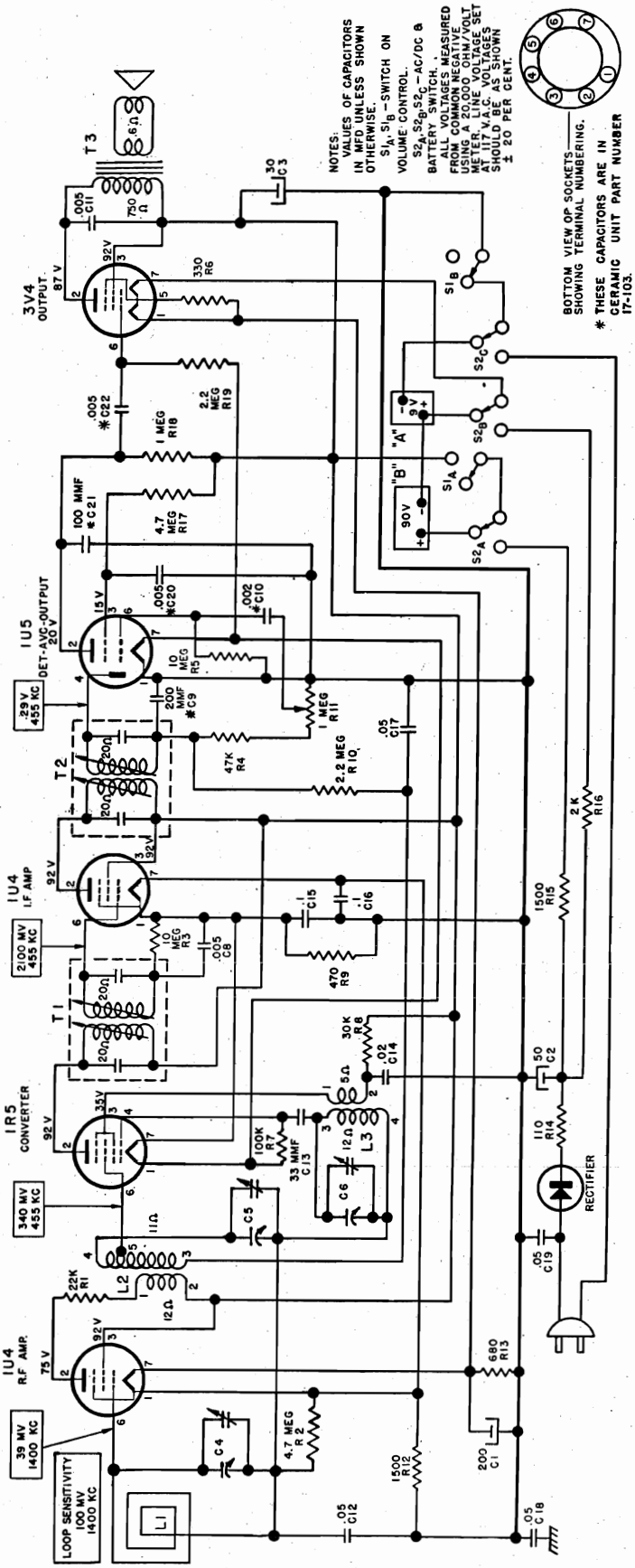

SCHEMATIC DIAGRAM FOR SILVERTONE CHASSIS 528.171

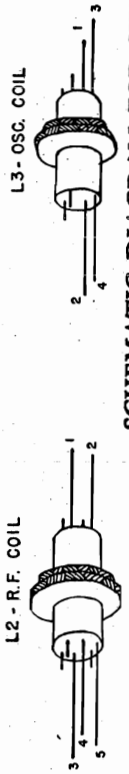

©John F. Rider

Compliments of www.nucow.com

MODEL 225,
Ch. 528.171-1

ALIGNMENT PROCEDURE

Output meter reading to indicate 0.05 watt across voice coil ..... 0.4 v.

Generator ground lead connected ..... To B- through 0.1 mfd. capacitor

Generator modulation ..... 30%, 400 cycles

Position of volume control ..... Fully on

Position of pointer with tuner fully closed ..... Center of pointer lined up with extreme right dot on dial backing plate. (Chassis right side up.)

Position of Tuner	Generator Freq.	Dummy Antenna	Generator Connection	Adjustments (in order shown)	Function	Max. Microvolts Input to produce .05 w. output
Min. Cap.	455 kc	0.1 mfd.	Pin #6 of 1U4 I-F Amp.	T2 (top and bottom)	I.F.	5000
Min. Cap.	455 kc	0.1 mfd.	Pin #6 of 1R5 Conv.	T1 (top and bottom)	I.F.	250
Min. Cap.	1625 kc	0.1 mfd.	Stator ant. tuner	C6	Osc.	
1400 kc	1400 kc	0.1 mfd.	Stator ant. tuner	C5	R.F.	30
1400 kc	1400 kc		Hazeltine Test Loop	C4	Loop	100

ALIGNMENT NOTES:

1. It is recommended that this set be connected to an isolation transformer when aligning on AC.
2. The alignment must be done in the order given above.
3. While making the above adjustments, keep the volume control set for maximum output and the signal generator output attenuated to avoid AVC action.

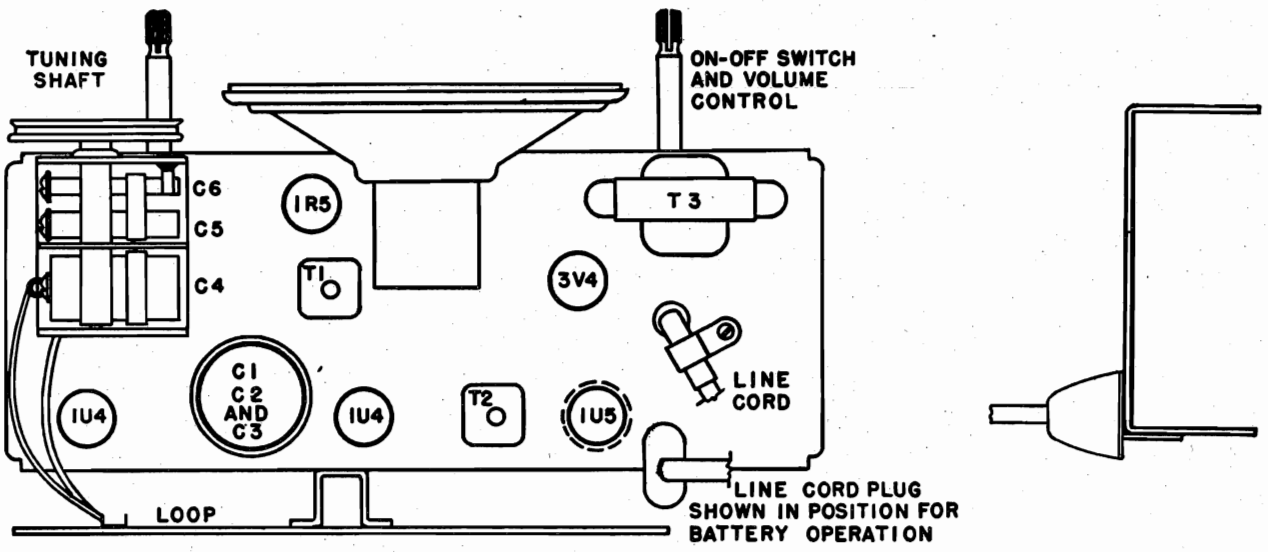

©John F. Rider

Compliments of www.nucow.com

MODEL 225,
Ch. 528.171-1

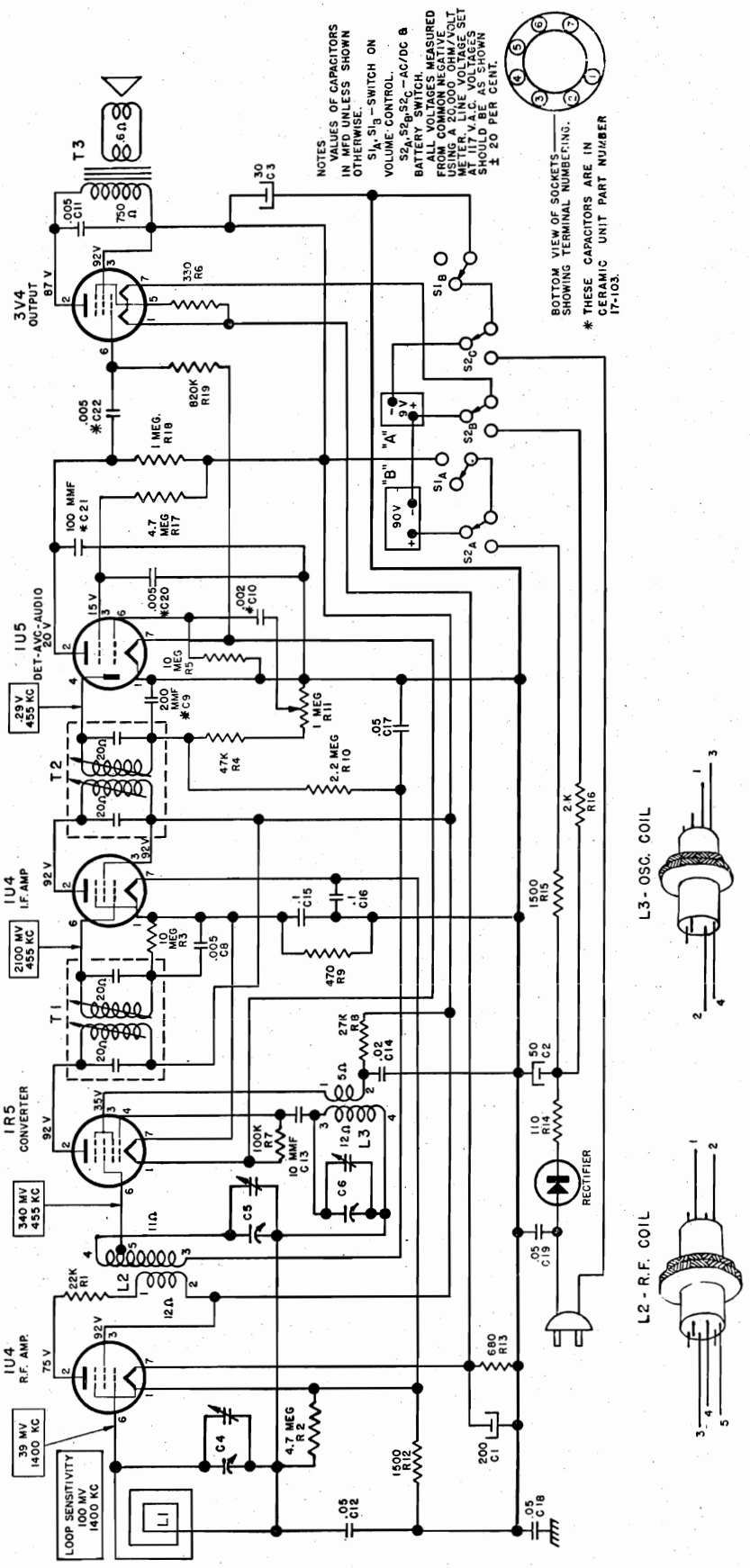

SCHEMATIC DIAGRAM FOR SILVERTONE CHASSIS 528.171-1

©John F. Rider

Compliments of www.nucow.com

MODEL 225,
Ch. 528.171-1

PARTS LIST

CHASSIS

SCHEMATIC LOCATION	PART NUMBER	DESCRIPTION
	T84-391	Cable, assembly, battery
	T83-421	Clip, I.F. transformer mounting
C1, C2, C3	T18-296	Capacitor, electrolytic
C4, C5, C6	T19-208	Capacitor, variable (3 gang)
C8, C11	T16-153	Capacitor, .005 mfd. 600 v.
C9, C10, C20, C21, C22	T17-103	Capacitor, ceramic unit
C12, C17	T16-152	Capacitor, .05 mfd. 200 v.
C13	T15-186	Capacitor, 10 mmfd. mica
C14	T16-150	Capacitor, .02 mfd. 400 v.
C15, C16	T16-157	Capacitor, .1 mfd. 200 v.
C18, C19	T16-179	Capacitor, .05 mfd. 400 v.
L3	T10-553	Coil, oscillator
R11, S1	T24-186	Control, volume, with switch
	T23-151	Cord, power, AC/DC
	T51-105	Cord, pointer travel, 29"
	T47-108	Grommet, variable condenser
	T76-13	Insulator, electrolytic
L1	T82-66	Loop, antenna
	T58-78	Pointer
	T39-265	Pulley, dial cord
	T83-642	Rectifier, selenium
R1	T60-744	Resistor, 22,000 ohm, ½ w. 10%
R2, R17	T60-669	Resistor, 4.7 meg., ½ w.
R3, R5	T60-728	Resistor, 10 meg., ½ w.
R4	T60-730	Resistor, 47,000 ohm, ½ w.
R6	T60-704	Resistor, 330 ohm, ½ w. 10%
R7	T60-727	Resistor, 100,000 ohm, ½ w.
R8	T60-745	Resistor, 27,000 ohm, ½ w.
R9	T60-770	Resistor, 470 ohm, ½ w. 10%
R10	T60-726	Resistor, 2.2 meg., ½ w.
R12, R15	T60-729	Resistor, 1500 ohm, ½ w. 10%
R13	T60-708	Resistor, 680 ohm, ½ w. 10%
R14	T60-796	Resistor, 110 ohm, 3 w. 10%
R16	T60-757	Resistor, 2000 ohm, 10 w. 5%
R18	T60-668	Resistor, 1 meg., ½ w.
R19	T60-799	Resistor, 820,000 ohm, ½ w.
	T75-69	Shaft, tuning
	T68-39	Socket, miniature, wafer
	T79-380	Speaker, 5" P.M.
	T70-122	Spring, dial cord
S2	T69-186	Switch, AC/DC/Battery
T1, T2	T10-508	Transformer, 1st and 2nd I.F.
T3	T80-228	Transformer, output
L2	T10-535	Transformer, R.F.
	T86-51	Washer, "C", tuning shaft
	T86-80	Washer, compression, tuning shaft

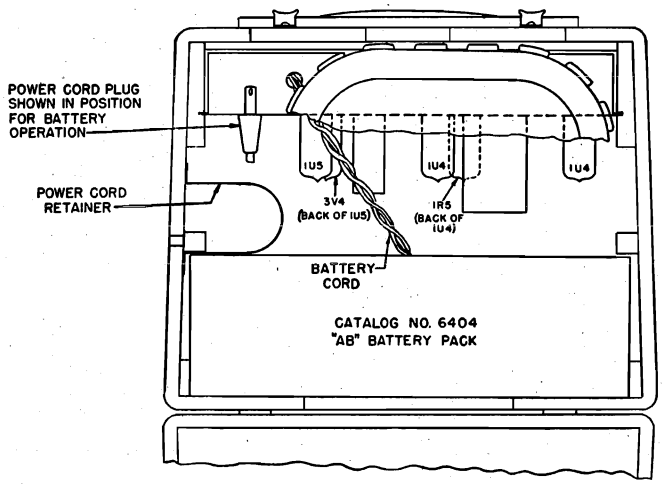

CABINET

PART NUMBER	DESCRIPTION
T44-12	Baffle
T42-466	Cabinet
T67-549	Dial scale
T40-158	Escutcheon
T98-14	Grille cloth
T52-306	Knob

OPERATION

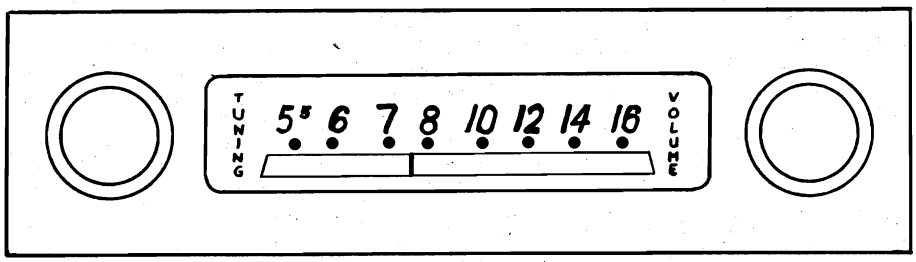

©John F. Rider

Compliments of www.nucow.com

MODEL 6293,
Ch. 528.6293

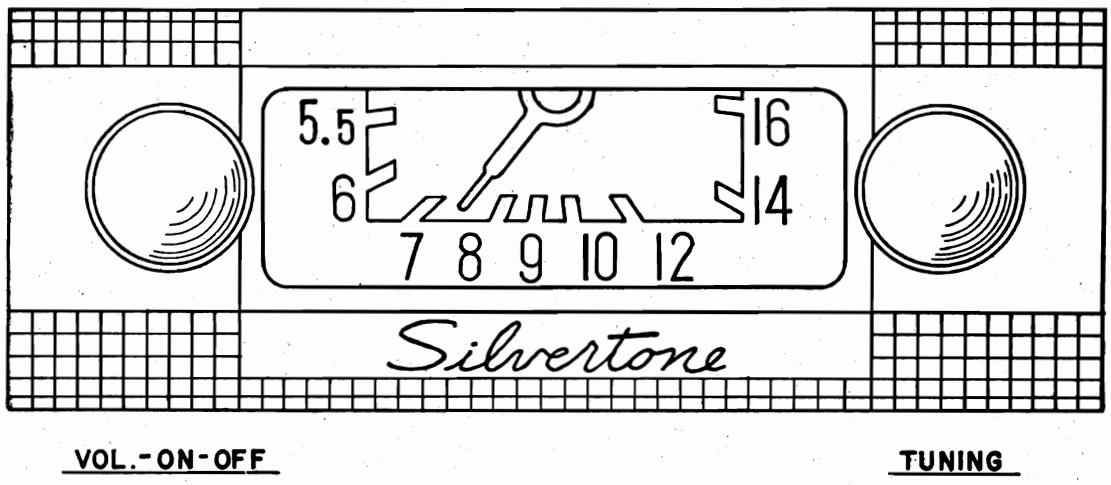

Fig. 1. Front View

DESCRIPTION

Your new automobile receiver is a 5-tube (plus rectifier) superheterodyne, designed to operate from the 6 volt storage battery in your car. It is a universal type of receiver for mounting underneath the dash panel. It has a self-contained PM speaker, and covers the frequency range 540 to 1600 K.C. Two simple controls are provided for operating the receiver. (see fig. 1).

Special care has been taken in the design of this receiver to insure the finest in sensitivity and selectivity, there-by insuring good reception of even distant or weak stations. The unit is simple to install, the antenna input circuit adjustable to permit the use of any two or three section whip or "fish pole" antenna.

OPERATION

To turn the receiver on, rotate the volume control and switch knob (left hand knob) to the right about half its range. After allowing about 30 seconds for the tubes to warm up, the desired station may be tuned by rotating the tuning control (right hand knob) to the desired frequency. The dial scale is calibrated in kilocycles minus the final two zeros. After the station has been properly tuned, the volume may be adjusted by means of the volume control knob. To increase the volume, turn the control to the right; to decrease the volume, turn it to the left. Turning this control to the left as far as it will go, turns the radio off.

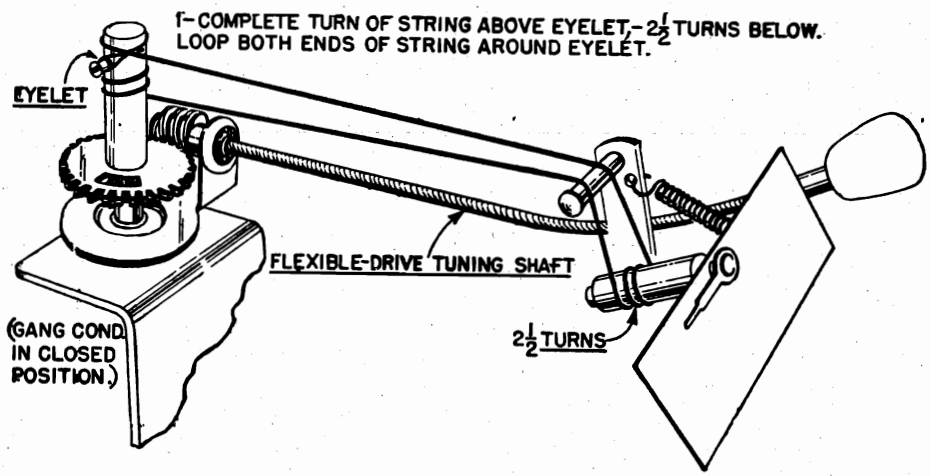

DIAL POINTER DRIVE & STRINGING DIAGRAM

Fig. 2.

©John F. Rider

Compliments of www.nucow.com

MODEL 6293,
Ch. 528.6293

INSTALLATION

This radio comes to you complete with all hardware necessary for mounting, and also with a distributor suppressor, ammeter condenser and generator condenser. By referring to Figures 1, 3 and 9, and following the instructions outlined below, you will find that it is very simple to install.

First determine where the receiver is to be mounted by holding it with the hands in the approximate location in the car. Using the front mounting bracket as a template, mark and drill two 5/8" holes in the instrument panel flange. Now secure the mounting bracket to the radio receiver with the screws provided, and then mount the front of the radio to the instrument panel, using the bolts, lock washers and nuts provided for this purpose. The back of the radio is supported by means of the rear mounting strap. The mounting strap should be formed by bending to the correct angles, as illustrated in Figure 3, so that it can then be fastened to the fire wall. After marking and center-punching the fire wall at the correct location, drill with a 3/8" drill. The mounting strap is then secured to the radio and fastened to the fire wall of the car with the 1/4" bolt, lock washer and nut furnished with the receiver.

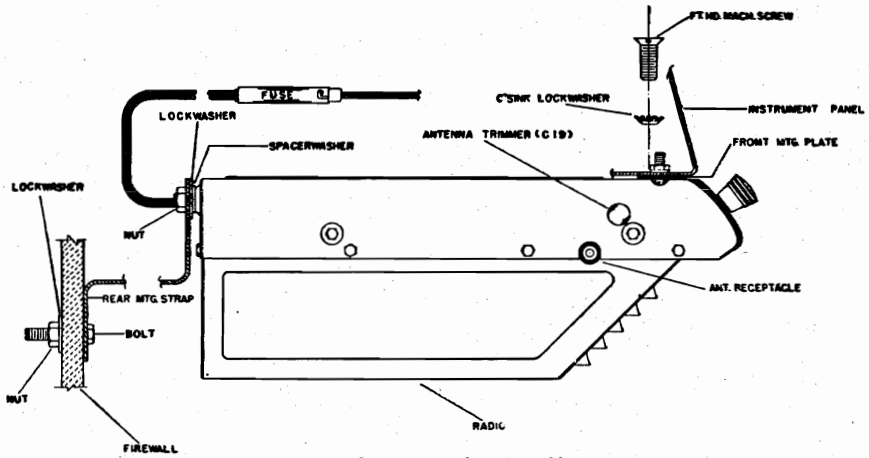

Fig. 3. Side View, Showing Mounting

CONNECTING THE RADIO

The antenna cable should be connected to the radio by inserting the jack into the antenna receptacle provided on the side of the radio. Connect the battery cable to the hot side of the ammeter behind the instrument panel. The fuse should then be inserted into the cable receptor.

FINAL ADJUSTMENTS

The input circuit has been especially designed to be used with a low capacity antenna, of the fish pole or whip type.

To adjust the antenna trimmer condenser, carefully tune the receiver to a weak station at approximately 1400 kilocycles (K.C.). Remove the snap button covering the antenna trimmer (See Figure 3) and adjust the trimmer for maximum volume by turning the screw to the left or right with a small screw driver.

ACCESSORIES FURNISHED FOR INSTALLATION

All of the parts that are needed for installing this receiver are furnished in the Mounting Parts Kit, part No. S-84-192, and the Suppression and Misc. Parts Kit, part No. S84-232, as listed below. Also supplied are the rear mounting strap, part No. B31-134, and the front mounting plate, part No. A31-147.

S84-192 MOUNTING PARTS KIT

- 1 1/4" Bolt
- 2 1/4" Lock Washers
- 2 1/4" Hexagon Nuts
- 2 10-32 x 5/8" Screws
- 2 10-32 x 3/8" Screws
- 2 External Tooth Lock Washers
- 2 Internal Tooth Lock Washers
- 2 10-32 Hexagon Nuts
- 1 Washer-Spacer

S84-232 SUPPRESSION KIT & MISC. PARTS

- 1 S84-233 "A" lead assem.
- 1 A43-10 Fuse
- 1 A81-13 Sleeve (for fuse)
- 1 S84-193 Suppression Kit consisting of:
  - 2 .5 MFD Condensers
  - 1 Distributor Suppressor
  - 20" Wire Braid

© John F. Rider

Compliments of www.nucow.com

MODEL 6293,
Ch. 528.6293

ELIMINATING MOTOR NOISE

IMPORTANT: Special care should be taken when mounting the radio to make sure all paint, grease, rust, etc., is removed from all three mounting points. A good electrical contact at these points will aid materially in eliminating motor noise.

GENERATOR CONDENSER

The generator condenser must be connected to the battery terminal of the generator in all cases. If your car is equipped with a generator using an automatic regulator, make sure the condenser IS NOT fastened to the field winding terminal. If in doubt, your local car dealer can advise you as to where the car manufacturer recommends connecting it.

DISTRIBUTOR SUPPRESSOR

Remove from distributor cap the high tension lead from coil to distributor. Cut the lead two inches from the end, and screw the distributor resistor on to the coil lead, then screw the short length into the resistor and plug the cable into the distributor cap.

AMMETER CONDENSER

A .5 MFD bypass condenser is furnished for attaching to the ammeter. This should be connected to either side of the ammeter with the ground lug fastened to a good ground nearby. In most cases the use of this condenser, the distributor suppressor, and the generator condenser, will eliminate all objectionable ignition interference.

ELECTRICAL ACCESSORIES

In some cases, it may be found that car accessories such as electric heaters, lighters, automatic relays, or gauges, may cause interference while in operation. Proper procedure in such cases is to try another by-pass condenser from ground to the suspected accessory until the source of the interference is found. The condenser then should be permanently mounted in this location.

HIGH AND LOW TENSION LEADS

In many cases the low tension battery leads, etc., are grouped together with the high tension wires. These leads will very often pick up motor noise and feed it into the receiver through the battery circuit. In cases such as these it will be necessary to separate the low tension from the high tension wires and run them through another hole if they run from the engine compartment up to the instrument panel. This condition is particularly true on the V-8 Ford, as the battery and primary leads run through a special tube which also houses the high tension leads. Shield and ground these leads.

IGNITION COILS

In cars where the ignition coil is located on the back side of the instrument panel it is often necessary to use an additional condenser. It must be installed from the battery side of the ignition coil to the closest ground on the instrument panel.

Short leads are very important. Where coils are mounted either on the instrument panel or in the driver's compartment, it may be necessary to shield the high tension lead from the coil to the distributor.

WHEEL STATIC

Wheel Static is a form of interference caused by the rotation of the front wheels of the car, and it is, of course, only noticed when the car is in motion. If this form of interference is present it can be eliminated by installing wheel static collector springs between the inner hub cap and the spindle shaft.

BONDING OF FIRE WALL RODS AND TUBES

Bonding the steering column to the fire wall with a short braid may also be effective. Clean the paint from the steering column at the fire wall where the column enters the motor compartment, and solder on a short piece of braid. Ground the end of the braid to the fire wall.

In some cases it may be necessary to ground the tubes and rods coming through the fire wall in order to reduce the interference. Clean them with emery cloth and spot-solder the braid, fastening the end under a convenient screw. A 1/4" piece of wire braid 20 inches long is furnished in the suppression kit assembly for this purpose.

©John F. Rider

Compliments of www.nucow.com

MODEL 6293,
Ch. 528.6293

ELECTRICAL SPECIFICATIONS

Power Supply.....6.3 volts DC
Current.....6.2 amp. average
Frequency Range.....540 to 1600 KC
I. F. Frequency.....455 KC
Speaker.....4" P. M.
Power Output.....1.75 watts, undistorted
3 watts, maximum
Sensitivity.....1 microvolt average for 1 watt output
Selectivity...40 KC broad at 1000 times signal, at 1000 KC

The tube compliment of this receiver is as follows:

1—6SK7GT—R. F. Amplifier.

1—6SA7GT—Converter.

1—6SK7GT—I.F. Amplifier.

1—6SQ7—Detector—AVC—1st audio.

1—6V6GT—Power output.

1—6X5GT—Rectifier.

SERVICE NOTES

Voltages taken from the different points of the circuit to the chassis are measured with volume control in maximum position, all tubes in their sockets, no signal applied, and with a volt meter having a resistance of 20,000 ohms per volt. These voltages are clearly shown on the schematic diagram (Fig. 7).

All voltages should be measured with an input voltage of 6.3 volts DC.

To check for open by-pass condensers, shunt each condenser with another one having the same capacity and voltage rating which is known to be good until the defective unit is located.

ALIGNING INSTRUCTION

Never attempt any adjustments on this receiver unless it becomes necessary to replace a coil or transformer, or the adjustments have been tampered with in the field. Always make certain that other circuit components, such as tubes, condensers, resistors, etc., are normal before proceeding with realignment.

If realignment is necessary follow the instructions given under the heading "ALIGNMENT PROCEDURE". After realignment has been completed repeat the procedure as a final check.

INSTRUCTIONS FOR REMOVING CHASSIS FROM THE CASE

The bottom cover (the one with the speaker louvers) can be removed to permit servicing of major components, such as tubes and vibrator, by removing the eight (8) screws holding it to the top cover. There are three (3) screws on each side, one (1) in the rear, and one (1) in the front.

CAUTION: Before attempting to remove the top cover, to service condensers, resistors, etc., the screw connecting the spark plate to the "A" terminal (inside case) must be removed. This is a round head screw, and is located on the rear of the case, close to the mounting stud bolt. It is recessed in a ½ inch hole in the case itself, thereby permitting contact with the spark plate.

After removing the spark plate screw, remove the two knobs by pulling forward and remove the eight (8) screws securing the cover to the chassis. Lift the chassis at the rear, at the same time moving it away from the front of the case so that the volume and tuning shafts will clear the holes in the cover.

NOTE: When reinstalling the chassis into the case, be sure the screw connecting the spark plate to the "A" terminal (inside case) is tightened very securely, otherwise the receiver will not operate properly.

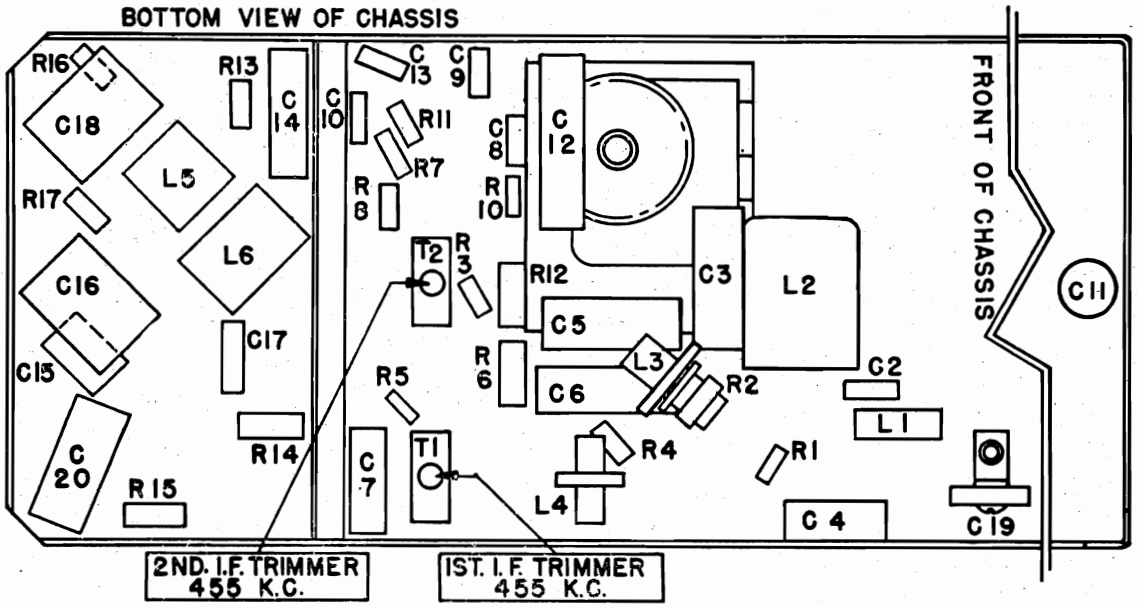

Fig. 4. Bottom View

©John F. Rider

Compliments of www.nucow.com

MODEL 6293, Ch. 528.6293

ALIGNMENT PROCEDURE

Volume control—Maximum, all adjustments.

No signal applied to antenna.

Power input—6.3 volts.

Connect dummy antenna in series with output lead of signal generator.

Connect output meter across voice coil.

Connect ground lead of signal generator to chassis.

Repeat alignment procedure as a final check.

The following equipment is necessary for proper alignment:

Signal generator that will provide the test frequencies as listed, modulated 400 cycles, 30%.

Non-metallic screwdriver.

Output meter. (0.04 volt for 0.05 watt output.)

Dummy antennas—.1 MFD., 75 MMFD.

For alignment points refer to Figures 5 and 6.

Dial Setting	Generator Frequency	Dummy Ant.	Generator Connections	Trimmer Reference	Trimmer Adjustment	Trimmer Function
Fully Open	455 KC	.1 MFD.	6SA7 Grid	T2	Maximum	Output I.F.
Fully Open	455 KC	.1 MFD.	6SA7 Grid	T1	Maximum	Input I.F.
Fully Open	1600 KC	75 MMFD.	Ant. lead	C1C	Maximum	Oscillator
Tune in signal from generator	1400 KC	75 MMFD.	Ant. lead	C1B	Maximum	R.F.
Tune in signal from generator	1400 KC	75 MMFD.	Ant. lead	C19	Maximum	Antenna

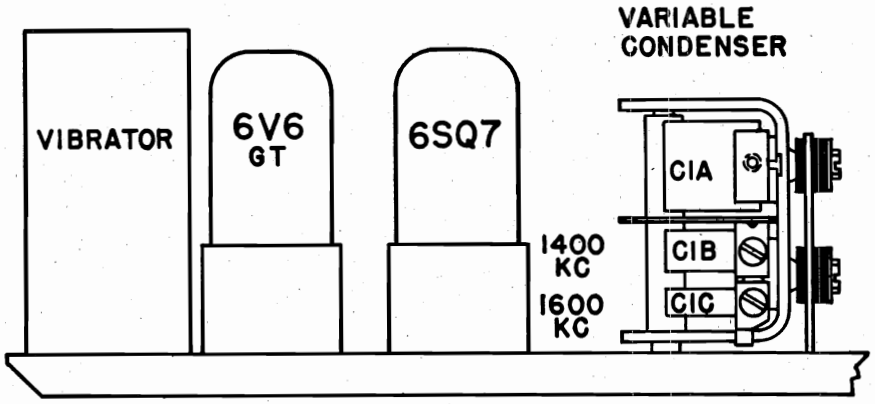

Fig. 5. Trimmer Locations

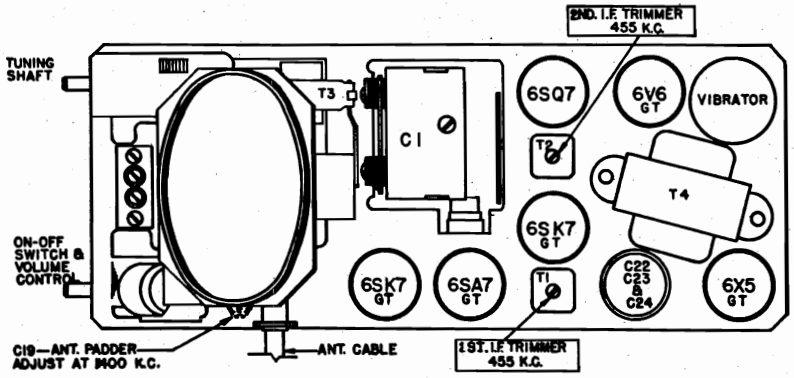

Fig. 6. Tube and Trimmer Locations

©John F. Rider

Compliments of www.nucow.com

MODEL 6293,
Ch. 528.6293

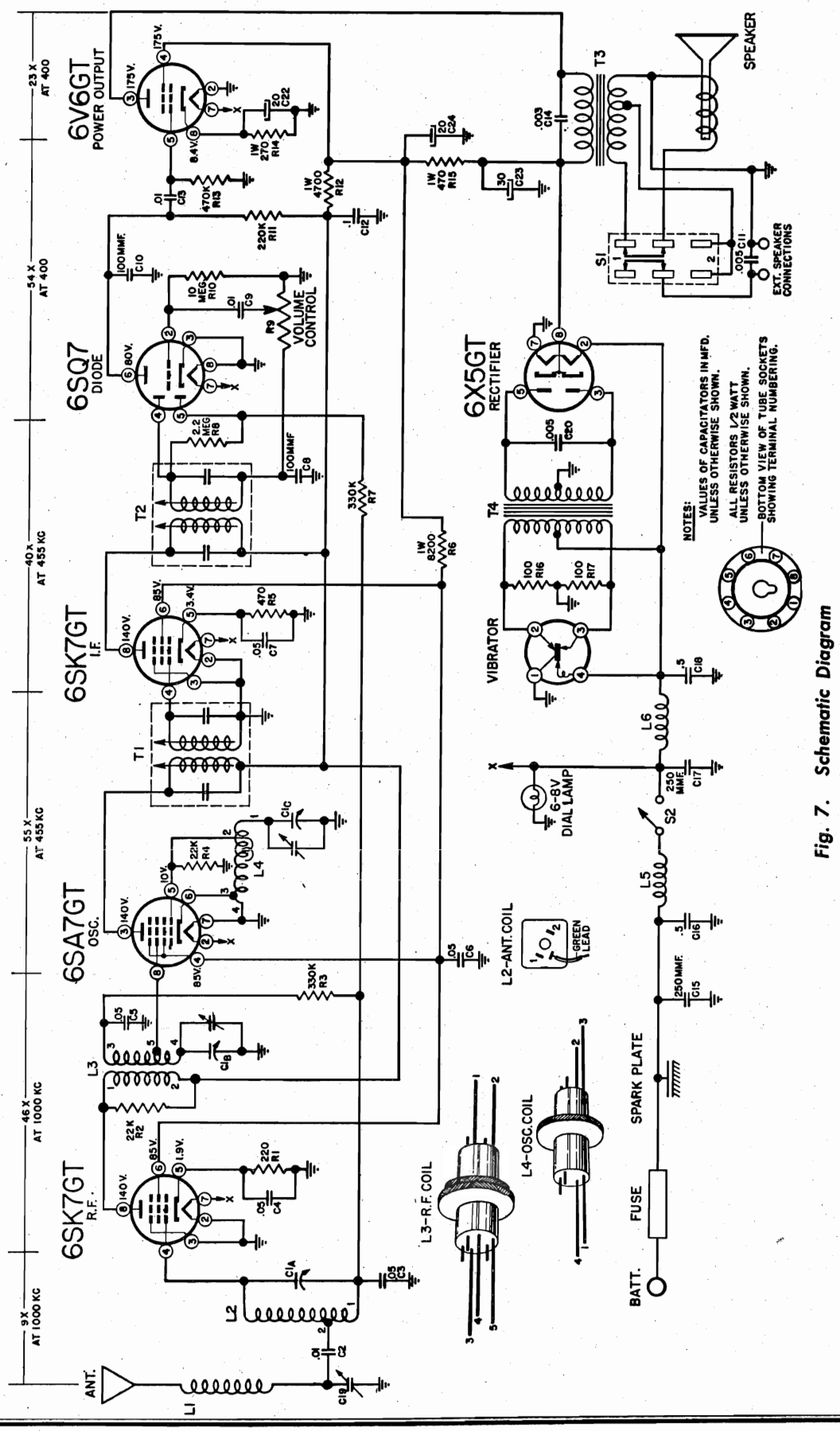

Fig. 7. Schematic Diagram

©John F. Rider

Compliments of www.nucow.com

INSTRUCTIONS FOR INSTALLATION OF REAR SEAT SPEAKER

Your Silvertone Auto Radio, Chassis Number 528.6293 includes a special feature which makes it simple and easy to install an additional speaker in the rear of the car. A speaker with the proper voice coil impedance (3.2 ohms) for such an installation is available at the Sears store where you bought your Silvertone Auto Radio.

The terminal strip in the illustration below is accessible through an opening in the case. The two wire leads from the rear seat speaker should be connected to these terminals. This completes the electrical installation of the speaker. The switch at the right is for operation of the rear seat speaker. In position 1, only the speaker in the case is connected; in position 2, both speakers are connected.

IMPORTANT: When there is no rear seat speaker installation, ALWAYS keep the switch in position 1.

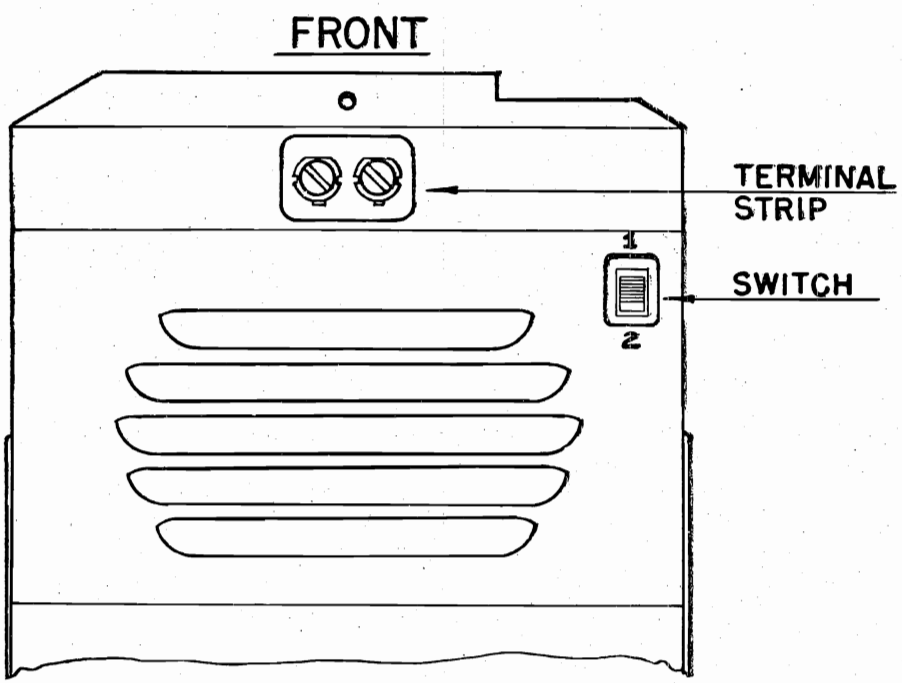

Fig. 8. Bottom View of Case

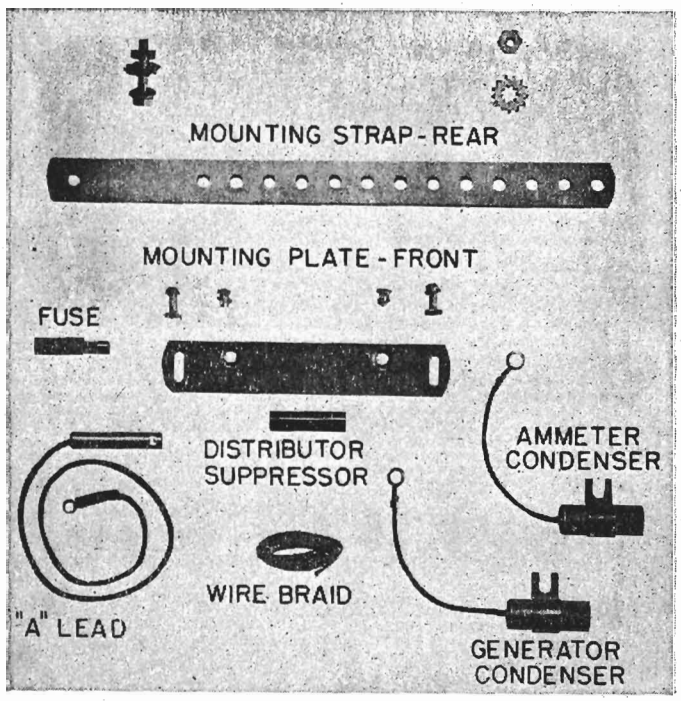

Fig. 9. Mounting Parts

©John F. Rider
Compliments of www.nucow.com

MODEL 6293,
Ch. 528.6293

REPAIR PARTS LIST

Schematic Location	Part No.	Description
C1A, C1B, C1C	B19-203	Capacitor—variable, worm drive
C2, C9, C13	A16-201	Capacitor—.01 mfd.—600 v.
C3, C5, C6	A16-189	Capacitor—.05 mfd.—400 v.
C4, C7	A16-197	Capacitor—.05 mfd.—200 v.
C8, C10	A15-196	Capacitor—mica—100 mmfd.
C11	A16-177	Capacitor—ceramic—.005 mfd.
C12	A16-187	Capacitor—.1 mfd.—400 v.
C14	A16-200	Capacitor—.003 mfd.—600 v.
C15, C17	A15-176	Capacitor—mica—250 mmfd.
C16	A16-184	Capacitor—.5 mfd.—100 v.
C18	A16-202	Capacitor—.5 mfd.—100 v.
C19	A20-145	Capacitor—ceramic—antenna trimmer
C20	A16-185	Capacitor—.005 mfd.—1600 v.
	A18-289	Capacitor—electrolytic
C22		20 mfd.—25 v.
C23		30 mfd.—350 v.
C24		20 mfd.—350 v.
	A83-421	Clip—I.F. transformer mounting
L1	A10-527	Coil—Antenna loading
L2	B10-525	Coil—Antenna
L3	B10-528	Coil—R. F.
L4	B10-526	Coil—Oscillator
L5	A33-229	Coil—"A" line choke
L6	A33-234	Coil—Vibrator hash choke
R9, S2	A24-177	Control—ON-OFF and VOLUME
	A51-105	Cord—Pointer travel, 17"
	B67-541	Dial—Station
	A47-112	Grommet—Speaker and variable capacitor mounting
	A47-114	Grommet—Fibre—Flexible shaft bearing
	S84-233	Kit—"A" lead assembly
	S84-192	Kit—Mounting parts
	S84-193	Kit—Suppression, assembly
	A52-293	Knob—Volume and tuning
	A89-10	Lamp—Dial—G. E. No. 422
	A31-147	Plate—Mounting, front
	A58-76	Pointer—Dial
	A87-38	Receptacle—Antenna cable
R1	A60-753	Resistor—220 ohm—½ w.
R2, R4	A60-744	Resistor—22,000 ohm—½ w.
R3, R7	A60-661	Resistor—330,000 ohm—½ w.
R5	A60-722	Resistor—470 ohm—½ w.
R6	A60-766	Resistor—8200 ohm—1 w.
R8	A60-726	Resistor—2.2 megohm—½ w.
R10	A60-728	Resistor—10 megohm—½ w.
R11	A60-667	Resistor—220,000 ohm—½ w.
R12	A60-765	Resistor—4700 ohm—1 w.
R13	A60-731	Resistor—470,000 ohm—½ w.
R14	A60-754	Resistor—270 ohm—1 w.
R15	A60-694	Resistor—470 ohm—½ w.
R16, R17	A60-752	Resistor—100 ohm—½ w.
	B75-72	Shaft—Tuning drive—flexible
	B79-373	Speaker—4" P.M.
	B31-134	Strap—Mounting, rear
S1	A69-185	Switch—Rear seat speaker
T1	A10-521	Transformer—I.F. No. 1
T2	A10-529	Transformer—I.F. No. 2
T3	B80-249	Transformer—Output (part of speaker)
T4	B80-243	Transformer—Power
	A34-105	Vibrator—Mallory No. 659

IMPORTANT: All tubular condensers must be high temperature (85°C.) wax type.

©John F. Rider

Compliments of www.nucow.com

MODEL 6293,
Ch. 528.6293-2

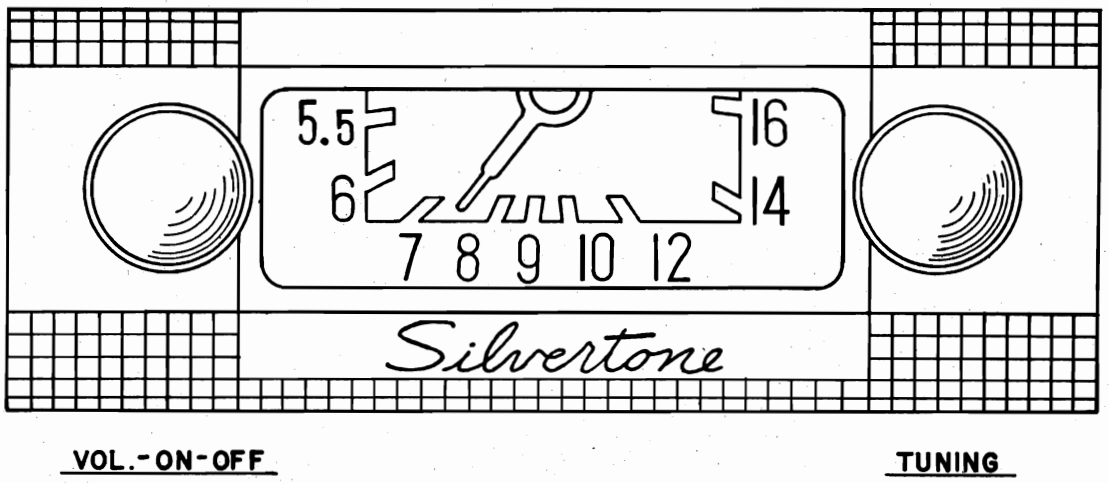

Fig. 1 Front View

DESCRIPTION

Your new automobile receiver is a 5-tube (plus rectifier) superheterodyne, designed to operate from the 6 volt storage battery in your car. It is a universal type of receiver for mounting underneath the dash panel. It has a self-contained PM speaker, and covers the frequency range 540 to 1600 K.C. Two simple controls are provided for operating the receiver. (see fig. 1).

Special care has been taken in the design of this receiver to insure the finest in sensitivity and selectivity, there-by insuring good reception of even distant or weak stations. The unit is simple to install, the antenna input circuit adjustable to permit the use of any two or three section whip or "fish pole" antenna.

OPERATION

To turn the receiver on, rotate the volume control and switch knob (left hand knob) to the right about half its range. After allowing about 30 seconds for the tubes to warm up, the desired station may be tuned by rotating the tuning control (right hand knob) to the desired frequency. The dial scale is calibrated in kilocycles minus the final two zeros. After the station has been properly tuned, the volume may be adjusted by means of the volume control knob. To increase the volume, turn the control to the right; to decrease the volume, turn it to the left. Turning this control to the left as far as it will go, turns the radio off.

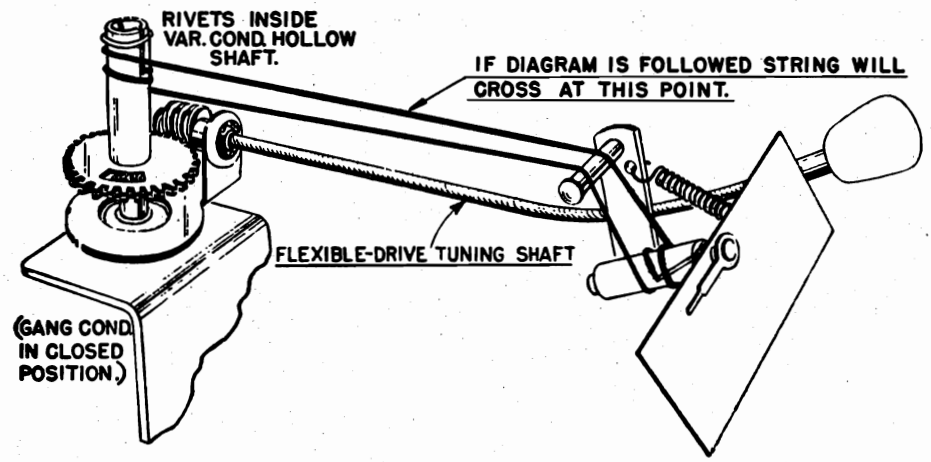

DIAL POINTER DRIVE & STRINGING DIAGRAM

Fig. 2

©John F. Rider

Compliments of www.nucow.com

MODEL 6293,
Ch. 528.6293-2

INSTALLATION

This radio comes to you complete with all hardware necessary for mounting, and also with a distributor suppressor, ammeter condenser and generator condenser. By referring to Figures 1 and 2, and following the instructions outlined below, you will find that it is very simple to install.

First determine where the receiver is to be mounted by holding it with the hands in the approximate location in the car. Using the front mounting bracket as a template, mark and drill two 7/32" holes in the instrument panel flange. Now secure the mounting bracket to the radio receiver with the screws provided, and then mount the front of the radio to the instrument panel, using the bolts, lock washers and nuts provided for this purpose. The back of the radio is supported by means of the rear mounting strap. The mounting strap should be formed by bending to the correct angles, as illustrated in Figure 3, so that it can then be fastened to the fire wall. After marking and center-punching the fire wall at the correct location, drill with a 3/8" drill. The mounting strap is then secured to the radio and fastened to the fire wall of the car with the 1/4" bolt, lock washer and nut furnished with the receiver.

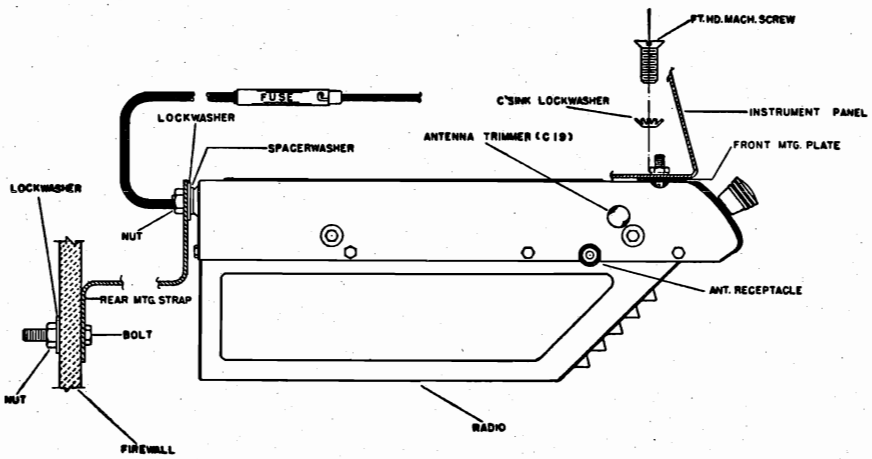

Fig. 2 Side View, Showing Mounting

CONNECTING THE RADIO

The antenna cable should be connected to the radio by inserting the jack into the socket provided on the side of the radio. Connect the battery cable to the hot side of the ammeter behind the instrument panel. The fuse should then be inserted into the cable receptor.

FINAL ADJUSTMENTS

The input circuit has been especially designed to be used with a low capacity antenna, of the fish pole or whip type.

To adjust the antenna trimmer condenser, carefully tune the receiver to a weak station at approximately 1100 kilocycles (K.C.). Remove the snap button covering the antenna trimmer (See Figure 2) and adjust the trimmer for maximum volume. A small screw driver will be needed for this purpose.

ACCESSORIES FURNISHED FOR INSTALLATION

All of the parts that are needed for installing this receiver are furnished in the Mounting Parts Kit, part No. S84-192, and the Suppression and Misc. Parts Kit, part No. S84-232 as listed below. Also supplied are the rear mounting strap, part No. B31-134, and the front mounting plate, part No. A31-147.

S84-192 MOUNTING PARTS KIT

- 1 1/4" Bolt
- 2 1/4" Lock Washers
- 2 1/4" Hexagon Nuts
- 2 10-32 x 5/8" Screws
- 2 10-32 x 3/8" Screws
- 2 External Tooth Lock Washers
- 2 Internal Tooth Lock Washers
- 2 10-32 Hexagon Nuts
- 1 Washer-Spacer

S84-232 SUPPRESSION KIT & MISC. PARTS

- 1 S84-233 "A" lead assem.
- 1 A43-10 Fuse
- 1 A81-13 Sleeve (for fuse)
- 1 S84-193 Suppression Kit consisting of:
  - 2 .5 MFD Condensers
  - 1 Distributor Suppressor
  - 20" Wire Braid

©John F. Rider

Compliments of www.nucow.com

MODEL 6293,
Ch. 528.6293-2

ELIMINATING MOTOR NOISE

IMPORTANT: Special care should be taken when mounting the radio to make sure all paint, grease, rust, etc., is removed from all three mounting points. A good electrical contact at these points will aid materially in eliminating motor noise. (The following steps may not be necessary in all cases. Install your radio and operate it before making changes.)

GENERATOR CONDENSER

The generator condenser must be connected to the battery terminal of the generator in all cases. If your car is equipped with a generator using an automatic regulator, make sure the condenser IS NOT fastened to the field winding terminal. If in doubt, your local car dealer can advise you as to where the car manufacturer recommends connecting it.

DISTRIBUTOR SUPPRESSOR

Remove from distributor cap the high tension lead from coil to distributor. Cut the lead two inches from the end, and screw the distributor resistor on to the coil lead, then screw the short length into the resistor and plug the cable into the distributor cap.

AMMETER CONDENSER

A .5 MFD bypass condenser is furnished for attaching to the ammeter. This should be connected to either side of the ammeter with the ground lug fastened to a good ground nearby. In most cases the use of this condenser, the distributor suppressor, and the generator condenser, will eliminate all objectionable ignition interference.

ELECTRICAL ACCESSORIES

In some cases, it may be found that car accessories such as electric heaters, lighters, automatic relays, or gauges, may cause interference while in operation. Proper procedure in such cases is to try another by-pass condenser from ground to the suspected accessory until the source of the interference is found. The condenser then should be permanently mounted in this location.

HIGH AND LOW TENSION WIRES

In many cases the low tension battery leads, etc., are grouped together with the high tension wires. These wires will very often pick up motor noise and feed it into the receiver through the battery circuit. In cases such as these it will be necessary to separate the low tension from the high tension wires and run them through another hole if they run from the engine compartment up to the instrument panel. This condition is particularly true on the V-8 Ford, as the battery and primary leads run through a special tube which also houses the high tension leads. Shield and ground these leads.

IGNITION COILS

In cars where the ignition coil is located on the back side of the instrument panel it is often necessary to use an additional condenser. It must be installed from the battery side of the ignition coil to the closest ground on the instrument panel.

Short leads are very important. Where coils are mounted either on the instrument panel or in the driver's compartment, it may be necessary to shield the high tension lead from the coil to the distributor.

WHEEL STATIC

Wheel Static is a form of interference caused by the rotation of the front wheels of the car, and it is, of course, only noticed when the car is in motion. If this form of interference is present it can be eliminated by installing wheel static collector springs between the inner hub cap and the spindle shaft.

BONDING OF FIRE WALL RODS AND TUBES

Bonding the steering column to the fire wall with a short braid may also be effective. Clean the paint from the steering column at the fire wall where the column enters the motor compartment, and solder on a short piece of braid. Ground the end of the braid to the fire wall.

In some cases it may be necessary to ground the tubes and rods coming through the fire wall in order to reduce the interference. Clean them with emery cloth and spot-solder the braid, fastening the end under a convenient screw. A 1/4" piece of wire braid 20 inches long is furnished in the suppression kit assembly for this purpose.

©John F. Rider

Compliments of www.nucow.com

MODEL 6293,
Ch. 528.6293-2

ELECTRICAL SPECIFICATIONS

Power Supply.....6.3 volts DC
Current.....6.2 amp. average
Frequency Range.....540 to 1600 KC
I. F. Frequency.....455 KC
Speaker.....4" P. M.
Power Output.....1.75 watts, undistorted
3 watts, maximum
Sensitivity.....3 microvolt average for 1 watt output
Selectivity...40 KC broad at 1000 times signal, at 1000 KC

This receiver contains the following:

1—6SK7GT—R. F. Amplifier.

1—6SA7GT—Converter.

1—6SK7GT—I.F. Amplifier.

1—6SQ7—Detector—AVC—1st audio.

1—6V6GT—Power output.

A 6X5GT Rectifier is used.

SERVICE NOTES

Voltages taken from the different points of the circuit to the chassis are measured with volume control in maximum position, all tubes and the rectifier in their sockets, no signal applied, and with a volt meter having a resistance of 20,000 ohms per volt. These voltages are clearly shown on the voltage diagram (Fig. 7).

All voltages should be measured with an input voltage of 6.3 volts DC.

To check for open by-pass condensers, shunt each condenser with another one having the same capacity and voltage rating which is known to be good until the defective unit is located.

ALIGNING INSTRUCTION

Never attempt any adjustments on this receiver unless it becomes necessary to replace a coil or transformer, or the adjustments have been tampered with in the field. Always make certain that other circuit components, such as tubes, condensers, resistors, etc., are normal before proceeding with realignment.

If realignment is necessary follow the instructions given under the heading "ALIGNMENT PROCEDURE". After realignment has been completed repeat the procedure as a final check.

INSTRUCTIONS FOR REMOVING CHASSIS FROM THE CASE

The bottom cover (the one with the speaker louvers) can be removed to permit servicing of major components, such as tubes and vibrator, by removing the eight (8) screws holding it to the top cover. There are three (3) screws on each side, one (1) in the rear, and one (1) in the front.

CAUTION: Before attempting to remove the top cover, to service condensers, resistors, etc., the screw connecting the spark plate to the "A" terminal (inside case) must be removed. This is a round head screw, and is located on the rear of the case, close to the mounting stud bolt. It is recessed in a ½ inch hole in the case itself, thereby permitting contact with the spark plate.

After removing the spark plate screw, remove the two knobs by pulling forward and remove the eight (8) screws securing the cover to the chassis. Lift the chassis at the rear, at the same time moving it away from the front of the case so that the volume and tuning shafts will clear the holes in the cover.

NOTE: When reinstalling the chassis into the case, be sure the screw connecting the spark plate to the "A" terminal (inside case) is tightened very securely, otherwise the receiver will not operate properly.

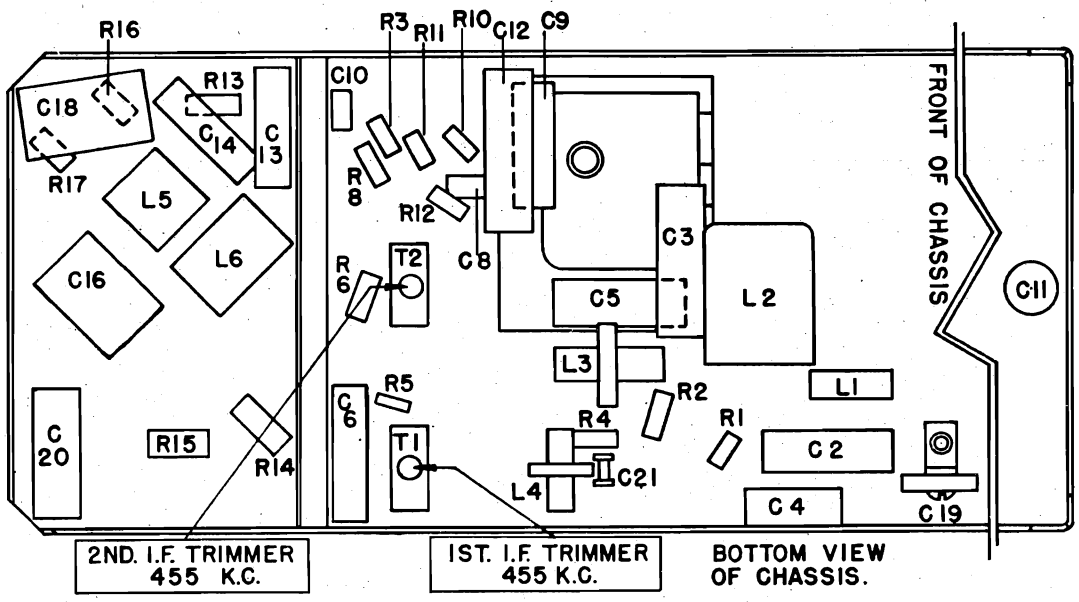

Fig. 4. Bottom View

©John F. Rider

Compliments of www.nucow.com

ALIGNMENT PROCEDURE

Volume control—Maximum, all adjustments.

No signal applied to antenna.

Power input—6.3 volts.

Connect dummy antenna in series with output lead of signal generator.

Connect output meter across voice coil.

Connect ground lead of signal generator to chassis.

Repeat alignment procedure as a final check.

The following equipment is necessary for proper alignment:

Signal generator that will provide the test frequencies as listed, modulated 400 cycles, 30%.

Non-metallic screwdriver.

Output meter. (1.8 volt for 1 watt output.)

Dummy antennas—.1 MFD., 75 MMFD.

For alignment points refer to Figures 5 and 6.

Dial Setting	Generator Frequency	Dummy Ant.	Generator Connections	Trimmer Reference	Trimmer Adjustment	Trimmer Function
Fully Open	455 KC	.1 MFD.	6SA7 Grid	T2	Maximum	Output I.F.
Fully Open	455 KC	.1 MFD.	6SA7 Grid	T1	Maximum	Input I.F.
Fully Open	1600 KC	75 MMFD.	Ant. lead	C1C	Maximum	Oscillator
Tune in signal from generator	1400 KC	75 MMFD.	Ant. lead	C1B	Maximum	R.F.
Tune in signal from generator	1400 KC	75 MMFD.	Ant. lead	C19	Maximum	Antenna

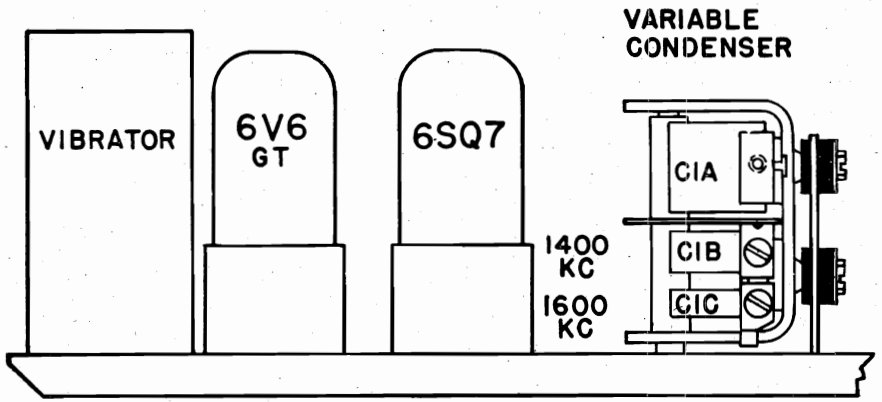

Fig. 5. Trimmer Locations

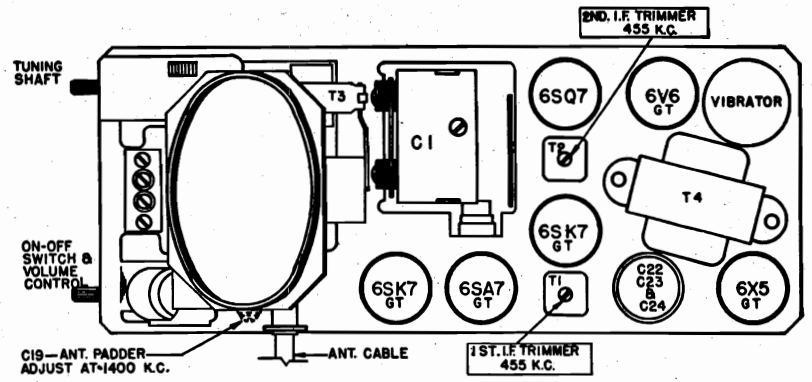

Fig. 6. Tube, Rectifier and Trimmer Locations

©John F. Rider

Compliments of www.nucow.com

MODEL 6293,
Ch. 528.6293-2

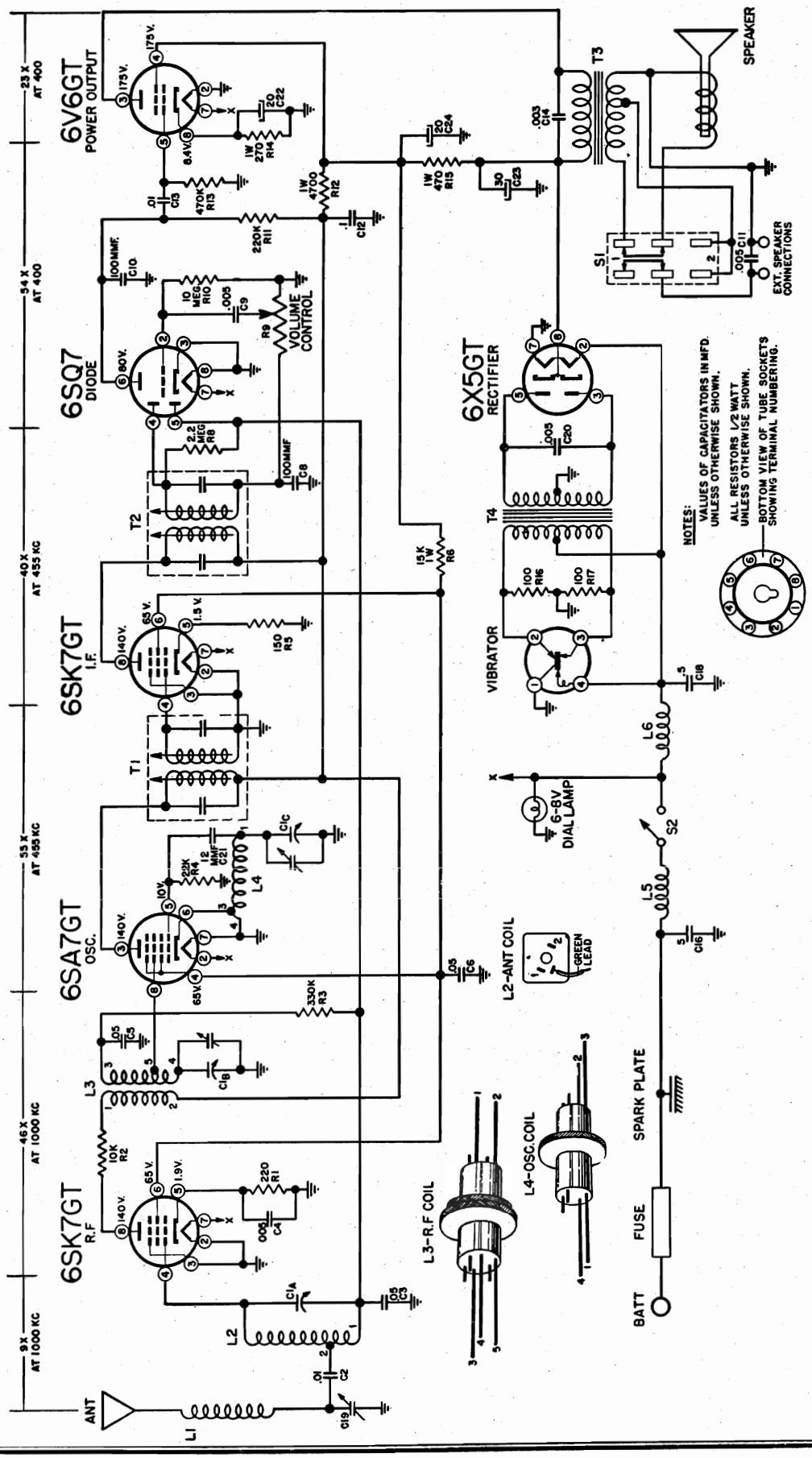

Fig. 7. Schematic Diagram

©John F. Rider

Compliments of www.nucow.com

INSTRUCTIONS FOR INSTALLATION OF REAR SEAT SPEAKER

Your Silvertone Auto Radio, Chassis No. 528.6293-2 includes a special feature which makes it simple and easy to install an additional speaker in the rear of the car. A speaker with the proper voice coil impedance (3.2 ohms) for such an installation is available at the Sears store where you bought your Silvertone Auto Radio.

The terminal strip in the illustration below is accessible through an opening in the case. The two wire leads from the rear seat speaker should be connected to these terminals. This completes the electrical installation of the speaker. The switch at the right is for operation of the rear seat speaker. In position 1, only the speaker in the case is connected; in position 2, both speakers are connected.

IMPORTANT: When there is no rear seat speaker installation, ALWAYS keep the switch in position 1.

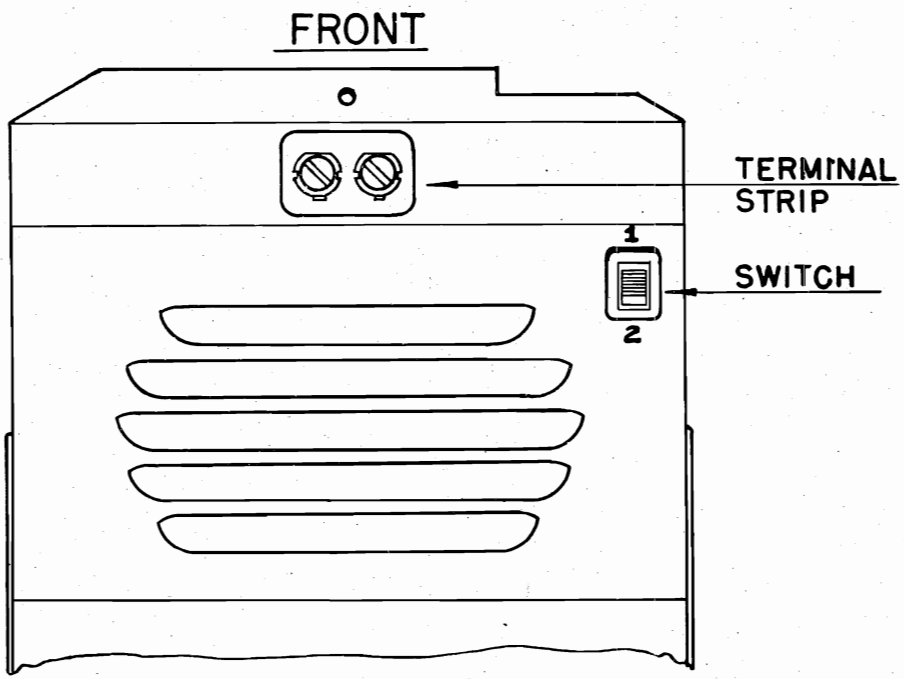

Fig. 8. Bottom View of Case

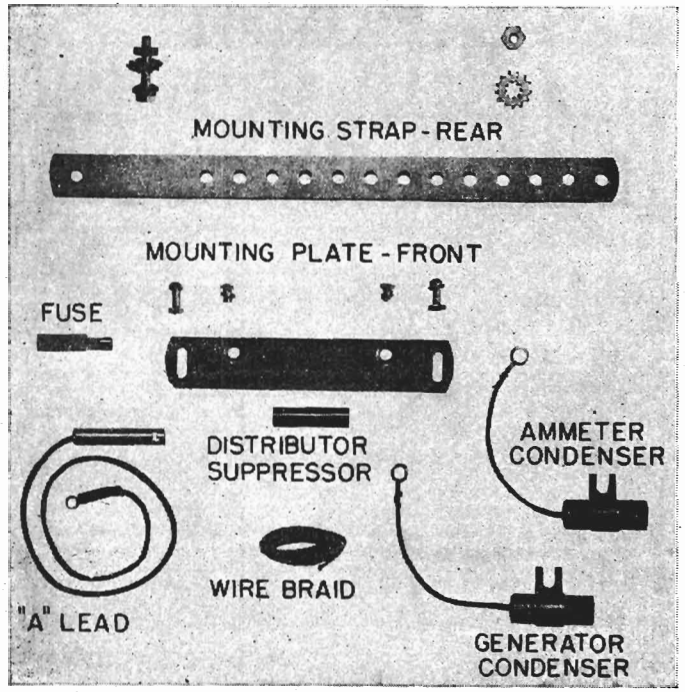

Fig. 9. Mounting Parts

©John F. Rider
Compliments of www.nucow.com

MODEL 6293,
Ch. 528.6293-2

REPAIR PARTS LIST

Schematic Location	Part No.	Description
C1A, C1B, C1C	B19-205	Capacitor—variable—worm drive
C2, C13	A16-201	Capacitor—.01 mfd.—600 v.
C3, C5, C6	A16-189	Capacitor—.05 mfd.—400 v.
C4, C9	A16-190	Capacitor—.005mfd.—600 v.
C8, C10	A15-196	Capacitor—mica—100 mmfd.
C11	A16-177	Capacitor—ceramic—.005 mfd.
C12	A16-187	Capacitor—.1 mfd.—400 v.
C14	A16-200	Capacitor—.003 mfd.—600 v.
C16	A16-184	Capacitor—.5 mfd.—100 v.
C18	A16-202	Capacitor—.5 mfd.—100 v.
C19	A20-145	Capacitor—ceramic—antenna trimmer
C20	A16-185	Capacitor—.005 mfd.—1600 v.
C21	A15-205	Capacitor—ceramic—12 MMFD. (temp. comp.)
	A18-289	Capacitor—electrolytic
C22		20 mfd.—25 v.
C23		30 mfd.—350 v.
C24		20 mfd.—350 v.
	A83-421	Clip—I.F. transformer mounting
L1	A10-527	Coil—Antenna loading
L2	B10-525	Coil—Antenna
L3	B10-535	Coil—R. F.
L4	B10-536	Coil—Oscillator
L5	A33-229	Coil—"A" line choke
L6	A33-234	Coil—Vibrator hash choke
R9, S2	A24-182	Control—ON-OFF and VOLUME, 500,000 ohm
	A51-105	Cord—Pointer travel, 17"
	B67-541	Dial—Station
	A47-112	Grommet—Speaker and variable capacitor mounting
	A47-114	Grommet—Fibre—Flexible shaft bearing
	S84-233	Kit—"A" lead assembly
	S84-192	Kit—Mounting parts
	S84-193	Kit—Suppression, assembly
	A52-294	Knob—Volume and tuning
	A89-10	Lamp—Dial—G.E. No. 422
	A31-147	Plate—Mounting, front
	A58-76	Pointer—Dial
	A87-38	Receptacle—Antenna cable
R1	A60-753	Resistor—220 ohm—½ watt
R2	A60-760	Resistor—10,000 ohm— ½ watt
R3	A60-661	Resistor—330,000 ohm—½ watt
R4	A60-744	Resistor—22,000 ohm—½ watt
R5	A60-767	Resistor—150 ohm—½ watt
R6	A60-716	Resistor—15,000 ohm—1 watt
R8	A60-726	Resistor—2.2 megohm—½ watt
R10	A60-728	Resistor—10 megohm—½ watt
R11	A60-667	Resistor—220,000 ohm—½ watt
R12	A60-765	Resistor—4700 ohm—1 watt
R13	A60-731	Resistor—470,000 ohm—½ watt
R14	A60-754	Resistor—270 ohm—1 watt
R15	A60-694	Resistor—470 ohm—1 watt
R16, R17	A60-752	Resistor—100 ohm—½ watt
	A75-74	Shaft—Pointer
	B75-73	Shaft—Tuning drive—flexible
	B79-373	Speaker—4" P.M.
	B31-134	Strap—Mounting, rear
S1	A69-185	Switch—Rear seat speaker
T1	A10-521	Transformer—I.F. No. 1
T2	A10-529	Transformer—I.F. No. 2
T3	B80-249	Transformer—Output (part of speaker)
T4	B80-243	Transformer—Power
	A34-105	Vibrator—Mallory No. 659

IMPORTANT: All tubular condensers must be high temperature (85°C.) wax type.

©John F. Rider

Compliments of www.nucow.com

MODEL 6295,
Ch. 528.6295

6"X9"OVAL SPEAKER

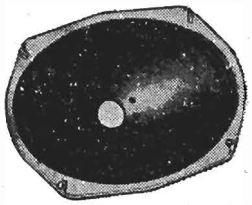

CONTROL UNIT

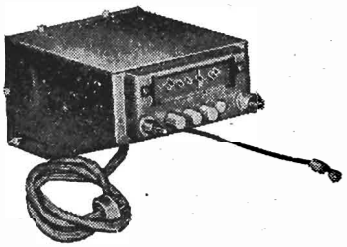

7" ROUND SPEAKER

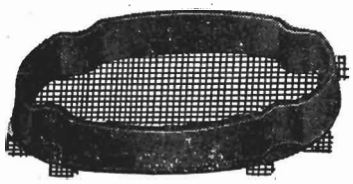

6" X 9" RUBBER BAFFLE & SCREEN

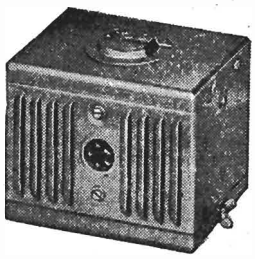

POWER UNIT

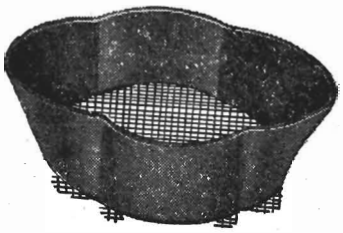

7"RUBBER BAFFLE & SCREEN

Fig. 1. Parts in Master Package

Only one of the speakers illustrated is supplied with each radio; the type of speaker you receive will be determined by the make of car for which the radio is ordered.

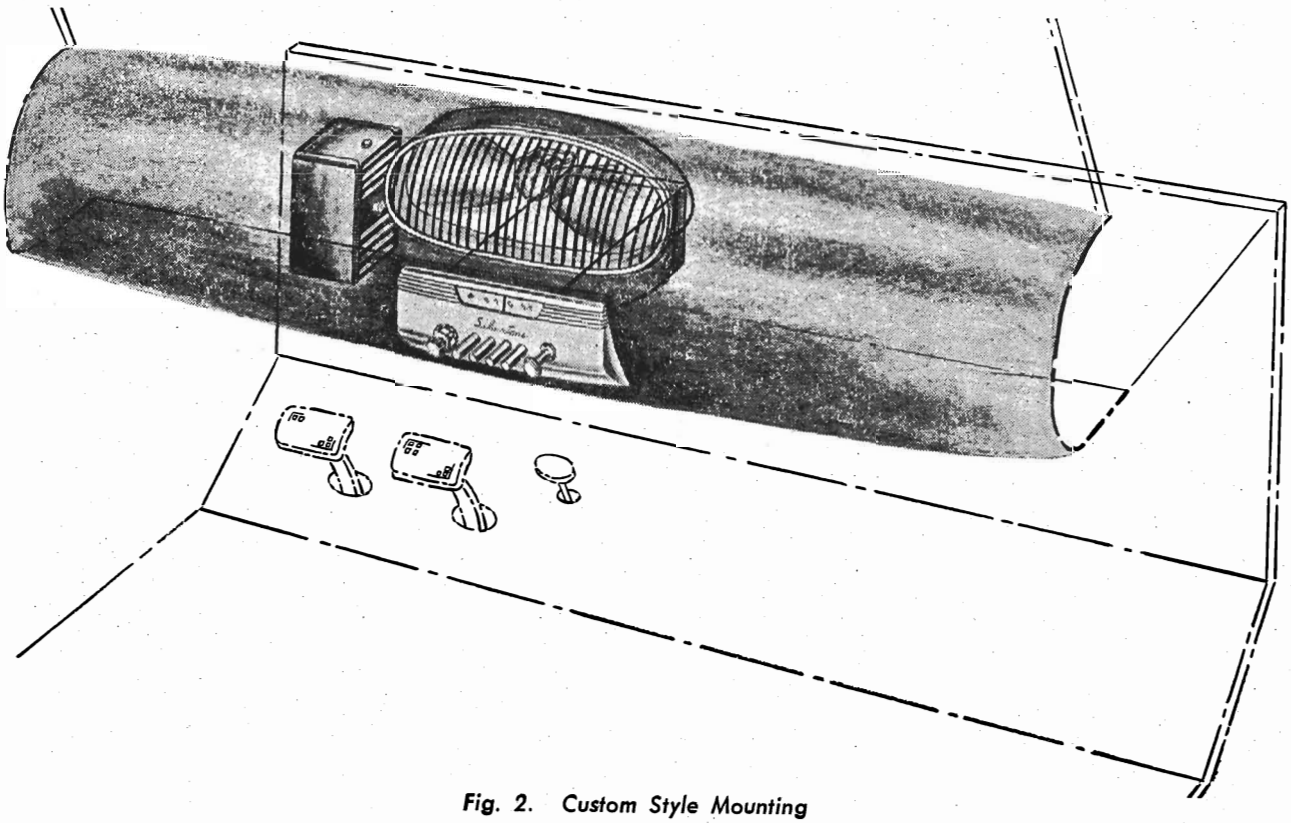

Fig. 2. Custom Style Mounting

©John F. Rider

Compliments of www.nucow.com

MODEL 6295,
Ch. 528.6295

DESCRIPTION

Your SILVERTONE radio is a newly designed DE LUXE PUSHBUTTON TUNING AUTOMOBILE RECEIVER of advance superheterodyne circuit design, for operation on the six volt storage battery in your car. It covers the frequency range from 540 KC to 1600 KC. In addition to PUSHBUTTON TUNING it features BASS-COMPENSATED VOLUME CONTROL supplemented by a MANUAL TONE CONTROL. It consists of three principal parts—the Control Unit, the Power Unit and the Speaker (See Fig. 1)—and is supplied with mounting parts to accommodate either custom installation in the instrument panel or underdash mounting. (See Figs. 2 and 3.)

Special care has been taken in the design of this receiver to insure the finest in sensitivity and selectivity, thereby insuring good reception of even distant or very weak stations. It is simple to install. The antenna input circuit is adjustable to permit the use of any two, three or four section telescopic, whip or "fishpole" type antenna.

Each complete radio, with accessories, is made up in two separate packages, one carton containing the Escutcheon Kit and speaker mounting hardware, the other carton containing the Control Unit, the Power Unit and either a 7" round speaker or a 6"x9" oval speaker, depending on the make and and model of the car for which the radio was ordered. This second carton will be stamped with the letter "A" to indicate that it contains a 7" round speaker, or the letter "B" to indicate the 6"x9" oval speaker.

Control Unit Escutcheon Kits (instrument panel matching or universal) are supplied as a separate item, thus permitting you to transfer the radio from one car to another with only the small expense of replacing the Escutcheon Kit and speaker if you desire to match the instrument panel of your new or different car. Instrument panel matching Escutcheon Kits for most popular late model cars are available at your nearest Sears retail store or Mail Order House. If your Silvertone radio is equipped with a universal underdash tuning panel it may be transferred as is to a different car without changing the Escutcheon Kit. However, if you wish to change from an underdash mounting to a custom style instrument panel mounting, this can be accomplished by discarding the universal Escutcheon Kit and replacing it with an instrument panel matching Escutcheon Kit and 6"x9" oval speaker, if necessary), as outlined above.

INSTALLATION

THE SPEAKER

The speakers (7" round or 6"x9" oval) are supplied with sponge rubber baffles for mounting on flat or curved instrument panels. The rubber baffle for the 7" round speaker has flared sides so that it will cover an oval opening in the car's speaker grill as well as a round opening.

Speaker mounting hardware is supplied with each Escutcheon Kit for mounting the speaker in your car. This includes a "U-shaped" bracket for mounting the round speaker in cars on which it is not possible to mount the speaker on existing bolts.

SPECIFIC INSTRUCTIONS PERTAINING TO THE MOUNTING OF THE SPEAKER AND CONTROL UNIT IN THE CAR FOR WHICH YOU ORDERED YOUR RADIO ARE CONTAINED IN THE LEAFLET PACKED IN THE ESCUTCHEON KIT.

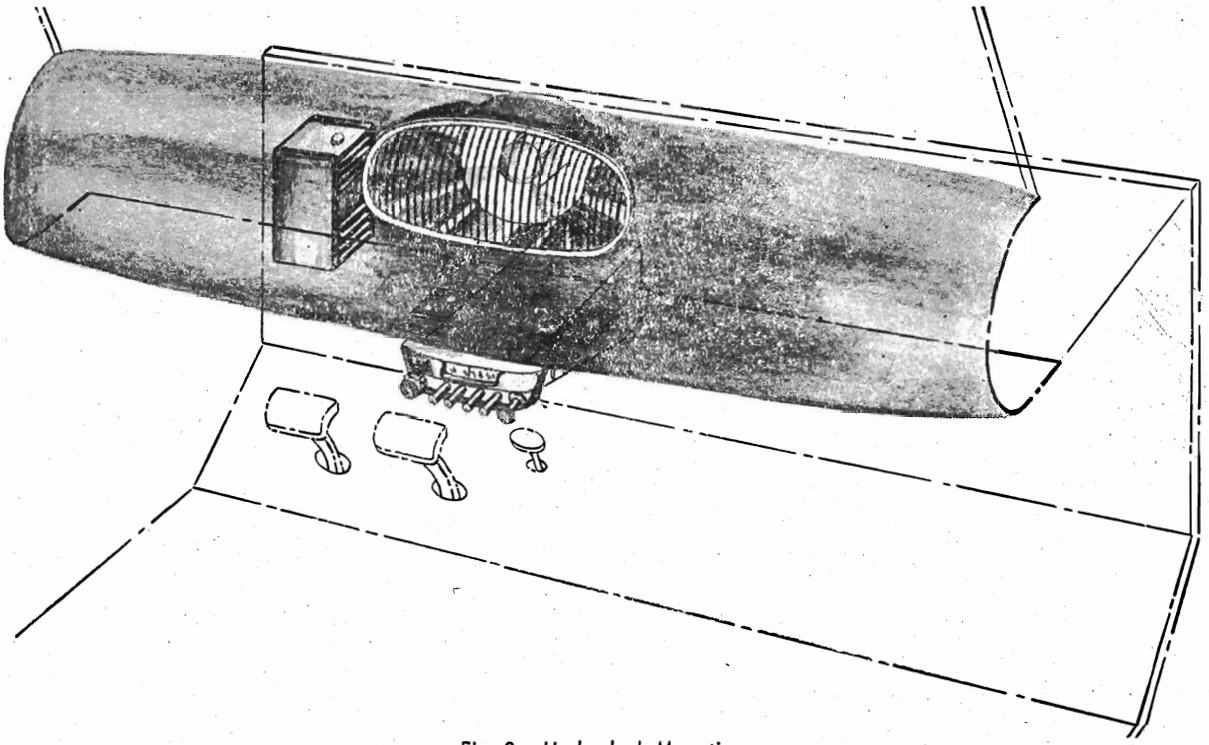

Fig. 3. Underdash Mounting

©John F. Rider

Compliments of www.nucow.com

MODEL 6295,
Ch. 528.6295

MOUNTING THE POWER UNIT

The power unit mounts on the firewall (see Fig. 3). Determine a suitable position for mounting it by holding the case in your hands against the firewall. When a suitable position has been determined, then check the underhood side of the wall, to make sure there is no obstruction to prevent drilling a hole and inserting the mounting bolt. Having located a suitable position that will permit drilling, mark and drill a 5/16" hole. Insert the 1/4 inch diameter by 3 inch long, carriage type mounting bolt into the hole from the underdash side and attach the lockwasher and nut on the underhood side, but do not tighten. Now holding the case in a vertical position (with wingnut on the bottom), bring the case up to the bolt and slide the channel in the mounting plate down over the head of the bolt. The lockwasher and nut on the underhood side should then be tightened down securely.

If, because of limited space, you find it necessary to mount the power unit in a horizontal or angle position, this type of mounting is entirely satisfactory and has no ill effect on the operation of the radio.

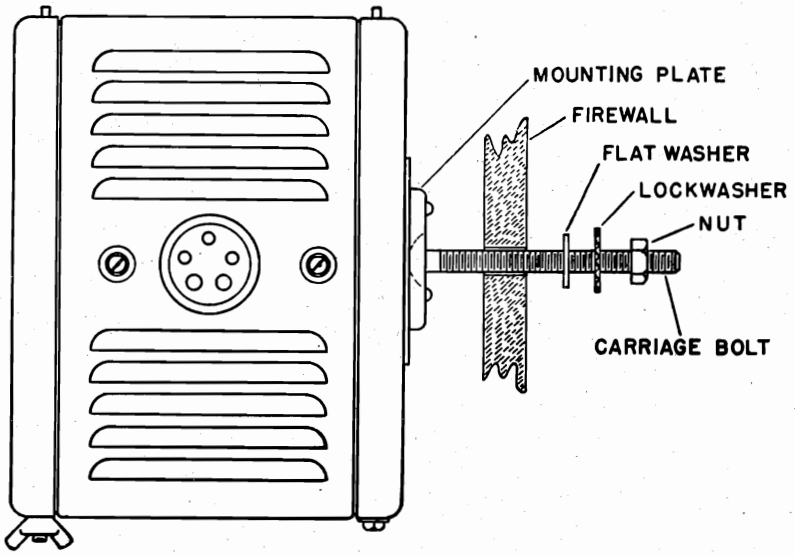

Fig. 3. Power Unit Mounting

CONNECTING THE RADIO

The antenna cable should be connected to the radio by inserting the plug into the antenna receptacle on the side of the control unit (see Fig. 4). Plug the speaker and power cables into the sockets provided on the sides of the Power Unit. Connect the "A" lead to the battery side of the ammeter behind the instrument panel. The fuse should then be inserted into the holder in the "A' lead. These connections are illustrated in Fig. 4.

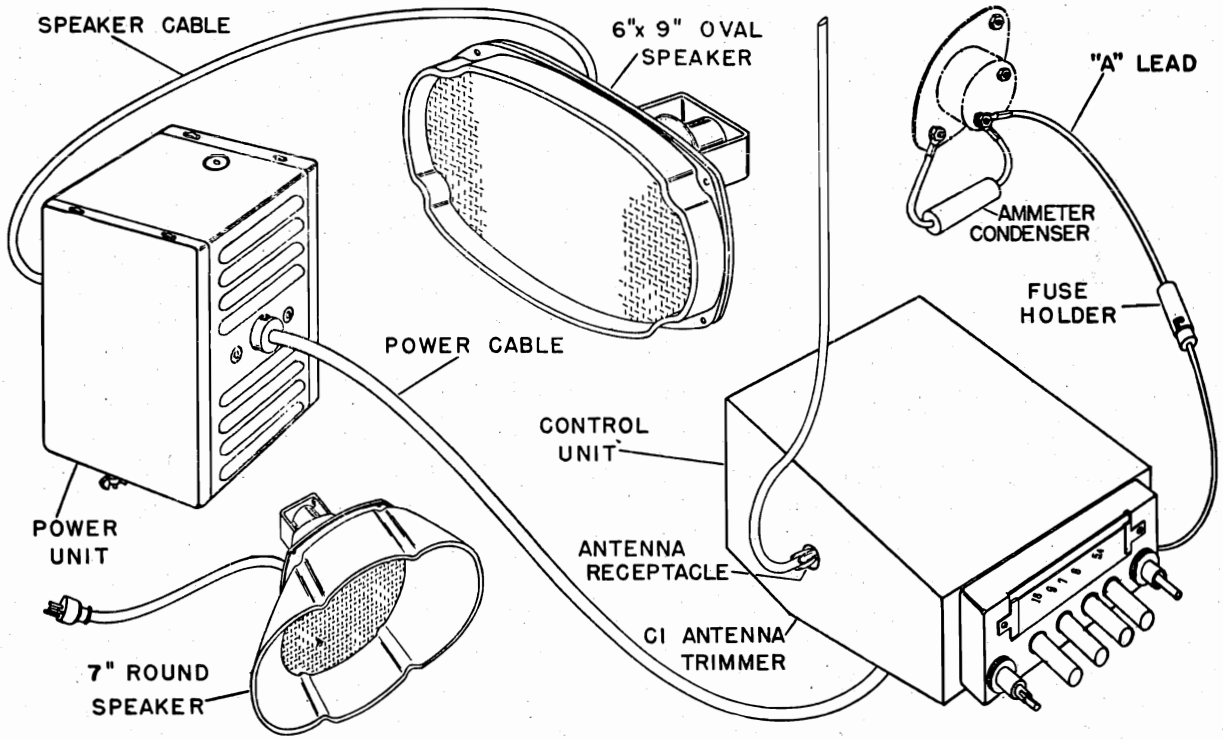

Fig. 4. Connecting the Radio

©John F. Rider

Compliments of www.nucow.com

MODEL 6295,
Ch. 528.6295

CONTROLS

There are six operating controls on the front of the Control Unit, (see Fig. 5). The two outside knobs are dual purpose controls, the other four are PUSHBUTTON STATION SELECTORS. The left-hand control consists of two knobs mounted on concentric shafts; the front knob (round) is the ON-OFF-SWITCH and VOLUME CONTROL; the rear knob (with four points) is the MANUAL TONE CONTROL. The knob on the right is the MANUAL TUNING CONTROL and it also serves as a fifth PUSHBUTTON STATION SELECTOR. The use of these controls is explained below.

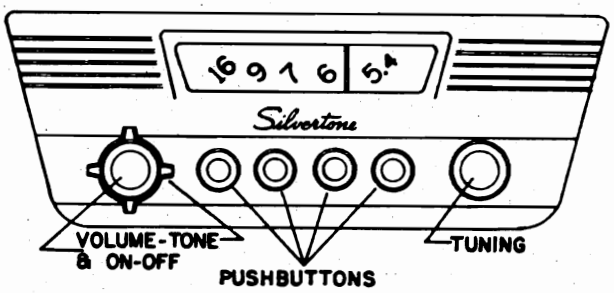

Fig. 5. Control Unit Panel

THE ON-OFF-SWITCH AND VOLUME CONTROL

When the outer left knob is turned all the way to the left the receiver is switched off and there is no drain from the car's battery. Rotating the knob part of a turn toward the right switches the receiver on and illuminates the dial. Further rotation of the knob increases the volume. After a station has been tuned in properly the volume control knob should be adjusted to give the desired volume.

MANUAL TUNING

Use the right-hand knob to tune in stations manually. To select a station, push in the knob and tune the radio by turning the knob until the desired station is heard. The dial pointer will indicate the frequency to which you are tuned.

The dial is marked in Kilocycles minus the final two zeroes. Always tune carefully for the clearest sound and minimum background noise.

PUSHBUTTON TUNING

Adjusting the pushbutton station selectors is simple and quick. No tools are required and a button may be set up for a new station in a few seconds. Each button can be tuned to any station in the broadcast band; thus you can arrange the tuning in any order to suit your convenience.

Before making the following adjustments, turn the radio on and let it warm up for 15 minutes.

Choose the PUSHBUTTON STATION SELECTOR you wish to adjust, and push the button all the way in; it will lock in this position. Now tune in the station to which you wish to pre-tune by turning the button to right or left until the desired station is heard. The dial pointer will indicate the frequency to which you are tuned, but to insure the accuracy of the setting, keep the volume control turned low and adjust the button for sharpest tuning. This will be indicated when the sound is clearest and noise at a minimum. The button is now properly adjusted and should not be turned again until it is desired to set it for a different station.

Follow the above procedure to adjust the remaining PUSHBUTTON STATION SELECTORS.

As was mentioned under the heading *CONTROLS*, the MANUAL TUNING CONTROL has been designed to serve as a fifth PUSHBUTTON STATION SELECTOR. If you wish to use this control as a PUSHBUTTON STATION SELEC-

S84--382 SUPPRESSION KIT AND MISCELLANEOUS PARTS

1 S84-233—"A" lead assembly
1 A43-10—Fuse
1 A81-13—Sleeve (for fuse)
2 A16-183—.5 MFD condensers
1 A96-4—Distributor Suppressor
20" wire braid
1 bolt—1/4" diameter by 3" long
1 lockwasher
1 flat washer
1 nut

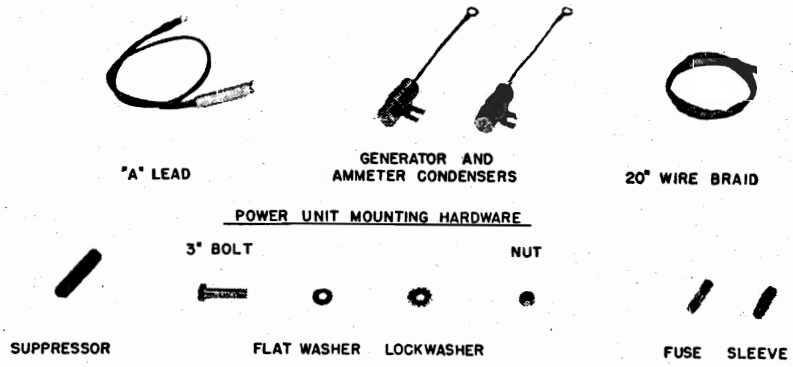

Fig. 6. Suppression Kit and Miscellaneous Parts

©John F. Rider

Compliments of www.nucow.com

MODEL 6295,
Ch. 528.6295

TOR, simply follow the procedure given above for adjusting the other PUSHBUTTON STATION SELECTORS. However, remember that if you use this control for MANUAL TUNING at any time, it will have to be re-set to the desired station if you wish to use it again as a PUSHBUTTON STATION SELECTOR.

THE TONE CONTROL

The inner left knob (with four points) is the TONE CONTROL, which permits you to select the most pleasing tonal range. When it is turned all the way to the right (clockwise) the tone is treble or brilliant. This position is best for the most distinct reproduction, especially of speech. Turning the knob to the left (counterclockwise) makes the tone more mellow. This is often desirable for certain types of music and is also useful to lessen the effects of static and electrical noise. Turn the knob to the position that gives the tone most pleasing to you.

MATCHING THE ANTENNA

An adjusting screw for matching the receiver to the particular antenna used is accessible through a hole in the bottom side of the Control Unit. (See Fig. 4.) Set the dial pointer between 1400 KC and 1500 KC, where no station is heard with the volume control fully on. Then use a small screw driver to turn the adjusting screw to the point giving the most hiss or noise. The set is now ready for operation.

ELIMINATING MOTOR NOISE

Every precaution was taken in the design of this radio to eliminate motor noise interference. However, in the remote instance that it may be found desirable to take further steps, the following notes are added for your guidance.

IMPORTANT: Special care should be taken when mounting the radio to make sure all paint, grease, rust, etc., is removed from all mounting points. A good electrical contact at these points will aid materially in eliminating motor noise.

GENERATOR CONDENSER

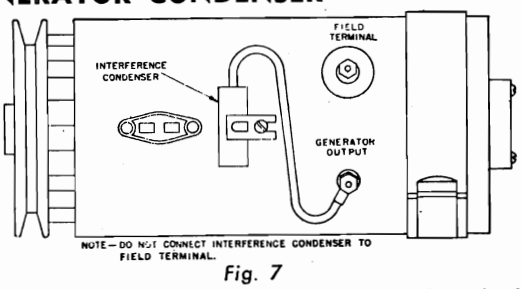

Fig. 7

The generator condenser must be connected to the battery terminal of the generator in all cases. If your car is equipped with a generator using an automatic regulator, make sure the condenser IS NOT fastened to the field winding terminal. If in doubt, your local car dealer can advise you as to where the car manufacturer recommends connecting it.

DISTRIBUTOR SUPPRESSOR

Remove from distributor cap the high tension lead from coil to distributor. Cut the lead two inches from the end, and screw the distributor resistor on to the coil lead, then screw the short length into the resistor and plug the cable into the distributor cap.

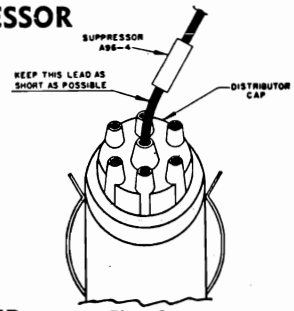

Fig. 8

AMMETER CONDENSER

A .5 MFD bypass condenser is furnished for attaching to the ammeter. This should be connected to either side of the ammeter with the ground lug fastened to a good ground nearby. In most case the use of this condenser, the distributor suppressor, and the generator condenser, will eliminate all objectionable ignition interference.

ELECTRICAL ACCESSORIES

In some cases, it may be found that car accessories such as electric heaters, lighters, automatic relays, or gauges, may cause interference while in operation. Proper procedure in such cases is to try another by-pass condenser from ground to the suspected accessory until the source of the interference is found. The condenser then should be permanently mounted in this location.

HIGH AND LOW TENSION LEADS

In many cases the low tension battery leads, etc., are grouped together with the high tension wires. These leads will very often pick up motor noise and feed it into the receiver through the battery circuit. In cases such as these it will be necessary to separate the low tension from the high tension wires and run them through another hole if they run from the engine compartment up to the instrument panel. This condition is particularly true on the V-8 Ford, as the battery and primary leads run through a special tube which also houses the high tension leads. Shield and ground these leads.

IGNITION COILS

In cars where the ignition coil is located on the back side of the instrument panel it is often necessary to use an additional condenser. It must be installed from the battery side of the ignition coil to the closest ground on the instrument panel.

Short leads are very important. Where coils are mounted either on the instrument panel or in the driver's compartment, it may be necessary to shield the high tension lead from the coil to the distributor.

WHEEL STATIC

Wheel Static is a form of interference caused by the rotation of the front wheels of the car, and it is, of course, only noticed when the car is in motion. If this form of interference is present it can be eliminated by installing wheel static collector springs between the inner hub cap and the spindle shaft.

BONDING OF STEERING COLUMN TO BODY

Bonding the steering column to the fire wall with a short braid may also be effective. Clean the paint from the steering column at the fire wall where the column enters the motor compartment, and solder on a short piece of braid. Ground the end of the braid to the fire wall.

In some cases it may be necessary to ground the tubes and rods coming through the fire wall in order to reduce the interference. Clean them with emery cloth and spot-solder the braid, fastening the end under a convenient screw. A 1/4" piece of wire braid 20 inches long is furnished in the suppression kit assembly for this purpose.

©John F. Rider

Compliments of www.nucow.com

MODEL 6295,
Ch. 528.6295

ELECTRICAL SPECIFICATIONS

Power Supply.....6.3 volts DC
Current.....6.5 amp. average
Frequency Range.....540 to 1600 KC
I. F. Frequency.....262 KC
Speaker.....7" round or 6"x9" oval
Power Output.....3 watts, undistorted
5.5 watts, maximum
Sensitivity.....3 microvolt average for 1 watt output
Selectivity...40 KC broad at 1000 times signal, at 1000 KC

The set contains the following:

1—6BA6—R. F. Amplifier.
1—6BE6—Converter.
1—6BA6—I. F. Amplifier.
1—6AT6—Detector—AVC—1st audio.
1—6V6GT—Power output.

1—6X5GT—Rectifier.

SERVICE NOTES

Voltages taken from the different points of the circuit to chassis are measured with the volume and tone controls in maximum position, all tubes and the rectifier in their sockets, no signal applied, and with a voltmeter having a resistance of 20,000 ohm per volt. These voltages are clearly shown on the schematic diagram (Figs. 11 and 12). All voltages should be measured with an input voltage of 6.3 volts DC.

The tubes and rectifier are accessible for servicing without removing the chassis. Loosen the wing-nut on the cover of the power supply case and lift off the cover. On the RF Tuning Unit, loosen the wing nuts on the two stud bolts protruding from the side of the case at the top, rear, and remove the plate over the tubes. CAUTION: Be sure to replace the tubes and the rectifier in the proper sockets. Refer to Tube and Rectifier Location Pictorials, Fig. 10 and 14.

WARNING: The dash pot (brass cylinder on the mechanical tuner) should never be oiled. If it is ever necessary to make adjustments on the mechanical tuner, the dash pot may be cleaned with ordinary cleaning solvents.

ALIGNING INSTRUCTIONS

Never attempt any adjustments on this receiver unless it becomes necessary to replace the coils or transformer, or the adjustments have been tampered with in the field. Always make certain that other circuit components, such as tubes, the rectifier, condensers, resistors, etc., are normal before proceeding with realignment.

If realignment is necessary follow the instructions given under the heading "ALIGNMENT PROCEDURE." After realignment has been completed repeat the procedure as a final check.

INSTRUCTIONS FOR REMOVING THE CHASSIS FROM THE CASE

RF TUNING UNIT: Remove the knobs and nuts from the two control shafts. Take out the six self-tapping screws around the back edge of the case and remove the back cover. Remove the plate over the tubes (see service notes). Loosen the screw securing the cable clamp, slip the cable out from under the clamp and out of the notch. Remove the lead from the plug-in terminal on the spark plate attached to the inside top of case. Slide the "A" lead out of the notch. Now tilt the front of the case up so that the chassis can slide out. Grasp the chassis at the rear with the fingers against the chassis plate and with the thumb hooked over the IF transformer. Pull the chassis straight back, being careful that the pointer bracket does not get caught against the spark plate components. Handle the chassis carefully and set down gently so that the mechanical tuning parts may not be damaged or the settings of the coil cores upset by jarring.

POWER SUPPLY: Loosen the wing-nut and lift the top cover off. Remove the 6-32x1/2 screw securing the high voltage cable socket to the case. Remove the four screws (one on each side) near the bottom outside of the case. Now take the case in one hand and grasp the output transformer with the other hand and lift the chassis straight up.

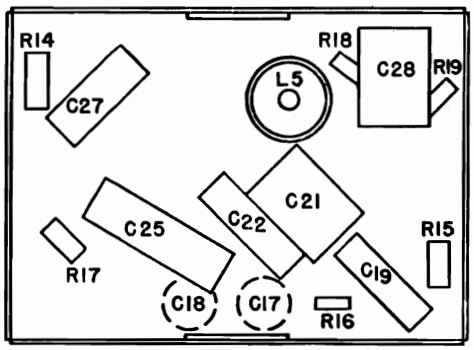

Fig. 9. Power Unit—Bottom View

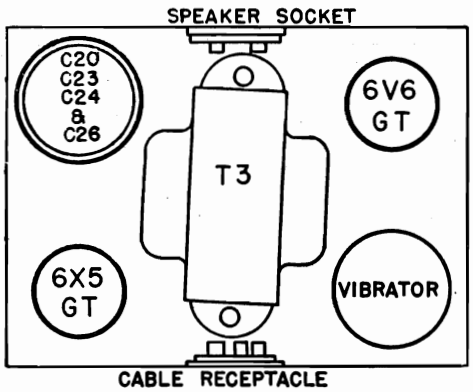

Fig. 10. Power Unit—Top View

©John F. Rider

Compliments of www.nucow.com

MODEL 6295,
Ch. 528.6295

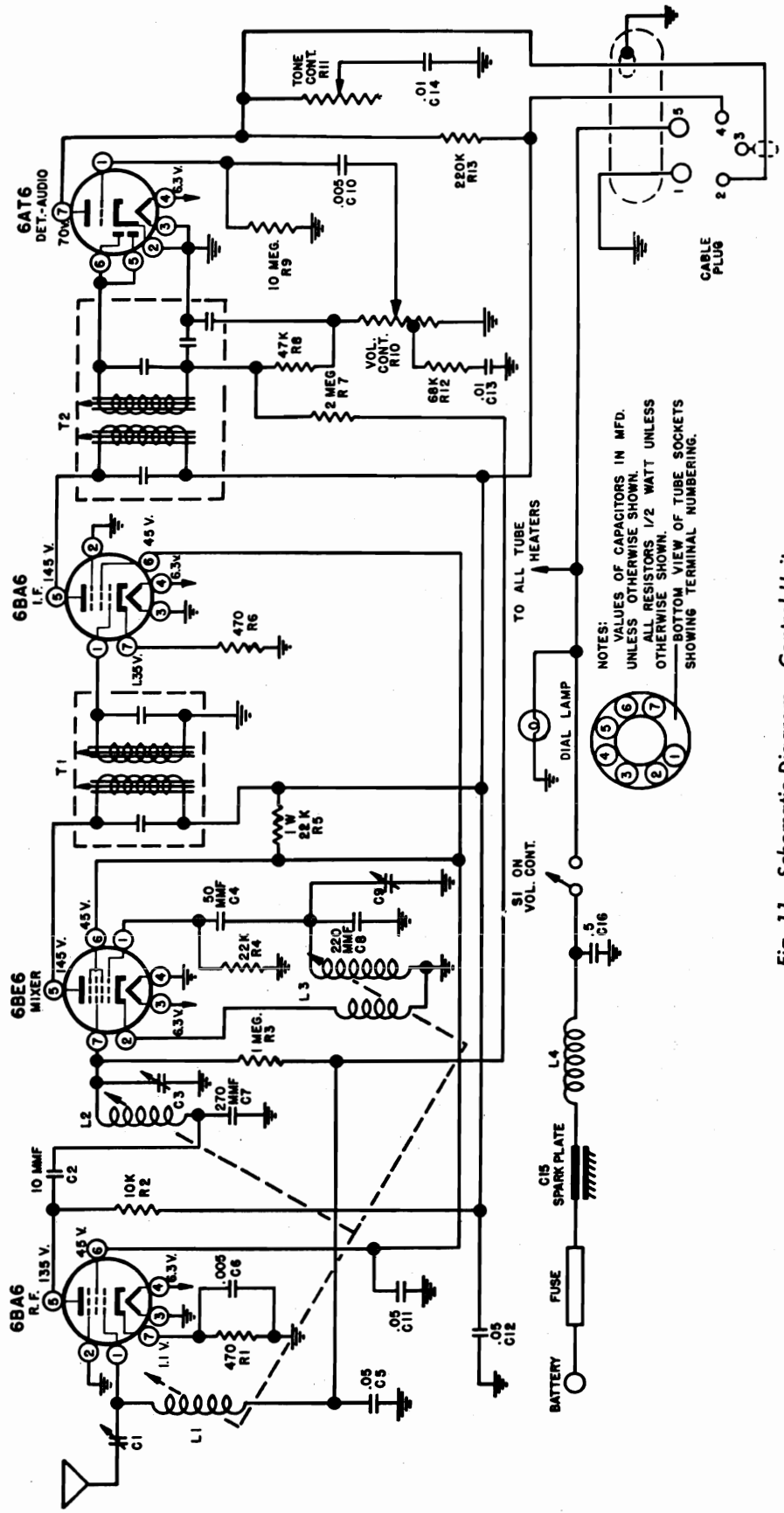

Fig. 11. Schematic Diagram—Control Unit

©John F. Rider

Compliments of www.nucow.com

MODEL 6295,
Ch. 528.6295

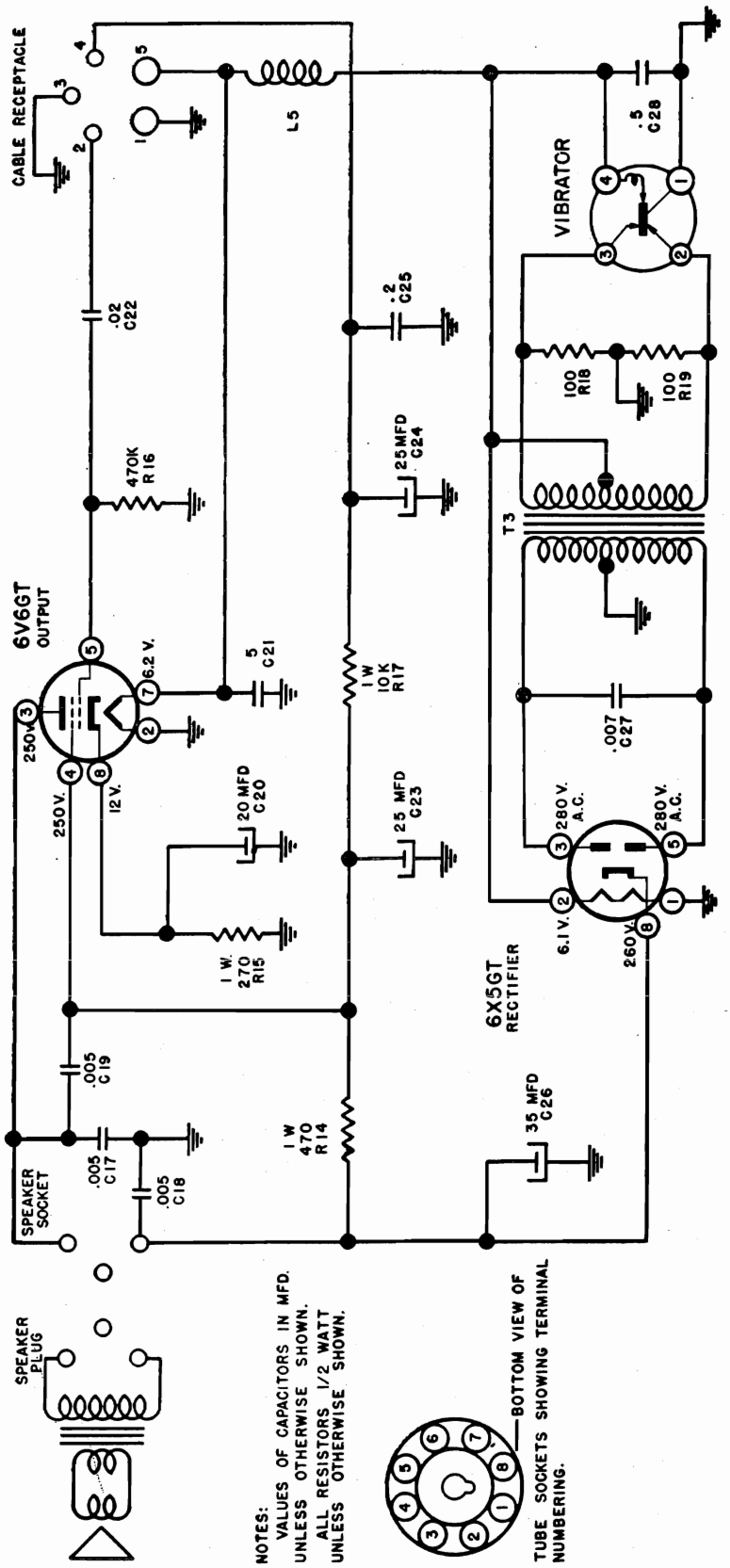

Fig. 12. Schematic Diagram—Power Unit

©John F. Rider

Compliments of www.nucow.com

ALIGNMENT PROCEDURE

Volume control—Maximum, all adjustments.

No signal applied to antenna.

Power input—6.3 volts.

Connect dummy antenna in series with output lead of signal generator.

Connect output meter across voice coil.

Connect ground lead of signal generator to chassis.

Repeat alignment procedure as a final check.

The following equipment is necessary for proper alignment:

Signal generator that will provide the test frequencies as listed, modulated 400 cycles, 30%.

Non-metallic screwdriver.

Output meter. (1.8 volt for 1 watt output.)

Dummy antennas—.1 MFD., 75 MMFD., 30 MMFD.

For alignment points refer to Figures 13 and 14.

Slug Position	Generator Frequency	Dummy Ant.	Generator Connections	Trimmer Reference	Trimmer Adjustment	Trimmer Function
Fully Out	262 KC	.1 MFD.	6BE6 Grid	T2	Maximum	Output I.F.
Fully Out	262 KC	.1 MFD.	6BE6 Grid	T1	Maximum	Input I.F.
Fully Out	1610 KC	*	Ant. lead	C9	Maximum	Oscillator
Tune in signal from generator	1400 KC	*	Ant. lead	C3	Maximum	R.F.
Tune in signal from generator	1400 KC	*	Ant. lead	C1	Maximum	Antenna

*30 MMFD across input terminals and 75 MMFD in series with "hot" side of signal generator leads.

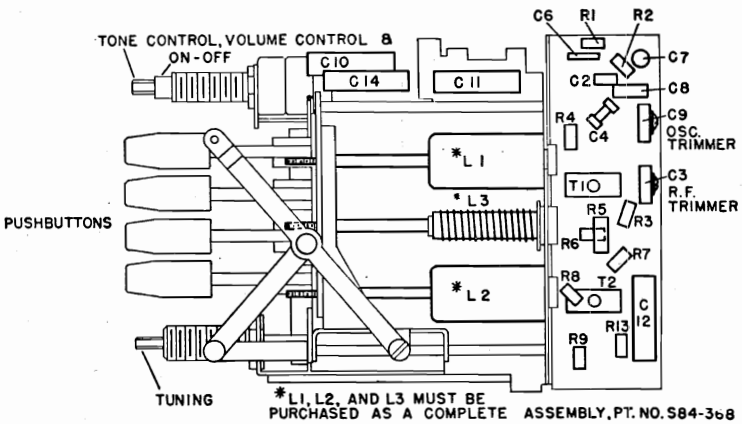

Fig. 13. Control Unit—Bottom View

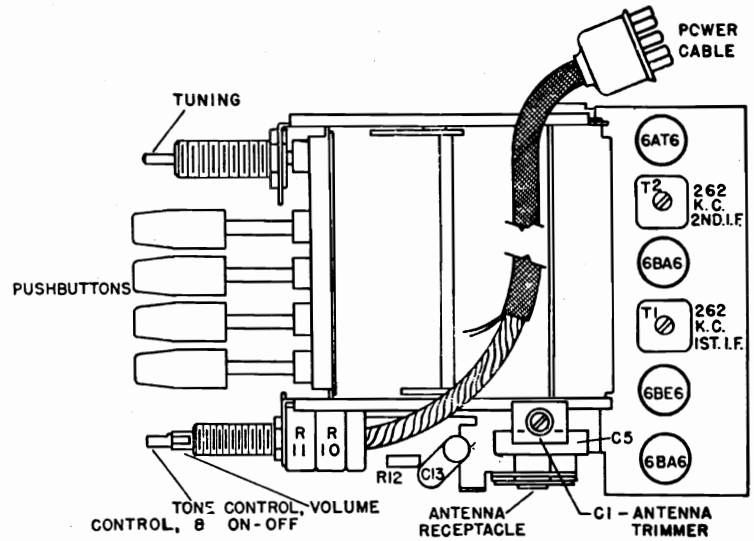

Fig. 14. Control Unit—Top View

©John F. Rider
Compliments of www.nucow.com

MODEL 6295, Ch. 528.6295

Schematic Location	Part No.	Description
C1	A20-148	Capacitor—antenna trimmer
C2	A15-197	Capacitor—ceramic—10 mmfd.
C3, C9	A20-147	Capacitor—dual trimmer—R.F. and Oscillator
C4	A15-194	Capacitor—ceramic—50 mmfd.
C5	A16-197	Capacitor—.05 mfd.—200 v.
C6, C17, C18	A16-177	Capacitor—ceramic—.005 mfd.
C7	A15-215	Capacitor—ceramic—270 mmfd.
C8	A15-218	Capacitor—silver mica—220 mmfd.
C10, C19	A16-190	Capacitor—.005 mfd.—600 v.
C11, C12	A16-189	Capacitor—.05 mfd.—400 v.
C13, C14	A16-192	Capacitor—.01 mfd.—400 v.
C15		Capacitor—spark plate
C16, C21, C28	A16-184	Capacitor—.5 mfd.—100 v.
	A18-294	Capacitor—electrolytic
C20		20 mfd.—25 v.
C23, C24		25 mfd.—350 v.
C26		35 mfd.—400 v.
C22	A16-206	Capacitor—.02 mfd.—600 v.
C25	A16-188	Capacitor—.2 mfd.—400 v.
C27	A16-207	Capacitor—.007 mfd.—1600 v.—oil filled
	B23-157	Cable—power
L1, L2, L3	S84-368	Coil—assembly—including carriage and slugs, etc.
L4	A33-229	Coil—"A" line choke
L5	A33-228	Coil—vibrator hash choke
	A83-421	Clip—I.F. transformer mounting
R10, R11, S1	A24-183	Control—dual—ON-OFF-VOLUME and TONE
	B67-547	Dial scale
	A43-10	Fuse—15 amp.—3AG
	A47-115	Grommet—rubber—power cable
	S84-233	Kit—"A" lead assembly
	B52-296	Knob—Tuning
	B52-297	Knob—Volume
	B52-298	Knob—Tone
	A89-7	Lamp—pilot—No. 47 Bayonet
R1, R6	A60-770	Resistor—470 ohm—½ watt
R2	A60-760	Resistor—10K ohm—½ watt
R3	A60-668	Resistor—1 megohm—½ watt
R4	A60-744	Resistor—22K ohm—½ watt
R5	A60-773	Resistor—22K ohm—1 watt
R7	A60-726	Resistor—2.2 megohm—½ watt
R8	A60-730	Resistor—47K ohm—½ watt
R9	A60-728	Resistor—10 megohm—½ watt
R12	A60-775	Resistor—68K ohm—½ watt
R13	A60-672	Resistor—220K ohm—½ watt
R14	A60-694	Resistor—470 ohm—1 watt
R15	A60-754	Resistor—270 ohm—1 watt
R16	A60-731	Resistor—470K ohm—½ watt
R17	A60-698	Resistor—10K ohm—1 watt
R18, R19	A60-752	Resistor—100 ohm—½ watt
	A83-646	Retainer—dial scale—left
	A83-647	Retainer—dial scale—right
	C79-375	*Speaker—7" round
	C79-376	*Speaker—6"x9" oval
	S84-383	Transformer—output—with cable and plug
T1	A10-537	Transformer—I.F. No. 1
T2	A10-540	Transformer—I.F. No. 2
T3	C80-250	Transformer—power
	A34-105	Vibrator—Mallory No. 659

*When ordering a replacement speaker, order the same type, 7" round or 6"x9" oval, as the old one that was installed in your car.

Mechanical Tuner Parts

A56-141	Pusher nut—manual tuning
A56-142	Pusher nut—pushbutton tuning
A75-75	Pusher rod—manual tuning
S84-355	Pushbutton and rod assembly

IMPORTANT: All tubular condensers must be high temperature (85°C.) wax type.

©John F. Rider

Compliments of www.nucow.com

MODEL 6295-1,
Ch. 528.6295-1

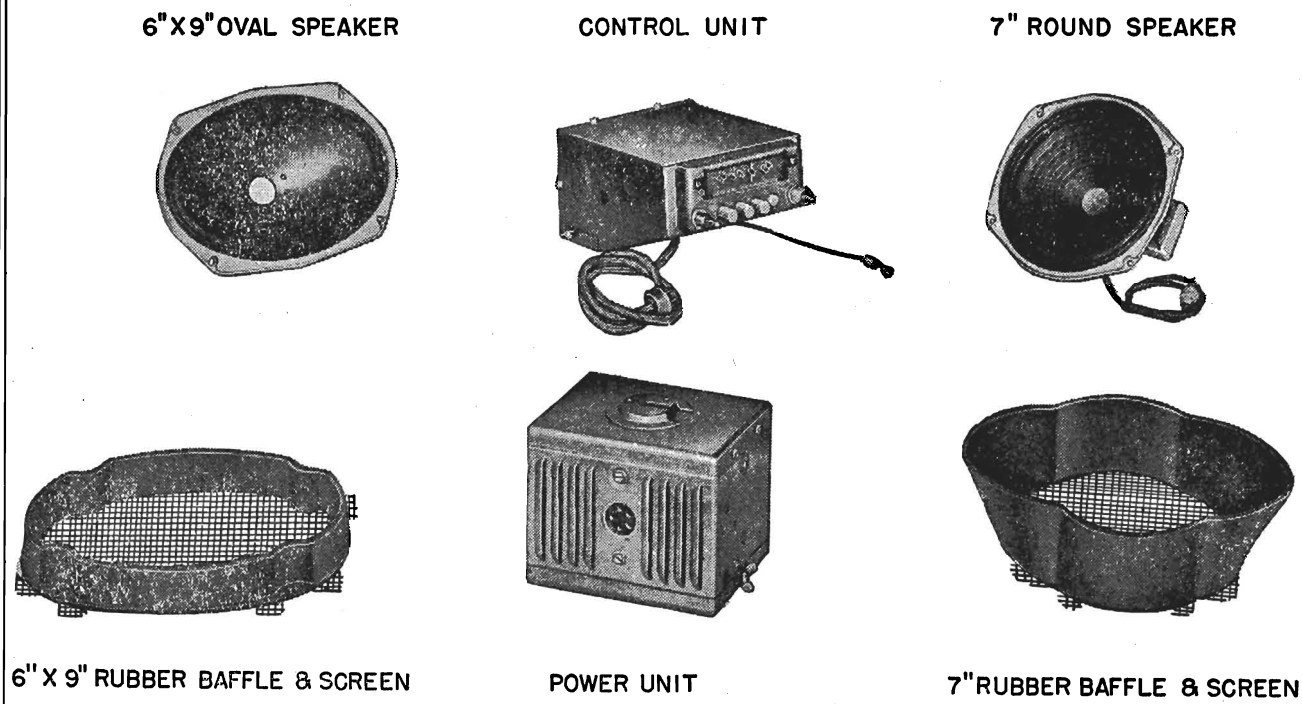

Fig. 1. Parts in Master Package

Only one of the speakers illustrated is supplied with each radio; the type of speaker you receive will be determined by the make of car for which the radio is ordered.

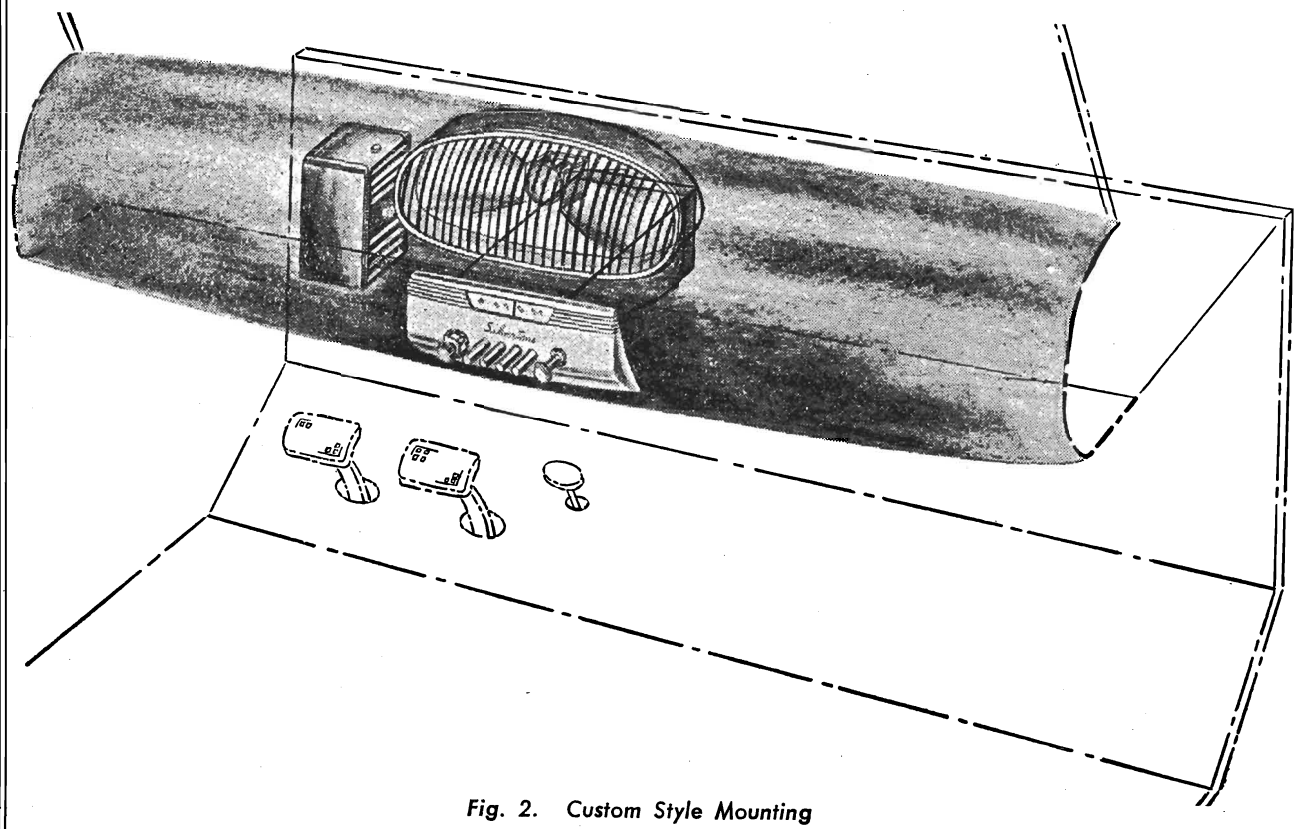

Fig. 2. Custom Style Mounting

©John F. Rider

Compliments of www.nucow.com

MODEL 6295-1,
Ch. 528.6295-1

DESCRIPTION

Your SILVERTONE radio is a newly designed DE LUXE PUSHBUTTON TUNING AUTOMOBILE RECEIVER of advance superheterodyne circuit design, for operation on the six volt storage battery in your car. It covers the frequency range from 540 KC to 1600 KC. In addition to PUSHBUTTON TUNING it features BASS-COMPENSATED VOLUME CONTROL supplemented by a MANUAL TONE CONTROL. It consists of three principal parts—the Control Unit, the Power Unit and the Speaker (See Fig. 1)—and is supplied with mounting parts to accommodate either custom installation in the instrument panel or underdash mounting. (See Figs. 2 and 3.)

Special care has been taken in the design of this receiver to insure the finest in sensitivity and selectivity, thereby insuring good reception of even distant or very weak stations. It is simple to install. The antenna input circuit is adjustable to permit the use of any two, three or four section telescopic, whip or "fishpole" type antenna.

Each complete radio, with accessories, is made up in two separate packages, one carton containing the Escutcheon Kit and speaker mounting hardware, the other carton containing the Control Unit, the Power Unit and either a 7" round speaker or a 6"x9" oval speaker, depending on the make and and model of the car for which the radio was ordered. This second carton will be stamped with the letter "A" to indicate that it contains a 7" round speaker, or the letter "B" to indicate the 6"x9" oval speaker.

Control Unit Escutcheon Kits (instrument panel matching or universal) are supplied as a separate item, thus permitting you to transfer the radio from one car to another with only the small expense of replacing the Escutcheon Kit and speaker if you desire to match the instrument panel of your new or different car. Instrument panel matching Escutcheon Kits for most popular late model cars are available at your nearest Sears retail store or Mail Order House. If your Silvertone radio is equipped with a universal underdash tuning panel it may be transferred as is to a different car without changing the Escutcheon Kit. However, if you wish to change from an underdash mounting to a custom style instrument panel mounting, this can be accomplished by discarding the universal Escutcheon Kit and replacing it with an instrument panel matching Escutcheon Kit (and 6"x9" oval speaker, if necessary), as outlined above.

INSTALLATION

THE SPEAKER

The speakers (7" round or 6"x9" oval) are supplied with sponge rubber baffles for mounting on flat or curved instrument panels. The rubber baffle for the 7" round speaker has flared sides so that it will cover an oval opening in the car's speaker grill as well as a round opening.

Speaker mounting hardware is supplied with each Escutcheon Kit for mounting the speaker in your car. This includes a "U-shaped" bracket for mounting the round speaker in cars on which it is not possible to mount the speaker on existing bolts.

SPECIFIC INSTRUCTIONS PERTAINING TO THE MOUNTING OF THE SPEAKER AND CONTROL UNIT IN THE CAR FOR WHICH YOU ORDERED YOUR RADIO ARE CONTAINED IN THE LEAFLET PACKED IN THE ESCUTCHEON KIT.

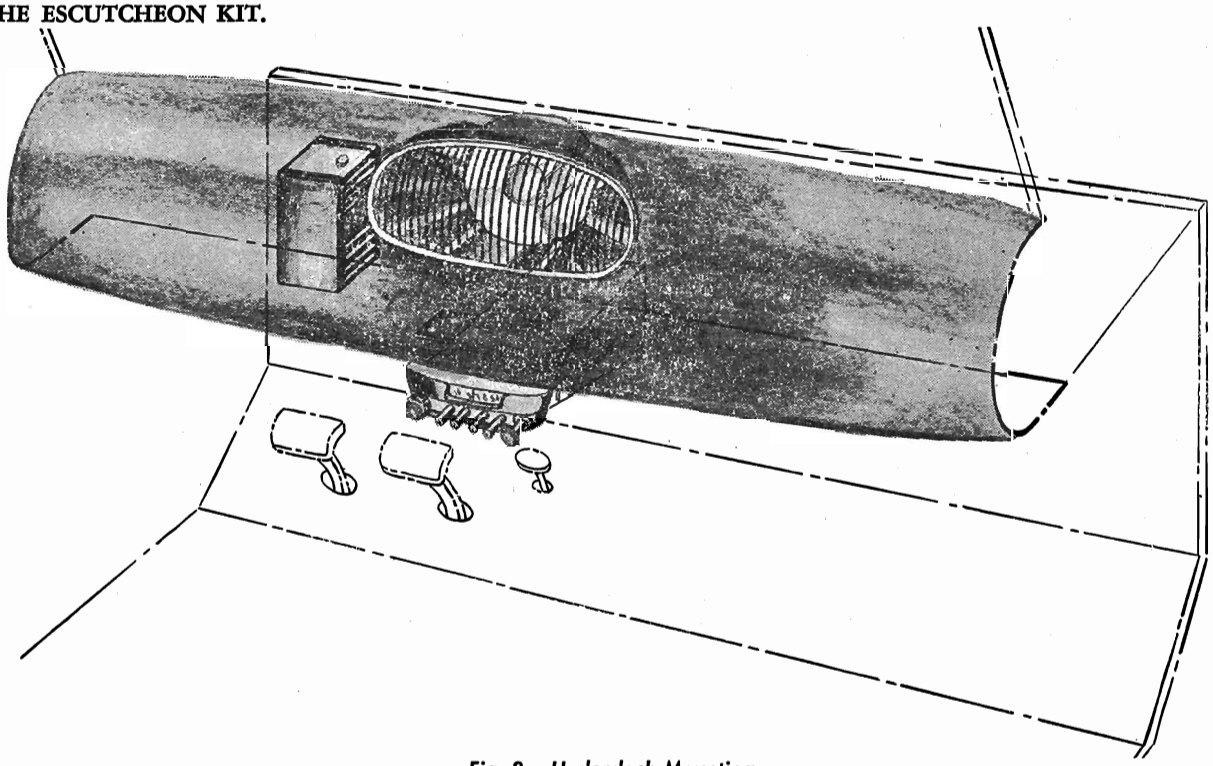

Fig. 3. Underdash Mounting

©John F. Rider

Compliments of www.nucow.com

MODEL 6295-1,
Ch. 528.6295-1

MOUNTING THE POWER UNIT

The power unit mounts on the firewall (see Fig. 3). Determine a suitable position for mounting it by holding the case in your hands against the firewall. When a suitable position has been determined, then check the underhood side of the wall, to make sure there is no obstruction to prevent drilling a hole and inserting the mounting bolt. Having located a suitable position that will permit drilling, mark and drill a 5/16" hole. Insert the 1/4 inch diameter by 3 inch long, carriage type mounting bolt into the hole from the underdash side and attach the lockwasher and nut on the underhood side, but do not tighten. Now holding the case in a vertical position (with wingnut on the bottom), bring the case up to the bolt and slide the channel in the mounting plate down over the head of the bolt. The lockwasher and nut on the underhood side should then be tightened down securely.

If, because of limited space, you find it necessary to mount the power unit in a horizontal or angle position, this type of mounting is entirely satisfactory and has no ill effect on the operation of the radio.

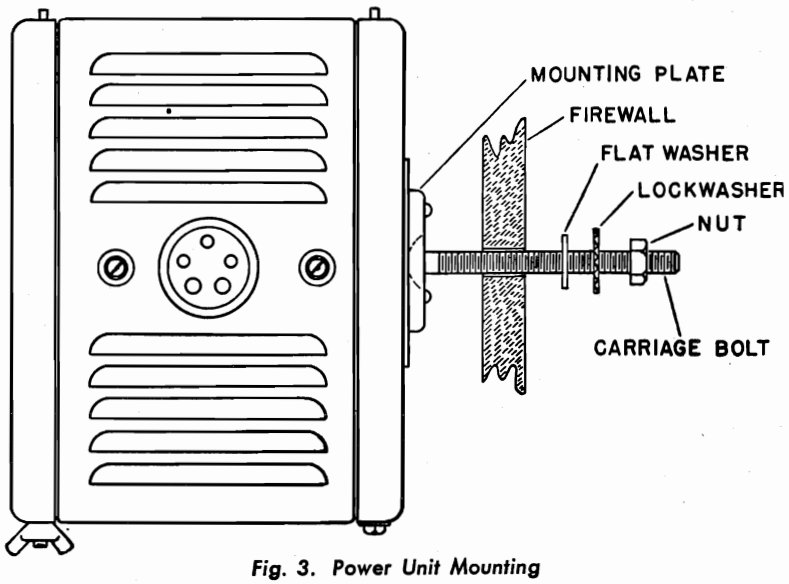

Fig. 3. Power Unit Mounting

CONNECTING THE RADIO

The antenna cable should be connected to the radio by inserting the plug into the antenna receptacle on the side of the control unit (see Fig. 4). Plug the speaker and power cables into the sockets provided on the sides of the Power Unit. Connect the "A" lead to the battery side of the ammeter behind the instrument panel. The fuse should then be inserted into the holder in the "A' lead. These connections are illustrated in Fig. 4.

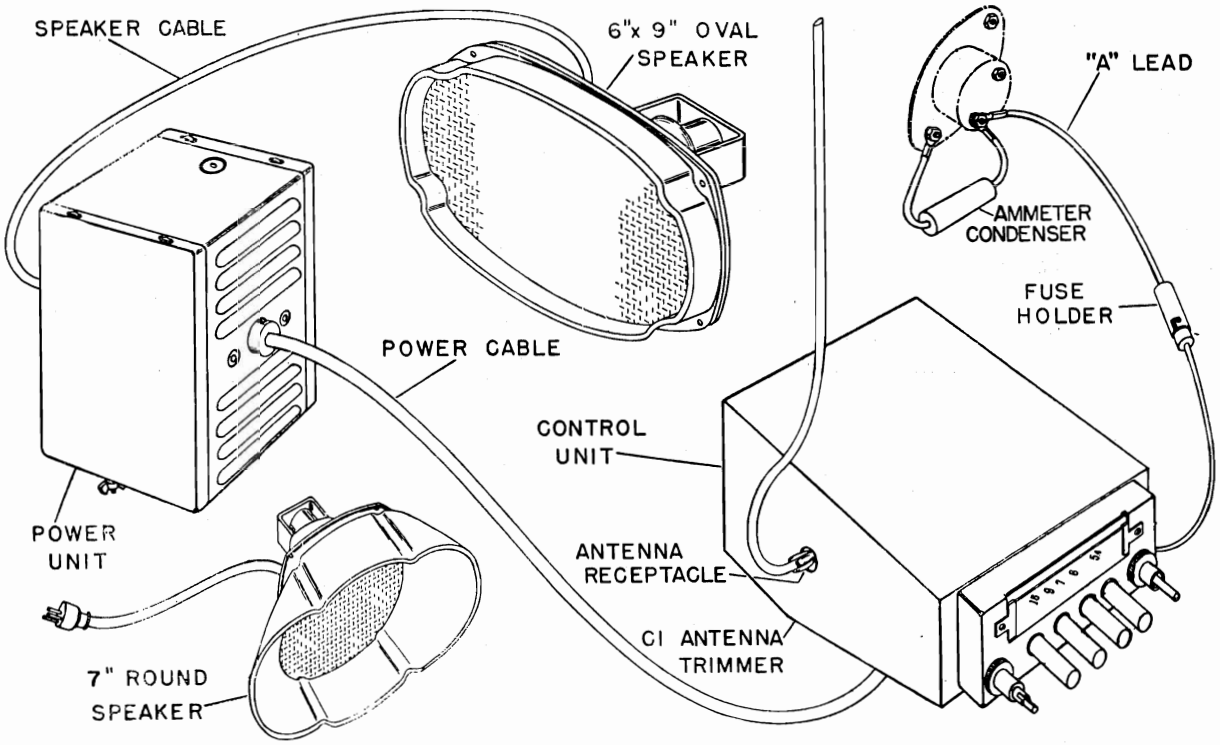

Fig. 4. Connecting the Radio

©John F. Rider

Compliments of www.nucow.com

MODEL 6295-1,
Ch. 528.6295-1

CONTROLS

There are six operating controls on the front of the Control Unit, (see Fig. 5). The two outside knobs are dual purpose controls, the other four are PUSHBUTTON STATION SELECTORS. The left-hand control consists of two knobs mounted on concentric shafts; the front knob (round) is the ON-OFF-SWITCH and VOLUME CONTROL; the rear knob (with four points) is the MANUAL TONE CONTROL. The knob on the right is the MANUAL TUNING CONTROL and it also serves as a fifth PUSHBUTTON STATION SELECTOR. The use of these controls is explained below.

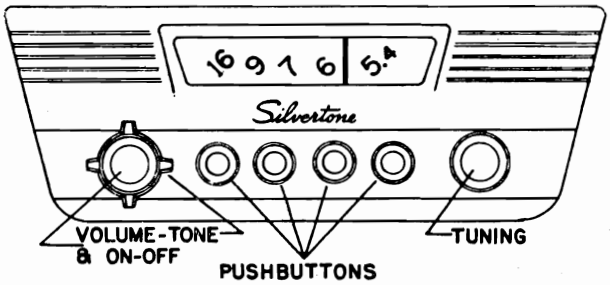

Fig. 5. Control Unit Panel

THE ON-OFF-SWITCH AND VOLUME CONTROL

When the outer left knob is turned all the way to the left the receiver is switched off and there is no drain from the car's battery. Rotating the knob part of a turn toward the right switches the receiver on and illuminates the dial. Further rotation of the knob increases the volume. After a station has been tuned in properly the volume control knob should be adjusted to give the desired volume.

MANUAL TUNING

Use the right-hand knob to tune in stations manually. To select a station, push in the knob and tune the radio by turning the knob until the desired station is heard. The dial pointer will indicate the frequency to which you are tuned.

The dial is marked in Kilocycles minus the final two zeroes. Always tune carefully for the clearest sound and minimum background noise.

PUSHBUTTON TUNING

Adjusting the pushbutton station selectors is simple and quick. No tools are required and a button may be set up for a new station in a few seconds. Each button can be tuned to any station in the broadcast band; thus you can arrange the tuning in any order to suit your convenience.

Before making the following adjustments, turn the radio on and let it warm up for 15 minutes.

Choose the PUSHBUTTON STATION SELECTOR you wish to adjust, and push the button all the way in; it will lock in this position. Now tune in the station to which you wish to pre-tune by turning the button to right or left until the desired station is heard. The dial pointer will indicate the frequency to which you are tuned, but to insure the accuracy of the setting, keep the volume control turned low and adjust the button for sharpest tuning. This will be indicated when the sound is clearest and noise at a minimum. The button is now properly adjusted and should not be turned again until it is desired to set it for a different station.

Follow the above procedure to adjust the remaining PUSHBUTTON STATION SELECTORS.

As was mentioned under the heading *CONTROLS,* the MANUAL TUNING CONTROL has been designed to serve as a fifth PUSHBUTTON STATION SELECTOR. If you wish to use this control as a PUSHBUTTON STATION SELECTOR, simply follow the procedure given above for adjusting the other PUSHBUTTON STATION SELECTORS. However, remember that if you use this control for MANUAL TUNING at any time, it will have to be re-set to the desired station if you wish to use it again as a PUSHBUTTON STATION SELECTOR.

S84--382 SUPPRESSION KIT AND MISCELLANEOUS PARTS

1 S84-233—"A" lead assembly
1 A43-10—Fuse
1 A81-13—Sleeve (for fuse)
2 A16-183—.5 MFD condensers
1 A96-4—Distributor Suppressor
20" wire braid
1 bolt—1/4" diameter by 3" long
1 lockwasher
1 flat washer
1 nut

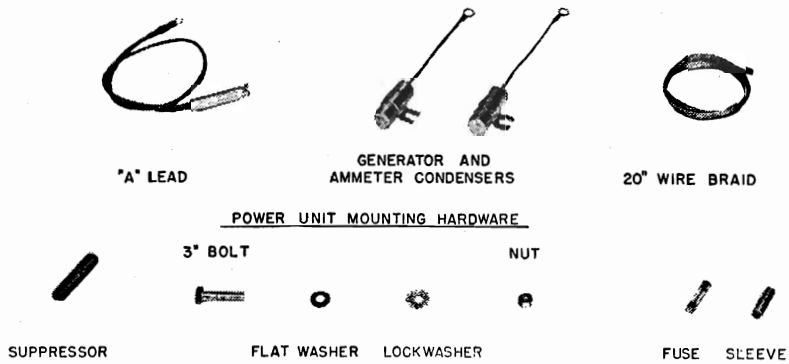

Fig. 6. Suppression Kit and Miscellaneous Parts

© John F. Rider

Compliments of www.nucow.com

MODEL 6295-1,
Ch. 528.6295-1

THE TONE CONTROL

The inner left knob (with four points) is the TONE CONTROL, which permits you to select the most pleasing tonal range. When it is turned all the way to the right (clockwise) the tone is treble or brilliant. This position is best for the most distinct reproduction, especially of speech. Turning the knob to the left (counterclockwise) makes the tone more mellow. This is often desirable for certain types of music and is also useful to lessen the effects of static and electrical noise. Turn the knob to the position that gives the tone most pleasing to you.

MATCHING THE ANTENNA

An adjusting screw for matching the receiver to the particular antenna used is accessible through a hole in the bottom side of the Control Unit. (See Fig. 4.) Set the dial pointer between 1400 KC and 1500 KC, where no station is heard with the volume control fully on. Then use a small screw driver to turn the adjusting screw to the point giving the most hiss or noise. The set is now ready for operation.

ELIMINATING MOTOR NOISE

Every precaution was taken in the design of this radio to eliminate motor noise interference. However, in the remote instance that it may be found desirable to take further steps, the following notes are added for your guidance.

IMPORTANT: Special care should be taken when mounting the radio to make sure all paint, grease, rust, etc., is removed from all mounting points. A good electrical contact at these points will aid materially in eliminating motor noise.

GENERATOR CONDENSER

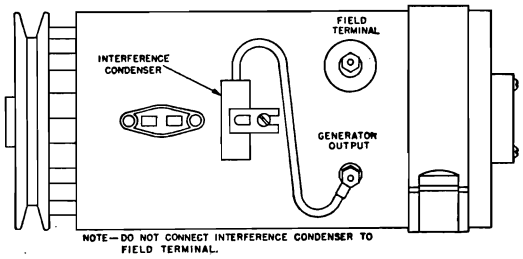

Fig. 7

The generator condenser must be connected to the battery terminal of the generator in all cases. If your car is equipped with a generator using an automatic regulator, make sure the condenser IS NOT fastened to the field winding terminal. If in doubt, your local car dealer can advise you as to where the car manufacturer recommends connecting it.

DISTRIBUTOR SUPPRESSOR

Remove from distributor cap the high tension lead from coil to distributor. Cut the lead two inches from the end, and screw the distributor resistor on to the coil lead, then screw the short length into the resistor and plug the cable into the distributor cap.

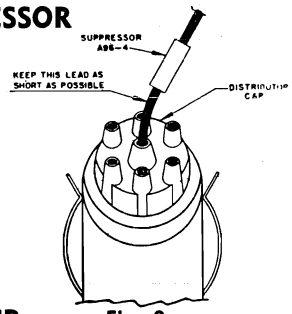

Fig. 8

AMMETER CONDENSER

A .5 MFD bypass condenser is furnished for attaching to the ammeter. This should be connected to either side of the ammeter with the ground lug fastened to a good ground nearby. In most case the use of this condenser, the distributor suppressor, and the generator condenser, will eliminate all objectionable ignition interference.

ELECTRICAL ACCESSORIES

In some cases, it may be found that car accessories such as electric heaters, lighters, automatic relays, or gauges, may cause interference while in operation. Proper procedure in such cases is to try another by-pass condenser from ground to the suspected accessory until the source of the interference is found. The condenser then should be permanently mounted in this location.

HIGH AND LOW TENSION LEADS

In many cases the low tension battery leads, etc., are grouped together with the high tension wires. These leads will very often pick up motor noise and feed it into the receiver through the battery circuit. In cases such as these it will be necessary to separate the low tension from the high tension wires and run them through another hole if they run from the engine compartment up to the instrument panel. This condition is particularly true on the V-8 Ford, as the battery and primary leads run through a special tube which also houses the high tension leads. Shield and ground these leads.

GROUNDING THE POWER CABLE

In some cases motor noise is reduced by grounding the power cable to the power unit case. See Fig. 4. Loosen one of the two screws located on either side of the power cable socket on the power unit. Cut a six inch length off the wire braid supplied in the Suppression Kit. Fasten one end under the screw and tighten down the screw again. Wrap the remainder of the braid around the cable and solder or tape it securely in place.

IGNITION COILS

In cars where the ignition coil is located on the back side of the instrument panel it is often necessary to use an additional condenser. It must be installed from the battery side of the ignition coil to the closest ground on the instrument panel.

Short leads are very important. Where coils are mounted either on the instrument panel or in the driver's compartment, it may be necessary to shield the high tension lead from the coil to the distributor.

WHEEL STATIC

Wheel Static is a form of interference caused by the rotation of the front wheels of the car, and it is, of course, only noticed when the car is in motion. If this form of interference is present it can be eliminated by installing wheel static collector springs between the inner hub cap and the spindle shaft.

BONDING OF STEERING COLUMN TO BODY

Bonding the steering column to the fire wall with a short braid may also be effective. Clean the paint from the steering column at the fire wall where the column enters the motor compartment, and solder on a short piece of braid. Ground the end of the braid to the fire wall.

In some cases it may be necessary to ground the tubes and rods coming through the fire wall in order to reduce the interference. Clean them with emery cloth and spot-solder the braid, fastening the end under a convenient screw. A 1/4" piece of wire braid 20 inches long is furnished in the suppression kit assembly for this purpose.

©John F. Rider

Compliments of www.nucow.com

MODEL 6295-1,
Ch. 528.6295-1

ELECTRICAL SPECIFICATIONS

Power Supply.....6.3 volts DC
Current.....6.5 amp. average
Frequency Range.....540 to 1600 KC
I. F. Frequency.....262 KC
Speaker.....7" round or 6"x9" oval
Power Output.....2.5 watts, undistorted
5 watts, maximum
Sensitivity.....3 microvolt average for 1 watt output
Selectivity...40 KC broad at 1000 times signal, at 1000 KC

The set contains the following:

1—6BA6—R. F. Amplifier.
1—6BE6—Converter.
1—6BA6—I. F. Amplifier.
1—6AT6—Detector—AVC—1st audio.
1—6V6GT—Power output.

1—6X5GT—Rectifier.

SERVICE NOTES

Voltages taken from the different points of the circuit to chassis are measured with the volume and tone controls in maximum position, all tubes and the rectifier in their sockets, no signal applied, and with a voltmeter having a resistance of 20,000 ohm per volt. These voltages are clearly shown on the schematic diagram (Figs. 11 and 12). All voltages should be measured with an input voltage of 6.3 volts DC.

The tubes and rectifier are accessible for servicing without removing the chassis. Loosen the wing-nut on the cover of the power supply case and lift off the cover. On the RF Tuning Unit, loosen the wing nuts on the two stud bolts protruding from the side of the case at the top, rear, and remove the plate over the tubes. CAUTION: Be sure to replace the tubes and the rectifier in the proper sockets. Refer to Tube and Rectifier Location Pictorials, Fig. 10 and 14.

WARNING: The dash pot (brass cylinder on the mechanical tuner) should never be oiled. If it is ever necessary to make adjustments on the mechanical tuner, the dash pot may be cleaned with ordinary cleaning solvents.

ALIGNING INSTRUCTIONS

Never attempt any adjustments on this receiver unless it becomes necessary to replace the coils or transformer, or the adjustments have been tampered with in the field. Always make certain that other circuit components, such as tubes, the rectifier, condensers, resistors, etc., are normal before proceeding with realignment.

If realignment is necessary follow the instructions given under the heading "ALIGNMENT PROCEDURE." After realignment has been completed repeat the procedure as a final check.

INSTRUCTIONS FOR REMOVING THE CHASSIS FROM THE CASE

RF TUNING UNIT: Remove the knobs and nuts from the two control shafts. Take out the six self-tapping screws around the back edge of the case and remove the back cover. Remove the plate over the tubes (see service notes). Loosen the screw securing the cable clamp, slip the cable out from under the clamp and out of the notch. Remove the lead from the plug-in terminal on the spark plate attached to the inside top of case. Slide the "A" lead out of the notch. Now tilt the front of the case up so that the chassis can slide out. Grasp the chassis at the rear with the fingers against the chassis plate and with the thumb hooked over the IF transformer. Pull the chassis straight back, being careful that the pointer bracket does not get caught against the spark plate components. Handle the chassis carefully and set down gently so that the mechanical tuning parts may not be damaged or the settings of the coil cores upset by jarring.

POWER SUPPLY: Loosen the wing-nut and lift the top cover off. Remove the 6-32x1/2 screw securing the high voltage cable socket to the case. Remove the four screws (one on each side) near the bottom outside of the case. Now take the case in one hand and grasp the output transformer with the other hand and lift the chassis straight up.

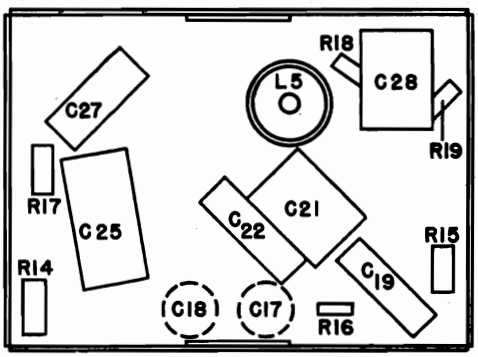

Fig. 9. Power Unit—Bottom View

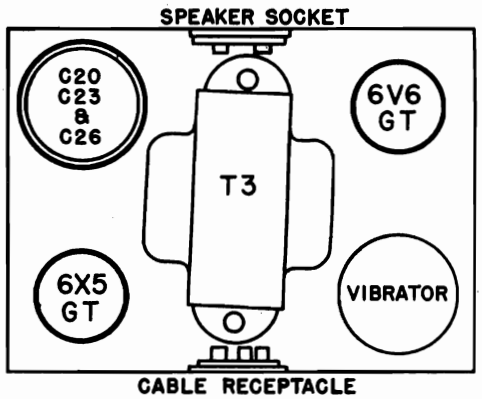

Fig. 10. Power Unit—Top View

©John F. Rider

Compliments of www.nucow.com

MODEL 6295-1,
Ch. 528.6295-1

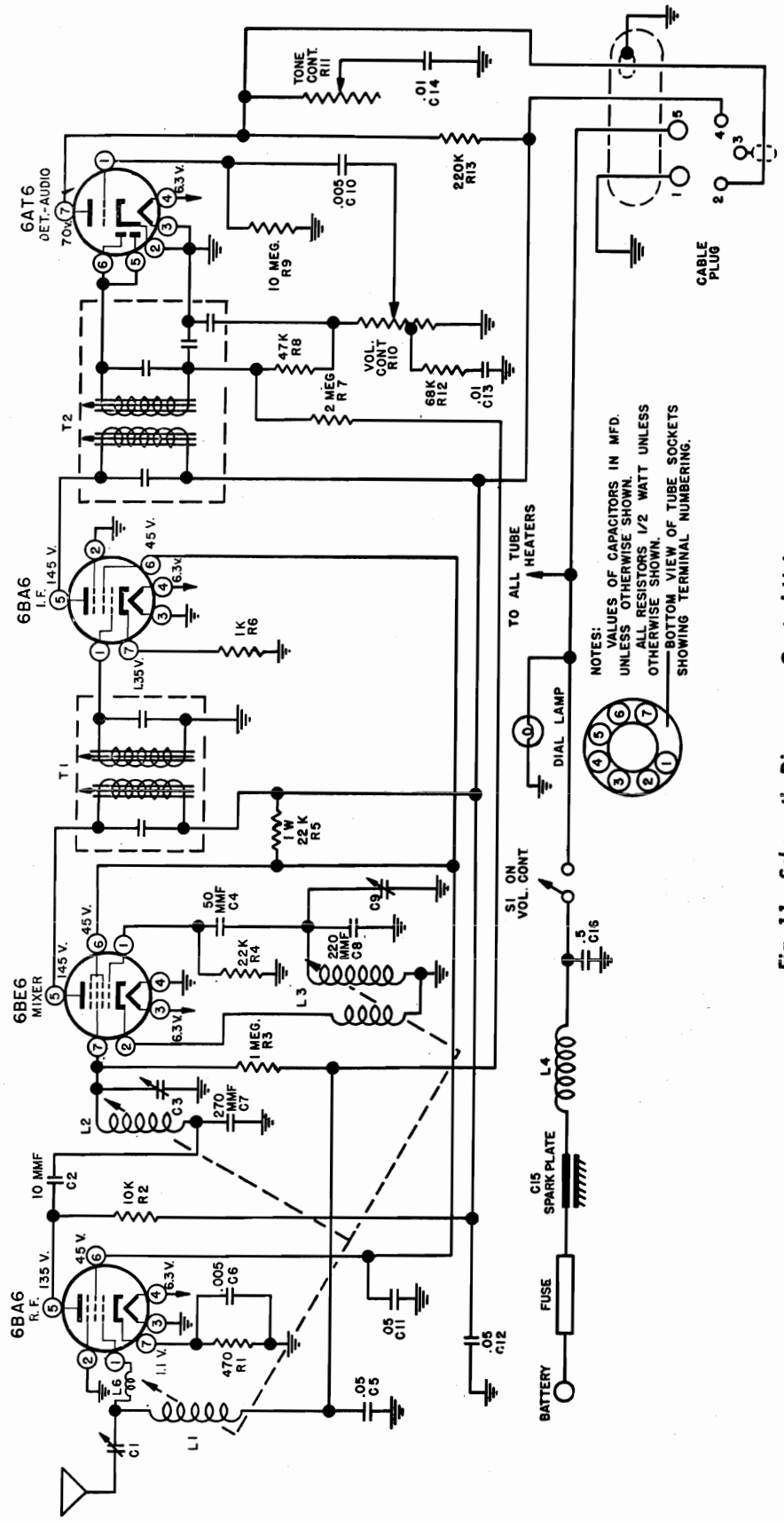

Fig. 11. Schematic Diagram—Control Unit

©John F. Rider

Compliments of www.nucow.com

MODEL 6295-1,
Ch. 528.6295-1

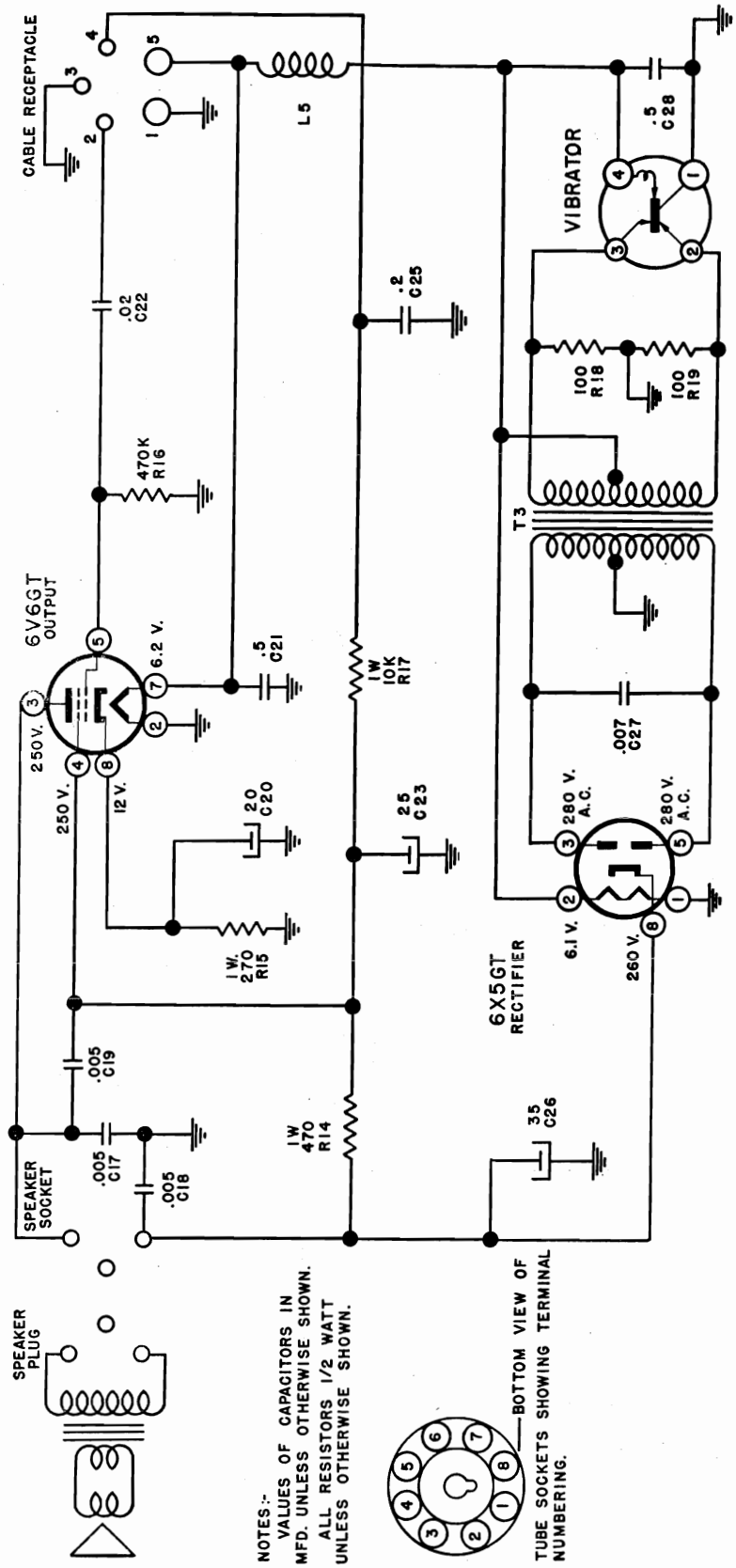

Fig. 12. Schematic Diagram—Power Unit

©John F. Rider

Compliments of www.nucow.com

ALIGNMENT PROCEDURE

Volume control—Maximum, all adjustments.

No signal applied to antenna.

Power input—6.3 volts.

Connect dummy antenna in series with output lead of signal generator.

Connect output meter across voice coil.

Connect ground lead of signal generator to chassis.

Repeat alignment procedure as a final check.

The following equipment is necessary for proper alignment:

Signal generator that will provide the test frequencies as listed, modulated 400 cycles, 30%.

Non-metallic screwdriver.

Output meter. (1.8 volt for 1 watt output.)

Dummy antennas—.1 MFD., 75 MMFD., 30 MMFD.

For alignment points refer to Figures 13 and 14.

Slug Position	Generator Frequency	Dummy Ant.	Generator Connections	Trimmer Reference	Trimmer Adjustment	Trimmer Function
Fully Out	262 KC	.1 MFD.	6BE6 Grid	T2	Maximum	Output I.F.
Fully Out	262 KC	.1 MFD.	6BE6 Grid	T1	Maximum	Input I.F.
Fully Out	1610 KC	*	Ant. lead	C9	Maximum	Oscillator
Tune in signal from generator	1400 KC	*	Ant. lead	C3	Maximum	R.F.
Tune in signal from generator	1400 KC	*	Ant. lead	C1	Maximum	Antenna

*30 MMFD across input terminals and 75 MMFD in series with "hot" side of signal generator leads.

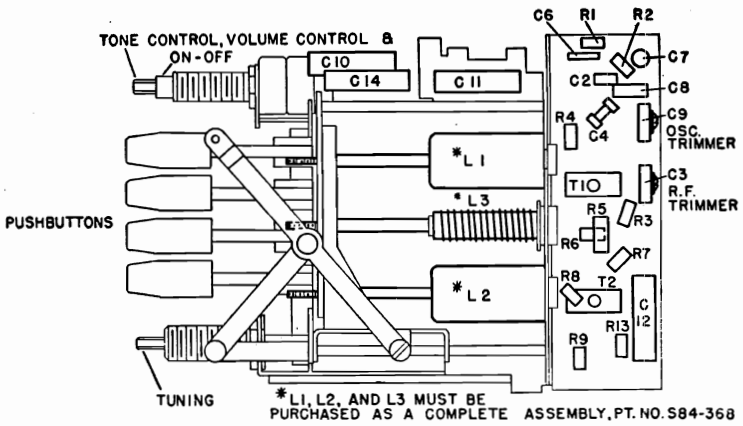

Fig. 13. Control Unit—Bottom View

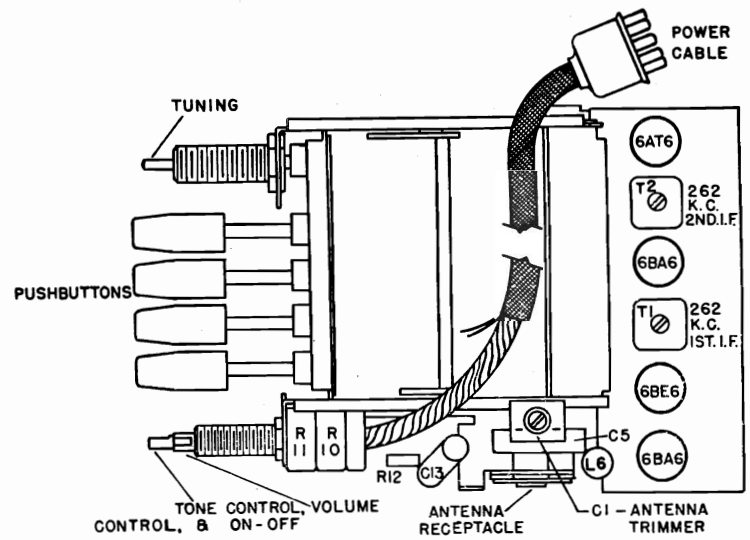

Fig. 14. Control Unit—Top View

©John F. Rider

Compliments of www.nucow.com

MODEL 6295-1,
Ch. 528.6295-1

PARTS LIST

Schematic Location	Part No.	Description
C1	A20-148	Capacitor—antenna trimmer
C2	A15-197	Capacitor—ceramic—10 mmfd.
C3, C9	A20-147	Capacitor—dual trimmer—R.F. and Oscillator
C4	A15-194	Capacitor—ceramic—50 mmfd.
C5	A16-197	Capacitor—.05 mfd.—200 v.
C6, C17, C18	A16-177	Capacitor—ceramic—.005 mfd.
C7	A15-215	Capacitor—ceramic—270 mmfd.
C8	A15-218	Capacitor—silver mica—220 mmfd.
C10, C19	A16-190	Capacitor—.005 mfd.—600 v.
C11, C12	A16-189	Capacitor—.05 mfd.—400 v.
C13, C14	A16-192	Capacitor—.01 mfd.—400 v.
C15		Capacitor—spark plate
C16, C21, C28	A16-184	Capacitor—.5 mfd.—100 v.
	A18-300	Capacitor—electrolytic
C20		20 mfd.—25 v.
C23		25 mfd.—350 v.
C26		35 mfd.—400 v.
C22	A16-206	Capacitor—.02 mfd.—600 v.
C25	A16-188	Capacitor—.2 mfd.—400 v.
C27	A16-207	Capacitor—.007 mfd.—1600 v.—oil filled
	B23-157	Cable—power
L1, L2, L3	S84-368	Coil—assembly—including carriage and slugs, etc.
L4	A33-229	Coil—"A" line choke
L5	A33-228	Coil—vibrator hash choke
L6	A10-527	Coil—antenna loading
	A83-421	Clip—I.F. transformer mounting
R10, R11, S1	A24-183	Control—dual—ON-OFF-VOLUME and TONE
	A43-10	Fuse—15 amp.—3AG
	A47-115	Grommet—rubber—power cable
	S84-233	Kit—"A" lead assembly
	B52-296	Knob—Tuning
	B52-297	Knob—Volume
	B52-298	Knob—Tone
	A89-7	Lamp—pilot—No. 47 Bayonet
R1	A60-770	Resistor—470 ohm—½ watt
R2	A60-760	Resistor—10K ohm—½ watt
R3	A60-668	Resistor—1 megohm—½ watt
R4	A60-744	Resistor—22K ohm—½ watt
R5	A60-773	Resistor—22K ohm—1 watt
R6	A60-675	Resistor—1000 ohm—½ watt
R7	A60-726	Resistor—2.2 megohm—½ watt
R8	A60-730	Resistor—47K ohm—½ watt
R9	A60-728	Resistor—10 megohm—½ watt
R12	A60-775	Resistor—68K ohm—½ watt
R13	A60-672	Resistor—220K ohm—½ watt
R14	A60-694	Resistor—470 ohm—1 watt
R15	A60-754	Resistor—270 ohm—1 watt
R16	A60-731	Resistor—470K ohm—½ watt
R17	A60-698	Resistor—10K ohm—1 watt
R18, R19	A60-752	Resistor—100 ohm—½ watt
	A83-646	Retainer—dial scale—left
	A83-647	Retainer—dial scale—right
	C79-387	*Speaker—7" round
	C79-386	*Speaker—6"x9" oval
	S84-383	Transformer—output—with cable and plug
T1	A10-537	Transformer—I.F. No. 1
T2	A10-540	Transformer—I.F. No. 2
T3	C80-258	Transformer—power
	A34-105	Vibrator—Mallory No. 659

*When ordering a replacement speaker, order the same type, 7" round or 6"x9" oval, as the old one that was installed in your car.

Mechanical Tuner Parts

A56-141	Pusher nut—manual tuning
A56-142	Pusher nut—pushbutton tuning
A75-75	Pusher rod—manual tuning
S84-355	Pushbutton and rod assembly

IMPORTANT: All tubular condensers must be high temperature (85°C.) wax type.

©John F. Rider

Compliments of www.nucow.com

MODEL 6295-2,
Ch. 528.6295-2

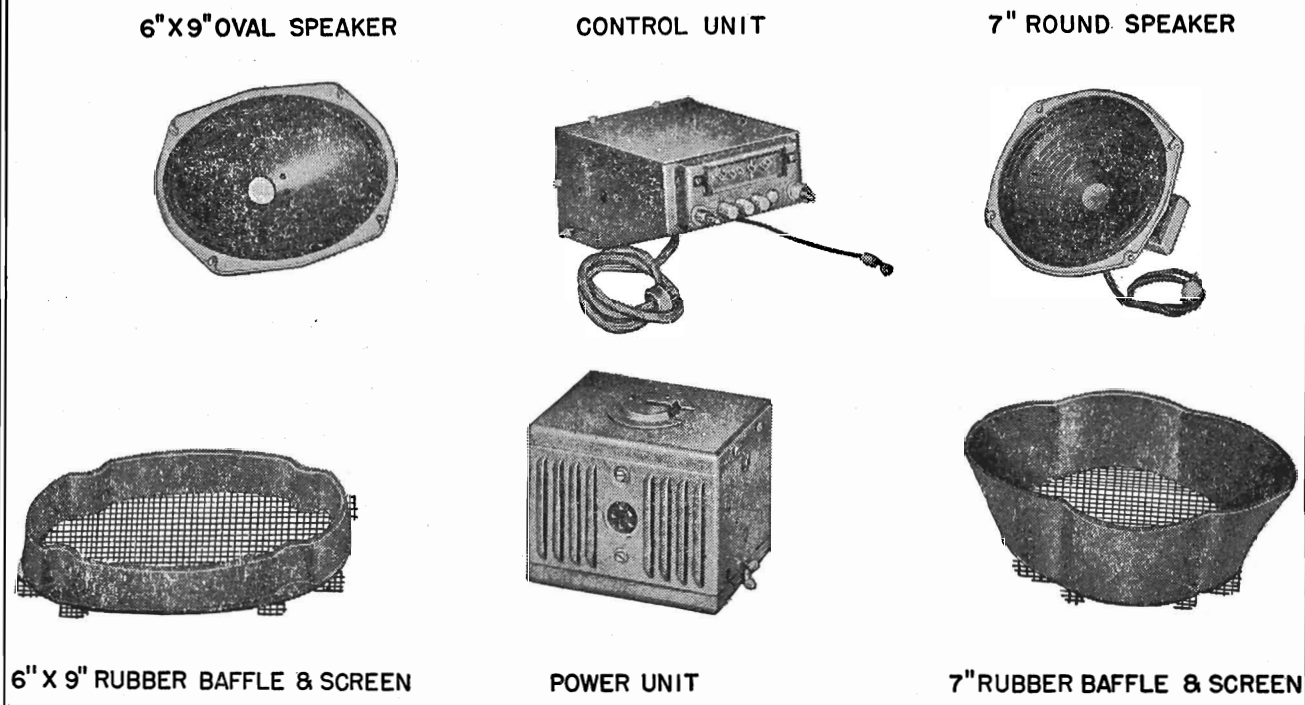

Fig. 1. Parts in Master Package

Only one of the speakers illustrated is supplied with each radio; the type of speaker you receive will be determined by the make of car for which the radio is ordered.

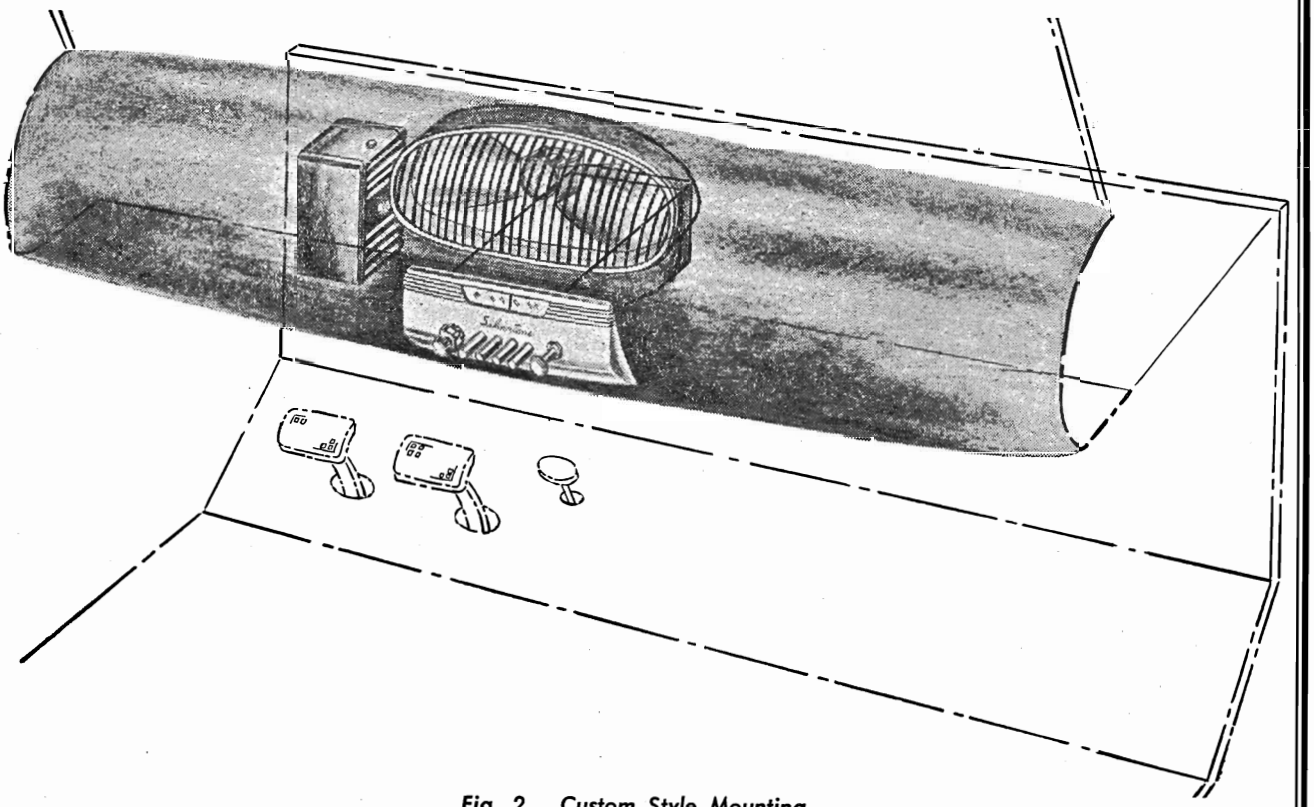

Fig. 2. Custom Style Mounting

©John F. Rider

Compliments of www.nucow.com

MODEL 6295-2,
Ch. 528.6295-2

DESCRIPTION

Your SILVERTONE radio is a newly designed DE LUXE PUSHBUTTON TUNING AUTOMOBILE RECEIVER of advance superheterodyne circuit design, for operation on the six volt storage battery in your car. It covers the frequency range from 540 KC to 1600 KC. In addition to PUSHBUTTON TUNING it features BASS-COMPENSATED VOLUME CONTROL supplemented by a MANUAL TONE CONTROL. It consists of three principal parts—the Control Unit, the Power Unit and the Speaker (See Fig. 1)—and is supplied with mounting parts to accommodate either custom installation in the instrument panel or underdash mounting. (See Figs. 2 and 3.)

Special care has been taken in the design of this receiver to insure the finest in sensitivity and selectivity, thereby insuring good reception of even distant or very weak stations. It is simple to install. The antenna input circuit is adjustable to permit the use of any two, three or four section telescopic, whip or "fishpole" type antenna.

Each complete radio, with accessories, is made up in two separate packages, one carton containing the Escutcheon Kit and speaker mounting hardware, the other carton containing the Control Unit, the Power Unit and either a 7" round speaker or a 6"x9" oval speaker, depending on the make and and model of the car for which the radio was ordered. This second carton will be stamped with the letter "A" to indicate that it contains a 7" round speaker, or the letter "B" to indicate the 6"x9" oval speaker.

Control Unit Escutcheon Kits (instrument panel matching or universal) are supplied as a separate item, thus permitting you to transfer the radio from one car to another with only the small expense of replacing the Escutcheon Kit and speaker if you desire to match the instrument panel of your new or different car. Instrument panel matching Escutcheon Kits for most popular late model cars are available at your nearest Sears retail store or Mail Order House. If your Silvertone radio is equipped with a universal underdash tuning panel it may be transferred as is to a different car without changing the Escutcheon Kit. However, if you wish to change from an underdash mounting to a custom style instrument panel mounting, this can be accomplished by discarding the universal Escutcheon Kit and replacing it with an instrument panel matching Escutcheon Kit (and 6"x9" oval speaker, if necessary), as outlined above.

INSTALLATION

THE SPEAKER

The speakers (7" round or 6"x9" oval) are supplied with sponge rubber baffles for mounting on flat or curved instrument panels. The rubber baffle for the 7" round speaker has flared sides so that it will cover an oval opening in the car's speaker grill as well as a round opening.

Speaker mounting hardware is supplied with each Escutcheon Kit for mounting the speaker in your car. This includes a "U-shaped" bracket for mounting the round speaker in cars on which it is not possible to mount the speaker on existing bolts.

SPECIFIC INSTRUCTIONS PERTAINING TO THE MOUNTING OF THE SPEAKER AND CONTROL UNIT IN THE CAR FOR WHICH YOU ORDERED YOUR RADIO ARE CONTAINED IN THE LEAFLET PACKED IN THE ESCUTCHEON KIT.

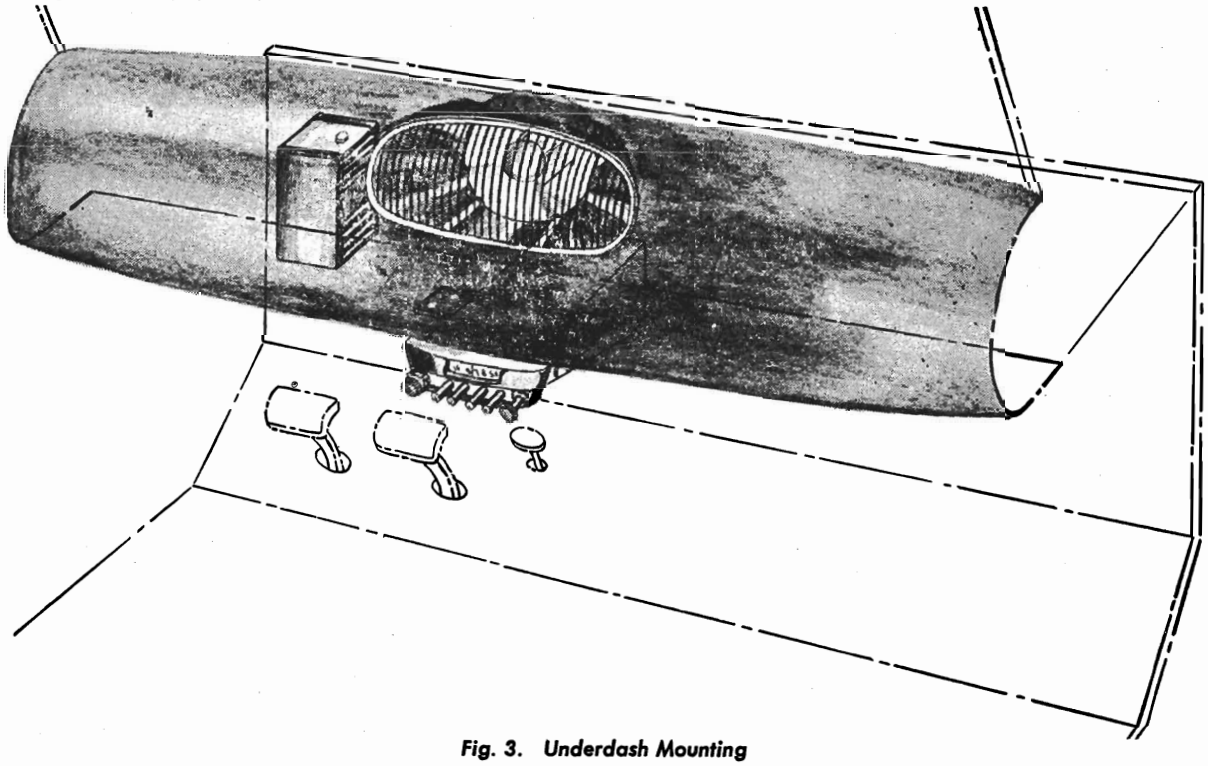

Fig. 3. Underdash Mounting

© John F. Rider

Compliments of www.nucow.com

MODEL 6295-2,
Ch. 528.6295-2

MOUNTING THE POWER UNIT

The power unit mounts on the firewall (see Fig. 3). Determine a suitable position for mounting it by holding the case in your hands against the firewall. When a suitable position has been determined, then check the underhood side of the wall, to make sure there is no obstruction to prevent drilling a hole and inserting the mounting bolt. Having located a suitable position that will permit drilling, mark and drill a 5/16" hole. Insert the ¼ inch diameter by 3 inch long, carriage type mounting bolt into the hole from the underdash side and attach the lockwasher and nut on the underhood side, but do not tighten. Now holding the case in a vertical position (with wingnut on the bottom), bring the case up to the bolt and slide the channel in the mounting plate down over the head of the bolt. The lockwasher and nut on the underhood side should then be tightened down securely.

If, because of limited space, you find it necessary to mount the power unit in a horizontal or angle position, this type of mounting is entirely satisfactory and has no ill effect on the operation of the radio.

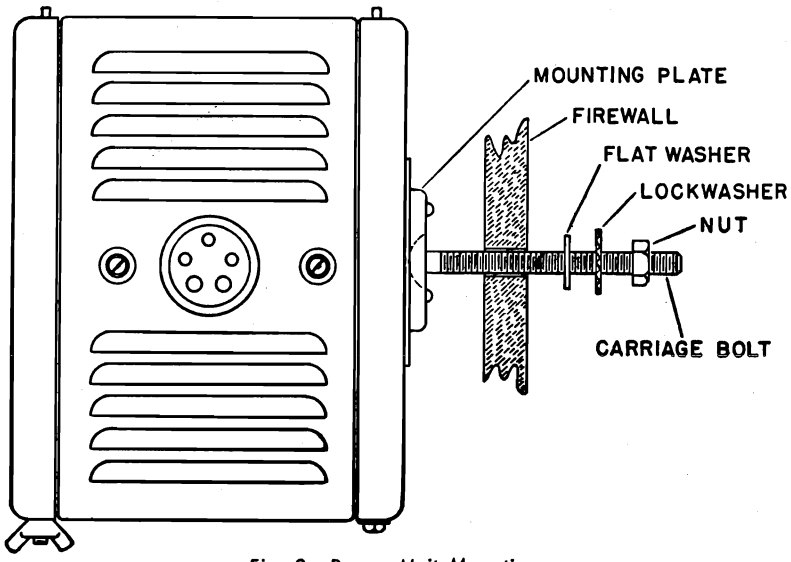

Fig. 3. Power Unit Mounting

CONNECTING THE RADIO

The antenna cable should be connected to the radio by inserting the plug into the antenna receptacle on the side of the control unit (see Fig. 4). Plug the speaker and power cables into the sockets provided on the sides of the Power Unit. **IMPORTANT: LOOSEN SCREW "A" (SEE FIG. 4) ON POWER UNIT CASE. WRAP THE PIGTAIL OF BRAID ON THE POWER SUPPLY CABLE AROUND THE SCREW AND TIGHTEN DOWN THE SCREW AGAIN. BE SURE THAT THE PIGTAIL IS SECURELY HELD BY THE SCREW.** Connect the "A" lead to the battery side of the ammeter behind the instrument panel. The fuse should then be inserted into the holder in the "A" lead. These connections are illustrated in Fig. 4.

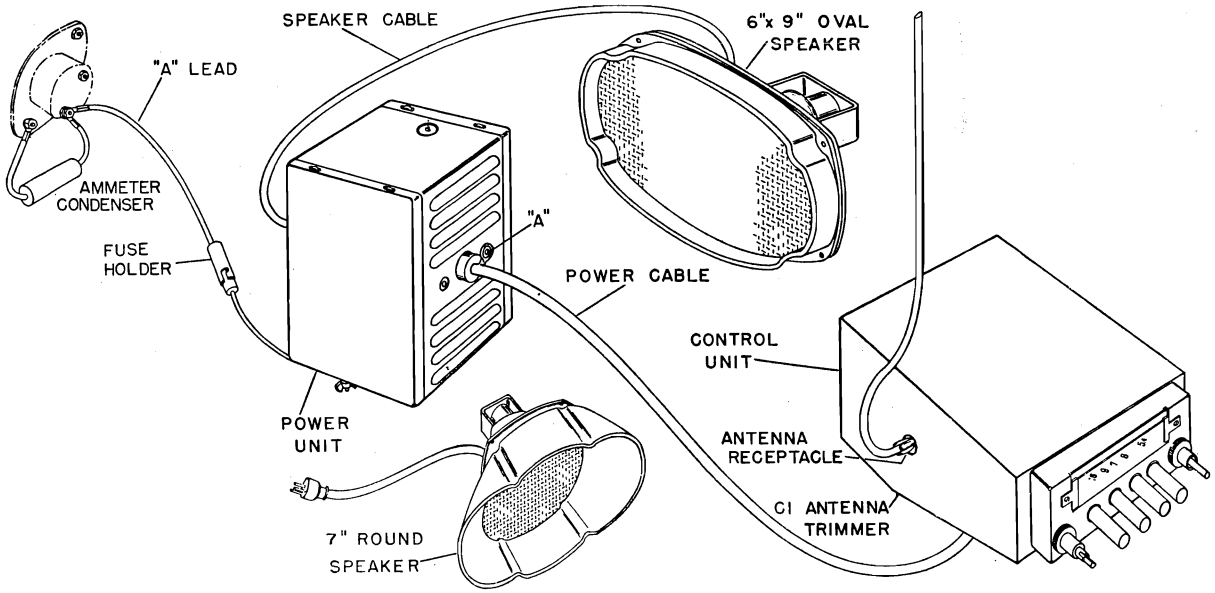

Fig. 4. Connecting the Radio

©John F. Rider

Compliments of www.nucow.com

MODEL 6295-2,
Ch. 528.6295-2

CONTROLS

There are six operating controls on the front of the Control Unit, (see Fig. 5). The two outside knobs are dual purpose controls, the other four are PUSHBUTTON STATION SELECTORS. The left-hand control consists of two knobs mounted on concentric shafts; the front knob (round) is the ON-OFF-SWITCH and VOLUME CONTROL; the rear knob (with four points) is the MANUAL TONE CONTROL. The knob on the right is the MANUAL TUNING CONTROL and it also serves as a fifth PUSHBUTTON STATION SELECTOR. The use of these controls is explained below.

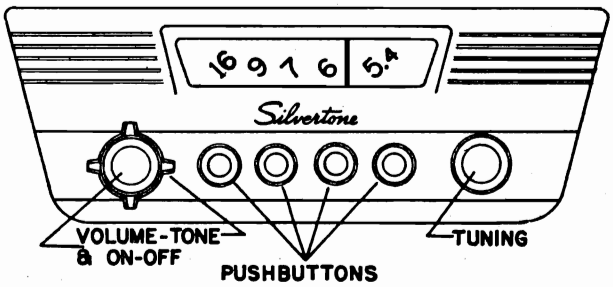

Fig. 5. Control Unit Panel

THE ON-OFF-SWITCH AND VOLUME CONTROL

When the outer left knob is turned all the way to the left the receiver is switched off and there is no drain from the car's battery. Rotating the knob part of a turn toward the right switches the receiver on and illuminates the dial. Further rotation of the knob increases the volume. After a station has been tuned in properly the volume control knob should be adjusted to give the desired volume.

MANUAL TUNING

Use the right-hand knob to tune in stations manually. To select a station, push in the knob and tune the radio by turning the knob until the desired station is heard. The dial pointer will indicate the frequency to which you are tuned.

The dial is marked in Kilocycles minus the final two zeroes. Always tune carefully for the clearest sound and minimum background noise.

PUSHBUTTON TUNING

Adjusting the pushbutton station selectors is simple and quick. No tools are required and a button may be set up for a new station in a few seconds. Each button can be tuned to any station in the broadcast band; thus you can arrange the tuning in any order to suit your convenience.

Before making the following adjustments, turn the radio on and let it warm up for 15 minutes.

Choose the PUSHBUTTON STATION SELECTOR you wish to adjust, and push the button all the way in; it will lock in this position. Now tune in the station to which you wish to pre-tune by turning the button to right or left until the desired station is heard. The dial pointer will indicate the frequency to which you are tuned, but to insure the accuracy of the setting, keep the volume control turned low and adjust the button for sharpest tuning. This will be indicated when the sound is clearest and noise at a minimum. The button is now properly adjusted and should not be turned again until it is desired to set it for a different station.

Follow the above procedure to adjust the remaining PUSHBUTTON STATION SELECTORS.

As was mentioned under the heading *CONTROLS,* the MANUAL TUNING CONTROL has been designed to serve as a fifth PUSHBUTTON STATION SELECTOR. If you wish to use this control as a PUSHBUTTON STATION SELECTOR, simply follow the procedure given above for adjusting the other PUSHBUTTON STATION SELECTORS. However, remember that if you use this control for MANUAL TUNING at any time, it will have to be re-set to the desired station if you wish to use it again as a PUSHBUTTON STATION SELECTOR.

S84--382 SUPPRESSION KIT AND MISCELLANEOUS PARTS

1 S84-233—"A" lead assembly
1 A43-10—Fuse
1 A81-13—Sleeve (for fuse)
2 A16-183—.5 MFD condensers
1 A96-4—Distributor Suppressor
20" wire braid
1 bolt—1/4" diameter by 3" long
1 lockwasher
1 flat washer
1 nut

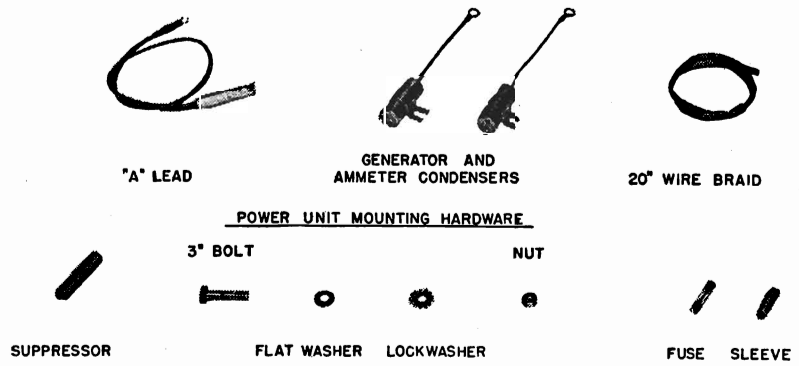

Fig. 6. Suppression Kit and Miscellaneous Parts

©John F. Rider

Compliments of www.nucow.com

MODEL 6295-2,
Ch. 523.6295-2

THE TONE CONTROL

The inner left knob (with four points) is the TONE CONTROL, which permits you to select the most pleasing tonal range. When it is turned all the way to the right (clockwise) the tone is treble or brilliant. This position is best for the most distinct reproduction, especially of speech. Turning the knob to the left (counterclockwise) makes the tone more mellow. This is often desirable for certain types of music and is also useful to lessen the effects of static and electrical noise. Turn the knob to the position that gives the tone most pleasing to you.

MATCHING THE ANTENNA

An adjusting screw for matching the receiver to the particular antenna used is accessible through a hole in the bottom side of the Control Unit. (See Fig. 4.) Set the dial pointer between 1400 KC and 1500 KC, where no station is heard with the volume control fully on. Then use a small screw driver to turn the adjusting screw to the point giving the most hiss or noise. The set is now ready for operation.

ELIMINATING MOTOR NOISE

Every precaution was taken in the design of this radio to eliminate motor noise interference. However, in the remote instance that it may be found desirable to take further steps, the following notes are added for your guidance. It may not be necessary to use all of the following suggestions to correct a noise condition in any one car. We recommend using these helpful hints in the manner of a process of elimination, using only those methods that correct your condition.

IMPORTANT: Special care should be taken when mounting the radio to make sure all paint, grease, rust, etc., is removed from all mounting points. A good electrical contact at these points will aid materially in eliminating motor noise.

GENERATOR CONDENSER

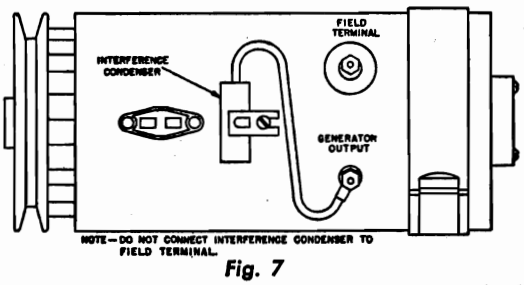

Fig. 7

The generator condenser must be connected to the battery terminal of the generator in all cases. If your car is equipped with a generator using an automatic regulator, make sure the condenser IS NOT fastened to the field winding terminal. If in doubt, your local car dealer can advise you as to where the car manufacturer recommends connecting it.

DISTRIBUTOR SUPPRESSOR

Remove from distributor cap the high tension lead from coil to distributor. Cut the lead two inches from the end, and screw the distributor resistor on to the coil lead, then screw the short length into the resistor and plug the cable into the distributor cap.

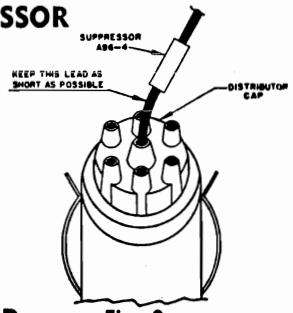

Fig. 8

AMMETER CONDENSER

A .5 MFD bypass condenser is furnished for attaching to the ammeter. This should be connected to either side of the ammeter with the ground lug fastened to a good ground nearby. In most cases the use of this condenser, the distributor suppressor, and the generator condenser, will eliminate all objectionable ignition interference.

VOLTAGE REGULATOR

It is normal to connect a .5 mfd condenser from the battery terminal on the voltage regulator to ground; however, in a number of cars the voltage regulator is mounted on rubber grommets. In such instances, the condenser should be grounded directly to the case of the regulator, rather than to some other ground point. Do not use a larger condenser than .5 mfd or else it will affect the timing of the regulator rendering it less useful.

ELECTRICAL ACCESSORIES

In some cases, it may be found that car accessories such as electric heaters, lighters, automatic relays, or gauges, may cause interference while in operation. Proper procedure in such cases is to try another by-pass condenser from ground to the suspected accessory until the source of the interference is found. The condenser then should be permanently mounted in this location.

HIGH AND LOW TENSION LEADS

Considerable ignition interference is experienced from leads in cables that run along the inside of the fire wall near the auto radio. For example, the battery lead to the low voltage side of the ignition coil on a 1950 Model Oldsmobile '88' runs through the fire wall and along the inside past the auto radio to a point beyond the steering column. This lead has heavy radiation. It can be disconnected at the ignition coil and pulled through the fire wall and pushed back through the fire wall at a point to the left of the steering column and run along the outside to its original point of connection on the ignition coil. Such types of leads should be watched for in all installations. They should be rerouted, if possible, or shielded with braid material. It is advisable in extreme cases to bond all leads by wrapping braid around them, and grounding the braid at the closest point. In wrapping a braid around a lead, do not remove the insulation from the leads as this is a radiation type of shield. Keep all ground leads as short as possible, or they will pick up interference.

Bunch up any excess length of the shielded power cable, wrap it with braid and ground it to the closest ground point.

IGNITION COILS

In cars where the ignition coil is located on the back side of the instrument panel it is often necessary to use an additional condenser. It must be installed from the battery side of the ignition coil to the closest ground on the instrument panel.

Short leads are very important. Where coils are mounted either on the instrument panel or in the driver's compartment, it may be necessary to shield the high tension lead from the coil to the distributor.

WHEEL STATIC

Wheel Static is a form of interference caused by the rotation of the front wheels of the car, and it is, of course, only noticed when the car is in motion. If this form of interference is present it can be eliminated by installing wheel static collector springs between the inner hub cap and the spindle shaft.

©John F. Rider

Compliments of www.nucow.com

MODEL 6295-2,
Ch. 528.6295-2

Bonding of Ungrounded Engine and Body Parts

The best rule is to keep the ignition interference underneath the hood as much as possible. This is best accomplished by using filters and suppressors on all points that would produce radiation as well as effectively bonding the hood, motor block, and any engine and body parts that are isolated from each other. It would be advisable to check all bolt-on fenders on which antennas are mounted, in that these fenders frequently are not sufficiently well grounded to the rest of the car. Use bonding braid wherever necessary to ground such fenders. Use wide bonding braid and keep all such braid as short as possible. Bonding all cables and tubes that go through the fire wall is necessary in some cases.

ELECTRICAL SPECIFICATIONS

Power Supply.....6.3 volts DC
Current.....6.5 amp. average
Frequency Range.....540 to 1600 KC
I. F. Frequency.....262 KC
Speaker.....7" round or 6"x9" oval
Power Output.....2.5 watts, undistorted
5 watts, maximum
Sensitivity.....3 microvolt average for 1 watt output
Selectivity...40 KC broad at 1000 times signal, at 1000 KC

The set contains the following:

1—6BA6—R. F. Amplifier.
1—6BE6—Converter.
1—6BA6—I. F. Amplifier.
1—6AT6—Detector—AVC—1st audio.
1—6V6GT—Power output.
1—6X5GT—Rectifier.

SERVICE NOTES

Voltages taken from the different points of the circuit to chassis are measured with the volume and tone controls in maximum position, all tubes and the rectifier in their sockets, no signal applied, and with a voltmeter having a resistance of 20,000 ohm per volt. These voltages are clearly shown on the schematic diagram (Figs. 11 and 12). All voltages should be measured with an input voltage of 6.3 volts DC.

The tubes and rectifier are accessible for servicing without removing the chassis. Loosen the wing-nut on the cover of the power supply case and lift off the cover. On the RF Tuning Unit, loosen the wing nuts on the two stud bolts protruding from the side of the case at the top, rear, and remove the plate over the tubes. CAUTION: Be sure to replace the tubes and the rectifier in the proper sockets. Refer to Tube and Rectifier Location Pictorials, Fig. 10 and 14.

WARNING: The dash pot (brass cylinder on the mechanical tuner) should never be oiled. If it is ever necessary to make adjustments on the mechanical tuner, the dash pot may be cleaned with ordinary cleaning solvents.

ALIGNING INSTRUCTIONS

Never attempt any adjustments on this receiver unless it becomes necessary to replace the coils or transformer, or the adjustments have been tampered with in the field. Always make certain that other circuit components, such as tubes, the rectifier, condensers, resistors, etc., are normal before proceeding with realignment.

If realignment is necessary follow the instructions given under the heading "ALIGNMENT PROCEDURE." After realignment has been completed repeat the procedure as a final check.

INSTRUCTIONS FOR REMOVING THE CHASSIS FROM THE CASE

RF TUNING UNIT: Remove the knobs and nuts from the two control shafts. Take out the six self-tapping screws around the back edge of the case and remove the back cover. Remove the plate over the tubes (see service notes). Loosen the screw securing the cable clamp, slip the cable out from under the clamp and out of the notch. Remove the lead from the plug-in terminal on the spark plate attached to the inside top of case. Slide the "A" lead out of the notch. Now tilt the front of the case up so that the chassis can slide out. Grasp the chassis at the rear with the fingers against the chassis plate and with the thumb hooked over the IF transformer. Pull the chassis straight back, being careful that the pointer bracket does not get caught against the spark plate components. Handle the chassis carefully and set down gently so that the mechanical tuning parts may not be damaged or the settings of the coil cores upset by jarring.

POWER SUPPLY: Loosen the wing-nut and lift the top cover off. Remove the 6-32x1/2 screw securing the high voltage cable socket to the case. Remove the four screws (one on each side) near the bottom outside of the case. Now take the case in one hand and grasp the output transformer with the other hand and lift the chassis straight up.

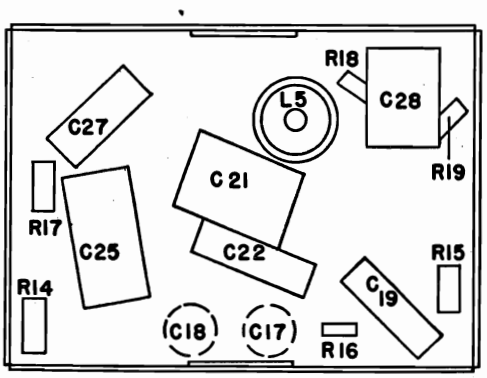

Fig. 9. Power Unit—Bottom View

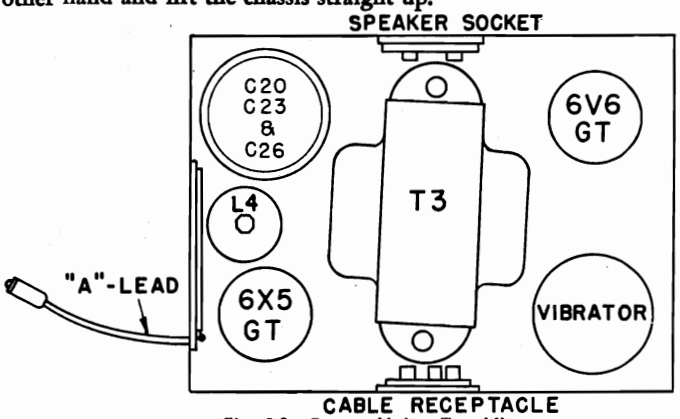

Fig. 10. Power Unit—Top View

© John F. Rider

Compliments of www.nucow.com

MODEL 6295-2,
Ch. 528.6295-2

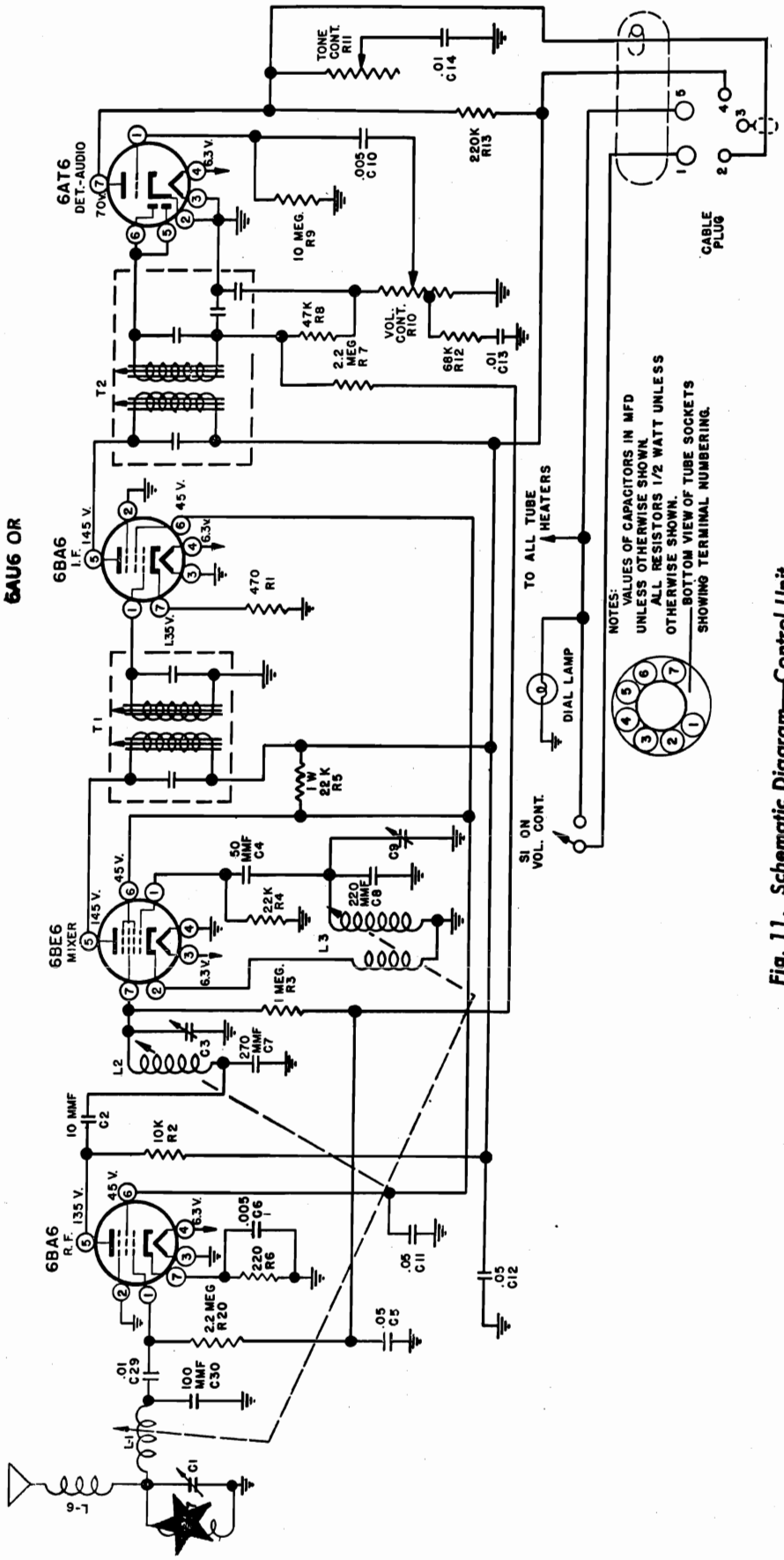

Fig. 11. Schematic Diagram—Control Unit

★ A60-775 Res. 68K—½ W.

©John F. Rider

Compliments of www.nucow.com

MODEL 6295-2,
Ch. 528.6295-2

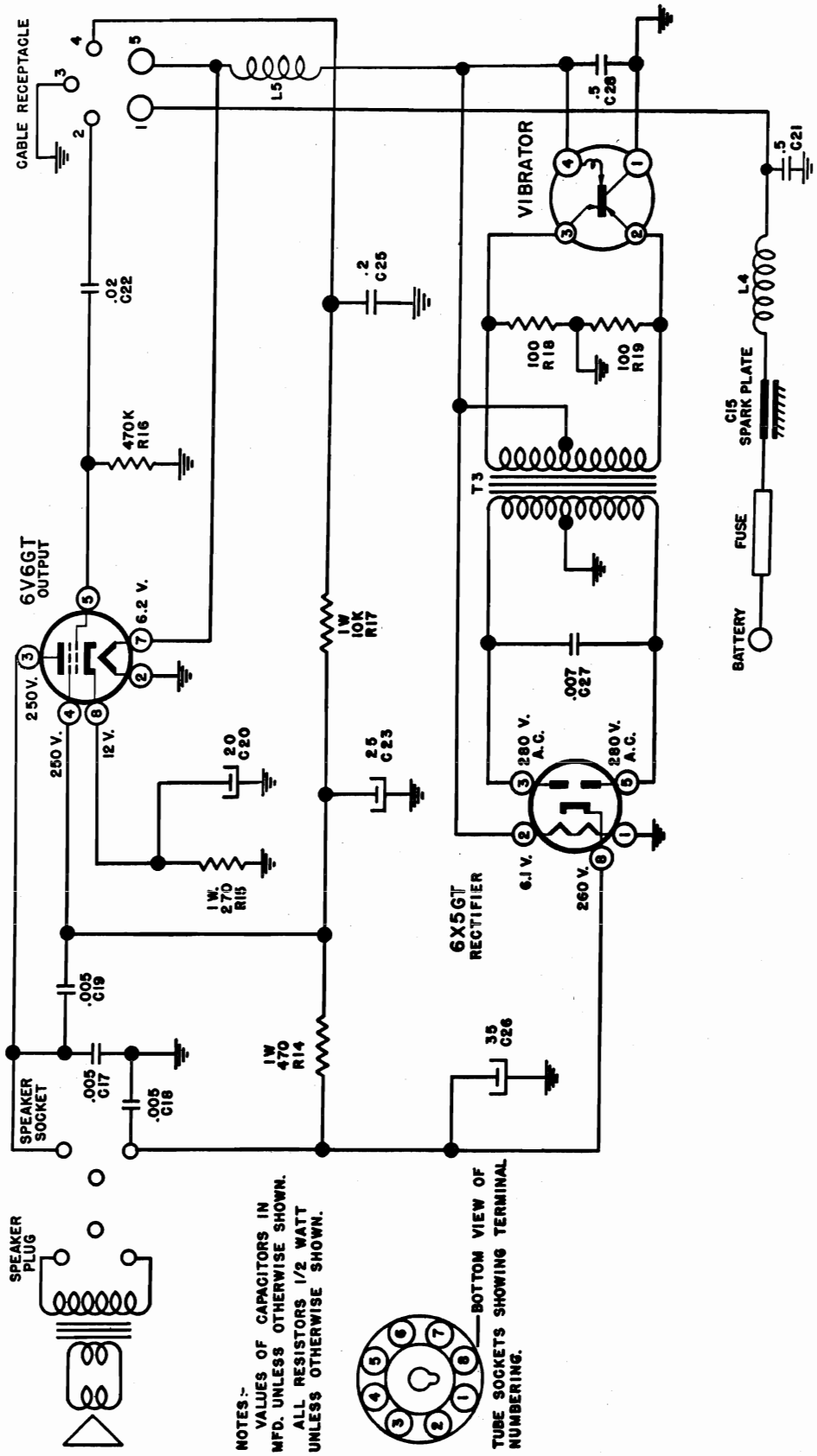

Fig. 12. Schematic Diagram—Power Unit

©John F. Rider

Compliments of www.nucow.com

MODEL 6295-2,
Ch. 528.6295-2

ALIGNMENT PROCEDURE

Volume control—Maximum, all adjustments.

No signal applied to antenna.

Power input—6.3 volts.

Connect dummy antenna in series with output lead of signal generator.

Connect output meter across voice coil.

Connect ground lead of signal generator to chassis.

Repeat alignment procedure as a final check.

The following equipment is necessary for proper alignment:

Signal generator that will provide the test frequencies as listed, modulated 400 cycles, 30%.

Non-metallic screwdriver.

Output meter. (1.8 volt for 1 watt output.)

Dummy antennas—.1 MFD., 75 MMFD., 30 MMFD.

For alignment points refer to Figures 13 and 14.

Slug Position	Generator Frequency	Dummy Ant.	Generator Connections	Trimmer Reference	Trimmer Adjustment	Trimmer Function
Fully Out	262 KC	.1 MFD.	6BE6 Grid	T2	Maximum	Output I.F.
Fully Out	262 KC	.1 MFD.	6BE6 Grid	T1	Maximum	Input I.F.
Fully Out	1610 KC	*	Ant. lead	C9	Maximum	Oscillator
Tune in signal from generator	1400 KC	*	Ant. lead	C3	Maximum	R.F.
Tune in signal from generator	1400 KC	*	Ant. lead	C1	Maximum	Antenna

*30 MMFD across input terminals and 75 MMFD in series with "hot" side of signal generator leads.

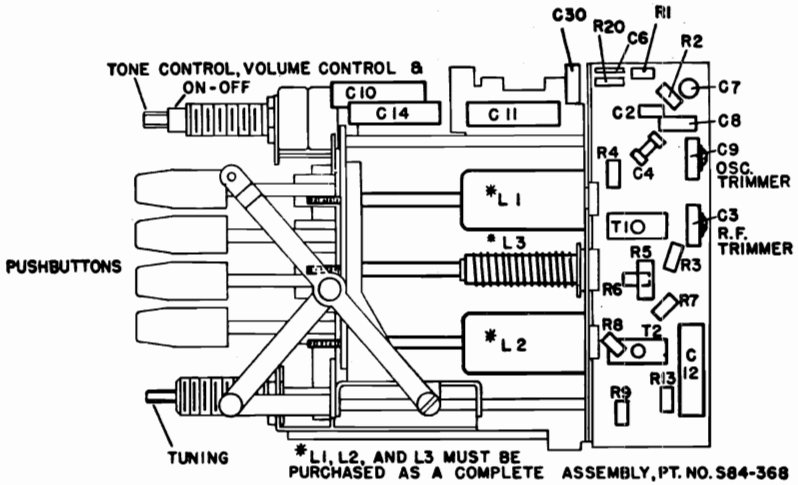

Fig. 13. Control Unit—Bottom View

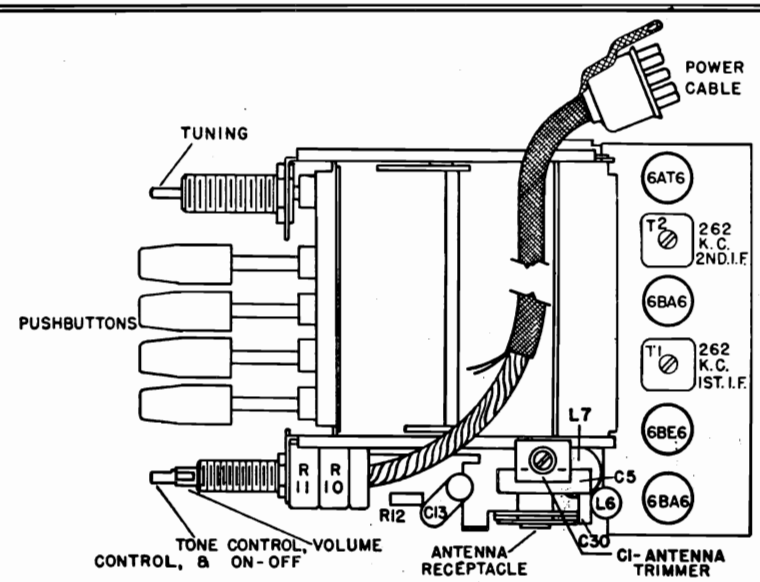

Fig. 14. Control Unit—Top View

©John F. Rider

Compliments of www.nucow.com

MODEL 6295-2,
Ch. 528.6295-2

PARTS LIST

Schematic Location	Part No.	Description
C1	A20-148	Capacitor—antenna trimmer
C2	A15-197	Capacitor—ceramic—10 mmfd.
C3, C9	A20-147	Capacitor—dual trimmer—R.F. and Oscillator
C4	A15-194	Capacitor—ceramic—50 mmfd.
C5	A16-197	Capacitor—.05 mfd.—200 v.
C6, C17, C18	A16-177	Capacitor—ceramic—.005 mfd.
C7	A15-215	Capacitor—ceramic—270 mmfd.
C8	A15-218	Capacitor—silver mica—220 mmfd.
C10, C19	A16-190	Capacitor—.005 mfd.—600 v.
C11, C12	A16-189	Capacitor—.05 mfd.—400 v.
C13, C14	A16-192	Capacitor—.01 mfd.—400 v.
C15		Capacitor—spark plate
C21, C28	A16-184	Capacitor—.5 mfd.—100 v.
	A18-300	Capacitor—electrolytic
C20		20 mfd.—25 v.
C23		25 mfd.—350 v.
C26		35 mfd.—400 v.
C22	A16-206	Capacitor—.02 mfd.—600 v.
C25	A16-188	Capacitor—.2 mfd.—400 v.
C27	A16-207	Capacitor—.007 mfd.—1600 v.—oil filled
C29	A15-211	Capacitor—ceramic—.01 mfd.
C30	A15-188	Capacitor—mica—100 mmfd.
	B23-157	Cable—power
L1, L2, L3	S84-470	Coil—assembly—including carriage and slugs, etc.
L4	A33-234	Coil—"A" line choke
L5	A33-228	Coil—vibrator hash choke
L6	A10-527	Coil—antenna loading
L7	[redacted]	A60-775 Res.—68K—½ watt
	A83-421	Clip—I.F. transformer mounting
R10, R11, S1	A24-183	Control—dual—ON-OFF-VOLUME and TONE
	B67-547	Dial scale
	A43-10	Fuse—15 amp.—3AG
	A47-115	Grommet—rubber—power cable
	S84-233	Kit—"A" lead assembly
	B52-296	Knob—Tuning
	B52-297	Knob—Volume
	B52-298	Knob—Tone
	A89-7	Lamp—pilot—No. 47 Bayonet
R1	A60-770	Resistor—470 ohm—½ watt
R2	A60-760	Resistor—10K ohm—½ watt
R3	A60-668	Resistor—1 megohm—½ watt
R4	A60-744	Resistor—22K ohm—½ watt
R5	A60-773	Resistor—22K ohm—1 watt
R6	A60-753	Resistor—220 ohm—½ watt
R7, R20	A60-726	Resistor—2.2 megohm—½ watt
R8	A60-730	Resistor—47K ohm—½ watt
R9	A60-728	Resistor—10 megohm—½ watt
R12	A60-775	Resistor—68K ohm—½ watt
R13	A60-672	Resistor—220K ohm—½ watt
R14	A60-694	Resistor—470 ohm—1 watt
R15	A60-754	Resistor—270 ohm—1 watt
R16	A60-731	Resistor—470K ohm—½ watt
R17	A60-698	Resistor—10K ohm—1 watt
R18, R19	A60-752	Resistor—100 ohm—½ watt
	A83-646	Retainer—dial scale—left
	A83-647	Retainer—dial scale—right
	C79-387	*Speaker—7" round
	C79-386	*Speaker—6"x9" oval
	S84-383	Transformer—output—with cable and plug
T1	A10-537	Transformer—I.F. No. 1
T2	A10-540	Transformer—I.F. No. 2
T3	C80-258	Transformer—power
	A34-105	Vibrator—Mallory No. 659

Mechanical Tuner Parts

A56-141	Pusher nut—manual tuning
A56-152	Pusher nut—pushbutton tuning
A75-75	Pusher rod—manual tuning
S84-355	Pushbutton and rod assembly

IMPORTANT: All tubular condensers must be high temperature (85°C.) wax type.

*When ordering a replacement speaker, order the same type, 7" round or 6"x9" oval, as the old one that was installed in your car.

©John F. Rider

Compliments of www.nucow.com

MODEL 6297-1,
Ch. 528.6297-1

DESCRIPTION

Your new automobile receiver is a 5-tube (plus rectifier) superheterodyne, designed to operate from the 6 volt storage battery in your car. It is a universal type of receiver for mounting underneath the dash panel. It has a self-contained PM speaker, and covers the frequency range 540 to 1600 K.C. Two simple controls are provided for operating the receiver. (see fig. 1).

Special care has been taken in the design of this receiver to insure the finest in sensitivity and selectivity, there-by insuring good reception of even distant or weak stations. The unit is simple to install, the antenna input circuit adjustable to permit the use of any two or three section whip or "fish pole" antenna.

OPERATION

To turn the receiver on, rotate the volume control and switch knob (left hand knob) to the right about half its range. After allowing about 30 seconds for the tubes to warm up, the desired station may be tuned by rotating the tuning control (right hand knob) to the desired frequency. The dial scale is calibrated in kilocycles minus the final two zeros. After the station has been properly tuned, the volume may be adjusted by means of the volume control knob. To increase the volume, turn the control to the right; to decrease the volume, turn it to the left. Turning this control to the left as far as it will go, turns the radio off.

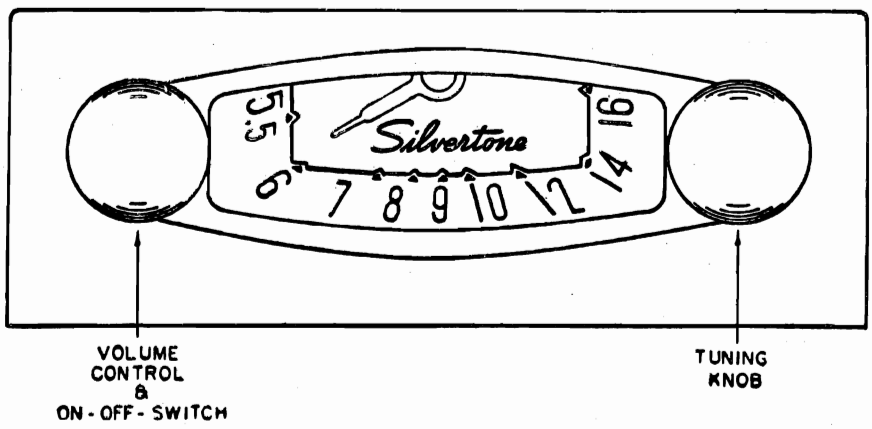

Fig. 1 Front View

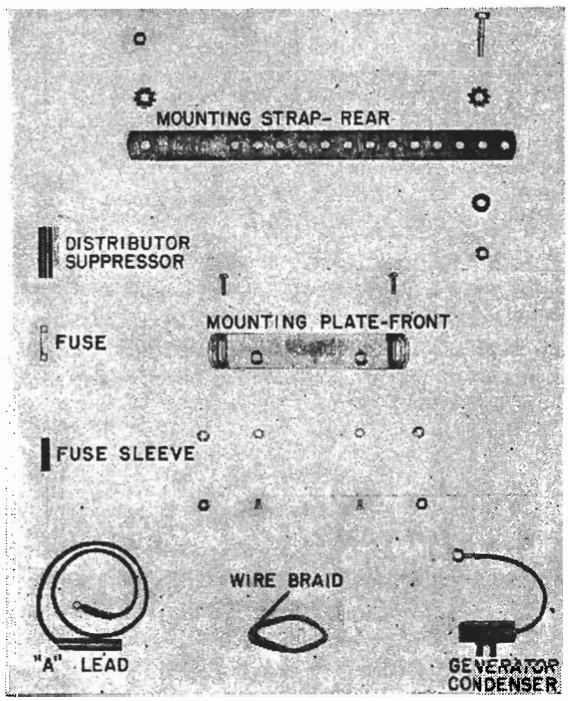

Fig 2

DIAL POINTER ADJUSTMENT

If it should become necessary to readjust the dial pointer for correct calibration, this may be easily done without removing the radio from the car by proceeding as follows:

A. Turn tuning knob to the right (clockwise) as far as it will go.

B. Remove snap button located on the right side of the case (viewed from the front), in the extreme upper front corner.

C. Insert screwdriver through hole in case and move dial pointer directly over white dot at high end of dial (1600KC).

D. Tune receiver to station of known frequency in the center of the dial and readjust pointer for more accurate indication, if necessary.

E Replace snap button into hole in case.

CAUTION: Be careful not to scratch or damage dial scale or dial pointer when making this adjustment

©John F. Rider

Compliments of www.nucow.com

MODEL 6297-1,
Ch. 528.6297-1

INSTALLATION

This radio comes to you complete with all hardware necessary for mounting, and also with a distributor suppressor, and generator condenser. By referring to Figures 2 and 3, and following the instructions outlined below, you will find that it is very simple to install.

First determine where the receiver is to be mounted by holding it with the hands in the approximate location in the car. Using the front mounting bracket as a template, mark and drill two 7/32" holes in the instrument panel flange. Now secure the mounting bracket to the radio receiver with the screws provided, and then mount the front of the radio to the instrument panel, using the bolts, lock washers and nuts provided for this purpose. The back of the radio is supported by means of the rear mounting strap. The mounting strap should be formed by bending to the correct angles, as illustrated in Figure 3, so that it can then be fastened to the fire wall. After marking and center-punching the fire wall at the correct location, drill with a 3/8" drill. The mounting strap is then secured to the radio and fastened to the fire wall of the car with the 1/4" bolt, lock washer and nut furnished with the receiver.

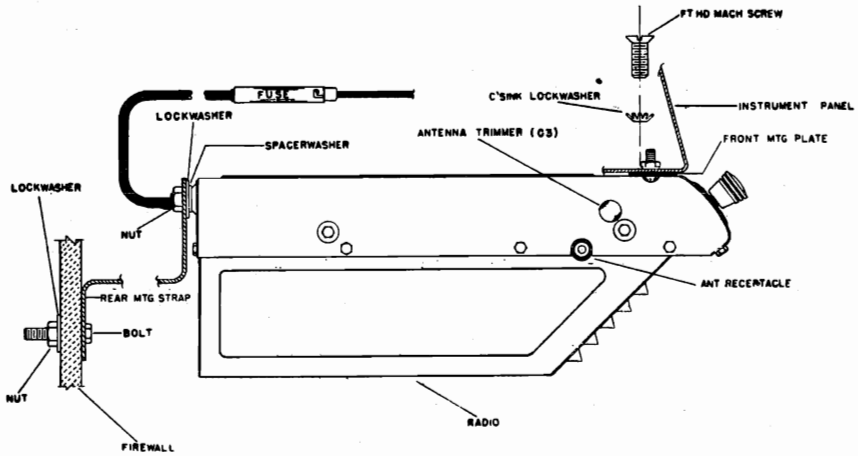

Fig.3 Side View, Showing Mounting

CONNECTING THE RADIO

The antenna cable should be connected to the radio by inserting the jack into the socket provided on the side of the radio. Connect the battery cable to the hot side of the ammeter behind the instrument panel. The fuse should then be inserted into the cable receptor.

FINAL ADJUSTMENTS

The input circuit has been especially designed to be used with a low capacity antenna, of the fish pole or whip type.

To adjust the antenna trimmer condenser, carefully tune the receiver to a weak station at approximately 1100 kilocycles (K.C.). Remove the snap button covering the antenna trimmer (See Figure 3) and adjust the trimmer for maximum volume. A small screw driver will be needed for this purpose.

ACCESSORIES FURNISHED FOR INSTALLATION

All of the parts that are needed for installing this receiver are furnished in the Mounting Parts Kit, part No. S84-192, and the Suppression and Misc. Parts Kit, part No. S84-407, as listed below. Also supplied are the rear mounting strap, part No. B31-134, and the front mounting plate, part No. A31-138.

S84-192 MOUNTING PARTS KIT

- 1 1/4" Bolt
- 2 1/4" Lock Washers
- 2 1/4" Hexagon Nuts
- 2 10-32 x 5/8" Screws
- 2 10-32 x 3/8" Screws
- 2 External Tooth Lock Washers
- 2 Internal Tooth Lock Washers
- 2 10-32 Hexagon Nuts
- 1 Washer-Spacer

S84-407 SUPPRESSION KIT & MISC. PARTS

- 1 S84-233 "A" lead assem.
- 1 A43-10 Fuse
- 2 A52-300 Control Knobs
- 1 A81-13 Sleeve (for fuse)
- 1 S84-322 Suppression Kit consisting of:
  - 1 .5 MFD Condenser
  - 1 Distributor Suppressor
  - 20" Wire Braid

©John F. Rider

Compliments of www.nucow.com

MODEL 6297-1,
Ch. 528.6297-1

ELIMINATING MOTOR NOISE

IMPORTANT: Special care should be taken when mounting the radio to make sure all paint, grease, rust, etc., is removed from all three mounting points. A good electrical contact at these points will aid materially in eliminating motor noise.

GENERATOR CONDENSER

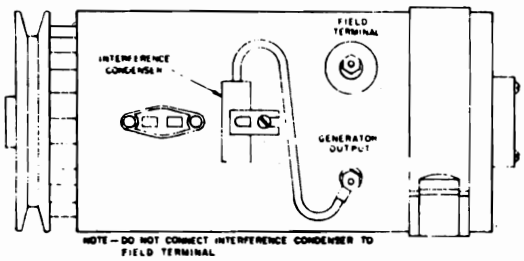

The generator condenser must be connected to the battery terminal of the generator in all cases. If your car is equipped with a generator using an automatic regulator, make sure the condenser IS NOT fastened to the field winding terminal. If in doubt, your local car dealer can advise you as to where the car manufacturer recommends connecting it.

DISTRIBUTOR SUPPRESSOR

Remove from distributor cap the high tension lead from coil to distributor. Cut the lead two inches from the end, and screw the distributor resistor on to the coil lead, then screw the short length into the resistor and plug the cable into the distributor cap.

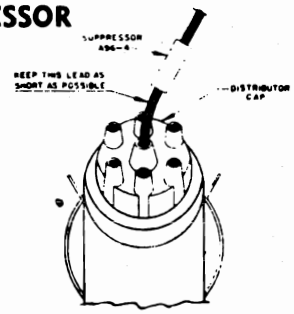

NOTE

In most cases the use of the generator condenser and the distributor suppressor will eliminate all objectionable ignition interference. However, if further reduction of noise is found to be desirable, it is suggested that a .5 MFD. condenser, (similar to the one used on the generator), be connected from either side of the ammeter to a good ground.

ELECTRICAL ACCESSORIES

In some cases, it may be found that car accessories such as electric heaters, lighters, automatic relays, or gauges, may cause interference while in operation. Proper procedure in such cases is to try another by-pass condenser from ground to the suspected accessory until the source of the interference is found. The condenser then should be permanently mounted in this location.

HIGH AND LOW TENSION LEADS

In many cases the low tension battery leads, etc., are grouped together with the high tension wires. These wires will very often pick up motor noise and feed it into the receiver through the battery circuit. In cases such as these it will be necessary to separate the low tension from the high tension wires and run them through another hole if they run from the engine compartment up to the instrument panel. This condition is particularly true on the V-8 Ford, as the battery and primary leads run through a special tube which also houses the high tension leads. Shield and ground these leads.

IGNITION COILS

In cars where the ignition coil is located on the back side of the instrument panel it is often necessary to use an additional condenser. It must be installed from the battery side of the ignition coil to the closest ground on the instrument panel.

Short leads are very important. Where coils are mounted either on the instrument panel or in the driver's compartment, it may be necessary to shield the high tension lead from the coil to the distributor.

WHEEL STATIC

Wheel Static is a form of interference caused by the rotation of the front wheels of the car, and it is, of course, only noticed when the car is in motion. If this form of interference is present it can be eliminated by installing wheel static collector springs between the inner hub cap and the spindle shaft.

BONDING OF STEERING COLUMN TO BODY

Bonding the steering column to the fire wall with a short braid may also be effective. Clean the paint from the steering column at the fire wall where the column enters the motor compartment, and solder on a short piece of braid. Ground the end of the braid to the fire wall.

In some cases it may be necessary to ground the tubes and rods coming through the fire wall in order to reduce the interference. Clean them with emery cloth and spot-solder the braid, fastening the end under a convenient screw. A 1/4" piece of wire braid 20 inches long is furnished in the suppression kit assembly for this purpose.

©John F. Rider

Compliments of www.nucow.com

MODEL 6297-1,
Ch. 528.6297-1

SERVICE DATA

ELECTRICAL SPECIFICATIONS

Power Supply.....6.3 volts DC
Current .....6.2 amp. average
Frequency Range.....540 to 1600 KC
I. F. Frequency.....455 KC
Speaker.....4" P. M.
Power Output.....1.2 watts, undistorted
2.5 watts, maximum
Sensitivity.....10 microvolt average for 1 watt output
Selectivity...50 KC broad at 1000 times signal, at 1000 KC

This receiver contains the following:

1—6SK7GT—R. F. Amplifier.

1—6SA7GT—Converter.

1—6SK7GT—I.F. Amplifier.

1—6SQ7—Detector—AVC—1st audio.

1—6V6GT—Power output.

A 6X5GT Rectifier is used.

SERVICE NOTES

Voltages taken from the different points of the circuit to the chassis are measured with volume control in maximum position, all tubes and the rectifier in their sockets, no signal applied, and with a volt meter having a resistance of 20,000 ohms per volt. These voltages are clearly shown on the voltage diagram (Fig. 4).

All voltages should be measured with an input voltage of 6.3 volts DC.

To check for open by-pass condensers, shunt each condenser with another one having the same capacity and voltage rating which is known to be good until the defective unit is located.

ALIGNING INSTRUCTION

Never attempt any adjustments on this receiver unless it becomes necessary to replace a coil or transformer, or the adjustments have been tampered with in the field. Always make certain that other circuit components, such as tubes, rectifier, condensers, resistors, etc., are normal before proceeding with realignment.

If realignment is necessary follow the instructions given under the heading "ALIGNMENT PROCEDURE". After realignment has been completed repeat the procedure as a final check.

INSTRUCTIONS FOR REMOVING CHASSIS FROM THE CASE

The bottom cover (the one with the speaker louvers) can be removed to permit servicing of major components, such as tubes, rectifier and vibrator, by removing the eight (8) screws holding it to the top cover. There are three (3) screws on each side, one (1) in the rear, and one (1) in the front.

CAUTION: Before attempting to remove the top cover, to service condensers, resistors, etc., the screw connecting the spark plate to the "A" terminal (inside case) must be removed. This is a round head screw, and is located on the rear of the case, close to the mounting stud bolt. It is recessed in a ½ inch hole in the case itself, thereby permitting contact with the spark plate.

After removing the spark plate screw, remove the two knobs by pulling forward and remove the eight (8) screws securing the cover to the chassis. Lift the chassis at the rear, at the same time moving it away from the front of the case so that the volume and tuning shafts will clear the holes in the cover.

NOTE: When reinstalling the chassis into the case, be sure the screw connecting the spark plate to the "A" terminal (inside case) is tightened very securely, otherwise the receiver will not operate properly.

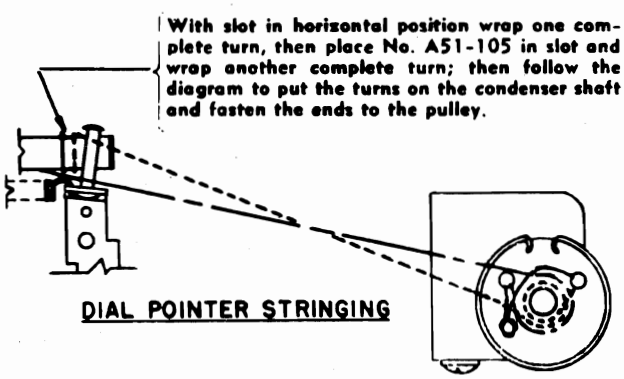

DIAL POINTER STRINGING

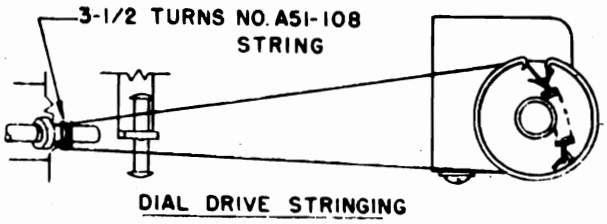

DIAL DRIVE STRINGING

©John F. Rider

Compliments of www.nucow.com

ALIGNMENT PROCEDURE

Volume control—Maximum, all adjustments.

No signal applied to antenna.

Power input—6.3 volts.

Connect dummy antenna in series with output lead of signal generator.

Connect output meter across voice coil.

Connect ground lead of signal generator to chassis.

Repeat alignment procedure as a final check.

The following equipment is necessary for proper alignment:

Signal generator that will provide the test frequencies as listed, modulated 400 cycles, 30%.

Non-metallic screwdriver.

Output meter. (1.8 volt for 1 watt output.)

Dummy antennas—.1 MFD., 75 MMFD.

For alignment points refer to Figures 5 and 6.

Dial Setting	Generator Frequency	Dummy Ant.	Generator Connections	Trimmer Reference	Trimmer Adjustment	Trimmer Function
Fully Open	455 KC	.1 MFD.	6SA7 Grid	T2	Maximum	Output I.F.
Fully Open	455 KC	.1 MFD.	6SA7 Grid	T1	Maximum	Input I.F.
Fully Open	1600 KC	75 MMFD.	Ant. lead	C1B	Maximum	Oscillator
Tune in signal from generator	1400 KC	75 MMFD	Ant. lead	C1A	Maximum	Antenna

NOTE: The antenna trimmer condenser, C3, (see Fig. 3) should be adjusted after the radio is installed in the car. Tune the receiver to a weak station at about 1100 KC and adjust this trimmer for maximum volume.

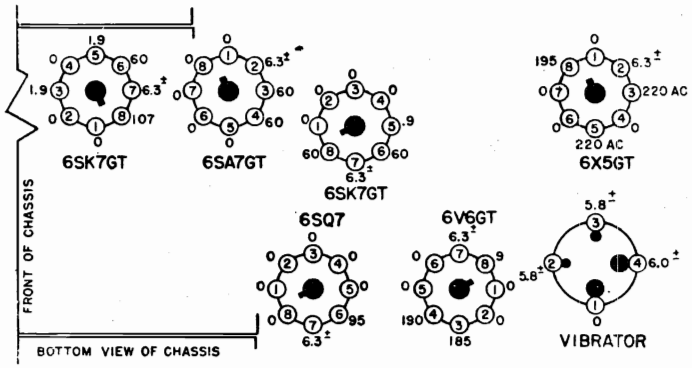

Fig.4. Socket Voltages

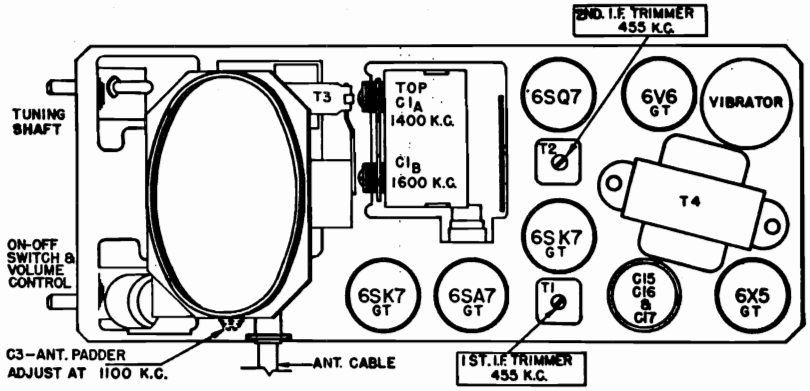

Fig. 5. Tube, Rectifier and Trimmer Locations

©John F. Rider

Compliments of www.nucow.com

MODEL 6297-1,
Ch. 528.6297-1

PARTS LIST

Schematic Diagram Reference	Part No.	Description
		CONDENSERS
C1A, C1B	B19-201	Variable condenser
C2, C14	A16-192	.01 MFD 400 volt condenser
C3	A20-145	Trimmer condenser
C4	A16-189	.05 MFD 400 volt condenser
C5	A15-196	100 MMFD ceramic condenser
C7	A15-204	50 MMFD ceramic condenser
C8	A15-205	12 MMFD ceramic condenser, temp. comp.
C9	A16-187	.1 MFD 400 volt condenser
C10	A15-176	250 MMFD mica condenser
C11	A16-190	.005 MFD 600 volt condenser
C12	A16-195	.001 MFD ceramic condenser
C13	A16-193	.05 MFD 600 volt condenser
C15	A18-289	20 MFD 25 volt electrolytic condenser
C16	A18-289	20 MFD 350 volt electrolytic condenser
C17	A18-289	30 MFD 350 volt electrolytic condenser
C19, C20	A16-184	.5 MFD 100 volt condenser
C21	A16-185	.005 MFD 1600 volt oil filled condenser
		RESISTORS
R1, R3	A60-659	22K ohm ½ watt 20% resistor
R2	A60-685	47K ohm ½ watt 20% resistor
R4	A60-769	7.5K ohm 2 watt 10% resistor
R5	A60-726	2.2 megohm ½ watt 20% resistor
R6	A24-177	Volume control, 500,000 ohm, with switch
R7	A60-728	10 megohm ½ watt 20% resistor
R8, R15	A60-758	560 ohm ½ watt 10% resistor
R9	A60-667	220K ohm ½ watt 20% resistor
R10	A60-731	470K ohm ½ watt 20% resistor
R11	A60-771	270 ohm ½ watt 10% resistor
R12	A60-770	470 ohm ½ watt 10% resistor
R13, R14	A60-752	100 ohm ½ watt 10% resistor
		COILS AND TRANSFORMERS
L1	A10-527	Antenna Loading Coil
L2	B10-511	Antenna Coil
L4	A10-512	Oscillator Coil
L5	A33-229	Choke, "A" Line
L6	A33-228	Choke, vibrator hash
T1	A10-508	1st I.F. Transformer
T2	A10-509	2nd I.F. Transformer
T3	B80-242	Output Transformer (Part of Speaker, not furnished separately)
T4	B80-243	Power transformer
		DIAL PARTS
	A11-303	Bracket, Dial Scale
	B11-328	Bracket, String Guide
	A72-29	Bushing, Tuning Shaft Bearing
	A70-130	Clip, Spring, for Tuning Shaft
	A58-55	Dial Pointer
	B67-545	Dial Scale
	A28-101	Gasket for Speaker
	A52-300	Knob
	A11-329	Link, String Guide
	A89-10	Pilot Light, No. 47 Bayonet
	A65-37	Rivet, Shoulder, for Dial Pointer Stringing
	A65-42	Rivet, Shoulder, for String Guide Brkt. and Link
	A65-12	Rivet, Shoulder, for Dial Drive Stringing
	A75-70	Shaft, tuning
	A75-74	Shaft, for Dial Pointer
	A70-132	Spring, for Pilot Light Socket
	A70-135	Spring, Dial Drive String Tension
	A70-142	Spring, Pointer Drive String Tension
	A51-105	String, Pointer Travel, 17"
	A51-108	String, Condenser Drive, 19"

©John F. Rider

Compliments of www.nucow.com

MODEL 6297-1,
Ch. 528.6297-1

MISCELLANEOUS

S84-233	"A" lead assembly
A83-421	Clip, I.F. Transformer Mounting
A83-517	Clip, Oscillator Coil Mounting
A43-10	Fuse, 15 Amp.
A47-112	Grommet, rubber, (Spkr. & Gang mounting)
B31-134	Mounting strap, rear
A31-138	Mounting Plate, Front
S84-192	Mounting parts kit
A87-38	Receptacle, Antenna Cable
B79-379	Speaker, 4" P.M. (includes Output Transformer)
S84-322	Suppression Kit Assembly
A34-105	Vibrator
A83-519	Wiper, grounding, for case covers

Note: Tubular condensers must be high temperature (85°C) wax type.

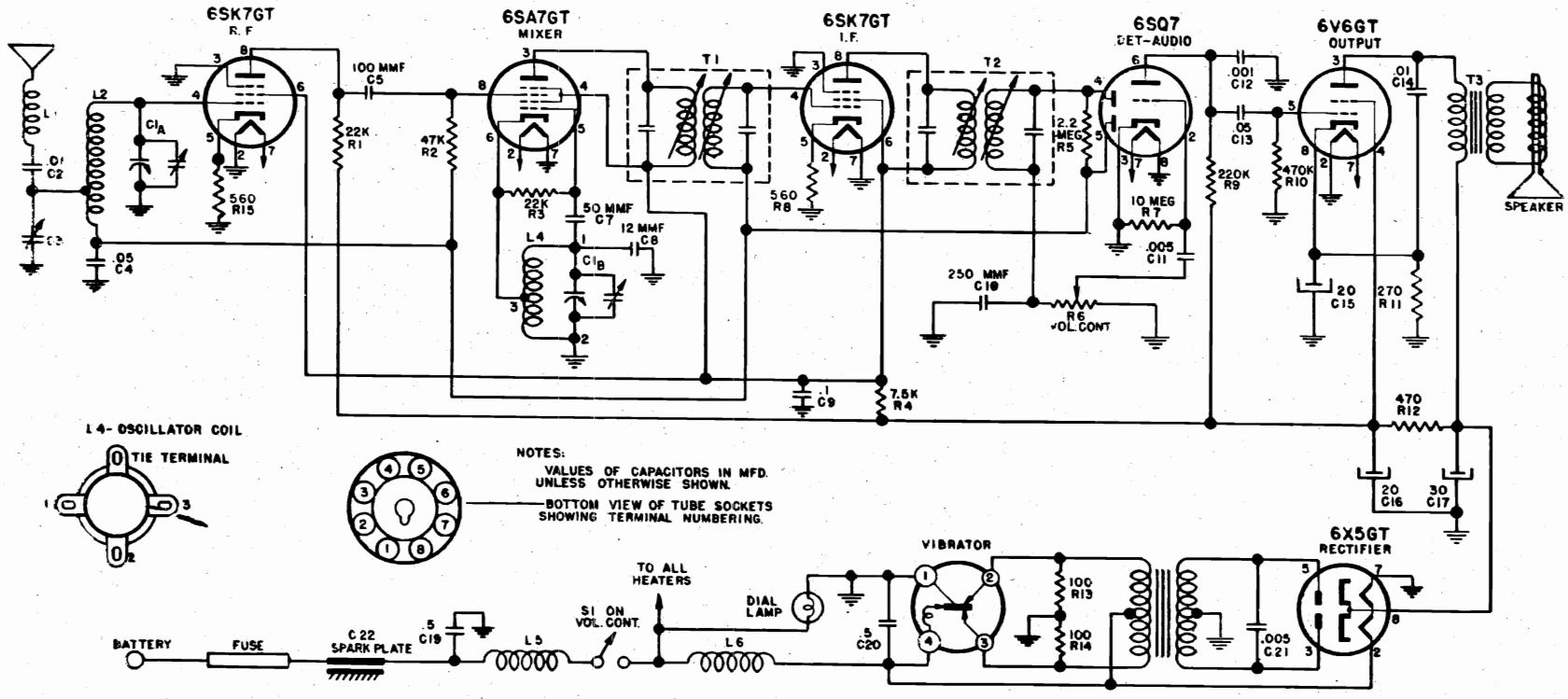

Fig 6. Schematic Diagram

©John F. Rider

Compliments of www.nucow.com

MODEL 6297-2,
Ch. 528.6297-2

DESCRIPTION

Your new automobile receiver is a 5-tube (plus rectifier) superheterodyne, designed to operate from the 6 volt storage battery in your car. It is a universal type of receiver for mounting underneath the dash panel. It has a self-contained PM speaker, and covers the frequency range 540 to 1600 K.C. Two simple controls are provided for operating the receiver. (see fig. 1).

Special care has been taken in the design of this receiver to insure the finest in sensitivity and selectivity, there-by insuring good reception of even distant or weak stations. The unit is simple to install, the antenna input circuit adjustable to permit the use of any two or three section whip or "fish pole" antenna.

OPERATION

To turn the receiver on, rotate the volume control and switch knob (left hand knob) to the right about half its range. After allowing about 30 seconds for the tubes to warm up, the desired station may be tuned by rotating the tuning control (right hand knob) to the desired frequency. The dial scale is calibrated in kilocycles minus the final two zeros. After the station has been properly tuned, the volume may be adjusted by means of the volume control knob. To increase the volume, turn the control to the right; to decrease the volume, turn it to the left. Turning this control to the left as far as it will go, turns the radio off.

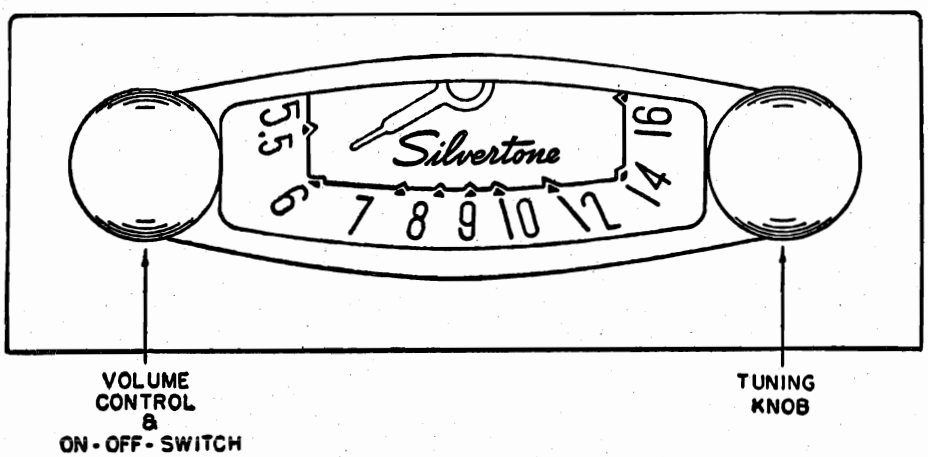

Fig. 1 Front View

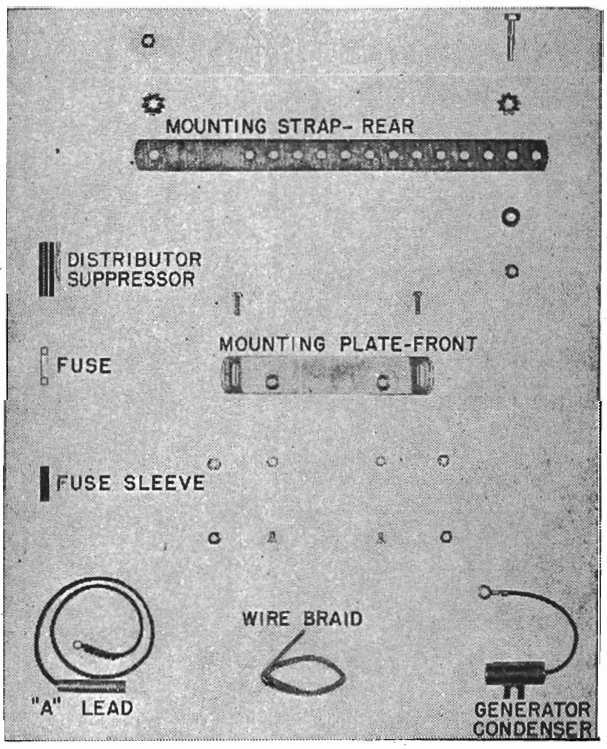

Fig. 2

DIAL POINTER ADJUSTMENT

If it should become necessary to readjust the dial pointer for correct calibration, this may be easily done without removing the radio from the car by proceeding as follows:

A. Turn tuning knob to the right (clockwise) as far as it will go.

B. Remove snap button located on the right side of the case (viewed from the front), in the extreme upper front corner.

C. Insert screwdriver through hole in case and move dial pointer directly over white dot at high end of dial (1600KC).

D. Tune receiver to station of known frequency in the center of the dial and readjust pointer for more accurate indication, if necessary.

E. Replace snap button into hole in case.

CAUTION: Be careful not to scratch or damage dial scale or dial pointer when making this adjustment.

©John F. Rider

Compliments of www.nucow.com

MODEL 6297-2,
Ch. 528.6297-2

INSTALLATION

This radio comes to you complete with all hardware necessary for mounting, and also with a distributor suppressor, and generator condenser. By referring to Figures 2 and 3, and following the instructions outlined below, you will find that it is very simple to install.

First determine where the receiver is to be mounted by holding it with the hands in the approximate location in the car. Using the front mounting bracket as a template, mark and drill two 7/32" holes in the instrument panel flange. Now secure the mounting bracket to the radio receiver with the screws provided, and then mount the front of the radio to the instrument panel, using the bolts, lock washers and nuts provided for this purpose. The back of the radio is supported by means of the rear mounting strap. The mounting strap should be formed by bending to the correct angles, as illustrated in Figure 3, so that it can then be fastened to the fire wall. After marking and center-punching the fire wall at the correct location, drill with a 3/8" drill. The mounting strap is then secured to the radio and fastened to the fire wall of the car with the 1/4" bolt, lock washer and nut furnished with the receiver.

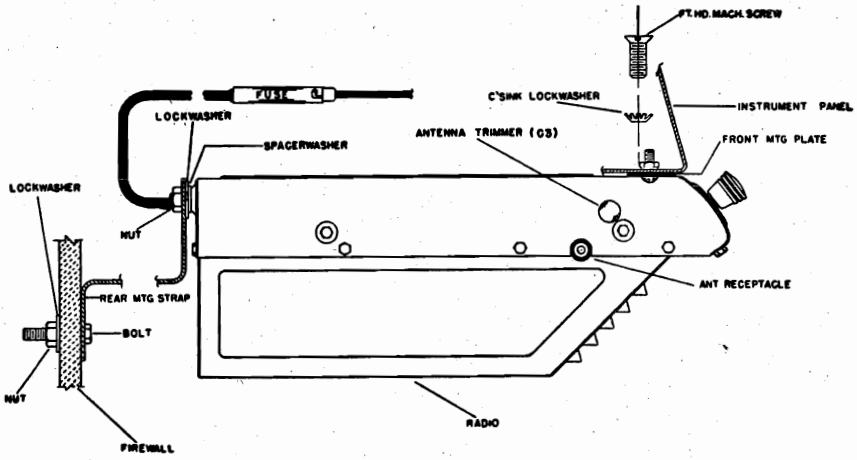

Fig.3. Side View, Showing Mounting

CONNECTING THE RADIO

The antenna cable should be connected to the radio by inserting the jack into the socket provided on the side of the radio. Connect the battery cable to the hot side of the ammeter behind the instrument panel. The fuse should then be inserted into the cable receptor.

FINAL ADJUSTMENTS

The input circuit has been especially designed to be used with a low capacity antenna, of the fish pole or whip type.

To adjust the antenna trimmer condenser, carefully tune the receiver to a weak station at approximately 1100 kilocycles (K.C.). Remove the snap button covering the antenna trimmer (See Figure 3) and adjust the trimmer for maximum volume. A small screw driver will be needed for this purpose.

ACCESSORIES FURNISHED FOR INSTALLATION

All of the parts that are needed for installing this receiver are furnished in the Mounting Parts Kit, part No. S84-192, and the Suppression and Misc. Parts Kit, part No. S84-407, as listed below. Also supplied are the rear mounting strap, part No. B31-134, and the front mounting plate, part No. A31-138.

S84-192 MOUNTING PARTS KIT

- 1 1/4" Bolt
- 2 1/4" Lock Washers
- 2 1/4" Hexagon Nuts
- 2 10-32 x 5/8" Screws
- 2 10-32 x 3/8" Screws
- 2 External Tooth Lock Washers
- 2 Internal Tooth Lock Washers
- 2 10-32 Hexagon Nuts
- 1 Washer-Spacer

S84-407 SUPPRESSION KIT & MISC. PARTS

- 1 S84-233 "A" lead assem.
- 1 A43-10 Fuse
- 2 A52-300 Control Knobs
- 1 A81-13 Sleeve (for fuse)
- 1 S84-322 Suppression Kit consisting of:
  - 1—.5 MFD Condenser
  - 1 Distributor Suppressor
  - 20" Wire Braid

©John F. Rider

Compliments of www.nucow.com

MODEL 6297-2,
Ch. 528.6297-2

ELIMINATING MOTOR NOISE

IMPORTANT: Special care should be taken when mounting the radio to make sure all paint, grease, rust, etc., is removed from all three mounting points. A good electrical contact at these points will aid materially in eliminating motor noise.

GENERATOR CONDENSER

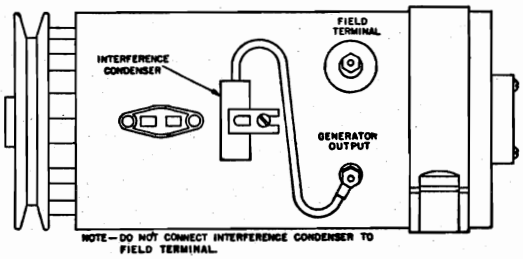

The generator condenser must be connected to the battery terminal of the generator in all cases. If your car is equipped with a generator using an automatic regulator, make sure the condenser IS NOT fastened to the field winding terminal. If in doubt, your local car dealer can advise you as to where the car manufacturer recommends connecting it.

DISTRIBUTOR SUPPRESSOR

Remove from distributor cap the high tension lead from coil to distributor. Cut the lead two inches from the end, and screw the distributor resistor on to the coil lead, then screw the short length into the resistor and plug the cable into the distributor cap.

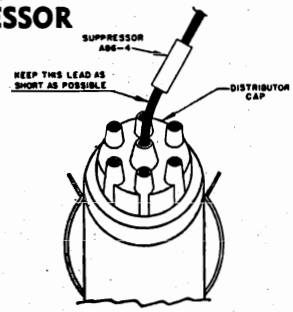

NOTE

In most cases the use of the generator condenser and the distributor suppressor will eliminate all objectionable ignition interference. However, if further reduction of noise is found to be desirable, it is suggested that a .5 MFD. condenser, (similar to the one used on the generator), be connected from either side of the ammeter to a good ground.

ELECTRICAL ACCESSORIES

In some cases, it may be found that car accessories such as electric heaters, lighters, automatic relays, or gauges, may cause interference while in operation. Proper procedure in such cases is to try another by-pass condenser from ground to the suspected accessory until the source of the interference is found. The condenser then should be permanently mounted in this location.

HIGH AND LOW TENSION LEADS

In many cases the low tension battery leads, etc., are grouped together with the high tension wires. These wires will very often pick up motor noise and feed it into the receiver through the battery circuit. In cases such as these it will be necessary to separate the low tension from the high tension wires and run them through another hole if they run from the engine compartment up to the instrument panel. This condition is particularly true on the V-8 Ford, as the battery and primary leads run through a special tube which also houses the high tension leads. Shield and ground these leads.

IGNITION COILS

In cars where the ignition coil is located on the back side of the instrument panel it is often necessary to use an additional condenser. It must be installed from the battery side of the ignition coil to the closest ground on the instru-instrument panel.

Short leads are very important. Where coils are mounted either on the instrument panel or in the driver's compartment, it may be necessary to shield the high tension lead from the coil to the distributor.

WHEEL STATIC

Wheel Static is a form of interference caused by the rotation of the front wheels of the car, and it is, of course, only noticed when the car is in motion. If this form of interference is present it can be eliminated by installing wheel static collector springs between the inner hub cap and the spindle shaft.

BONDING OF STEERING COLUMN TO BODY

Bonding the steering column to the fire wall with a short braid may also be effective. Clean the paint from the steering column at the fire wall where the column enters the motor compartment, and solder on a short piece of braid. Ground the end of the braid to the fire wall.

In some cases it may be necessary to ground the tubes and rods coming through the fire wall in order to reduce the interference. Clean them with emery cloth and spot-solder the braid, fastening the end under a convenient screw. A 1/4" piece of wire braid 20 inches long is furnished in the suppression kit assembly for this purpose.

©John F. Rider

Compliments of www.nucow.com

MODEL 6297-2,
Ch. 528.6297-2

ELECTRICAL SPECIFICATIONS

Power Supply.....6.3 volts DC
Current .....6.2 amp. average
Frequency Range.....540 to 1600 KC
I. F. Frequency.....455 KC
Speaker.....4" P. M.
Power Output.....1.2 watts, undistorted
2.5 watts, maximum
Sensitivity.....10 microvolt average for 1 watt output
Selectivity...50 KC broad at 1000 times signal, at 1000 KC

This receiver contains the following:

1—6SK7GT—R. F. Amplifier.

1—6SA7GT—Converter.

1—6SK7GT—I.F. Amplifier.

1—6SQ7—Detector—AVC—1st audio

1—6V6GT—Power output.

A 6X5GT Rectifier is used.

SERVICE NOTES

Voltages taken from the different points of the circuit to the chassis are measured with volume control in maximum position, all tubes and the rectifier in their sockets, no signal applied, and with a volt meter having a resistance of 20,000 ohms per volt. These voltages are clearly shown on the voltage diagram (Fig. 4).

All voltages should be measured with an input voltage of 6.3 volts DC.

To check for open by-pass condensers, shunt each condenser with another one having the same capacity and voltage rating which is known to be good until the defective unit is located.

ALIGNING INSTRUCTION

Never attempt any adjustments on this receiver unless it becomes necessary to replace a coil or transformer, or the adjustments have been tampered with in the field. Always make certain that other circuit components, such as tubes, rectifier, condensers, resistors, etc., are normal before proceeding with realignment.

If realignment is necessary follow the instructions given under the heading "ALIGNMENT PROCEDURE". After realignment has been completed repeat the procedure as a final check.

INSTRUCTIONS FOR REMOVING CHASSIS FROM THE CASE

The bottom cover (the one with the speaker louvers) can be removed to permit servicing of major components, such as tubes, rectifier and vibrator, by removing the eight (8) screws holding it to the top cover. There are three (3) screws on each side, one (1) in the rear, and one (1) in the front.

CAUTION: Before attempting to remove the top cover, to service condensers, resistors, etc., the screw connecting the spark plate to the "A" terminal (inside case) must be removed. This is a round head screw, and is located on the rear of the case, close to the mounting stud bolt. It is recessed in a ½ inch hole in the case itself, thereby permitting contact with the spark plate.

After removing the spark plate screw, remove the two knobs by pulling forward and remove the eight (8) screws securing the cover to the chassis. Lift the chassis at the rear, at the same time moving it away from the front of the case so that the volume and tuning shafts will clear the holes in the cover.

NOTE: When reinstalling the chassis into the case, be sure the screw connecting the spark plate to the "A" terminal (inside case) is tightened very securely, otherwise the receiver will not operate properly.

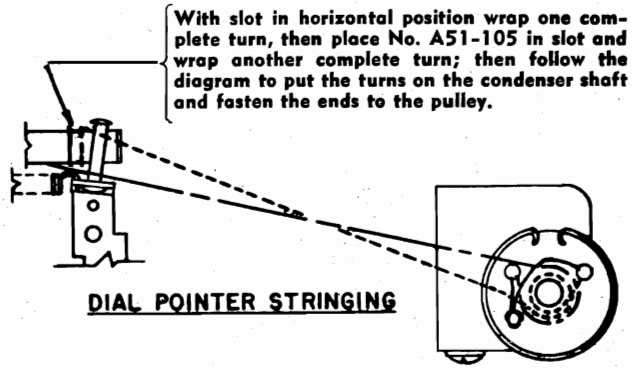

DIAL POINTER STRINGING

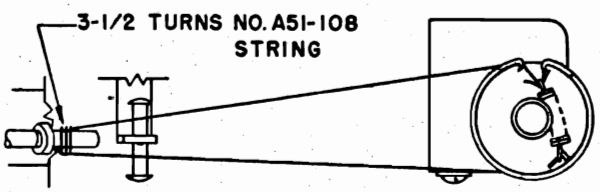

DIAL DRIVE STRINGING

©John F. Rider

Compliments of www.nucow.com

ALIGNMENT PROCEDURE

Volume control—Maximum, all adjustments.

No signal applied to antenna.

Power input—6.3 volts.

Connect dummy antenna in series with output lead of signal generator.

Connect output meter across voice coil.

Connect ground lead of signal generator to chassis.

Repeat alignment procedure as a final check.

The following equipment is necessary for proper alignment:

Signal generator that will provide the test frequencies as listed, modulated 400 cycles, 30%.

Non-metallic screwdriver.

Output meter. (1.8 volt for 1 watt output.)

Dummy antennas—.1 MFD., 75 MMFD.

For alignment points refer to Figures 5 and 6.

Dial Setting	Generator Frequency	Dummy Ant.	Generator Connections	Trimmer Reference	Trimmer Adjustment	Trimmer Function
Fully Open	455 KC	.1 MFD.	6SA7 Grid	T2	Maximum	Output I.F.
Fully Open	455 KC	.1 MFD.	6SA7 Grid	T1	Maximum	Input I.F.
Fully Open	1600 KC	75 MMFD.	Ant. lead	C1B	Maximum	Oscillator
Tune in signal from generator	1400 KC	75 MMFD.	Ant. lead	C1A	Maximum	Antenna

NOTE: The antenna trimmer condenser, C3, (see Fig. 3) should be adjusted after the radio is installed in the car. Tune the receiver to a weak station at about 1100 KC and adjust this trimmer for maximum volume.

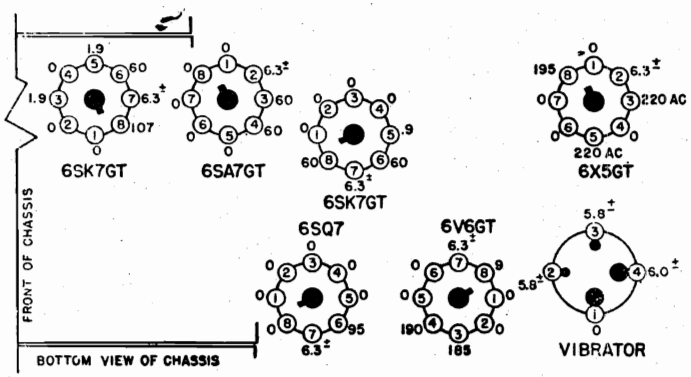

Fig.4. Socket Voltages

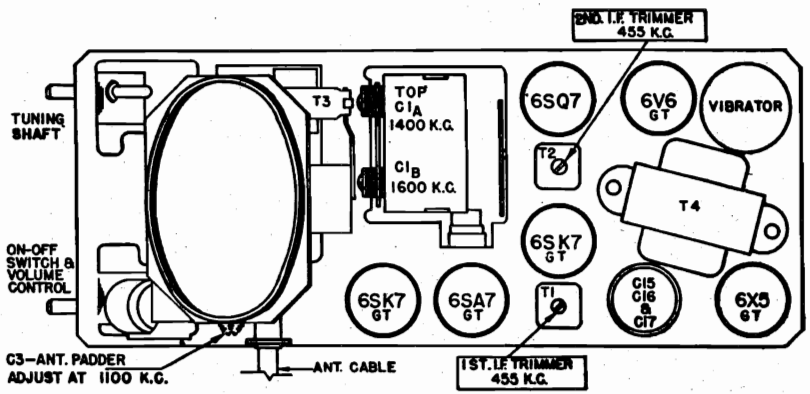

Fig. 5. Tube, Rectifier and Trimmer Locations

©John F. Rider

Compliments of www.nucow.com

MODEL 6297-2,
Ch. 528.6297-2

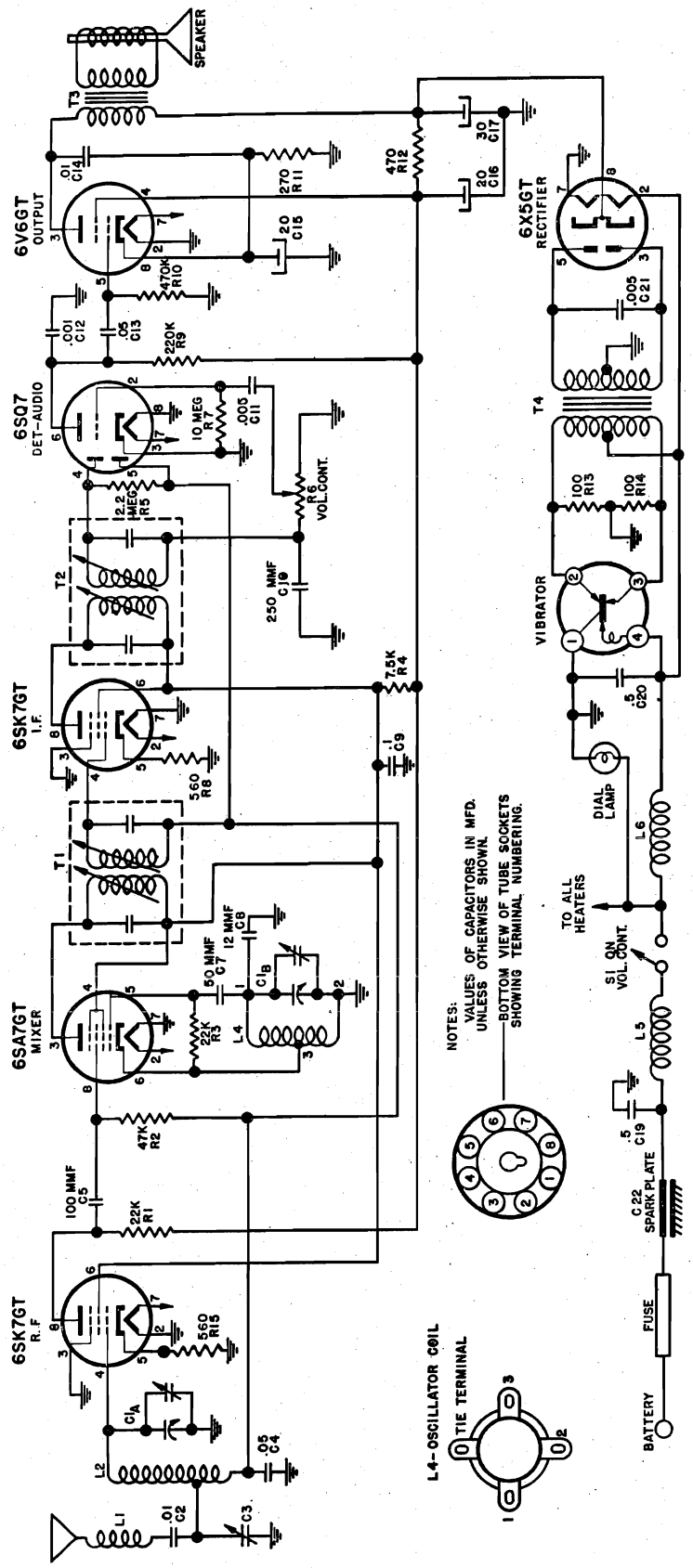

Fig 6. Schematic Diagram

©John F. Rider

Compliments of www.nucow.com

MODEL 6297-2,
Ch. 528.6297-2

Schematic Diagram Reference	Part No.	Description
		CONDENSERS
C1A, C1B	B19-201	Variable condenser
C2, C14	A16-192	.01 MFD 400 volt condenser
C3	A20-145	Trimmer condenser
C4	A16-189	.05 MFD 400 volt condenser
C5	A15-196	100 MMFD ceramic condenser
C7	A15-204	50 MMFD ceramic condenser
C8	A15-205	12 MMFD ceramic condenser, temp. comp.
C9	A16-187	.1 MFD 400 volt condenser
C10	A15-176	250 MMFD mica condenser
C11	A16-190	.005 MFD 600 volt condenser
C12	A16-195	.001 MFD ceramic condenser
C13	A16-193	.05 MFD 600 volt condenser
C15, C16, C17	A18-289	20 MFD 25 volt electrolytic condenser; 20 MFD 350 volt electrolytic condenser; 30 MFD 350 volt electrolytic condenser
C19, C20	A16-184	.5 MFD 100 volt condenser
C21	A16-185	.005 MFD 1600 volt oil filled condenser
		RESISTORS
R1, R3	A60-659	22K ohm ½ watt 20% resistor
R2	A60-685	47K ohm ½ watt 20% resistor
R4	A60-769	7.5K ohm 2 watt 10% resistor
R5	A60-726	2.2 megohm ½ watt 20% resistor
R6	A24-182	Volume control, 500,000 ohm, with switch
R7	A60-728	10 megohm ½ watt 20% resistor
R8, R15	A60-758	560 ohm ½ watt 10% resistor
R9	A60-667	220K ohm ½ watt 20% resistor
R10	A60-731	470K ohm ½ watt 20% resistor
R11,	A60-771	270 ohm ½ watt 10% resistor
R12	A60-770	470 ohm ½ watt 10% resistor
R13, R14	A60-752	100 ohm ½ watt 10% resistor
		COILS AND TRANSFORMERS
L1	A10-527	Antenna Loading Coil
L2	B10-511	Antenna Coil
L4	A10-512	Oscillator Coil
L5	A33-229	Choke, "A" Line
L6	A33-228	Choke, vibrator hash
T1	A10-508	1st I.F. Transformer
T2	A10-509	2nd I.F. Transformer
T3	B80-242	Output Transformer (Part of Speaker, not furnished separately)
T4	B80-243	Power transformer
		DIAL PARTS
	A11-303	Bracket, Dial Scale
	B11-328	Bracket, String Guide
	A72-36	Bushing, Tuning Shaft Bearing
	A70-130	Clip, Spring, for Tuning Shaft
	A58-55	Dial Pointer
	B67-545	Dial Scale
	A28-101	Gasket for Speaker
	A52-316	Knob
	A11-329	Link, String Guide
	A89-10	Pilot Light, No. 47 Bayonet
	A65-37	Rivet, Shoulder, for Dial Pointer Stringing
	A65-42	Rivet, Shoulder, for String Guide Brkt. and Link
	A65-12	Rivet, Shoulder, for Dial Drive Stringing
	A75-83	Shaft, tuning
	A75-74	Shaft, for Dial Pointer
	A70-132	Spring, for Pilot Light Socket
	A70-135	Spring, Dial Drive String Tension
	A70-142	Spring, Pointer Drive String Tension
	A51-105	String, Pointer Travel, 17"
	A51-108	String, Condenser Drive, 19"
		MISCELLANEOUS
	S84-233	"A" lead assembly
	A83-421	Clip, I.F. Transformer Mounting
	A83-517	Clip, Oscillator Coil Mounting
	A43-10	Fuse, 15 Amp.
	A47-112	Grommet, rubber, (Spkr. & Gang mounting)
	B31-134	Mounting strap, rear
	B31-138	Mounting Plate, Front
	S84-192	Mounting parts kit
	A87-38	Receptacle, Antenna Cable
	B79-379	Speaker, 4" P.M. (includes Output Transformer)
	S84-322	Suppression Kit Assembly
	A34-105	Vibrator
	A83-519	Wiper, grounding, for case covers

Note: Tubular condensers must be high temperature (85°C) wax type.

©John F. Rider

Compliments of www.nucow.com

MODELS 41, 41A, 9082, Ch. 135.245

SCHEMATIC LOCATION	PART NUMBER	DESCRIPTION
	F-7621	Arm, Assembly (including pickup arm, pivot spring and arm lift bearing pin assembly)
	F-7622	Cartridge—Crystal (Less Needle)—Shure Bros. P92B
	F-298	Cabinet (including Lid, Hinges and Lid Support)
		Lid—Cabinet (For F-298 Cabinet)
	F-7679	Capacitor—Variable Assembly)
C19, C20	F-5051	Capacitor—Electrolytic—40 MFD. 150 V. 40 MFD. 150 V.
C5, C11	F-6015	Capacitor—Ceramic 100 MMFD. 500 V. 20%
C12	F-7549	Capacitor—Ceramic 100 MMFD. 500 V. 10%
C15	F-6488	Capacitor—Ceramic 250 MMFD. 500 V. 20%
C13	F-4894	Capacitor—Paper .005 MFD. 600 V.
C16	F-1344	Capacitor—Paper .01 MFD. 400 V.
C18	F-1376	Capacitor—Paper .02 MFD. 400 V.
C6, C7, C14	F-1345	Capacitor—Paper .05 MFD. 200 V.
C21	F-1346	Capacitor—Paper .05 MFD. 400 V.
C10	F-4957	Capacitor—Paper .09 MFD. 200 V.
C17	F-1623	Capacitor—Paper .1 MFD. 400 V.
	F-6149	Coil—Antenna
	F-7139	Coil—Oscillator
R5	F-5757	Control—On-Off & Volume
R12	F-6157	Control—Tone
	F-1090	Cord—Line
	F-6738	Knob—Plastic—Volume Control
	F-6740	Knob—Plastic—Tone Control
	F-6742	Knob—Plastic—Radio-Phono
	F-6744	Knob—Station Tuning
	F-7683	Leaflet—Instruction
	F-7623	Motor—Phono—60 Cycle (Less Turntable)
	F-7707	Needle—Phono
	F-7673	Panel Assembly—Cabinet Front
R14	F-4022	Resistor—33 Ohm—½ W.—20%
R10	F-4067	Resistor—180 Ohm—½ W.—10%
R1	F-4025	Resistor—22,000 Ohm—½ W.—20%
R4	F-4063	Resistor—47,000 Ohm—½ W.—20%
R9	F-4064	Resistor—33,000 Ohm—½ W.—20%
R2, R8	F-4026	Resistor—220,000 Ohm—½ W.—20%
R11	F-4027	Resistor—470,000 Ohm—½ W.—20%
R3, R6	F-1262	Resistor—1 Megohm—½ W.—20%
R7	F-4028	Resistor—6.8 Megohm—½ W.—20%
R13	F-5358	Resistor—1,000 Ohm—1 W.—10%
	F-4978	Shield—I.F. Transformer
	F-7515	Socket—Tube—8 Prong—Octal
	F-6148	Speaker—5" P.M. Dynamic
	F-6156	Switch—Radio-Phono
T1	F-7676	Transformer—I.F. #1
T2	F-7677	Transformer—I.F. #2
T3	F-4875	Transformer—Output

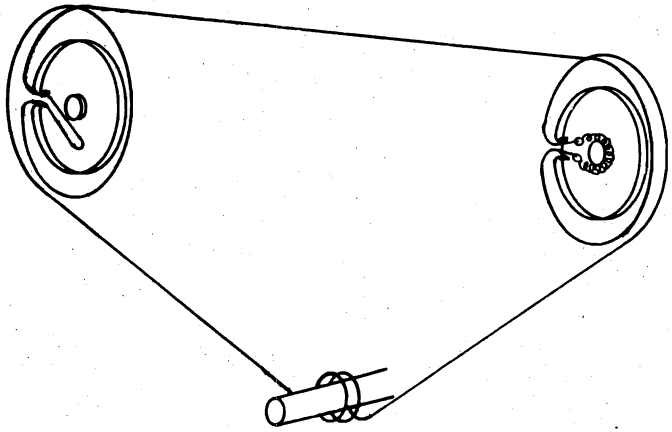

DIAL DRIVE STRINGING DIAGRAM

RADIO SPECIFICATIONS

Power Supply:
All models available . . . . . **117 Volts AC 60 Cycles**

Frequency Range:
Broadcast . . . . . **535-1620 KC**

Power Output:
Undistorted . . . . . **1.0 Watt**
Maximum . . . . . **1.8 Watts**

DISASSEMBLY INSTRUCTIONS

The following steps must be taken in removing the chassis from the cabinet:

1. Remove wood enclosure panel in record changer compartment.
2. Remove two speednuts located in rear of front panel. These speednuts retain the pins used to fasten the top of Dial Crystal to front panel.
3. Remove two pins and lift out crystal.
4. Remove dial pointer, knobs, motor & pickup plugs and antenna connections.
5. Remove five screws used to mount chassis board to underside of cabinet.
6. Remove chassis and mounting board.

NOTE: In some receivers the following components—R8, R11, C15 and C16 are replaced by the assembly listed below:

F-6477 Audio Coupling Plate

©John F. Rider

Compliments of www.nucow.com

MODELS 41, 41A,
9082, Ch. 135.245

POSITION OF TUNER	GENERATOR FREQUENCY	DUMMY ANTENNA	GENERATOR CONNECTION	TRIMMER ADJUSTMENTS (IN ORDER) SHOWN	TRIMMER FUNCTION
Closed	455 KC	.1 mfd.	12SA7GT Transl.Grid	T2, C9, & C8	I.F.
Open	1620 KC	.0002 mfd.	Loop	C4	Oscillator
1400 KC	1400 KC	.0002 mfd.	Loop	C2	Transl.

IMPORTANT ALIGNMENT NOTES

The alignment must be done in the order given.

The entire Alignment Procedure should be repeated step by step in the original order for greatest accuracy.

Always keep the output power from the generator at its lowest possible value to prevent the AVC of the receiver from interfering with accurate alignment.

ALIGNMENT PROCEDURE

PRELIMINARY:

Output Meter Connection. . . . . Across loud speaker voice coil
Generator ground lead connection. . . . . Floating Ground
Dummy Antenna Value to be in series with generator output. . . . . See chart below
Connection of Generator Output lead . . . . . See chart below
Generator Modulation . . . . . 30%, 400 Cycles
Position of Volume Control . . . . . Fully on

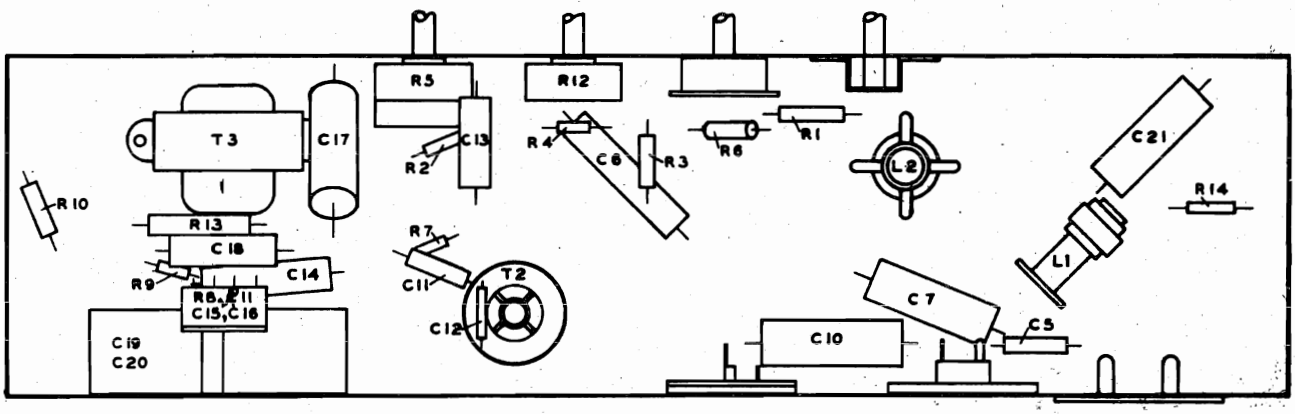

LOCATION OF PARTS UNDER CHASSIS

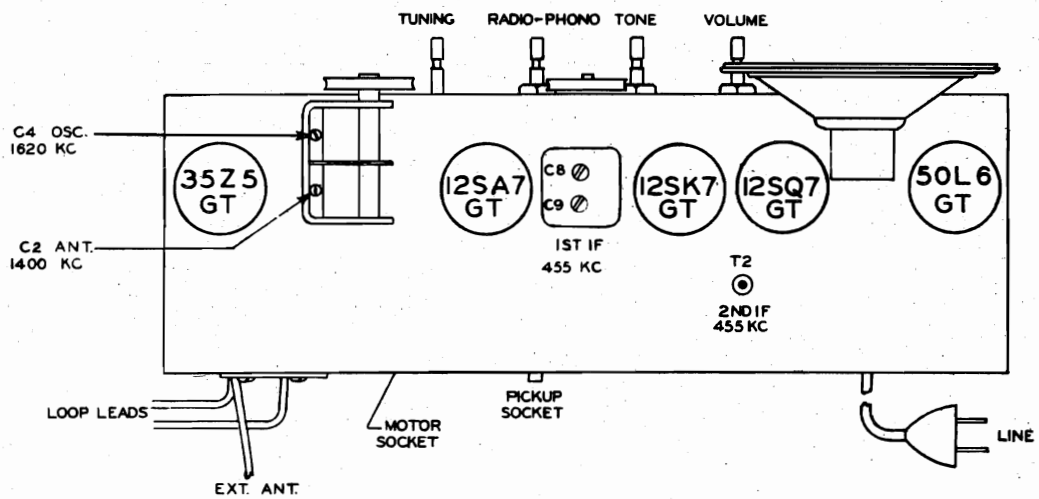

LOCATION OF PARTS ON TOP OF CHASSIS

©John F. Rider

Compliments of www.nucow.com

MODELS 41, 41A,
9082, Ch. 135.245

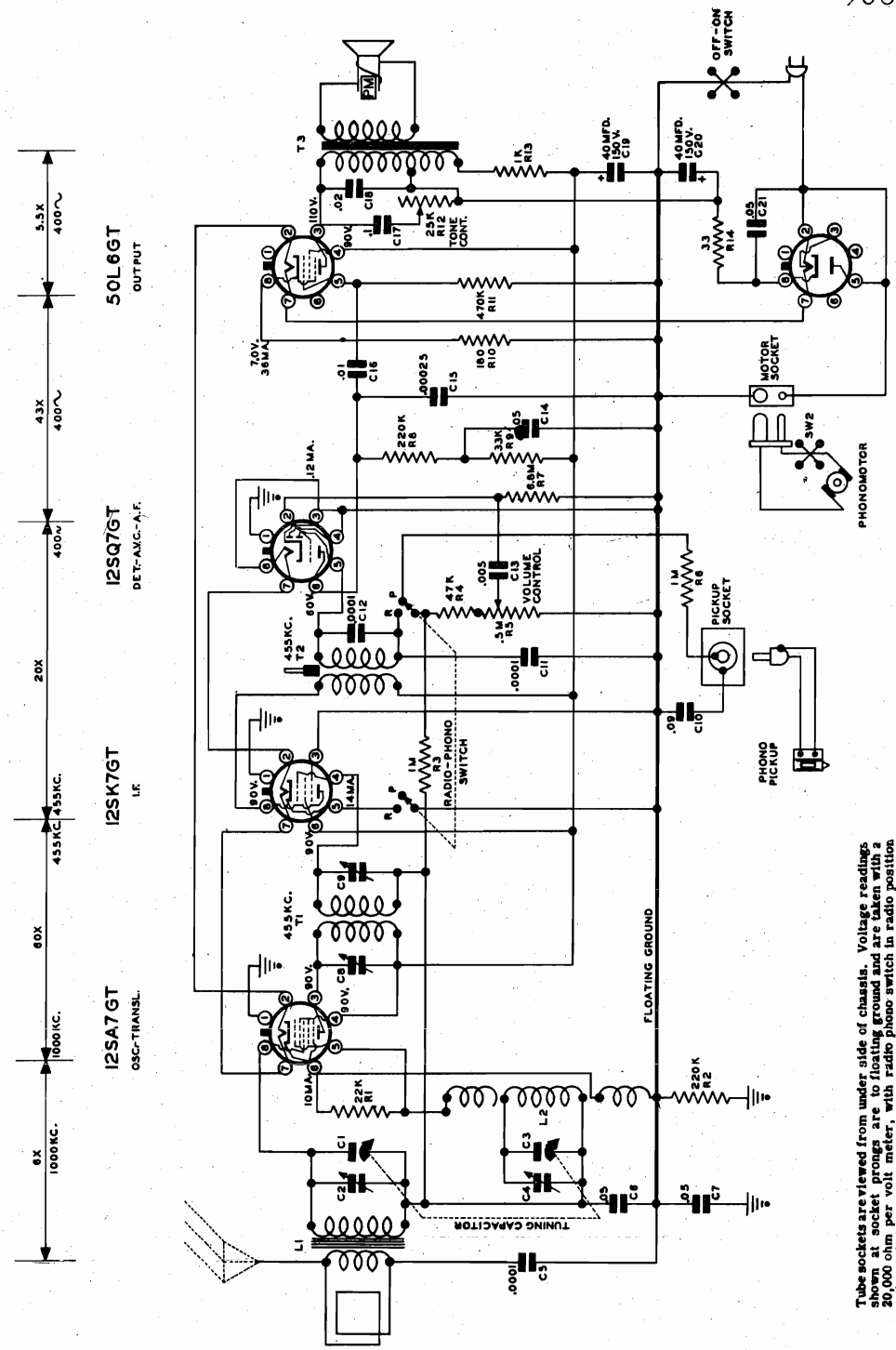

Tube sockets are viewed from under side of chassis. Voltage readings shown at socket prongs are to floating ground and are taken with a 20,000 ohm per volt meter with radio phono switch in radio position and with line voltage at 117 volts. Where no reading is given the voltage is zero or too low to read. Symbols are in accordance with A.S.A. standards Z32.5 and Z32.10 unless otherwise stated. K=1,000 ohms. M=1,000,000 ohms.

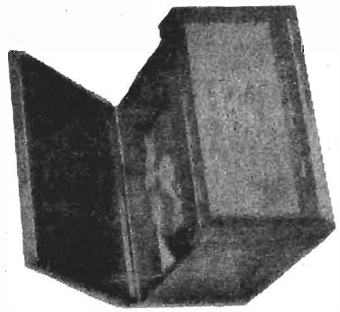

©John F. Rider

Compliments of www.nucow.com

MODEL 9083,
Ch. 100.154

ALIGNMENT PROCEDURE

PRELIMINARY:

Output meter reading to indicate 0.05 Watt across voice coil. . . . . 0.4 Volt

Generator ground lead connection. . . . . Receiver chassis

Generator modulation. . . . . .30%, 400 cycles

Position of volume control. . . . . Fully on

Position of tone control. . . . . Radio-Speech

Position of pointer with tuner fully closed . . . . . Horizontal position at low end of dial, parallel to bottom edge of dial scale. Repositioning of pointer may be accomplished by holding tuning control shaft steady and turning pointer to correct position.

POSITION OF TUNER	GENERATOR FREQUENCY	DUMMY ANTENNA	GENERATOR CONNECTION	TRIMMER ADJUSTMENTS (IN ORDER SHOWN)	TRIMMER FUNCTION	SENSITIVITY (FOR .05 WATT OUTPUT)
Closed	455 Kc.	0.1 mfd.	Trimmer #6	1, 2, 3 & 4	I.F.	46 mv
1400 Kc.	1400 Kc.	200 mmfd.	Ext. Ant. Clip	5	Osc.	
1400 Kc.	1400 Kc.	200 mmfd.	Ext. Ant. Clip	6	Ant.	100 mv/m

IMPORTANT ALIGNMENT NOTES:

The alignment must be done in the order given.

The entire alignment procedure should be repeated step by step in the original order for greatest accuracy.

Always keep the output power from the generator at its lowest possible value to prevent the AVC of the receiver from interfering with accurate alignment.

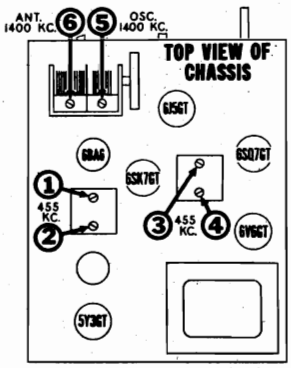

AUDIO OSCILLATION

The audio system of this receiver utilizes a two stage type of inverse feed-back arrangement and should it ever be necessary to replace the speaker or output transformer it is important to maintain a definite phase relationship in the feed-back circuit. If the connections to the output transformer are reversed or if the feed-back connection is made to the wrong side of the output transformer secondary, the system will become regenerative instead of degenerative. Under those conditions audio oscillation may result. If that occurs, oscillation may be prevented by reversing the connections to the speaker.

©John F. Rider

Compliments of www.nucow.com

MODEL 9083,
Ch. 100.154

SCHEMATIC DIAGRAM

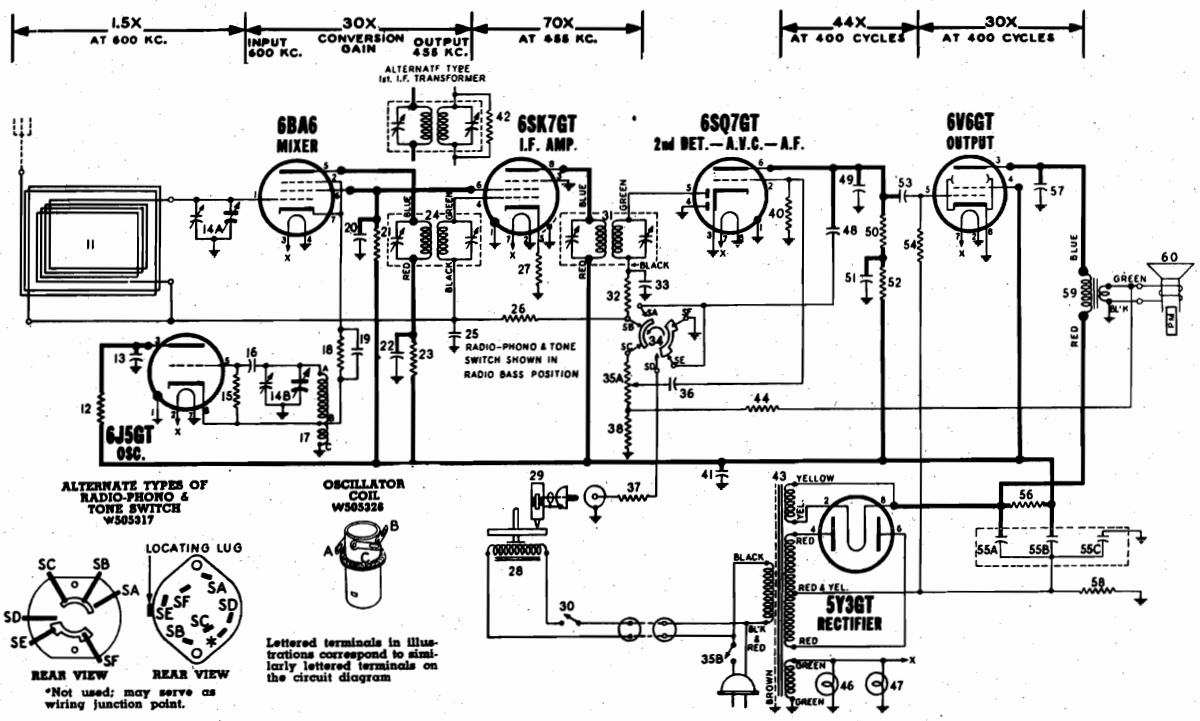

DIAL POINTER DRIVE CORD ARRANGEMENT (Side View)

To string dial cord, set gang condenser to fully open position and use the following parts:

W 114955 Clip on end of cord
W 117057 Cord (3 feet)
W 119087 Ring for dial cord
W 505161 Tension spring

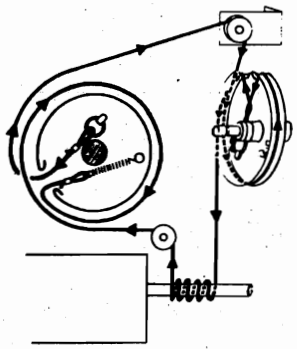

To replace and properly position pointer see step 1 in "Alignment Procedure"

SOCKET VOLTAGES

Measured with voltmeter having sensitivity of 1000 Ohms per volt except where indicated by (*). The (*) symbol designated a vacuum tube voltmeter measurement.

DIAL TUNED TO 540 KC.
VOLUME ON FULL WITH NO SIGNAL
RADIO-PHONO & TONE SWITCH IN
"RADIO-BASS" POSITION

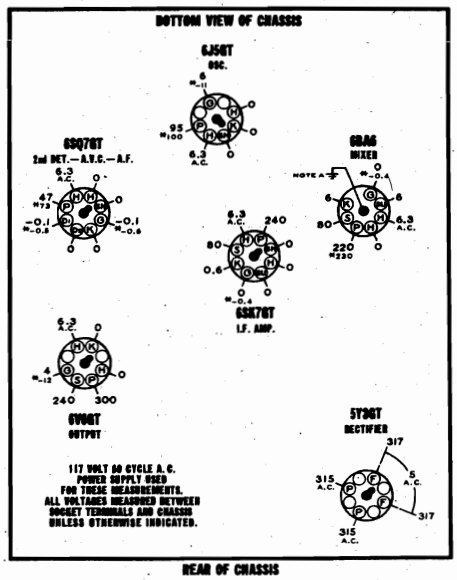

NOTE A: Grounding of center stud on tube socket is necessary to reduce capacity coupling between other pins. Oscillation may result if this ground is omitted.

©John F. Rider

Compliments of www.nucow.com

SPECIFICATIONS

Power Supply
All models available . . . 117 volts AC, 60 cycle Radio 60 watts
Phono 30 watts

Frequency Range
Broadcast . . . 540-1600 Kc.

Power Output
Undistorted . . 3.0 watts
Maximum . . . . 5.0 watts

REPAIR PARTS LIST

SCHEMATIC LOCATION	PART NUMBER	DESCRIPTION
		CONDENSERS
13.....	W502151	Condenser—.01 Mfd. 400 volt.....
14-A,B...	W505315	Condenser—variable gang (with drum)..
16.....	W502931	Condenser—ceramic 100 Mmfd. 500 volt.
19.....	W502153	Condenser—.05 Mfd. 200 volt.....
20.....	W502157	Condenser—.05 Mfd. 400 volt.....
22.....	W502152	Condenser—.02 Mfd. 400 volt.....
25.....	W502153	Condenser—.05 Mfd. 200 volt.....
33.....	W502931	Condenser—ceramic 100 Mmfd. 500 volt.
36.....	W502156	Condenser—.004 Mfd. 400 volt.....
41.....	W502157	Condenser—.05 Mfd. 400 volt.....
48.....	W512006	Condenser—.005 Mfd. 600 volt.....
49.....	W502271	Condenser—mica 260 Mmfd. 500 volt....
51.....	W502410	Condenser—.1 Mfd. 400 volt.....
53.....	W502152	Condenser—.02 Mfd. 400 volt.....
55-A,B,C.	W502207	Condenser—electrolytic A—20 Mfd. 400 volt B—10 Mfd. 400 volt ..... C—20 Mfd. 25 volt.
57.....	W502156	Condenser—.004 Mfd. 400 volt.....
		RESISTORS
12.....	W502466	Resistor—carbon 33,000 Ohms ± 10% 1w.
15.....	W502131	Resistor—carbon 47,000 Ohms 1/4 watt.
18.....	W502128	Resistor—carbon 2200 Ohms 1/4 watt...
21.....	W502288	Resistor—carbon 47,000 Ohms 1 watt ..
23.....	W502459	Resistor—carbon 6800 Ohms 1/4 watt...
26.....	W502269	Resistor—carbon 3.3 Meg. 1/4 watt....
27.....	W502264	Resistor—carbon 47 Ohms ± 10% 1/4 w..
32.....	W502131	Resistor—carbon 47,000 Ohms 1/4 watt.
35-A,B...	W505318	Volume control 1 Meg. (with switch)...
37.....	W510185	Resistor—carbon 470,000 Ohms 1/2 watt
38.....	W510122	Resistor—carbon 150 Ohms 1/2 watt....
40.....	W502468	Resistor—carbon 4.7 Meg. 1/4 watt....
42.....	W510191	Resistor—carbon 1 Meg. 1/2 watt.....
44.....	W510146	Resistor—carbon 150 Ohms 1/2 watt....
50.....	W502133	Resistor—carbon 220,000 Ohms 1/4 watt
52.....	W502133	Resistor—carbon 220,000 Ohms 1/4 watt
54.....	W502134	Resistor—carbon 470,000 Ohms 1/4 watt
56.....	W504771	Resistor—carbon 3300 Ohms 2 watt.....
58.....	W502293	Resistor—wire wound 200 Ohms ± 10% 2 w

SCHEMATIC LOCATION	PART NUMBER	DESCRIPTION
		COILS AND TRANSFORMERS
11.....	W508361	Loop antenna.....
17.....	W505326	Coil—oscillator.....
24.....	W502657	Transformer—1st I.F.....
31.....	W502658	Transformer—2nd I.F.....
43.....	W502174	Transformer—power.....
59.....	W505305	Transformer—output.....
		OTHER ELECTRICAL PARTS
28.....	W508120	Motor—for record changer; 115 volt 60 cycle.....
29.....	W508432	Crystal Cartridge.....
30.....	W505269	Switch—"ON-OFF" for record changer...
34.....	W505317	Switch—radio-phono.....
46, 47...	W110629	Lamp—dial (Mazda #44) 6.3 volt 0.25 Amp.....
60.....	W506657	Speaker—P.M. Dynamic (6 inch).....
		MISCELLANEOUS PARTS
	W116467	Base for mtg. electrolytic condenser..
	W505165	"C" Washer—for tuning shaft.....
	KX508371	Cabinet.....
	W112745	Clip—coil mounting.....
	W114955	Clip—retainer on end of dial cord....
	W160326	Clip—retains dial scale.....
	W117057	Cord—dial drive (3 ft. required) .....per foot
	W508363	Dial scale (foil).....
	W508350	Escutcheon and dial window assy.....
	W505464	Hinge for lid.....per pair
	W505344	Knob—tuning (clear plastic).....
	W505345	Knob—"Volume" (clear plastic).....
	W505346	Knob—"Radio-Phono" (clear plastic)...
	W508372	Lid (less hardware).....
	W505463	Lid support.....
	W508433	Needle—phonograph; for standard records.....
	W508434	Needle—phonograph; for "Fine Groove" and "Microgroove" records.....
	W500966	Plug for phono. pick-up cable.....
	W501031	Plug for phono. motor cable.....
	W505686	Pointer.....
	W508266	Record changer.....
	W119087	Ring for dial cord.....
	W505944	Rubber pad for mtg. chassis.....
	W79993	Screw—#8 x 1 1/4"; for mtg. chassis..
	W162054	Shaft and drum for pointer.....
	W505313	Shaft—tuning.....
	W117716	Shield—tube.....
	W505459	Socket—dial lamp.....
	W504397	Socket—miniature.....
	W116690	Socket—octal base.....
	W160392	Socket—octal (rectifier).....
	W160039	Socket—phono. plug.....
	W505307	Socket and phono. motor cable.....
	W505161	Spring—tension.....
	W111456	Washer—spring washer for tuning shaft

©John F. Rider
Compliments of www.nucow.com

MODEL 9280,
Ch. 528.168

SPECIFICATIONS

Power Supply: .....

Power Output:
Undistorted .....0.15 Watt
Maximum .....0.30 Watt

117 Volts, DC or 50-60 Cycles AC, 11 Watts or Catalog No. 6404 Battery Pack.

Frequency Range:
Broadcast .....540-1610 KC

Schematic Location	Part Number	DESCRIPTION
		CHASSIS PARTS
	T84-391	Cable, assembly, battery
	T83-421	Clip, I.F. transformer mounting
C1, C2, C3	T18-296	Capacitor, electrolytic
C4, C5, C6	T19-207	Capacitor, variable (3 gang)
C7	T20-149	Capacitor, trimmer
C8, C10		
C11	T16-153	Capacitor, .005 mfd. 600 v.
C9	T15-188	Capacitor, 100 mmfd. mica
C12, C17	T16-152	Capacitor, .05 mfd. 200 v.
C13	T15-186	Capacitor, 10 mmfd. mica
C14	T16-150	Capacitor, .02 mfd. 400 v.
C15, C16	T16-157	Capacitor, .1 mfd. 200 v.
C18, C19	T16-179	Capacitor, .05 mfd. 400 v.
C20, C21, C22	T17-100	Couplate, ceramic unit
L3	T10-553	Coil, oscillator
R11, S1	T24-185	Control, volume
	T84-77	Cord, power, AC/DC
	T51-105	Cord, pointer travel, 28"
	T21-152	Cover, plate, bottom
	T47-108	Grommet, variable condenser
	T76-13	Insulator, electrolytic
	T52-196	Knob, AC/DC/battery switch
L1	T82-65	Loop, antenna
	T45-121	Plug, AC/DC
	T58-77	Pointer
	T39-265	Pulley, dial cord
	T83-642	Rectifier, selenium

Schematic Location	Part Number	DESCRIPTION
S2	T69-173	Switch, AC/DC/battery
T1, T2	T10-475	Transformer, 1st and 2nd I.F.
T3	T80-228	Transformer, output
L2	T10-535	Transformer, RF
	T86-51	Washer, "C", tuning shaft
	T86-80	Washer, compression, tuning shaft
		CABINET PARTS
	T44-10	Baffle
	T22-159	Button, plug (trimmer hole)
	T42-463	Cabinet
	T67-549	Dial scale
	T40-152	Escutcheon
	T52-203	Grille cloth
	T31-157	Knob
	T76-17	Plate, loop cover
	T97-70	Terminal strip, loop
	T97-132	Screw, #6-3/8, statuary bronze
	T98-12	Screw, #6-1/4, statuary bronze

Schematic Location	Part Number	DESCRIPTION
R1	T60-744	Resistor, 22,000 ohms, 1/2 w. 10%
R2	T60-669	Resistor, 4.7 meg. 1/2 w.
R3, R5	T60-728	Resistor, 10 meg. 1/2 w.
R4	T60-730	Resistor, 47,000 ohms, 1/2 w.
R6	T60-704	Resistor, 330 ohms, 1/2 w. 10%
R7	T60-727	Resistor, 100,000 ohms, 1/2 w.
R8	T60-676	Resistor, 30,000 ohms, 1/2 w.
R9	T60-770	Resistor, 470 ohms, 1/2 w. 10%
R10	T60-726	Resistor, 2.2 meg. 1/2 w.
R12, R15	T60-729	Resistor, 1500 ohms, 1/2 w. 10%
R13	T60-708	Resistor, 680 ohms, 1/2 w. 10%
R14	T60-796	Resistor, 110 ohms, 3 w. 10%
R16	T60-757	Resistor, 2000 ohms, 10 w. 5%
R17, R18, R19	T17-100	Couplate, ceramic unit
	T75-79	Shaft, tuning
	T68-39	Socket, miniature, wafer
	T79-378	Speaker, 5" P.M.
	T70-122	Spring, dial cord

ALIGNMENT PROCEDURE

Output meter reading to indicate 0.05 watt across voice coil ..... 0.4 v.

Generator ground lead connected.....To B- through 0.1 mfd. capacitor

Generator modulation .....30%, 400 cycles

Position of volume control.....Fully on

Position of pointer with tuner fully closed.....Center of pointer lined up with extreme left dot on dial backing plate. (Chassis right side up.)

©John F. Rider

Compliments of www.nucow.com

MODEL 9280,
Ch. 528.168

Position of Tuner	Generator Freq.	Dummy Antenna	Generator Connection	Adjustments (in order shown)	Function	Max. Microvolts Input to produce .05 w. output
Min. Cap.	455 kc	0.1 mfd.	Pin #6 of 1U4 I-F Amp.	T2 (top and bottom)	I.F.	5000
Min. Cap.	455 kc	0.1 mfd.	Pin #6 of 1R5 Conv.	T1 (top and bottom)	I.F.	250
Min. Cap.	1610 kc	0.1 mfd.	Stator ant. tuner	C6	Osc.	
1400 kc	1400 kc	0.1 mfd.	Stator ant. tuner	C5	R.F.	30
1400 kc	1400 kc		Hazeltine Test Loop	C7	Loop	100

ALIGNMENT NOTES:

1. It is recommended that this set be connected to an isolation transformer when aligning on AC.
2. The alignment must be done in the order given above.
3. While making the above adjustments, keep the volume control set for maximum output and the signal generator output attenuated to avoid AVC action.

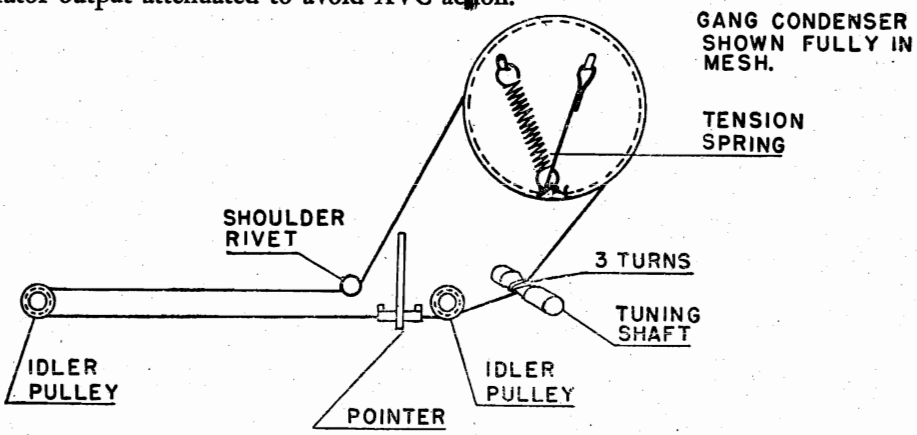

STRING AND POINTER HOOKUP

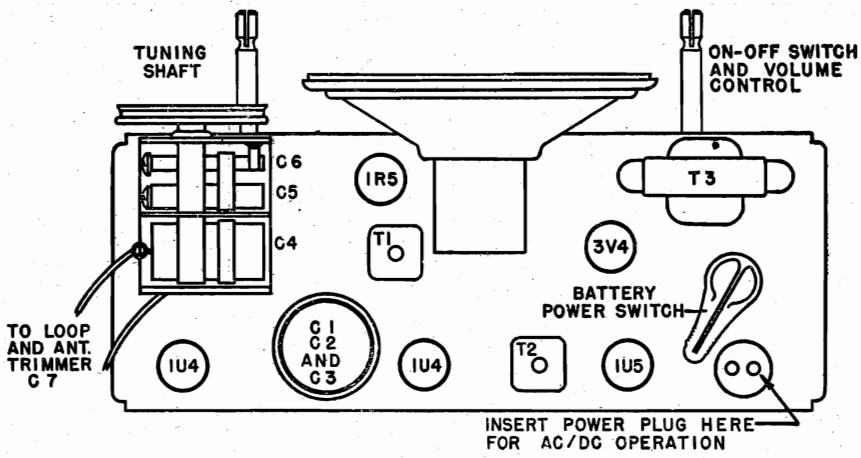

LOCATION OF PARTS ON TOP OF CHASSIS

©John F. Rider

Compliments of www.nucow.com

MODEL 9280,
Ch. 528.168

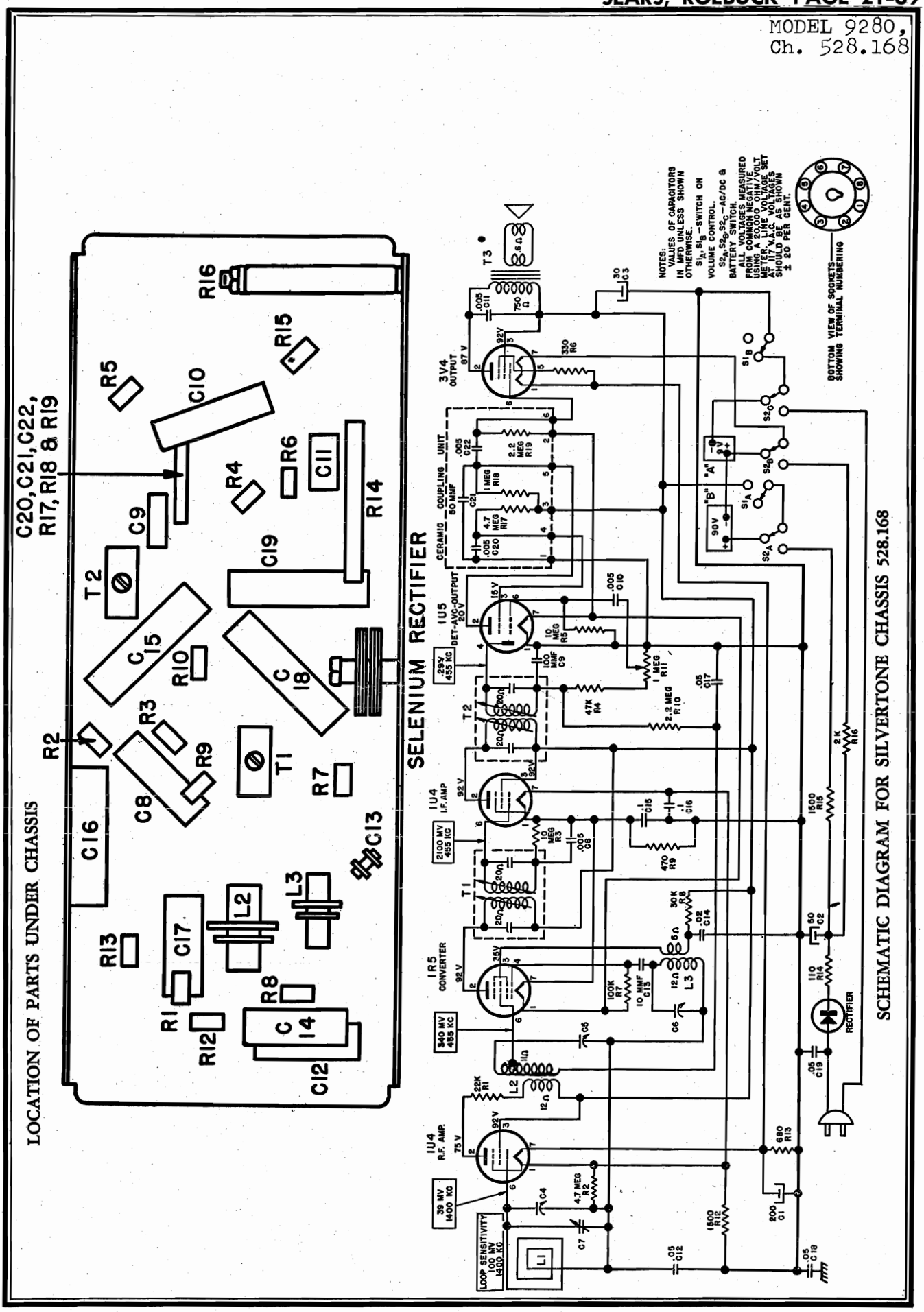

©John F. Rider

Compliments of www.nucow.com

MODEL 215,
Ch. 528.174

SPECIFICATIONS

Power Supply: .....

Power Output:
Undistorted .....0.15 Watt
Maximum .....0.30 Watt

117 Volts, DC or 50-60 Cycles AC, 11 Watts or Catalog No. 6480 "B" Battery and two Flashlight Cells

Frequency Range:
Broadcast .....540-1625 KC

Schematic Location	Part Number	DESCRIPTION
		CHASSIS PARTS
C1, C2	T19-209	Capacitor, variable (2 gang)
C3, C4, C5	T18-297	Capacitor, electrolytic
C6	T15-205	Capacitor, 50 mmfd. ceramic
C7, C14	T16-153	Capacitor, .005 mfd. 600 v.
C8, C16, C17	T16-150	Capacitor, .02 mfd. 400 v.
C9, C10, C11, C12, C13	T17-103	Capacitor, ceramic unit
C15	T16-152	Capacitor, .05 mfd. 200 v.
C18	T16-179	Capacitor, .05 mfd. 400 v.
	T11-187	Clamp, power cord
	T83-421	Clip, I.F. transformer mounting
L2	T10-554	Coil, oscillator

Schematic Location	Part Number	DESCRIPTION
R11, R12	T60-668	Resistor, 1 megohm, ½ w.
R13	T60-708	Resistor, 680 ohm, ½ w. 10%
R14	T60-709	Resistor, 820 ohm, ½ w. 10%
R15	T60-770	Resistor, 470 ohm, ½ w. 10%
R16	T60-729	Resistor, 1500 ohm, ½ w. 10%
R17	T60-725	Resistor, 160 ohm, 3 w. 5%
R18	T60-757	Resistor, 2000 ohm, 10 w. 5%
R19	T60-711	Resistor, 2700 ohm, ½ w. 10%
R20	T60-771	Resistor, 270 ohm, ½ w. 10%
	T71-43	Shield, volume control
	T68-39	Socket, miniature wafer
	T77-151	Spacer, variable condenser
	T79-382	Speaker, 3½" P.M.
	T70-165	Spring

Schematic Location	Part Number	DESCRIPTION
	T76-69	Connector, "B" battery
R4, S1	T24-187	Control, volume and switch
	T23-162	Cord, power, AC/DC
	T21-159	Cover, bottom
	T47-108	Grommet, variable condenser
	T37-126	Insulator, volume control
	T37-127	Insulator, selenium rectifier
L1	T82-68	Loop, antenna
	T83-642	Rectifier, selenium
R1	A60-727	Resistor, 100,000 ohm, ½ w.
R2, R5	A60-728	Resistor, 10 megohm, ½ w.
R3	A60-730	Resistor, 47,000 ohm, ½ w.
R6	A60-669	Resistor, 4.7 megohm, ½ w.
R7, R8	A60-726	Resistor, 2.2 megohm, ½ w.
R9	A60-690	Resistor, 27 ohm, ½ w. 10%
R10	A60-753	Resistor, 220 ohm, ½ w. 10%

Schematic Location	Part Number	DESCRIPTION
T1, T2	T10-508	Transformer, 1st and 2nd I.F.
T3	T80-256	Transformer, output
		CABINET PARTS
	T42-468	Cabinet—front
		—back cover
	T22-155	Clip, back cover
	T35-8	Clip, "A" battery retainer
	T83-431	Handle
	T70-164	Hinge, spring clip
	T52-307	Knob
	T67-544	Overlay, dial scale
	T67-555	Overlay, volume

ALIGNMENT PROCEDURE

Output meter reading to indicate 0.05 watt across voice coil ..... 0.4 v.

Generator ground lead connected.....To B- through 0.1 mfd. capacitor

Generator modulation .....30%, 400 cycles

Position of volume control.....Fully on

Position of pointer with tuner fully closed.....Pointer should be horizontal, pointing to left (9 o'clock).

©John F. Rider

Compliments of www.nucow.com

MODEL 215,
Ch. 528.174

Position of Tuner	Generator Freq.	Dummy Antenna	Generator Connection	Adjustments (in order shown)	Function	Max. Microvolts Input to produce .05 w. output
Min. Cap.	455 kc	0.1 mfd.	Pin #6 of 1U4 I-F Amp.	T2 (top and bottom)	I.F.	5000
Min. Cap.	455 kc	0.1 mfd.	Pin #6 of 1R5 Conv.	T1 (top and bottom)	I.F.	250
Min. Cap.	1625 kc	0.1 mfd.	Stator ant. tuner	C2	Osc.	
1400 kc	1400 kc		Hazeltine Test Loop	C1	Loop	100

ALIGNMENT NOTES:

1. It is recommended that this set be connected to an isolation transformer when aligning on AC.
2. The alignment must be done in the order given above.
3. While making the above adjustments, keep the volume control set for maximum output and the signal generator output attenuated to avoid AVC action.

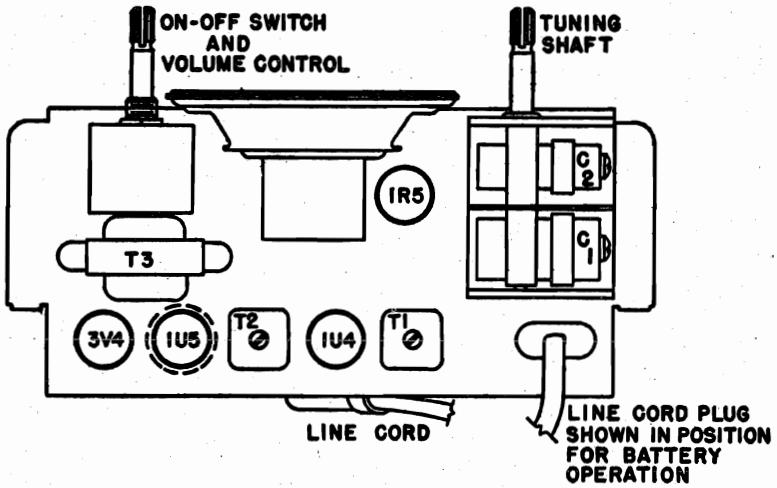

LOCATION OF PARTS ON TOP OF CHASSIS

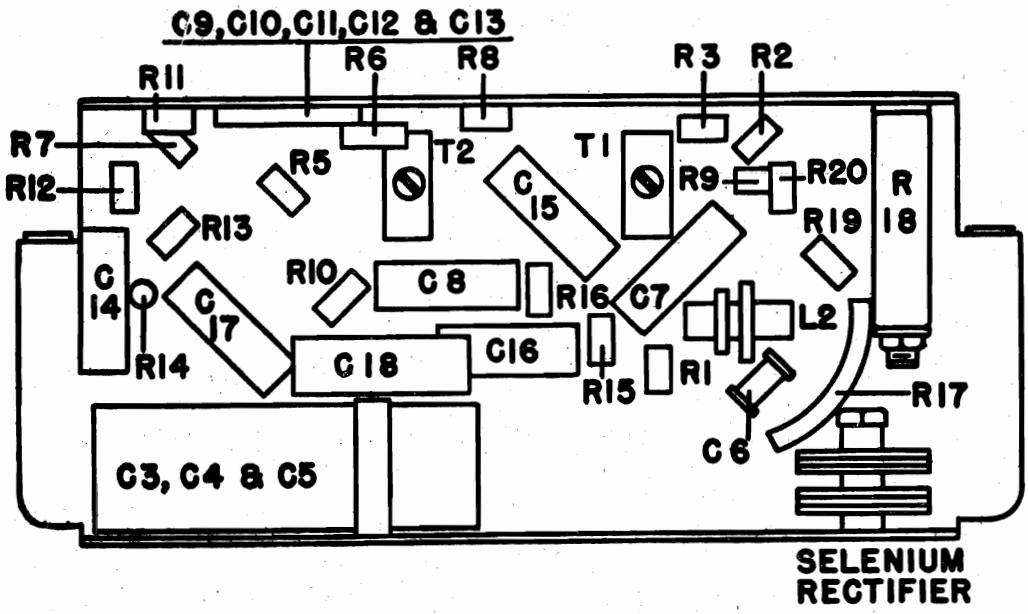

LOCATION OF PARTS UNDER CHASSIS

©John F. Rider

Compliments of www.nucow.com

MODEL 215,
Ch. 528.174

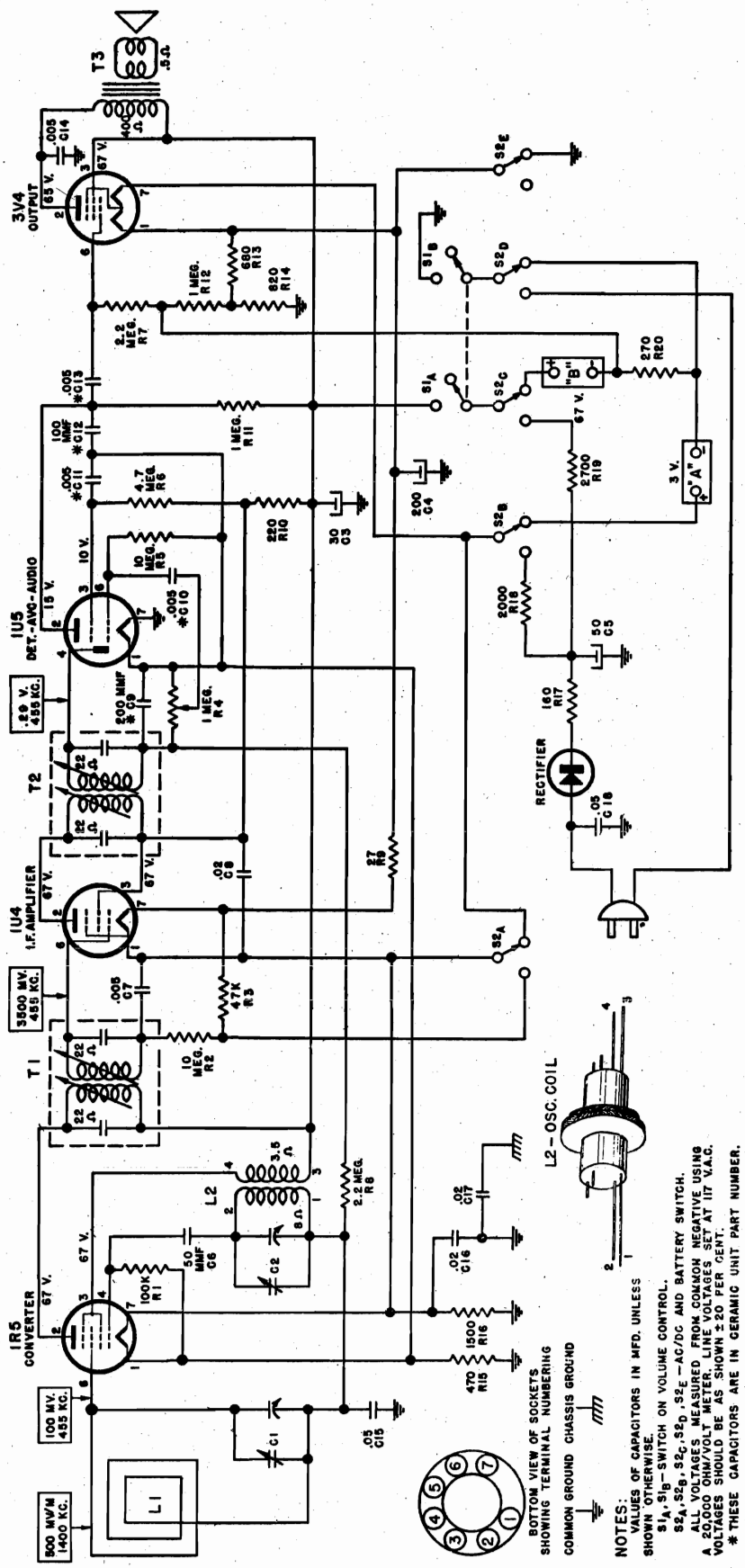

SCHEMATIC DIAGRAM FOR SILVERTONE CHASSIS 528.174

©John F. Rider

Compliments of www.nucow.com

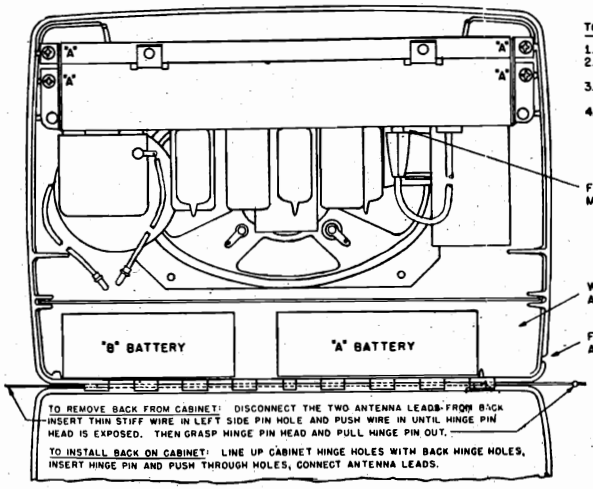

TO REMOVE CHASSIS FROM CABINET

1. DISCONNECT ANTENNA LEADS FROM CABINET BACK.
2. DISCONNECT BATTERY LEADS AND REMOVE BATTERIES AND CARDBOARD SEPARATOR.
3. LAY CABINET FACE DOWN AND REMOVE THE FOUR SCREWS MARKED "A".
4. TILT REAR OF CHASSIS UPWARD AND PULL BACK SLIGHTLY UNTIL CHASSIS CLEARS LOCATING PINS ON CABINET. THEN LOWER ENTIRE CHASSIS UNTIL KNOBS CLEAR TOP OF CABINET AND REMOVE.

FOR BATTERY OPERATION THE AC-DC LINE CORD PLUG MUST BE FIRMLY INSERTED IN THIS RECEPTACLE.

WIND EXCESS LINE CORD AND PLACE IN THIS SPACE ADJACENT TO BATTERY.

FOR AC-DC OPERATION PLACE LINE CORD IN NOTCH AND CLOSE BACK.

POWER SUPPLY

THIS RADIO CAN BE OPERATED ON EITHER:

110 to 120 VOLTS DIRECT CURRENT
OR
110 to 120 VOLTS, 50 to 60 CYCLE, ALTERNATING CURRENT
OR
BATTERIES—WITH ONE 4½ VOLT "A" and ONE 90 VOLT "B"

GROUND

When an external aerial is attached to the radio be sure that a good ground is connected to the outer clip marked "GND" located inside of the cabinet back.

WARNING:—Do not attach a ground direct to the radio chassis—any external ground connection to any metal part of the chassis will cause a short and possible damage.

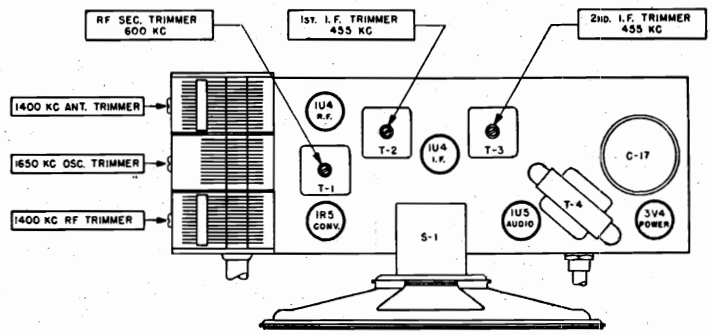

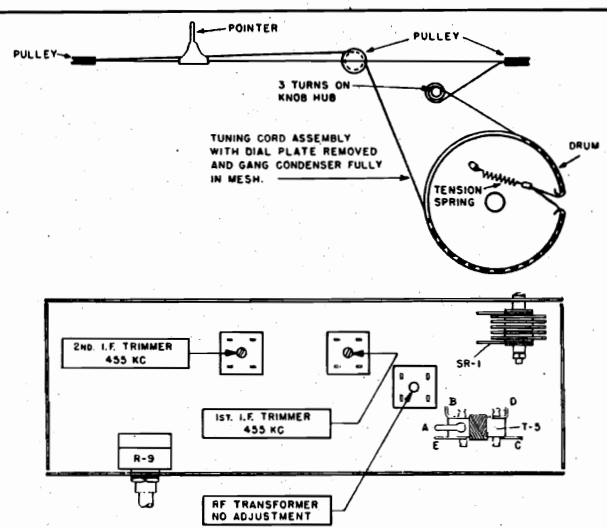

PART NO 1U-312 & 312-P

©John F. Rider
Compliments of www.nucow.com

ALIGNMENT PROCEDURE

Be sure to follow procedure carefully and in the order given—otherwise the receiver will be insensitive and the dial calibration incorrect. For alignment procedure, read tabulations from left to right. Make the adjustment marked (1) first, (2) next, (3) third.

IF RADIO HAS METAL PLATE ON BOTTOM OF CHASSIS BE SURE TO HAVE PLATE MOUNTED ON CHASSIS WHEN ALIGNING SET IN STEPS 2, 3 AND 4.

Before starting alignment:

(A) Check tuning dial adjustment by tuning gang condenser until plates touch maximum capacity stop (completely in mesh) at which point the dial indicator must be exactly even with the first mark at the low frequency end of the dial scale. If dial indicator does not point exactly to this mark, move pointer to correct position.

(B) Use an accurately calibrated test oscillator with some type of output measuring device.

(C) WHEN ADJUSTING THE 1650 KC OSCILLATOR TRIMMER, remove chassis from cabinet and disconnect the loop connection wires from the loop terminal strip. Attach a 1 megohm resistor across these connections and feed output of test oscillator across the 1 megohm resistor.

(D) THE 1400 KC LOOP ANTENNA TRIMMER should be adjusted only after all other adjustments have been made and with the set mounted in the cabinet. When aligning the 1400 KC Antenna Trimmer, couple test oscillator to receiver loop by: (1) make loop consisting of five to ten turns of No. 20 to No. 30 size wire, wound on a 2" or 3" form; (2) connect this loop across output of test oscillator; (3) place test oscillator loop near radio loop. Open cabinet back just enough to insert a screw driver to adjust the antenna trimmer. BE SURE THAT NEITHER LOOP MOVES WHILE ALIGNING.

Steps	Set receiver dial to:	TEST OSCILLATOR			Refer to parts layout diagram for location of trimmers mentioned below:
		Adjust test oscillator frequency to:	Use dummy antenna in series with output of test oscillator consisting of:	Attach output of test oscillator to	
1	Any point where no interfering signal is received	Exactly 455 K. C.	0.2 Mfd. Condenser	High side to grid of 1R5 tube. Low side to chassis (common negative in Model 1U312) through a .02 Mfd. blocking condenser.	Adjust each of the 2nd I.F. transformer trimmer adjustment screws for maximum output, then adjust each of the 1st I.F. transformer trimmer adjustment screws for maximum output.
2	Rotate gang condenser to minimum capacity	Exactly 1650 K. C.	See paragraph (C) above	See paragraph (C) above	Adjust 1650 K. C. oscillator trimmer for maximum output.
3	Approximately 1400 K. C.	Approx. 1400 K. C.	See paragraph (D) above	See paragraph (D) above	Adjust 1400 K. C. antenna trimmer for maximum output.
4	Approximately 600 K. C.	Approx. 600 K. C.	See paragraph (D) above	See paragraph (D) above	While rocking gang adjust 600 K. C. R.F. trimmer for maximum output.

©John F. Rider

Compliments of www.nucow.com

MODELS 1U-312-PG, 1U-312-PW, 312-PG, 312-PW

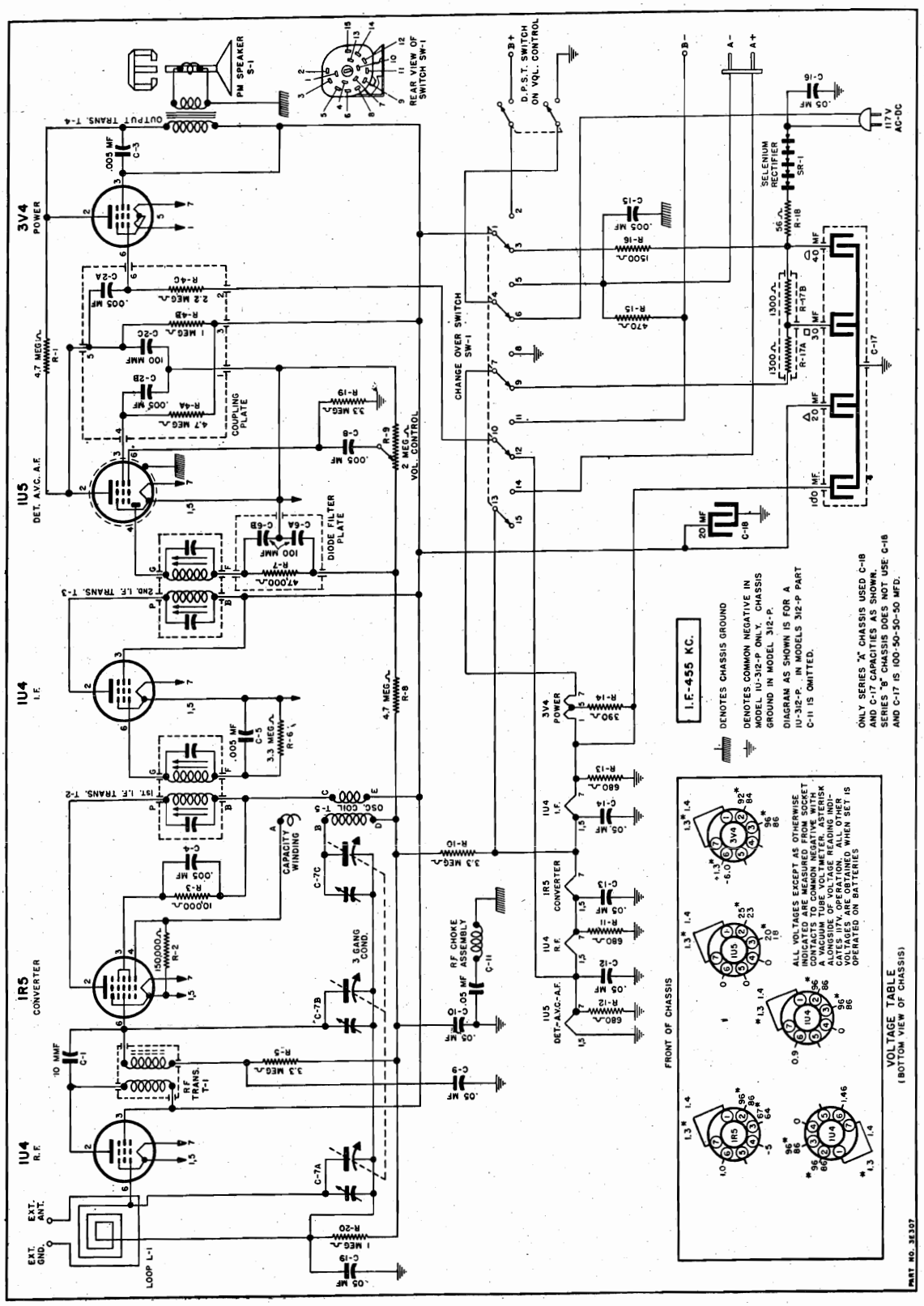

©John F. Rider

Compliments of www.nucow.com

PARTS LIST

Illus. No.	Part No.	Part Name and Description
C-1	23E2027-5	Capacitor, Fixed Ceramic, 10 MMF 350 V.
C-2A, C-2B, C-2C		Part of 23E2023-2 Ceramic Coupling Plate (See Misc. Parts)
C-3	23E2025	Capacitor, Fixed Ceramic, .005 MFD 350 V. (Disc)
C-4	23E2025	Capacitor, Fixed Ceramic, .005 MFD 350 V. (Disc)
C-5	23E2025	Capacitor, Fixed Ceramic, .005 MFD 350 V. (Disc)
C-6A, C-6B, C-7A		Part of 23E2022-2 Diode Filter Plate (See Misc. Parts)
C-7B, C-7C	24E54	Capacitor, 3 Gang, Tuning
C-8	23E2025	Capacitor, Fixed Ceramic, .005 MFD 350 V (Disc)
C-9	23E416	Capacitor, Tubular .05 MFD 400 V.
C-10	23E416	Capacitor, Tubular .05 MFD 400 V.
C-11	20E611	Capacitor, R. F. Choke & Capacitor Assembly (in Model 1U312P only)
C-12	23E416	Capacitor, Tubular, .05 MFD 400 V.
C-13	23E416	Capacitor, Tubular, .05 MFD 400 V.
C-14	23E416	Capacitor, Tubular, .05 MFD 400 V.
C-15	23E2025	Capacitor, Fixed Ceramic, .005 MFD 350 V. (Disc)
C-16	23E416	Capacitor, Tubular, .05 MFD 400 V.
C-17	25E48	Capacitor, Dry Electrolytic, 40-30-20 MFD 150 V., 100 MFD 25 V. (Used in "Series A" only)
C-17	25E53	Capacitor, Dry Electroyltic 50-50-50 MFD 150 V., 100 MFD 25 V. (Used, starting with "Series B")
C-17	25E56	Capacitor, Dry Electrolytic, 50-50-50 MFD 150 V., 100 MFD 25 V. (in Model 1U312P only)
C-18	25E55	Capacitor, Dry Electrolytic, 20 MFD 150 V. (used in Series "A" only)
C-19	23E416	Capacitor, Tubular .05 MFD 400 V.
R-1	27E475	Resistor, Carbon, 4.7 Megohm 1/3 W.
R-2	27E154	Resistor, Carbon, 150,000 Ohm 1/3 W.
R-3	27E103	Resistor, Carbon, 10,000 Ohm 1/3 W.
R-4A, R-4B, R-4C		Part of 23E2023-2 Ceramic Coupling Plate (See Misc. Parts)
R-5	27E335	Resistor, Carbon, 3.3 Megohm 1/3 W.
R-6	27E335	Resistor, Carbon, 3.3 Megohm 1/3 W.
R-7		Part of 23E2022-2 Diode Filter Plate (See Misc. Parts)
R-8	27E475	Resistor, Carbon, 4.7 Megohm 1/3 W.
R-9	28E63	Resistor, Volume Control, 2 Megohm
R-10	27E335	Resistor, Carbon, 3.3 Megohm 1/3 W.
R-11	27E681	Resistor, Carbon, 680 Ohm 1/3 W.
R-12	27E681	Resistor, Carbon, 680 Ohm 1/3 W.
R-13	27E681	Resistor, Carbon, 680 Ohm 1/3 W.
R-14	27E391	Resistor, Carbon, 390 Ohm 1/3 W.
R-15	27E471	Resistor, Carbon, 470 Ohm 1/3 W.
R-16	27E152-3	Resistor, Carbon, 1500 Ohm 1 W.
R-17A, R-17B	27E1000-6	Resistor, Wirewound, Dual, 1300 Ohm 6.5 W.
R-18	27E560-3	Resistor, Carbon, 56 Ohm 1 W.
R-19	27E335	Resistor, Carbon, 3.3 Megohm 1/3 W.
R-20	27E105	Resistor, Carbon, 1 Megohm 1/3 W.
L-1	64E31	Antenna, Loop
T-1	20E565	Coil, R. F. Transformer
T-2	20E463	Coil, 1st I. F. Transformer
T-3	20E463	Coil, 2nd I. F. Transformer
T-4	22E50	Transformer, Output
T-5	20E566	Coil, Oscillator
S-1	1E42	Speaker, 4" x 6" P. M.
SW-1	29E20	Switch, Change-Over, AC-DC-BATT.
SR-1	57E4	Rectifier, Selenium

IMPORTANT: When ordering complete cabinet, or cabinet parts, BE SURE TO MENTION REQUIRED COLOR in addition to proper part number.

MISCELLANEOUS PARTS

Part No.	Part Name and Description
20E570	Complete Brown Cabinet Assembly, with Handle, Baffle, Grille, Screen, Dial Scale, Loop and Cabinet Back
20E570-2	Complete Green Cabinet Assembly, with Handle, Baffle, Grille, Screen; Dial Scale, Loop and Cabinet Back
20E571	Cabinet Assembly, less Back and Loop, but with Handle, Baffle, Grille, Screen and Dial Scale, Brown
20E571-2	Cabinet Assembly, less Back and Loop, but with Handle, Baffle, Grille, Screen and Dial Scale, Green
7E230	Cabinet Assembly, with Handle only—less Back, Loop, Baffle, Grille, Screen and Dial Scale, Brown
7E230-2	Cabinet Assembly, with Handle only—less Back, Loop, Baffle, Grille, Screen and Dial Scale, Green
7E233	Cabinet Back, Less Loop, with 47E13 Hinge Pin, Brown
7E233-2	Cabinet Back, Less Loop, with 47E13 Hinge Pin, Green
20E253-26	Dial Drive Cord
65E2	Dial Cord Tension Spring
35E28	Dial Pointer
36E61	Dial Scale, Calibrated, Polysterene Scale
5E62	Dial Backplate, Metal, Background for Dial Scale
20E249-3	B— Battery Connector Assembly
20E249-4	B+ Battery Connector Assembly
20E340-2	"A" Battery Cable With Plug
55E52-2	Handle Bracket, for Mounting Handle
52E31-7	Handle Cover, Plastic, Brown
52E31-8	Handle Cover, Plastic, Green
55E39-2	Handle Strap, Clock Spring Steel
47E13	Hinge Pin, for Cabinet Back
37E64	Tuning Knob, less Hub, for Brown Cabinet
37E64-2	Tuning Knob, less Hub, for Green Cabinet
37E66	Off-On-Vol. Knob, for Brown Cabinet
37E66-2	Off-On-Vol. Knob, for Green Cabinet
37E65	Knob Hub, for 37E64 Tuning Knob
37E65-2	Knob Hub, for 37E64-2 Tuning Knob
41E13	Line Cord and Plug
17E3-2	"A" Battery Plug
84E6	Stud, Shaft for Tuning Knob
23E2022-2	Diode Filter Plate, Capacitor and Resistor Assembly
23E2023-2	Ceramic Coupling Plate, Capacitor and Resistor Assembly

MOUNTING HARDWARE

Part No.	Part Name and Description
13E103-20	Clip, Holds Back to Cabinet
82E39-F10	Screw, No. 6-20 x ½ holds Chassis in Cabinet
10E43	Stud, Trimount, for mounting Speaker Baffle and Screen to Cabinet

©John F. Rider
Compliments of www.nucow.com

MODELS 1U-335-PG, 1U-335-PI, 1U-335-PM, 1U-335-PW, 335-PG, 335-PI, 335-PM, 335-PW

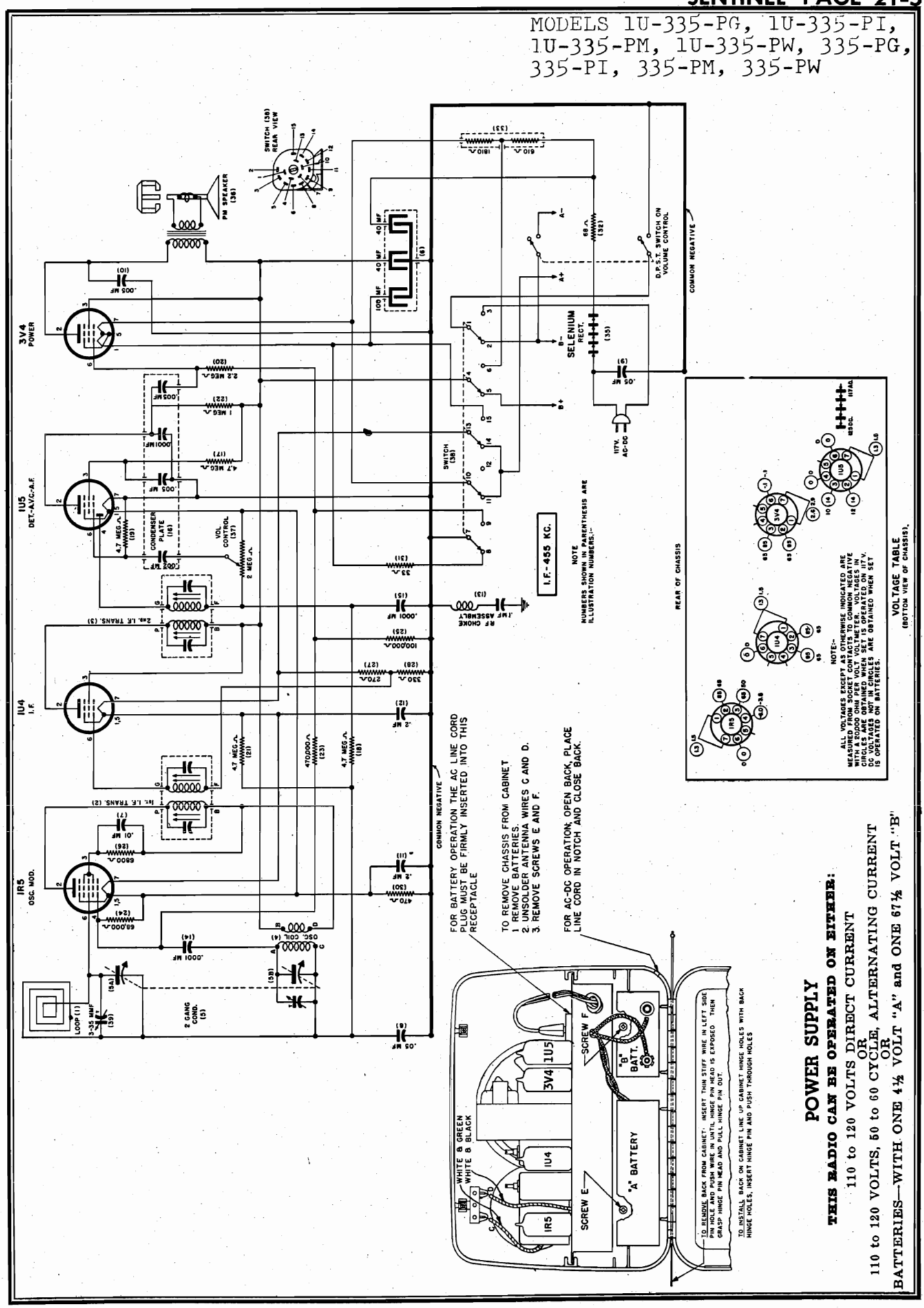

©John F. Rider

Compliments of www.nucow.com

ALIGNMENT PROCEDURE

Be sure to follow procedure carefully and in the order given—otherwise the receiver will be insensitive and the dial calibration incorrect. For alignment procedure, read tabulations from left to right. Make the adjustment marked (1) first, (2) next, (3) third.

IF RADIO HAS METAL PLATE ON BOTTOM OF CHASSIS BE SURE TO HAVE PLATE MOUNTED ON CHASSIS WHEN ALIGNING SET.

Before starting alignment:

(A) Check tuning dial adjustment by tuning gang condenser until plates touch maximum capacity stop (completely in mesh) at which point the dial indicator must be exactly even with the outside edge of the first 5 in the 55 calibration number at the low frequency end of the dial scale. If dial indicator does not point exactly to the outside edge, move pointer to correct position.

(B) Use an accurately calibrated test oscillator with some type of output measuring device.

(C) WHEN ADJUSTING THE 1730 KC OSCILLATOR TRIMMER, remove chassis from cabinet and disconnect the loop connection wires from the loop terminal strip. Attach a 1 megohm resistor across these connections and feed output of test oscillator across the 1 megohm resistor.

(D) THE 1400 KC LOOP ANTENNA TRIMMER should be adjusted only after all other adjustments have been made and with the set mounted in the cabinet. When aligning the 1400 KC Antenna Trimmer, couple test oscillator to receiver loop by: (1) make loop consisting of five to ten turns of No. 20 to No. 30 size wire, wound on a 2″ or 3″ form; (2) connect this loop across output of test oscillator; (3) place test oscillator loop near radio loop. BE SURE THAT NEITHER LOOP MOVES WHILE ALIGNING.

Steps	Set receiver dial to:	TEST OSCILLATOR			Refer to parts layout diagram for location of trimmers mentioned below:
		Adjust test oscillator frequency to:	Use dummy antenna in series with output of test oscillator consisting of:	Attach output of test oscillator to	
1	Any point where no interfering signal is received	Exactly 455 K. C.	0.2 Mfd. Condenser	High side to grid of 1R5 tube. Low side to chassis (common negative in Model 1U-335) through a .02 Mfd. blocking condenser.	Adjust each of the 2nd I.F. transformer trimmer adjustment screws for maximum output, then adjust each of the 1st I.F. transformer trimmer adjustment screws for maximum output.
2	Rotate gang condenser to minimum capacity	Exactly 1730 K. C.	See paragraph (C) above	See paragraph (C) above	Adjust 1730 K. C. oscillator trimmer for maximum output.
3	Approximately 1400 K. C.	Approx. 1400 K. C.	See paragraph (D) above	See paragraph (D) above	Adjust 1400 K. C. antenna trimmer for maximum output.

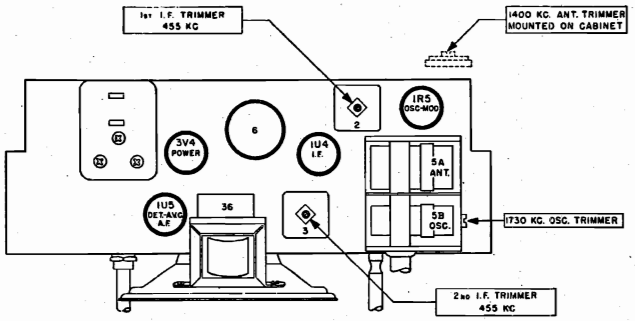

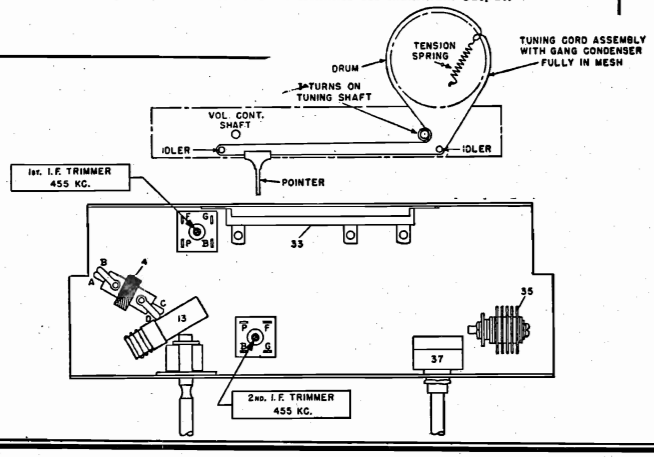

PART NO. 1U-316-P & 316-P-B

©John F. Rider

Compliments of www.nucow.com

MODELS 1U-335-PG, 1U-335-PI, 1U-335-PM, 1U-335-PW, 335-PG, 335-PI, 335-PM, 335-PW

PARTS LIST

Illus. No.	Part No.	Part Name	Description
1	64E32	Antenna	Loop
2	20E463	Coil	1st I.F. Transformer
3	20E463	Coil	2nd I.F. Transformer
4	20E338	Coil	Oscillator
5	24E40	Condenser	Tuning, Two Gang
*6	25E28	Condenser	Dry Electrolytic 40-40 Mfd. 150 V. & 100 Mfd. 10 V.
OR			
*6	25E29	Condenser	Dry Electrolytic, 40-40 Mfd. 150 V. & 100 Mfd. 10 V. (1U-335P Only)
7	23E211	Condenser	Tubular, .01 Mfd. 200 V.
8	23E216	Condenser	Tubular, .05 Mfd. 200 V.
9	23E416	Condenser	Tubular, .05 Mfd. 400 V.
10	23E408	Condenser	Tubular, .005 Mfd. 400 V.
11	23E220	Condenser	Tubular, .2 Mfd. 200 V.
12	23E220	Condenser	Tubular, .2 Mfd. 200 V.
13	20E407	Choke	R. F. (1U-335P Only)
14	23E24	Condenser	Ceramic, .0001 Mfd.
15	23E24	Condenser	Ceramic, .0001 Mfd.
16	23E2024	Condenser	Ceramic Condenser Plate
17	27E475	Resistor	Carbon, 4.7 Megohm, 1/3 W.
18	27E475	Resistor	Carbon, 4.7 Megohm, 1/3 W.
19	27E475	Resistor	Carbon, 4.7 Megohm, 1/3 W.
20	27E225	Resistor	Carbon, 2.2 Megohm, 1/3 W.
21	27E475	Resistor	Carbon, 4.7 Megohm, 1/3 W.
22	27E105	Resistor	Carbon, 1 Megohm, 1/3 W.
23	27E474	Resistor	Carbon, 470,000 Ohm, 1/3 W.
24	27E683	Resistor	Carbon, 68,000 Ohm, 1/3 W.
25	27E104	Resistor	Carbon, 100,000 Ohm, 1/3 W.
26	27E682	Resistor	Carbon, 6,800 Ohm, 1/3 W.
27	27E271	Resistor	Carbon, 270 Ohm, 1/3 W.
28	27E331	Resistor	Carbon, 330 Ohm, 1/3 W.
30	27E471	Resistor	Carbon, 470 Ohm, 1/3 W.
31	27E330-2	Resistor	Carbon, 33 Ohm, 1/2 W.
32	27E680-3	Resistor	Carbon, 68 Ohm, 1 W.
33	27E1005	Resistor	Wire Wound, 1810 and 610 Ohms, 8 W.
*35	57E1-4	Rectifier	Selenium
OR			
*35	57E1-5	Rectifier	Selenium
36	1E29	Speaker	4" P.M.
*37	28E30	Volume Control	With D.P.S.T. Switch, 2 Megohm
38	29E20	Switch	Spring Return Type
39	24E33	Condenser	Trimmer 3-35 MMF. Working Range

IMPORTANT: When ordering complete cabinet, or cabinet parts, BE SURE TO MENTION REQUIRED COLOR in addition to proper part number.

MISCELLANEOUS PARTS

Part No.	Part Name	Description
20E577	Cabinet	Complete Cabinet Assembly with Handle, Baffle, Loop and Cabinet Back, Red
20E577-2	Cabinet	Complete Cabinet Assembly with Handle, Baffle, Loop and Cabinet Back, Brown
20E577-3	Cabinet	Complete Cabinet Assembly with Handle, Baffle, Loop and Cabinet Back, White
20E577-4	Cabinet	Complete Cabinet Assembly with Handle, Baffle, Loop and Cabinet Back, Green
20E578	Cabt., less back	Cabinet Assembly, less Back, but with Handle, Baffle and Loop, Red
20E578-2	Cabt., less back	Cabinet Assembly, less Back, but with Handle, Baffle and Loop, Brown
20E578-3	Cabt., less back	Cabinet Assembly, less Back, but with Handle, Baffle and Loop, White
20E578-7	Cabt., less back	Cabinet Assembly, less Back, but with Handle, Baffle and Loop, Green
7E236	Cabinet Back	Back for cabinet with 47E13-2, Hinge Pin, Red
7E236-2	Cabinet Back	Back for cabinet with 47E13-2, Hinge Pin, Brown
7E236-3	Cabinet Back	Back for cabinet with 47E13-2, Hinge Pin, White
7E236-5	Cabinet Back	Back for cabinet with 47E13-2, Hinge Pin, Green
20E253-19	Dial Cord	Dial Drive Cord
65E2	Dial Spring	Dial Cord Tension Spring
20E348	Dial Shaft	Drive Shaft Assembly
5E32-2	Backplate	Dial Backplate
35E8-13	Dial Pointer	Dial Indicator
20E249	Batt. Connector	B— Battery Connector Assembly
20E249-2	Batt. Connector	B+ Battery Connector Assembly
20E340	"A" Batt. Cable	"A" Battery Cable with Plug
55E52	Handle Bracket	Bracket for Mounting Handle
52E31-9	Handle Cover	Plastic Cover, Red
52E31-10	Handle Cover	Plastic Cover, Brown
52E31-11	Handle Cover	Plastic Cover, White
52E31-12	Handle Cover	Plastic Cover, Green
55E39	Handle Strap	Clock Spring Steel
47E13-2	Hinge	Hinge Pin for Cabinet Back
37E17-15	Knob	Red
37E17-16	Knob	Brown
37E17-17	Knob	White
37E17-18	Knob	Green
41E14	Line Cord	Line Cord and Plug
17E3-2	Plug	"A" Battery Plug
20E579	Speaker Baffle	Baffle Assembly with Grille Cloth

MOUNTING HARDWARE

Part No.	Part Name	Description
13E103-9	Clip	Holds Back to Cabinet
82E37-F10	Screw	6-20x3/8—Holds 13E103-9 Clip to Cabt.
82E36-F10	Screw	6-20x5/16—For Mounting Chassis
13E103-17	Speednut	For Mounting Speaker Baffle to Cabt.

©John F. Rider

Compliments of www.nucow.com

MODELS 1U-339-K,
339-K

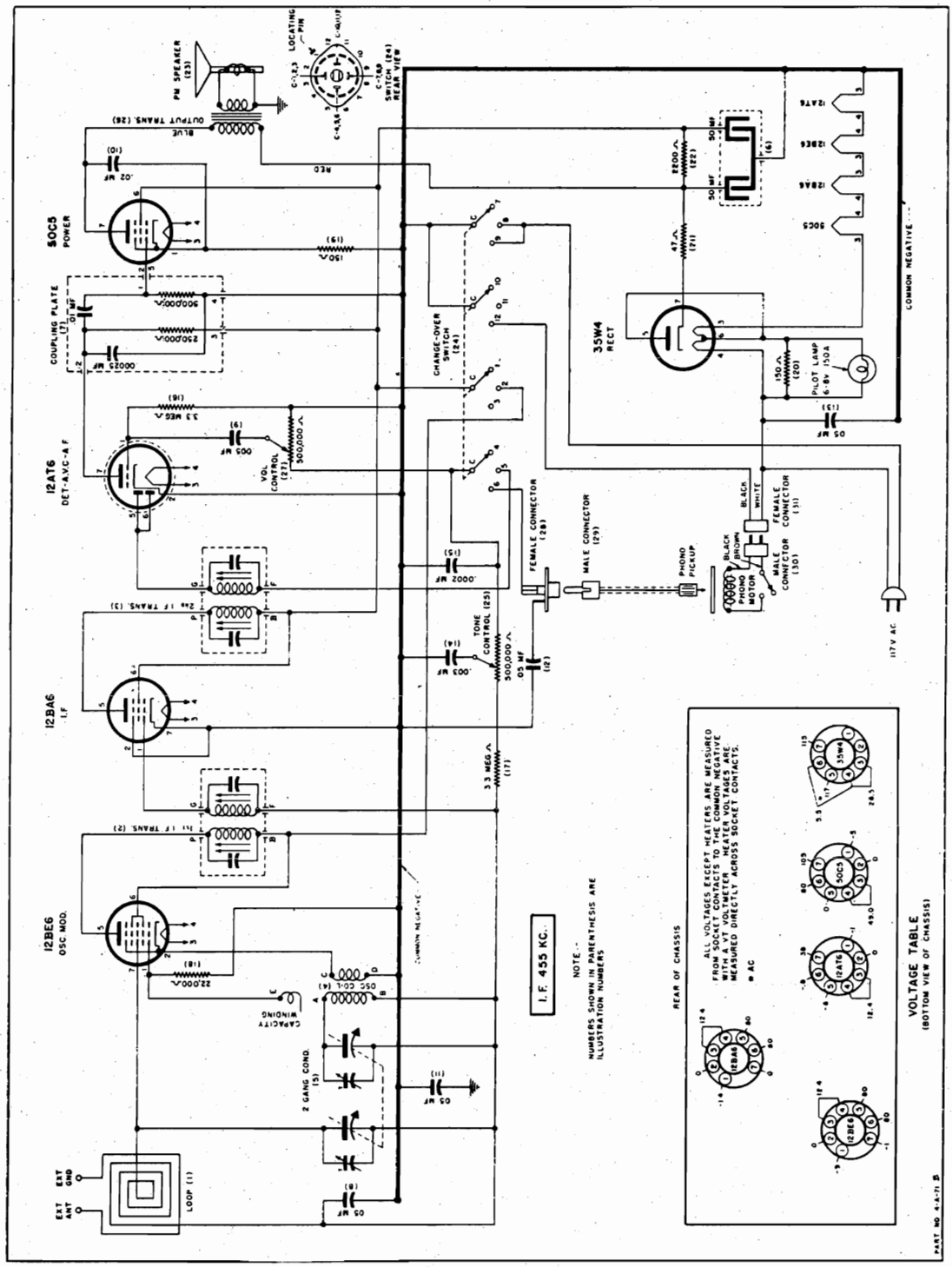

©John F. Rider

Compliments of www.nucow.com

ALIGNMENT PROCEDURE

For alignment procedure read tabulations from left to right, and make the adjustment marked (1) first, (2) next, (3) third.

Before starting alignment:

(A) Check tuning dial adjustment by tuning gang condenser until plates touch maximum capacity stop (completely in mesh) at which point the dial needle must be exactly even with the last line at the low frequency end of the dial calibration. If the dial needle does not point exactly to the last line move to correct position by holding dial needle shank at the point where it attaches to its drum while turning the drum on the gang condenser.

(B) Use an accurately calibrated test oscillator with some type of output measuring device.

(C) THE LOOP MAY BE LEFT IN THE CABINET and the chassis with its mounting board pulled out of the cabinet just far enough for adjustment of the trimmers, or the loop and chassis may be removed from the cabinet and the loop placed in the same position and plane it will be in when both are mounted in cabinet—approximately 1″ space between receiver loop and chassis. Couple test oscillator to receiver loop by: (1) make loop consisting of 5 to 10 turns of No. 20 to No. 30 size wire, wound on a 2″ or 3″ form; (2) connect this loop across output of test oscillator; (3) place test oscillator loop near radio loop. BE SURE THAT NEITHER LOOP MOVES WHILE ALIGNING.

Steps	Set receiver dial to:	TEST OSCILLATOR			Refer to parts layout diagram for location of trimmers mentioned below:
		Adjust test oscillator frequency to:	Use dummy antenna in series with output of test oscillator consisting of:	Attach output of test oscillator to:	
1	Any point where no interfering signal is received	455 K. C.	.02 MFD. See Paragraph (C) Above	High side to rear stator plates of tuning condenser. Low side to chassis (common negative in 1U339K) through a .02 Mfd. blocking condenser.	Adjust each of the second I. F. transformer trimmers for maximum output—then adjust each of the first I.F. trimmers for maximum output.
2	Exactly 1650 K. C.	Exactly 1650 K. C.	See Paragraph (C) Above	See Paragraph (C) Above	Adjust 1650 K. C. oscillator trimmer for maximum output.
3	Approx. 1400 K. C.	Approx. 1400 K. C.	See Paragraph (C) Above	See Paragraph (C) Above	Adjust 1400 K. C. antenna trimmer for maximum output.

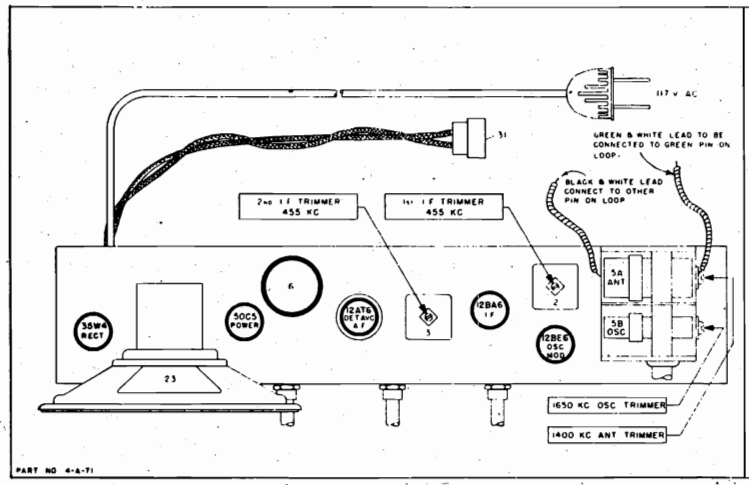

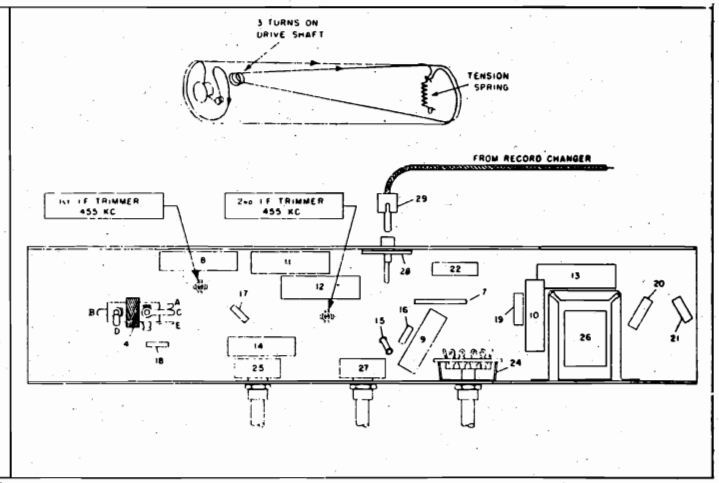

©John F. Rider
Compliments of www.nucow.com

TO REMOVE TUBES OR REPLACE PILOT LIGHT it is necessary to remove chassis from cabinet. To do this:

A. Take knobs off control shafts.

B. Rest cabinet on its side.

C. Unscrew the four copper colored screws that are used to hold mounting board (on which chassis rests) to the cabinet.

D. Gently pull mounting board and chassis from cabinet.

DO NOT REMOVE THE TWO SCREWS USED TO HOLD THE CHASSIS TO THE MOUNTING BOARD.

RADIO PARTS LIST

Illus. No.	Part No.	Part Name	Description
1	64E21	Antenna	Loop
2	20E402	Coil	1st I. F. Transformer
3	20E402	Coil	2nd I. F. Transformer
4	20E397	Coil	Oscillator
5	24E47	Condenser	2 Gang, Tuning
*6	25E1	**Condenser**	**Dry Elect. 50-50 MFD. 150 V.**
	OR		
*6	25E16	**Condenser**	**Dry Elect. 50-50 MFD. 150 V. (in Model 1U339 only)**
7	23E2023	Condenser	Ceramic Coupling Plate
8	23E216	Condenser	Paper .05 MF. 200 V.
9	23E208	Condenser	Paper .005 MF. 200 V.
10	23E413	Condenser	Paper .02 MF. 400 V.
11	23E416	Condenser	Paper .05 MF. 400 V. (in Model 1U339 only)
12	23E416	Condenser	Paper .05 MF. 400 V.
13	23E416	Condenser	Paper .05 MF. 400 V.
14	23E406	Condenser	Paper .003 MF. 400 V.
15	23E41	Condenser	Mica, .0002 MF.
	OR		
15	23E2027-3	Condenser	Ceramic, .0002 MF.
16	27E335	Resistor	Carbon, 3.3 MEG OHM 1/3 W.
17	27E335	Resistor	Carbon, 3.3 MEG OHM 1/3 W.
18	27E223	Resistor	Carbon, 22,000 OHM 1/3 W.
19	27E151	Resistor	Carbon, 150 OHM 1/3 W.
20	27E151	Resistor	Carbon, 150 OHM 1/3 W.
21	27E470-2	Resistor	Carbon, 47 OHM 1/2 W.
22	27E222-3	Resistor	Carbon, 2200 OHM 1 W.
23	1E33	Speaker	5" PM
24	29E23	Switch	"Off-Radio-Phono"
*25	28E41	**Tone Control**	**500,000 Ohm**
26	22E8-2	Transformer	Output
*27	28E46	**Vol. Control**	**500,000 Ohm**
28	17E21-5	Connector	Female, for Pickup
29	17E21-7	Plug	Male Phono Plug for Pickup
30	17E21-2	Plug	Male, Attached to Phono Motor
31	20E184-1	Socket	Female, 2 Contact, for Phono Motor

*Fast Moving Items.

MISCELLANEOUS PARTS

Part No.	Part Name	Description
7E246	Cabinet	Cabinet only, less Frontplate Bezel Assembly
20E428-2	Cabt. Frontplate	Bezel, Frontplate with calibrated crystal
7E171-3	Cabinet Bottom	Cardboard Cabinet Bottom (in Model 1U339 only)
7E171-4	Cabinet Bottom	Cardboard Cabinet Bottom
41E8	Cord	8 Ft. Rubber Line Cord
30E116-3	Dial Plate Assembly	Dial Back Plate Assembly
20E253-21	Dial Cord	Dial Drive Cord
36E64	Dial Scale	Calibrated Scale
20E394	Dial Shaft & Pulley	Drive Shaft & Pulley Assembly with Mounting Bracket
68E16	Dial Shaft	Drive Shaft only with 12E124 "C" Washer
35E25-4	Dial Pointer	Dial Indicator with Set Screw
65E2	Dial Spring	Tension Spring for Drive Cord
37E56	Knob	
37E56-2	Knob	With Dot, for "Off-Radio-Phono" Switch
17E34	Pilot Lamp Socket	Pilot Lamp Socket Assembly
40E1	Pilot Lamp	6-8 Volt, .150 Amp. Type 47

MOUNTING HARDWARE

Part No.	Part Name	Description
P-122	Lid Stop	Cabinet Lid Stop
13E103-1	Speed Nut	For Mounting Front Plate Bezel to Cabt.
82E1111-F10	Screw	6x7/8 Hx Hd—no slot—for holding Chassis to Mounting Board
71E162	Screw	3-48x3/16" for Dial Pointer
86E227-F43	Screw	6x7/8 Rd Hd Copper Colored Iron Wood Screw for attaching Chassis Mtg. Board to Cabt.
86E183-F49	Screw	4x3/8 Rd Hd Iron Wood Screw for Mtg. Cardboard to Cabinet Bottom
12E124	Washer	"C" Washer for Dial Drive Shaft

©John F. Rider

Compliments of www.nucow.com

MODEL 570

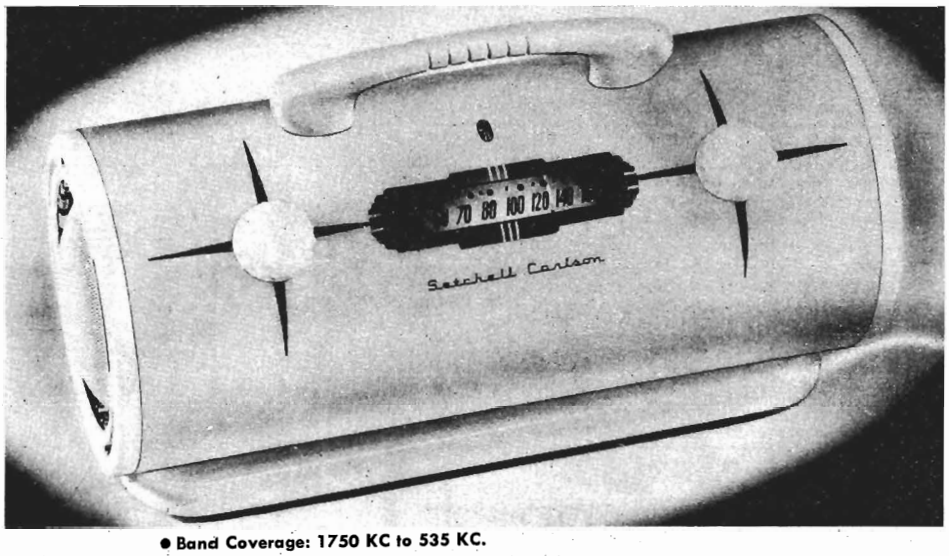

- Band Coverage: 1750 KC to 535 KC.
- Operates on 115 Volts—A. C. or D. C.
- Four tubes plus rectifier { 1-12BE6 Det. Osc., 1-12BA6 I. F. Amp., 1-12AV6 2nd Det. 1st Audio, 1-50B5 Output, 1-35W4 Rect.

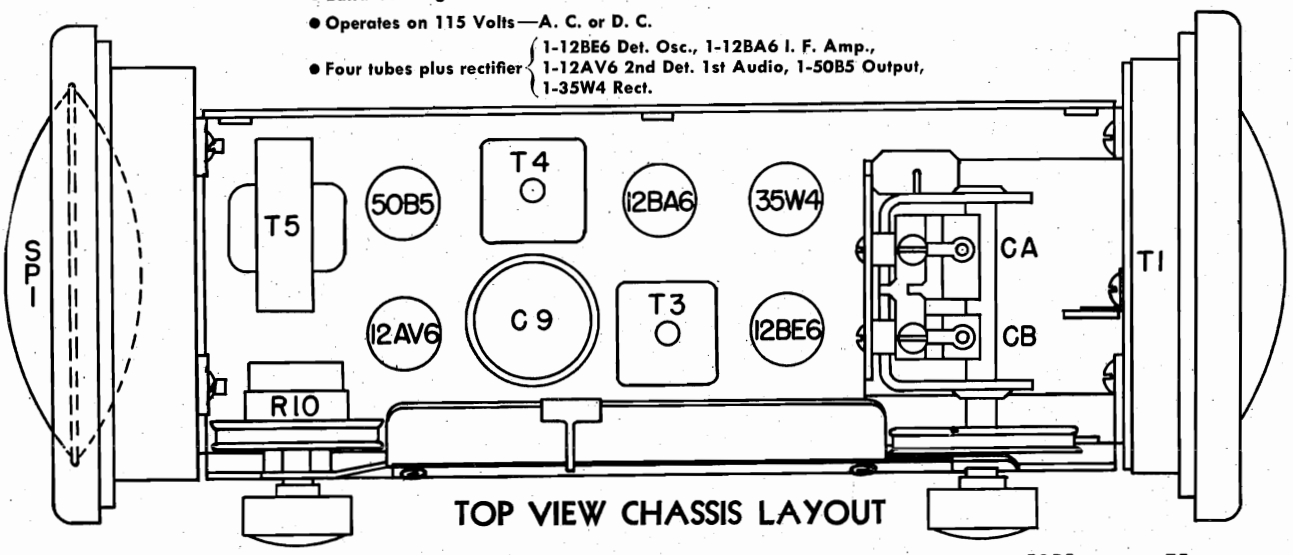

TOP VIEW CHASSIS LAYOUT

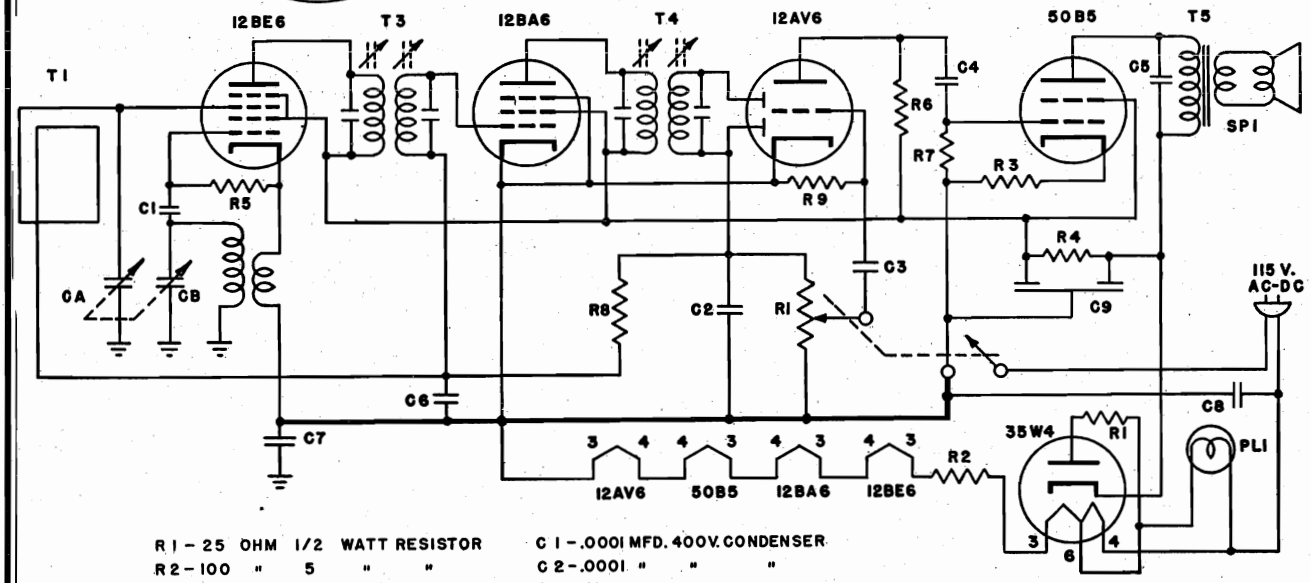

R1 - 25	OHM	1/2	WATT	RESISTOR	C1 - .0001	MFD.	400V.	CONDENSER	
R2 - 100	"	5	"	"	C2 - .0001	"	"	"	
R3 - 180	"	1/2	"	"	C3 - .01	"	"	"	
R4 - 1500	"	"	"	"	C4 - .01	"	"	"	
R5 - 25M	"	"	"	"	C5 - .01	"	"	"	
R6 - 500M	"	"	"	"	C6 - .05	"	200V.	"	
R7 - 500M	"	"	"	"	C7 - .1	"	400V.	"	
R8 - 5MEG.	"	"	"	"	C8 - .1	"	"	"	
R9 - 5MEG.	"	"	"	"	C9 - 50+50	"	150V.	"	
R10 - 500M	"	POT. WITH SWITCH			CA-B - GANG CONDENSER				

T1 - LOOP ANTENNA
T2 - OSC. COIL
T3 - 455 KC. I.F.
T4 - 455 KC. I.F.
T5 - O. P. TRANSFORMER
PLI - NO. 44 PILOT LAMP
SPI - PILLOW SPEAKER

©John F. Rider

Compliments of www.nucow.com

MODELS 580,
5803, Ch. 58A

MODEL 580, 5803 SPECIFICATIONS

- Band coverage: 540 KC to 1900 KC.
- Ten-inch Alnico V - P. M. console speaker.
- 3.2-ohm speaker terminals (for T. V.)
- Five tubes, plus rectifier—
  1—12BA6 R. F., 1—12BE6 Mixer,
  1—12BA6 I. F., 1—12AV6 2nd Detector,
  1st Audio, 1—6V6 Output, 1—6x5 Rectifier.
- Wattage load: 45 watts.
- Undistorted power output: 2 watts.

R 1—400 Ohm 1 Watt Resistor
R 2—500 Ohm 2 Watt Resistor
R 3— 3K Ohm ½ Watt Resistor
R 4—10K Ohm 1 Watt Resistor
R 5—25K Ohm ½ Watt Resistor
R 6—39K Ohm 1 Watt Resistor
R 7—50K Ohm ½ Watt Resistor
R 8—500K Ohm ½ Watt Resistor
R 9—500K Ohm ½ Watt Resistor
R10—2 Meg. Ohm ½ Watt Resistor
R11—5 Meg. Ohm ½ Watt Resistor
R12—5 Meg. Ohm ½ Watt Resistor
R13—500K Potentiometer

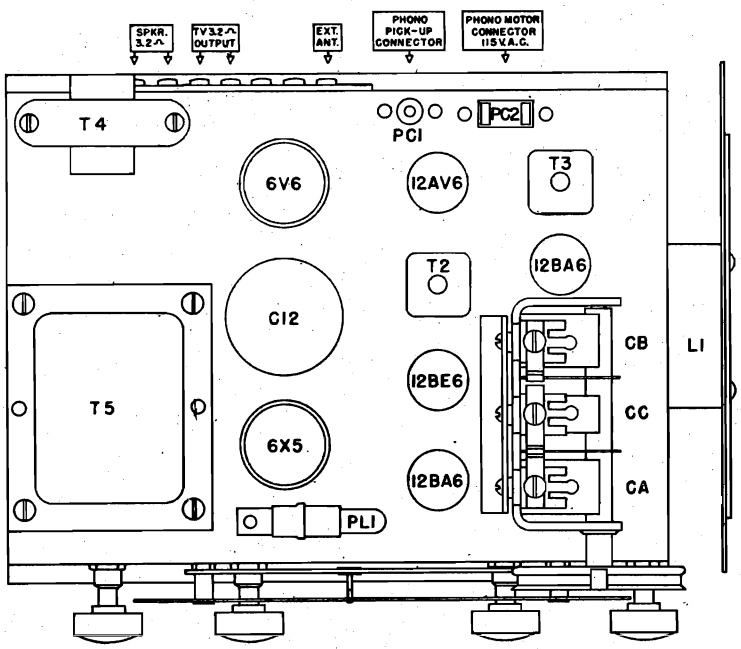

C 1—100 Mmfd. 400 V. Condenser
C 2—250 Mmfd. 400 V. Condenser
C 3—250 Mmfd. 400 V. Condenser
C 4— .0025 Mfd. 400 V. Condenser
C 5— .01 Mfd. 400 V. Condenser
C 6— .01 Mfd. 400 V. Condenser
C 7— .05 Mfd. 200 V. Condenser
C 8— .05 Mfd. 400 V. Condenser
C 9— .1 Mfd. 400 V. Condenser
C10— .1 Mfd. 400 V. Condenser
C11— 20 Mfd. 450 V. Condenser
C12—20+20 Mfd. 475 V. Condenser
CA, B and C Gang Condenser

oop Antenna
L1 —Oscillator Coil
L3 —Antenna Coupling Coil
T1 —R. F. Transformer
T2 —455 KC I. F. Transformer
T3 —455 KC I. F. Transformer
T4 —Audio Output Transformer
T5 —Power Transformer
PL1—No. 47 Pilot Lamp
S1 —2-Pole 2-Pos. Switch
S2 —3-Pole 4-Pos. Switch
PC1—Phono Pickup Connector
PC2—Phono Motor Connector 115 V. AC

ALIGNMENT

Connect signal generator to mixer grid No. 12BE6 through an .01 condenser and align I.F.'s T2 and T3 to 455 KC. Use output meter across output transformer or vacuum tube volt meter for highest AVC voltage across condenser C7.

Align oscillator trimmer (CC) to dial calibration at approximately 1400 KC. Adjust antenna and RF section (CA and CB) for best sensitivity at approximately 1400 KC. Low frequency end alignment can be made by bending condenser plates.

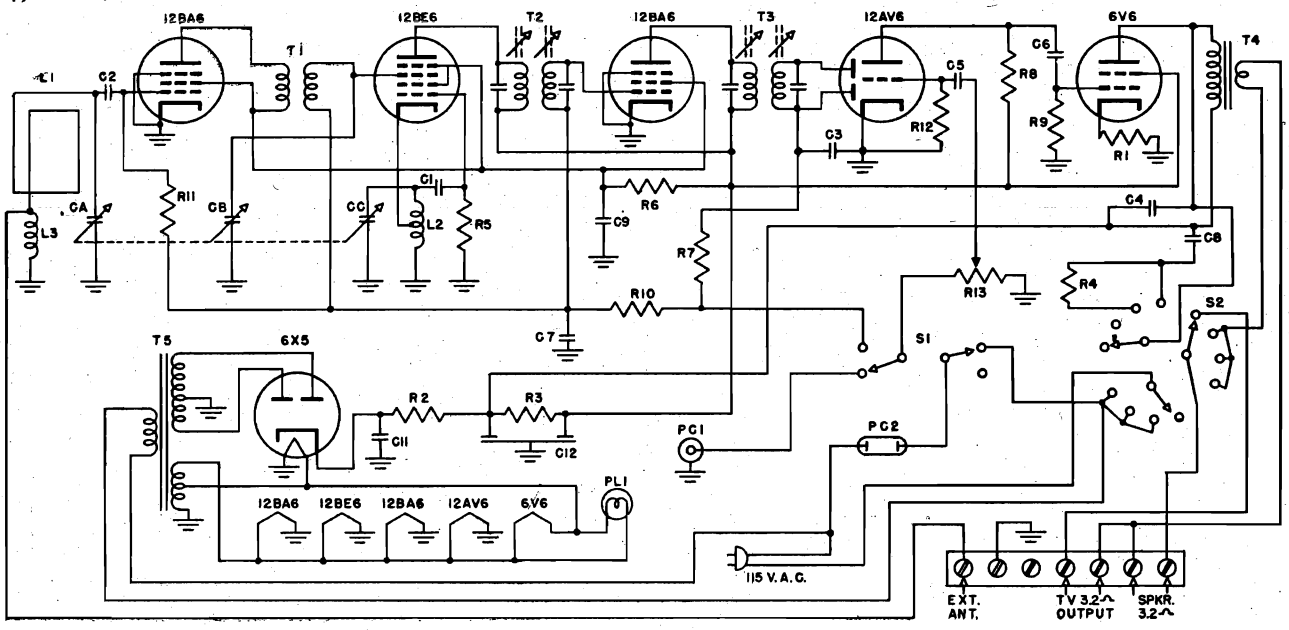

SCHEMATIC DIAGRAM

©John F. Rider

Compliments of www.nucow.com

MODELS 5110,
51103, Ch. 511A

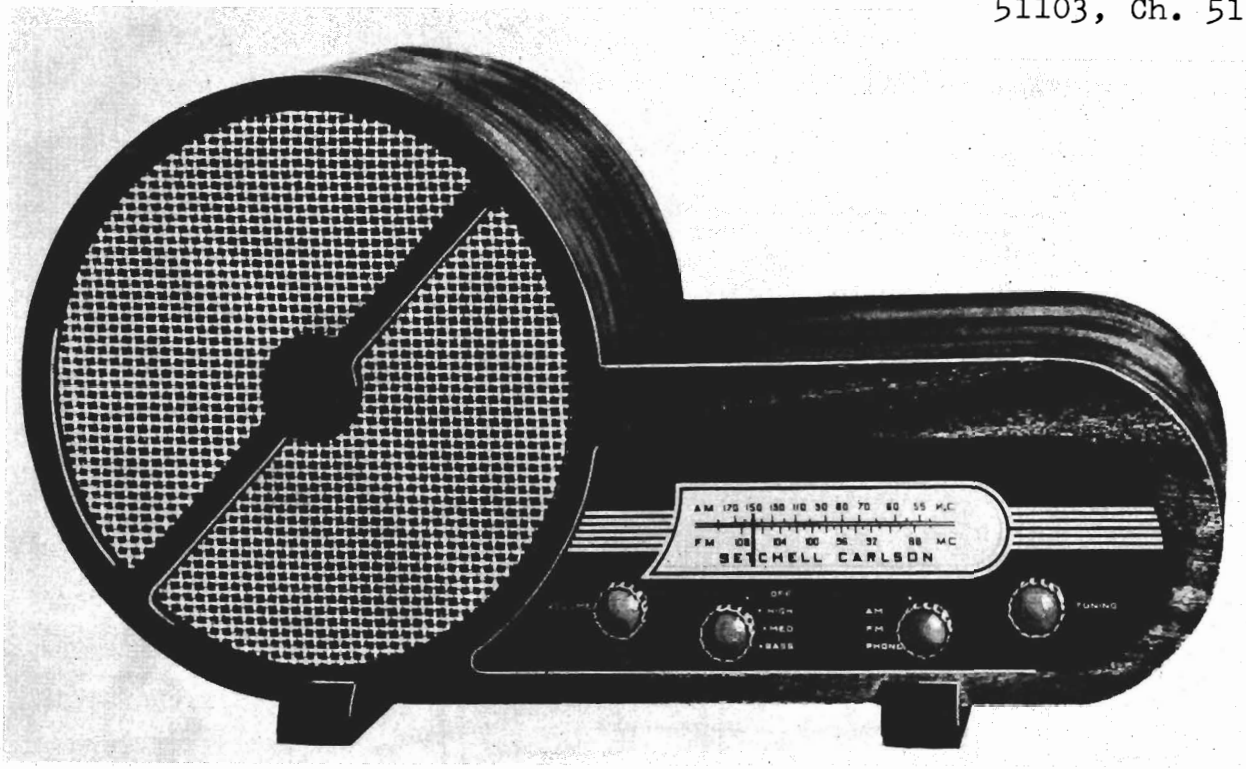

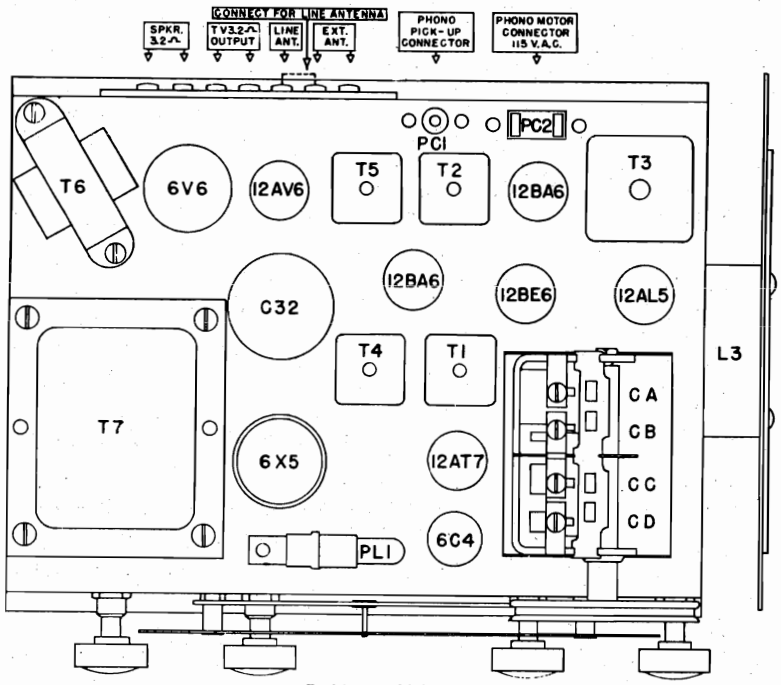

F. M. ALIGNMENT

Align I.F.'s, T1, T2, primary T3 to 10.7 KC by connecting unmodulated signal generator to grid of 12AT7 through .01 condenser. Use vacuum tube volt meter to read highest AVC voltage across C30 condenser. Adjust secondary T3 (ratio detector coil, top slug) for minimum hiss level (off station).
Adjust oscillator trimmer to correspond with dial calibration at 100 mc and RF trimmer for maximum sensitivity.

A. M. ALIGNMENT

Connect signal generator to mixer grid (12BE6) through .01 condenser and align I.F.'s T4 and T5 to 455 KC. Use output meter across output transformer or vacuum tube volt meter for highest AVC voltage across condenser C27. Align oscillator trimmer to dial calibration at approximately 1400 KC and antenna trimmer for best sensitivity.

MODEL 51103 5110 SPECIFICATIONS

- A. M. band coverage: 535 KC to 1800 KC.
- F. M. band coverage: 110 MC to 87 MC.
- Ten-inch Alnico V - P. M. console speaker.
- 3.2-ohm speaker terminals (for T. V.)
- Wattage load: A. M.—40 watts
  F. M.—50 watts
- Undistorted power output: 2 watts.
- Eight tubes, plus rectifier—
  6C4, 12AT7, 12BA6, 12BE6, 12BA6, 6V6, 12AL5, 12AV6, 6X5 Rectifier.

©John F. Rider

Compliments of www.nucow.com

MODELS 5110, 5103, Ch. 511A

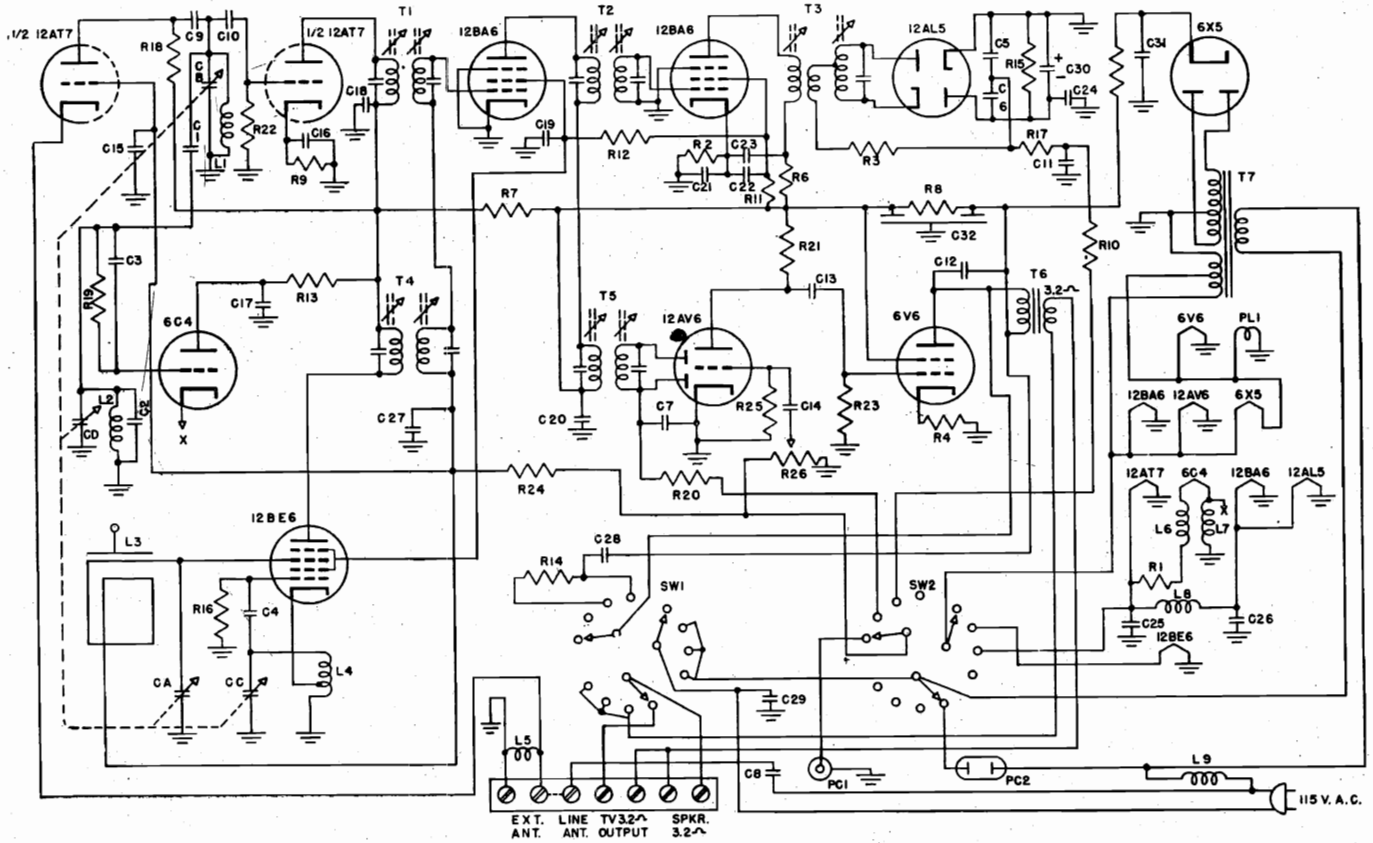

SCHEMATIC DIAGRAM

R1	42 Ohm	2	Watt	Resistor
R2	68 Ohm	½	Watt	Resistor
R3	68 Ohm	½	Watt	Resistor
R4	400 Ohm	1	Watt	Resistor
R5	500 Ohm	5	Watt	Resistor
R6	500 Ohm	½	Watt	Resistor
R7	500 Ohm	½	Watt	Resistor
R8	2000 Ohm	10	Watt	Resistor
R9	2500 Ohm	½	Watt	Resistor
R10	5000 Ohm	½	Watt	Resistor
R11	10K Ohm	1	Watt	Resistor
R12	10K Ohm	1	Watt	Resistor
R13	10K Ohm	1	Watt	Resistor
R14	10K Ohm	1	Watt	Resistor
R15	15K Ohm	½	Watt	Resistor
R16	25K Ohm	½	Watt	Resistor
R17	25K Ohm	½	Watt	Resistor
R18	50K Ohm	½	Watt	Resistor
R19	50K Ohm	½	Watt	Resistor
R20	50K Ohm	½	Watt	Resistor
R21	200K Ohm	½	Watt	Resistor
R22	500K Ohm	½	Watt	Resistor
R23	500K Ohm	½	Watt	Resistor
R24	5 Meg. Ohm	½	Watt	Resistor
R25	15 Meg. Ohm	½	Watt	Resistor
R26	500K Ohm			Potentiometer

L1—FM RF Coil
L2—FM Oscillator Coil
L3—AM Loop Antenna
L4—AM Oscillator Coil
L5—FM Antenna Choke
L6—Filament Choke
L7—Filament Choke
L8—Filament Choke
L9—FM Line Antenna Choke

T1—10.7 Meg. I. F. Transformer
T2—10.7 Meg. I. F. Transformer
T3—10.7 Meg. Ratio Detector
T4—455 Meg. I. F. Transformer
T5—455 Meg. I. F. Transformer
T6—Audio O. P. Transformer
T7—Power Transformer

SW1—3-Pole 4-Pos. Off-On Tone Switch
SW2—3-Pole 4-Pos. AM—FM Phono Switch
PC1—Phono Pickup Connector
PC2—Phono Motor Connector 115 V. AC
PL1—No. 47 Pilot Light

C1	1.5	Mmfd.	400 V.	Condenser	
C2	14	Mmfd.	400 V.	N220	
C3	100	Mmfd.	400 V.	Tubular	Ceramic
C4	100	Mmfd.	400 V.	Tubular	Ceramic
C5	100	Mmfd.	400 V.	Tubular	Ceramic
C6	100	Mmfd.	400 V.	Tubular	Ceramic
C7	100	Mmfd.	400 V.	Tubular	Ceramic
C8	100	Mmfd.	400 V.	Tubular	Ceramic
C9	250	Mmfd.	400 V.	Tubular	Ceramic
C10	250	Mmfd.	400 V.	Tubular	Ceramic
C11	.0015	Mfd.	400 V.	Mica	Condenser
C12	.0025	Mfd.	400 V.	Paper	Condenser
C13	.01	Mfd.	400 V.	Paper	Condernser
C14	.01	Mfd.	400 V.	Paper	Condenser
C15	.01	Mfd.	400 V.	Disc	Ceramic
C16	.01	Mfd.	400 V.	Disc	Ceramic
C17	.01	Mfd.	400 V.	Disc	Ceramic
C18	.01	Mfd.	400 V.	Disc	Ceramic
C19	.01	Mfd.	400 V.	Disc	Ceramic
C20	.01	Mfd.	400 V.	Disc	Ceramic
C21	.01	Mfd.	400 V.	Disc	Ceramic
C22	.01	Mfd.	400 V.	Disc	Ceramic
C23	.01	Mfd.	400 V.	Disc	Ceramic
C24	.01	Mfd.	400 V.	Disc	Ceramic
C25	.01	Mfd.	400 V.	Disc	Ceramic
C26	.01	Mfd.	400 V.	Disc	Ceramic
C27	.05	Mfd.	200 V.	Paper	Condenser
C28	.05	Mfd.	400 V.	Paper	Condenser
C29	.1	Mfd.	400 V.	Paper	Condenser
C30	4	Mfd.	50 V.	Electro.	Condenser
C31	20	Mfd.	450 V.	Electro.	Condenser
C32	20+20	Mfd.	475 V.	Electro.	Condenser

CA, B, C, D Gang Condenser AM-FM

©John F. Rider

Compliments of www.nucow.com

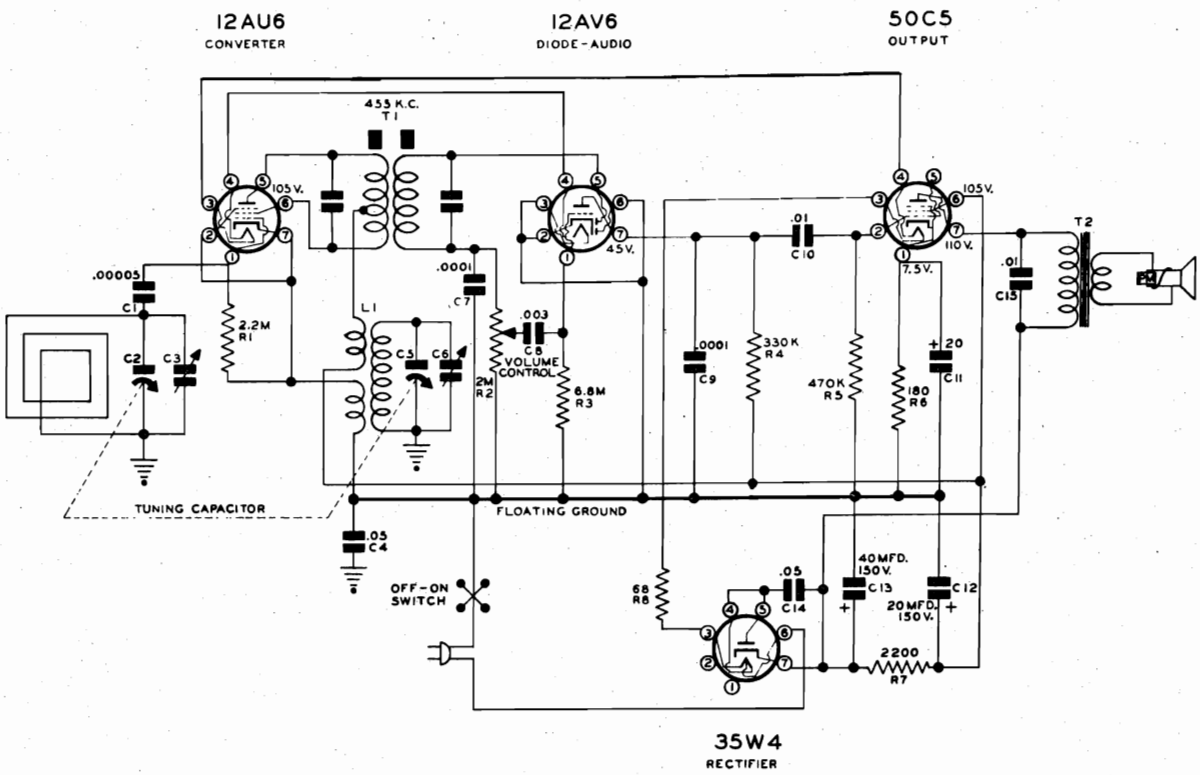

ALIGNMENT PROCEDURE

Step No.	Position of Gang	Signal Generator Frequency	Generator Connection	Dummy Antenna	Adjustment	Type of Adjustment
1.	Open	455 KC.	Rear Gang Terminal	.1 Mfd.	Slugs Top and Bottom in can.	Adjust for Maximum Output
2.	Open	1620 KC.	Dummy Antenna	2 Turns of Hookup Wire 6" in Dia. (Place Approx. a Foot from and in Same Plane as Loop)	Front Gang Trimmer	Adjust for Maximum Output
3.	1400 KC	1400 KC			Rear Gang Trimmer	Adjust for Maximum Output
4.	600 KC	600 KC			—	Check Gang Alignment

Schematic Location	Sonora Part No.	DESCRIPTION
C1	N-6385	Condenser, Ceramic 50 MMFD. 500V.
C4	N-1345	Condenser, Paper .05 MFD. 200V.
C7, C9	N-6015	Condenser, Ceramic 100 MMFD. 500V.
C8	N-2063	Condenser, Paper .003 MFD. 600V.
C10,C15	N-1344	Condenser, Paper .01 MFD. 400V.
C11, C12, C13	N-7153	Electrolytic { 20 MFD. 15V. / 20 MFD. 150V. / 40 MFD. 150V. }
C14	N-1346	Condenser, Paper .05 MFD. 400V.
R1	N-4277	Resistor 2.2 Megohm ½W 20%
		Volume Control—2.0 Megohm

Schematic Location	Sonora Part No.	DESCRIPTION
R2	N-7142	Resistor 6.8 Megohm ½W 20%
R3	N-4028	Resistor 330,000 Ohm ½W 20%
R4	N-4423	Resistor 470,000 Ohm ½W 20%
R5	N-4027	Resistor 180 Ohm ½W 10%
R6	N-4067	Resistor 2,200 Ohm ½W 10%
R7	N-4896	Resistor 68 Ohm 2.0W 10%
R8	N-6014	Transformer, I.F.
T1	N-7694	Oscillator Coil
L1	N-7725	Loop Antenna Coil
	N-7670	Variable Capacitor
	N-7141	Speaker, 4" PM with Output Transformer
	N-7824	

N-7839

©John F. Rider

Compliments of www.nucow.com

MODEL 306

POWER SUPPLY - 110 to 120 Volt, 60 Cycle Only.

GROUND - No ground connection should be used.

TUBES - 5 Tubes (inc. rectifier) are used. See label on bottom of cabinet.

TUNING RANGE - 535 to 1620 Kilocycles

AERIAL SYSTEM - Built-in "Loop" aerial. Provision is made at the rear of cabinet for connecting an external antenna if required.

ALIGNMENT PROCEDURE

STEP NO.	POSITION OF GANG	SIGNAL GENERATOR FREQUENCY	GENERATOR CONNECTION	DUMMY ANTENNA	TYPE OF ADJUSTMENT	ADJUSTMENT
1.	OPEN	455 KC.	REAR GANG TERMINAL.	.1 MFD.	T2, C9 & C8	ADJUST FOR MAXIMUM OUTPUT
2.	OPEN	1620 KC.	LOOP	.0002 MFD.	FRONT GANG TRIMMER	ADJUST FOR MAXIMUM OUTPUT
3.	1400 KC.	1400 KC.	LOOP	.0002 MFD.	REAR GANG TRIMMER	ADJUST FOR MAXIMUM OUTPUT
4.	600 KC	600 KC.	LOOP	.0002 MFD.		CHECK GANG ALIGNMENT

SCHEMATIC LOCATION	PART NUMBER	DESCRIPTION
C19, C20	N-5051	Capacitor - Electrolytic - 40 MFD. 150 V. 40 MFD. 150 V.
C5,C11	N-6015	Capacitor - Ceramic 100 MMFD. 500V. 20%
C12	N-7549	Capacitor - Ceramic 100 MMFD. 500V. 10%
C15	N-6488	Capacitor - Ceramic 250 MMFD. 500V. 20%
C13	N-4894	Capacitor - Paper .005 MFD. 600V.
C16	N-1344	Capacitor - Paper .01 MFD. 400V.
C18	N-1376	Capacitor - Paper .02 MFD. 400V.
C6,C7,C14	N-1345	Capacitor - Paper .05 MFD. 200V.
C21	N-1346	Capacitor - Paper .05 MFD. 400V.
C10	N-4957	Capacitor - Paper .09 MFD. 200V.
C17	N-1623	Capacitor - Paper .1 MFD. 400V.
R5	N-5757	Control - On-Off & Volume
R12	N-6157	Control - Tone
R14	N-4022	Resistor - 33 Ohm - 1/2W. 20%
R10	N-4067	Resistor - 180 Ohm - 1/2W. 10%
R1	N-4025	Resistor - 22,000 Ohm - 1/2W. 20%
R9	N-4064	Resistor - 33,000 Ohm - 1/2W. 20%
R4	N-4063	Resistor - 47,000 Ohm - 1/2W. 20%
R2,R8	N-4026	Resistor - 220,000 Ohm - 1/2W. 20%
R11	N-4027	Resistor - 470,000 Ohm - 1/2W. 20%
R3,R6	N-1262	Resistor - 1.0 Megohm - 1/2W. 20%
R7	N-4028	Resistor - 6.8 Megohm - 1/2W. 20%
R13	N-5358	Resistor - 1,000 Ohm - 1.0W. 10%
T1	N-7676	Transformer - I.F. #1
T2	N-7677	Transformer - I.F. #2
T3	N-4875	Transformer - Output
	N-6149	Coil - Antenna
	N-7139	Coil - Oscillator

RECORD CHANGER: Gen. Instr. Model 700F, See pages RCD.CH.19-1,2 through RCD.CH.19-9.

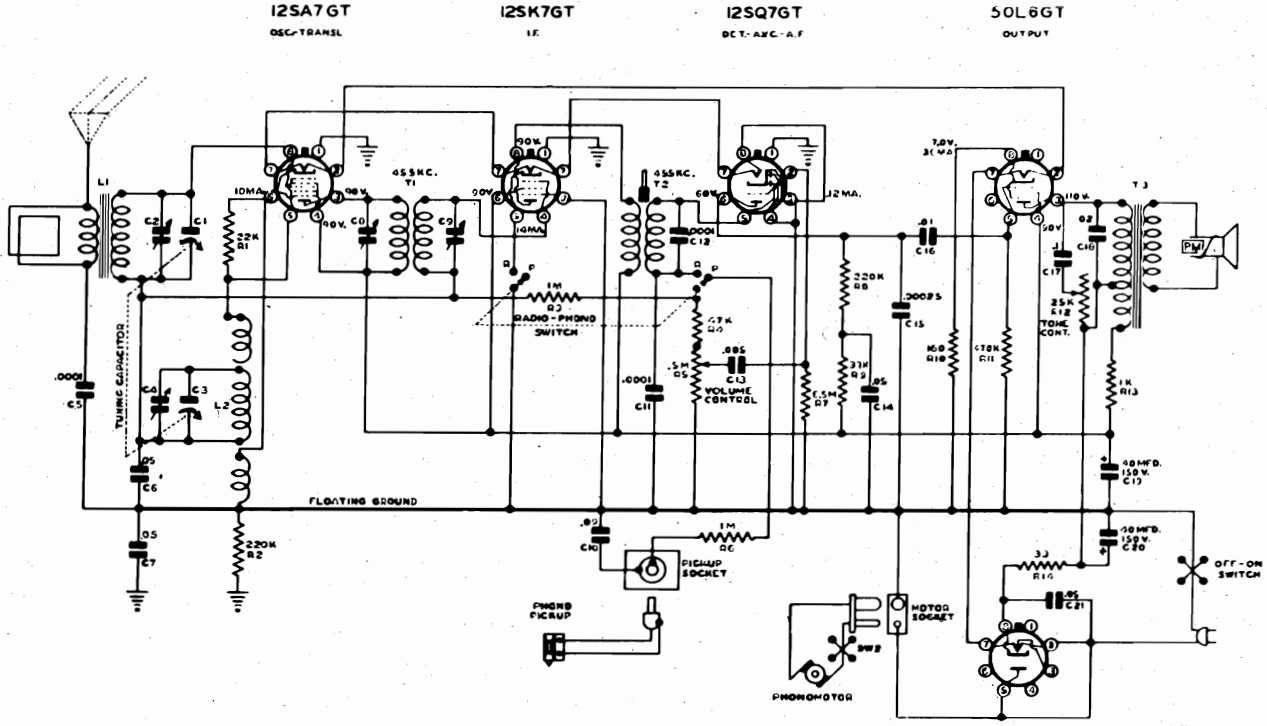

©John F. Rider

Compliments of www.nucow.com

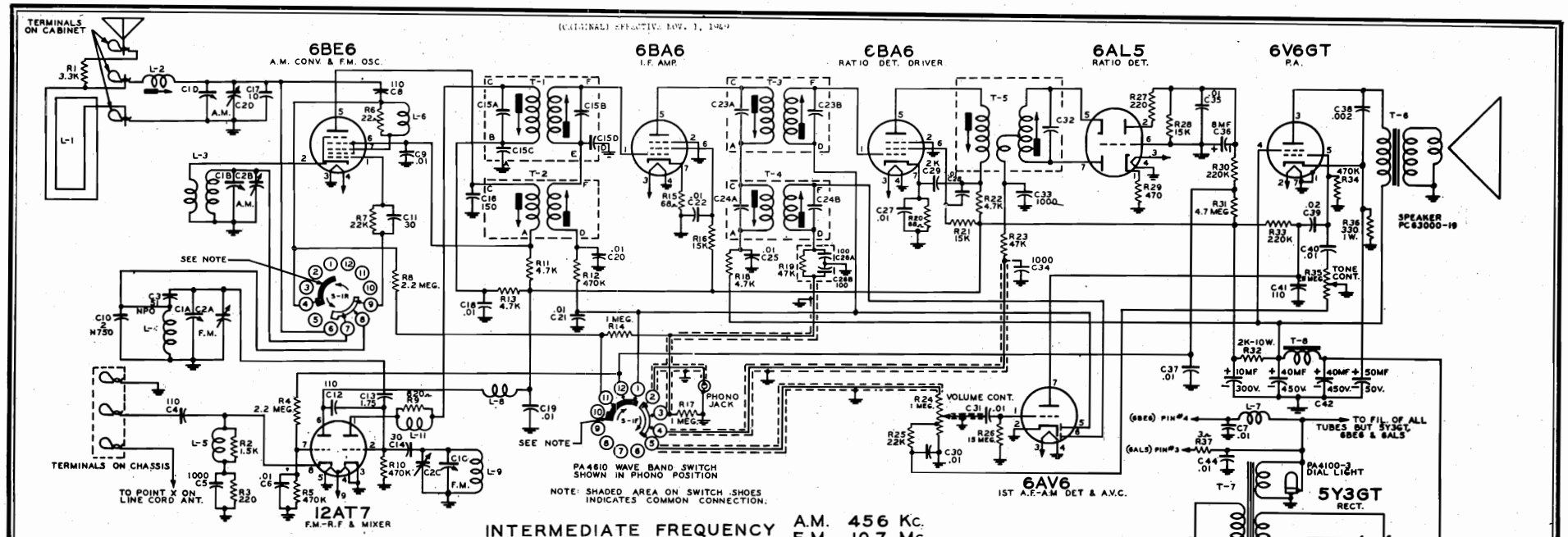

INTERMEDIATE FREQUENCY

A.M. 456 Kc.
F.M. 10.7 Mc

C1A,C1C F.M. GANG CONDENSER		PC65002-1
C1B,C1D A.M. " "		
C2C TRIMMER ON F.M. GANG		
C2B,C2D " " A.M. "		
C2A F.M. OSC. TRIMMER		PA4366
C3 51 MMF. CERAMIC (NPO)	**	CC30A-510K
C4 110 " "		CC30H-111A
C5 1000 MMF. CERAMIC DISC.		HK35G-102
C6 .01 MFD. " "		PA4334-2
C7 .01 MFD. " "		PA4334-2
C8 110 MMF. CERAMIC		CC30H-111A
C9 .01 MFD. CERAMIC DISC.		PA4334-2
C10 2 MMF. CERAMIC (N750)	**	CC30H-020K
C11 30 MMF. CERAMIC		CC30H-300K
C12 110 MMF. CERAMIC		CC30H-111A
C13 1.75 MMF. BIFILAR WIRE CAPACITOR		PA4344
C14 30 MMF. CERAMIC		CC30H-300K
C15A,C (F.M. PRI.) C15B,D (F.M. SEC.) I.F. CAPACITORS	*	
C16 150 MMF. CERAMIC		CC30G-151F
C18 .01 MFD. CERAMIC DISC.		PA4334-2
C19 .01 MFD. 400V. TUBULAR		PC40HL-103
C20 .01 MFD. CERAMIC DISC.		PA4334-2
C21 .01 MFD. " "		PA4334-2
C22 .01 MFD. " "		PA4334-2
C23A (F.M. PRI.) C23B (F.M. SEC.) I.F. CAPACITORS	*	
C24A (A.M. PRI.) C24B (A.M. SEC.) " "	*	
C25 .01 MFD. CERAMIC DISC.		PA4334-2
C26A,B 100 MMF. C & R UNIT		PA4329-1
C27 .01 MFD. CERAMIC DISC.		PA4334-2
C28 .01 MFD. " "		PA4334-2
C29 .002 MFD. "		HK35E-202
C30 .01 MFD. " "		PA4334-2
C31 .01 MFD. " "		PA4334-2
C32 33 MMF. MICA CAPACITOR RATIO DET.	*	
C33 1000 MMF. CERAMIC		HK35G-102
C34 1000 MMF. "		HK35G-102
C35 .01 MFD. CERAMIC DISC.		PA4334-2
C36 8 MFD. 50V. ELECTROLYTIC		PA4303-7
C37 .01 MFD. CERAMIC DISC.		PA4334-2
C38 .002 MFD. 1000 V. TUBULAR		PC40GN-202
C39 .02 MFD. 400V. "		PC40HL-203
C40 .01 MFD. 400V. "		PC40HL-103
C41 110 MMF. CERAMIC		CC30H-111A
C42 10-40-40-50 MFD. ELECTROLYTIC		PA4307-4
C43 110 MMF. CERAMIC		CC30H-111A
C44 .01 MFD. CERAMIC DISC.		PA4334-2
R1 3.3 K OHMS	½ W.	BR12S-332
R2 1.5 K " (IN L-5)	2 W.	DR12S-152
R3 220 "	½ W.	BR12S-221
R4 2.2 MEG "	" "	BR12S-225
R5 470K "	" "	BR12S-474
R6 22 " (IN L-6)	" "	BR12S-220
R7 22K "	" "	BR12S-223
R8 2.2 MEG "	" "	BR12S-225
R9 820 " (IN L-11)	" "	BR12S-821
R10 470K "	" "	BR12S-474
R11 4.7K "	" "	BR12S-472
R12 470K "	" "	BR12S-474
R13 4.7K "	" "	BR12S-472
R14 1 MEG "	" "	BR12S-105
R15 68 "	" "	BR12S-680
R16 15K "	" "	BR12S-153
R17 1 MEG "	" "	BR12S-105
R18 4.7K "	" "	BR12S-472
R19 47K " C & R UNIT	" "	PA4329-1
R20 68 "	" "	BR12S-680
R21 15K "	" "	BR12S-153
R22 4.7K "	" "	BR12S-472
R23 47K "	" "	BR12S-473
R24 1 MEG " VOLUME CONTROL		PA4408-2
R25 22K "	½ W.	BR12S-223
R26 15 MEG "	" "	BR12S-156
R27 220 "	" "	BR12S-221
R28 15K "	" "	BR12S-153
R29 470 "	" "	BR12S-471
R30 220K "	" "	BR12S-224
R31 4.7 MEG "	" "	BR12S-475
R32 2K " WIRE WOUND	10 W.	PA4200-10
R33 220K "	½ W.	BR12S-224
R34 470K "	" "	BR12S-474
R35 5 MEG " TONE CONTROL		PA4400-10
R36 330 "	1 W.	CR12S-331
R37 3 " WIRE WOUND	½ W.	PA4207-1
L1 LOOP ANTENNA		PA5250-4
L2 LOOP LOADING COIL		AA6616-1
L3 B.C. OSC. COIL		AA6665-3
L4 F.M. OSC. COIL		PA5200-7
L5 100 MC. CHOKE COIL (1500Ω FORM)		AA6798-3
L6 " " (22Ω ")		AA6798-5
L7 CHOKE COIL (FILAMENT)		AA6798-6
L8 CHOKE COIL		AA6769-2
L9 F.M.-R.F COIL		PA5200-6
L10 LINE CORD ANT. CHOKE		AA6664-1
L11 CHOKE COIL		AA6798-7
T1 NO. 1 F.M.-I.F. TRANS.		AA6667-1
T2 NO. 1 A.M.-I.F. TRANS.		AA6668-5
T3 NO. 2 F.M.-I.F. TRANS.		AA6667-3
T4 NO. 2 A.M.-I.F. TRANS.		AA6668-1
T5 RATIO DETECTOR		AA6684-1
T6 OUTPUT TRANS.		AB44061-2
T7 POWER TRANS.		AB44013-1
T8 FILTER CHOKE		AB47004-1

** REPLACE ONLY WITH TEMPERATURE COEFFICIENT AS INDICATED.

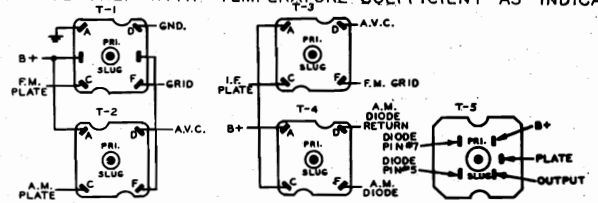

BOTTOM VIEW, TERMINAL HOOKUP FOR T-1, T-2, T-3, T-4 & T-5

* SPECIAL SERVICE NOTE: THESE TRANSFORMERS SUPPLIED IN COMPLETE ASSEMBLIES ONLY.

©John F. Rider
Compliments of www.nucow.com

MODELS 141A, Ch. 8L10; 4970, 4971, 4972, Ch. 8S10

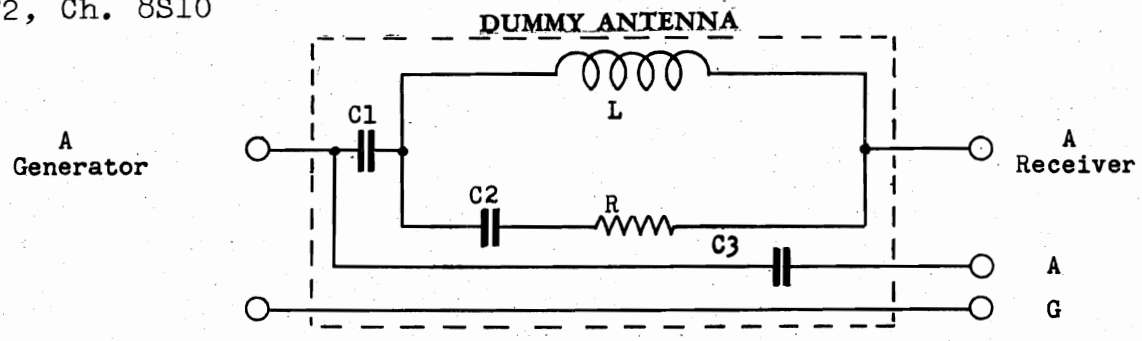

C1 - 200 mmf. Condenser 400 V.D.C.
C2 - 400 mmf. Condenser 400 V.D.C.
C3 - .02 mmf. Condenser 400 V.D.C.
R - 100 ohms Resistor 1/4 Watt
L - Choke Coil

----Case Shield
Choke Coil Specification
Tubing - 3/8" diameter Bakelite
Wire - No. 38 Enameled
Turns - 59 Closely Wound (Impregnated)

NOTE: When using this dummy antenna the generator output impedance should be 10 ohms or lower.

CHASSIS TYPE 8L10

MODEL 141A

CHASSIS DIAGRAM

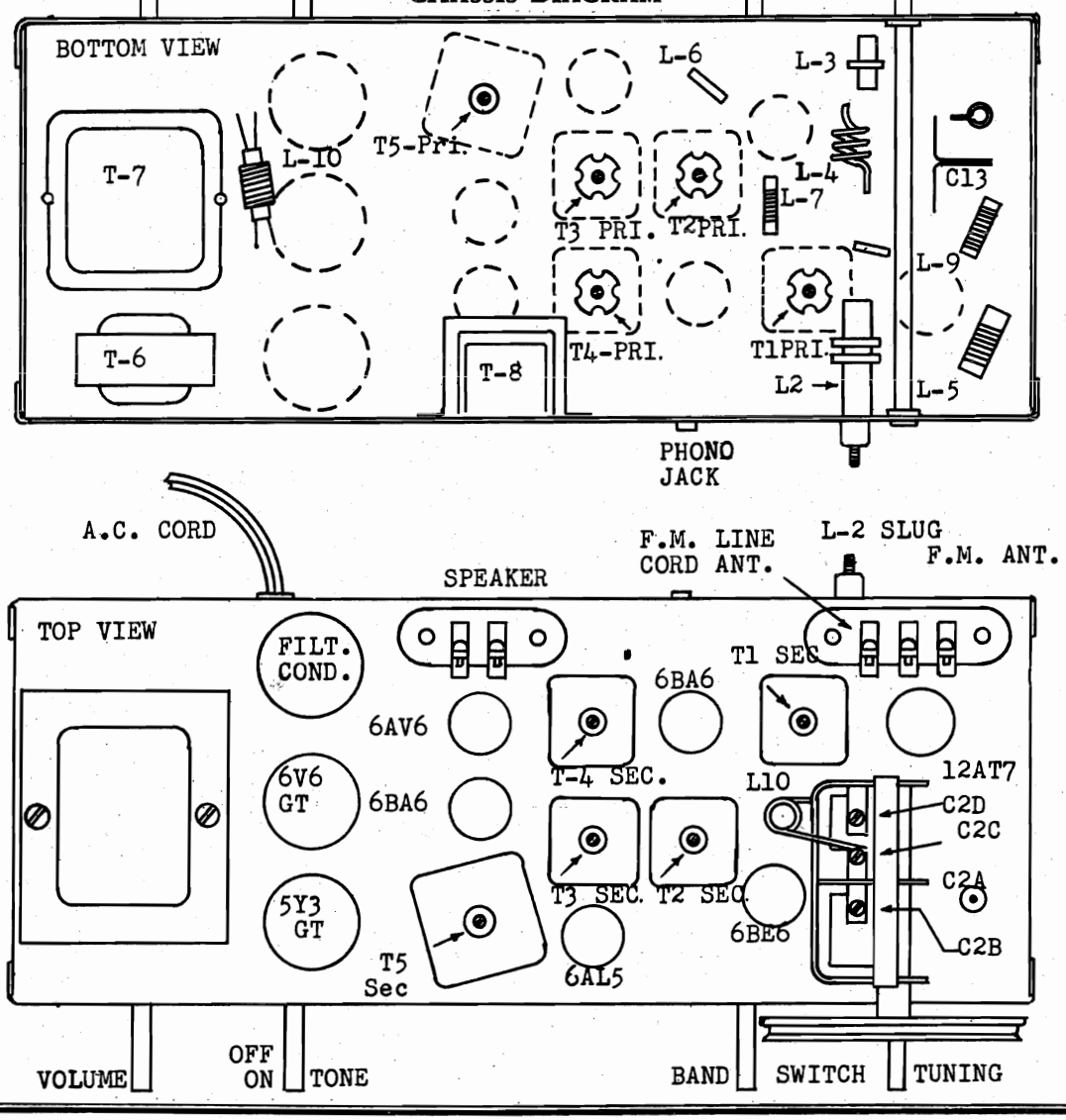

©John F. Rider

Compliments of www.nucow.com

STEP BY STEP ALIGNMENT PROCEDURE

OPER-ATION	ALIGNMENT OF	GENERATOR CONNECTED TO	DUMMY ANT.	GENERATOR FREQUENCY	BAND SWITCH SETTING	TUNING COND SETTING	TRIMMER OR SLUG	REMARKS
1.	Set dial pointer even with left-hand stop line with condenser gang closed.							
2.	Connect output meter across speaker terminals.							
3.	A.M.-I.F.	Pin #7 of 6BE6 Conv. Tube	.02 MFD. Cond.	456 KC.	A.M.	Open	T4 Sec. Slug	Max. Reading
							T4 Pri. Slug	Max. Reading
							T2 Sec. Slug	Max. Reading
							T2 Pri. Slug	Max. Reading
4.	Repeat operation #3.							
5.	A.M.-R.F.	A.M. Ant. On Cabinet	*	1500 KC.	A.M.	1500 KC.	C2B Osc. Tri.	Peak Accurately
6.				1500 KC.		1500 KC.	C2D Ant. Tri.	Peak Accurately
7.	A.M.-R.F.	On Cabinet	*	600 KC.	A.M.	600 KC.	L-2 Slug	Max. Reading
8.	Repeat operations #5, #6 and #7.							
9.	Check Calibrations at 600,1000 and 1500 KC.							
10.	SPECIAL NOTE: For complete F.M.-I.F. Visual Alignment instructions please refer to pages 7, 8,9,10,11 and 12 of this bulletin.							
11.	F.M.-I.F. Alignment using an A.M. Generator and Output Meter.							
12.	T5 F.M. Ratio Det.	Pin #1 of 2nd 6BA6 Tube	.02 MFD. Cond.	10.7 MC.	F.M.	Open	T5 Sec. Slug	Max. Reading
							T5 Pri. Slug	Max. Reading
13.	NOTE: Operations 11, 13, 14, 15, 18 and 19 must be made with generator output as low as possible, consitent with usable output meter reading.							
14.	T3 2nd. F.M.-I.F.	Pin #1 1st 6BA6 Tube	.02 MFD. COND.	10.7 MC.	F.M.	Open	T3 Sec. Slug	Max. Reading
							T3 Pri. Slug	Max. Reading
15.	T1 1st F.M.-I.F.	Pin #8 on 12AT7 Mixer Tube	.02 MFD. Cond.	10.7 MC.	F.M.	Open	T1 Sec. Slug	Max. Reading
							T1 Pri. Slug	Max. Reading
16.	Adjust secondary slug on T5 ratio detector transformer to minimum deflection or dip on output meter. Under certain conditions it is possible to adjust T5 sec. slug to minimum noise with the receiver tuned to a weak station. This operation is very critical and the receiver must be tuned to the center response only.							
17.	F.M.-R.F. alignment using an A.M. generator with frequencies of 88 to 108 MC. and a vacuum tube voltmeter, or D.C. voltmeter. (20,000 Ohms per volt.)							
18.	Place meter across C36 elect. condenser. (Meter reading approximately 1 volt.)							
19.	F.M.-R.F.	F.M. Ant.	Match Gen. To 300 Ohm	106 MC.	F.M.	106 MC.	C2A Osc. Tri.	Max. Reading
							C2C Ant. Tri.	Peak Accurately
20.	Check Calibration at 88 MC.							

©John F. Rider

Compliments of www.nucow.com

MODELS 141A, Ch. 8L10;
4970, 4971, 4972, Ch. 8S10

VISUAL I. F.-F. M. ALIGNMENT DATA

WARNING: Do not proceed with any of the following alignment instructions unless it is certain that the AM-IF is in accurate alignment. If not, align the AM-IF system according to the step by step alignment procedure.

1. **DESCRIPTION OF CIRCUIT USED:**

A 6AL5 is employed as a ratio detector. This tube is preceeded by a 6BA6 ratio detector driver and a stage of amplification at 10.7 Mc. also utilizing a 6BA6 tube. The 2nd section of the 12AT7 tube is used as the FM mixer. All IF coupling uses individual slug tuned transformers.

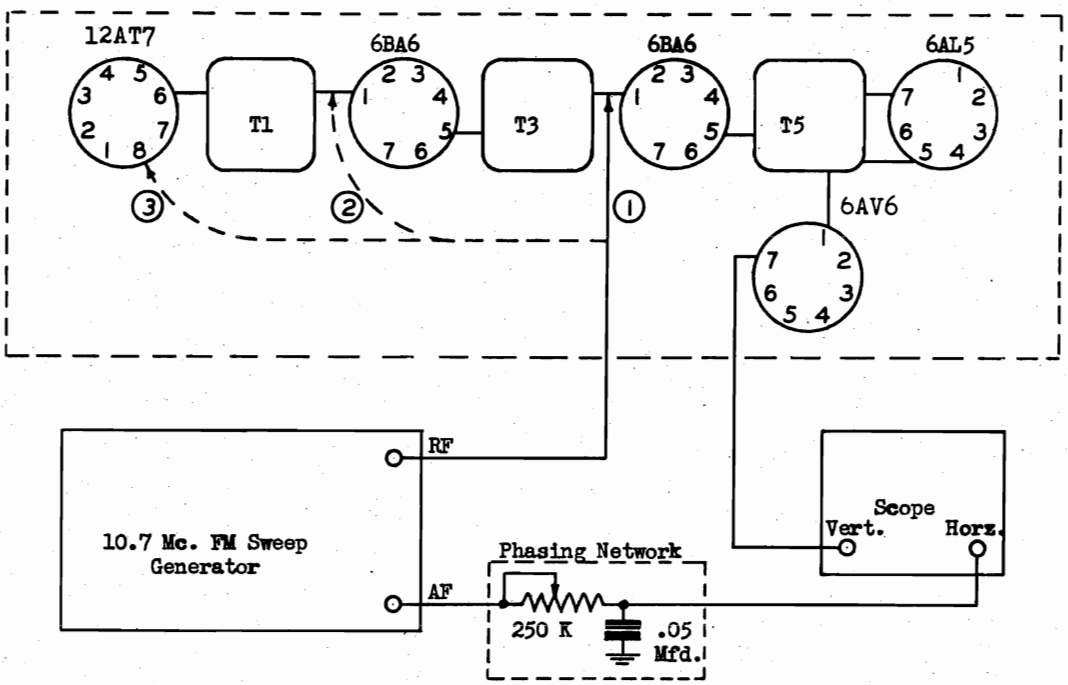

Gen. & Scope Position	Adjust
1	T-5
2	T-3
3	T-1

2. **THEORY OF VISUAL ALIGNMENT.**

One of the characteristics of a tuned circuit is the fact that when it is excited or driven by a generator such as a vacuum tube or another tuned circuit, the voltage developed across it will vary with slight changes in frequency. This voltage will be greatest when the frequency is equal to the resonant frequency of the circuit and will be less if the frequency is higher or lower than the resonant frequency.

Thus if we were to shift the frequency from high to low or low to high across the resonant frequency and make a record of the voltage across the tuned circuit, we could plot the voltage against frequency and obtain a curve which might look like Fig. 1.

Fig. 1

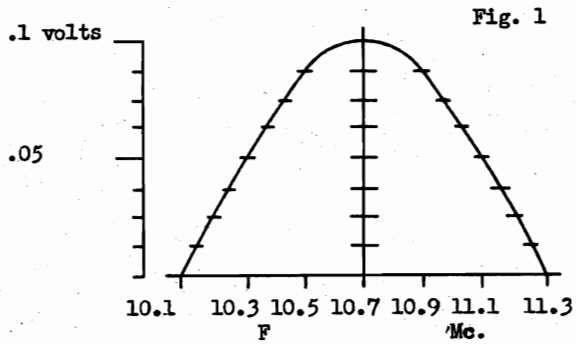

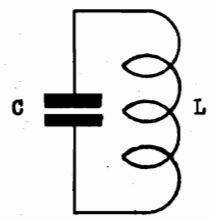

©John F. Rider

Compliments of www.nucow.com

MODELS 141A, Ch. 8L10;
4970, 4971, 4972, Ch. 8S10

VISUAL I. F.-F. M. ALIGNMENT DATA

This is the selectivity curve or response curve for the circuit under discussion. This type of circuit may be aligned or adjusted to resonance by simply changing either L or C until maximum voltage is obtained at the resonant frequency. Now if another circuit tuned to the same resonant frequency is coupled to the simple case above, a number of things can happen. First current flowing in one circuit will induce current in the second circuit, the magnitude of this current depending on the degree or amount of coupling between the two circuits. This coupling may be in the form of mutual inductance, mutual capacitance or any impedance common to the two circuits. Now if we repeat the proceedure outlined for obtaining the response curve of a single tuned circuit using the voltage developed across the secondary of the coupled circuit while driving the primary, we may get either of two types of curves depending on the magnitude of the coupling, (a) in Fig. 2 is a typical curve for two circuits coupled below critical coupling and (b) is a representation of the curve for an over coupled circuit.

Fig. 2

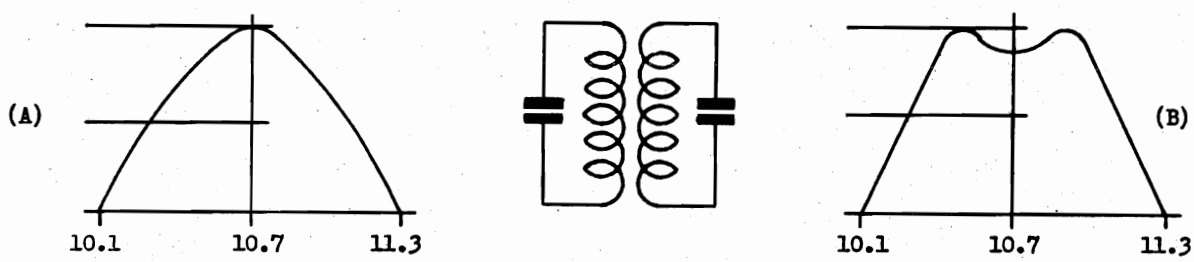

Overcoupled circuits producing a response curve like (b) Fig. 2 are often employed where it is important that the response curve remain approximately flat over a narrow band of frequencies near the resonant frequency. They are also frequently combined with single peaked circuits to produce a response curve like Fig. 3.

Fig. 3

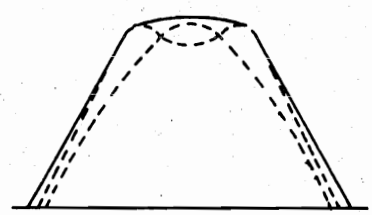

The dotted lines indicate the curves of the individual circuits and the solid curve shows the overall response of the two or more pairs of coupled circuits. Circuits like the above or approaching them in form are desirable in an FM receiver where the pass band should be of the order of 200 Kc. Now from the above it is evident that simple peaking both sides of a circuit coupled below critical for maximum voltage will provide optimum alignment but if this proceedure is followed with an overcoupled circuit it is almost a certainty that the two circuits will not be tuned to the resonant frequency but will instead be aligned so that either one or the other is accentuated. The response curve will then look like Fig. 4 (a) or (b).

Fig. 4

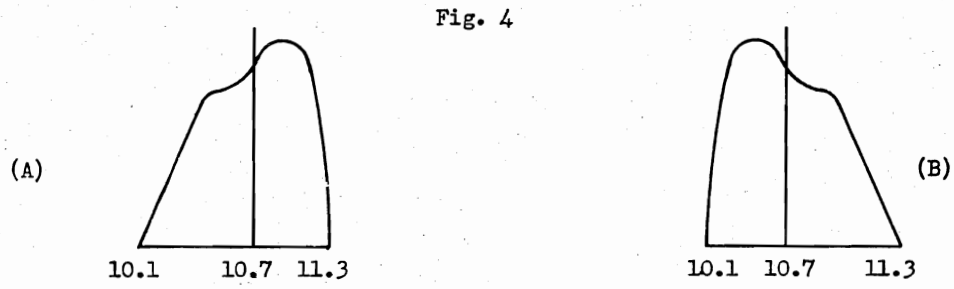

©John F. Rider

Compliments of www.nucow.com

MODELS 141A, Ch. 8L10;
4970, 4971, 4972, Ch. 8S10

VISUAL I. F.-F. M. ALIGNMENT DATA

Now if this overcoupled circuit is combined with a single peaked circuit (where the coupling is below critical), the misalignment becomes worse, something like Fig. 5.

Fig. 5

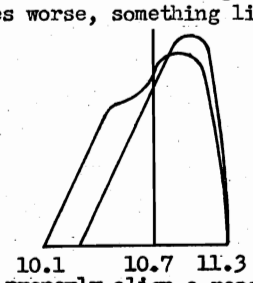

From the above it appears that to properly align a receiver using overcoupled IF transformers it will be necessary to take a response curve of each stage and align the circuit so that the two peaks are symmetrical, that is, approximately equal in amplitude and displaced equally from the center frequency. To do this with a CW or AM signal would be laborious and time consuming whereas the use of visual equipment makes it nearly as simple as adjusting a simple single peaked amplifier.

Visual alignment test equipment performs the operation of plotting the response curve almost exactly as described above except that instead of manually changing the generator frequency, recording the voltage and then plotting the results, these operations are performed automatically and simultaneously by a combination of electronic circuits. The operation is briefly as follows.

In the signal generator a low AC voltage is applied to a reactance tube modulator which shifts the oscillator frequency from low to high or from high to low at a rate determined by the frequency of the AC voltage and by an amount determined by the AC voltage. The frequency at any instant is dependant on the AC voltage present at that instant of time. An oscilloscope is provided which may be considered a voltmeter used to read the voltage across the tuned circuit, provided a detector is used to convert the RF to a low audio frequency. This voltage is then applied to the vertical plates and results in a vertical displacement of the spot on the screen. Some of the voltage used to shift the oscillator frequency is also applied to the horizontal plates of the oscilloscope providing a means of displacing the spot horizontally. It is now evident that since for any given AC voltage only one frequency may be obtained and since that AC voltage will result in an exact amount of spot deflection on the scope we can read the voltage across the circuit under examination by noticing the position of the spot at this exact instant.

Now if we consider the frequency as shifting from low to high 60 times per second and remember that the spot is moving across the screen of the scope 60 times per second at exact synchronisation with the change in frequency it is only necessary to apply the voltage from our circuit to the vertical plates to obtain a replica of the response curve on the face of the cathode ray tube. This curve will be repeated 60 times per second if our sweep frequency is 60 cycles. Adjustments to the circuit may now be made and the effect on the response curve noted instantaneously.

Although it is possible to observe the selectivity curves as shown in Fig. 1, 2, and 3 on the scope by the use of an auxiliary special detector coupled to the plate of the last IF tube, it is much more convenient to observe the effects of IF alignment upon the shape of the ratio detector output trace. When this is done the auxiliary detector is not necessary and a direct connection of the scope into the receiver circuits will provide all the necessary connections.

If the overall selectivity curve is not "flat-topped" (solid line in Fig. 3) the ratio detector curve cannot be linear (straight) throughout the center section, symmetrical and have sufficient band width (Fig. 6).

Under these conditions it would not be possible to receive a signal without distortion and higher than normal noise, the degree of distortion and abnormal noise dependent upon the extent to which the center of the ratio detector trace departs from a straight line and the extent to which the entire trace departs from true symmetry.

After a pattern similar to Fig. 6 is obtained with connection #1 shown in the block diagram, the generator lead may be moved ahead through the IF system one tube at a time and the intervening transformer aligned for maximum output but at all times a curve very similar to Fig. 6 must be maintained.

3. **EQUIPMENT REQUIRED.**

(a) A sweep signal generator with a center frequency of 10.7 Mc. and a total sweep width of at least 400 Kc. Examination of the block diagram will reveal a variable resistor-capacitor circuit inserted in the lead between the FM sweep generator and the horizontal amplifier of the oscilloscope. This control should be adjusted so that the dual trace observed on the oscilloscope will blend into a single trace and thereby eliminate any confusion due to the two traces.

(b) An Oscilloscope with either a 3" or 5" tube equipped with both vertical and horizontal amplifiers.

©John F. Rider

Compliments of www.nucow.com

MODELS 141A, Ch. 8L10;
4970, 4971, 4972, Ch. 8S10

VISUAL I. F.-F. M. ALIGNMENT DATA

4. ALIGNMENT OF THE 10.7 I.F.

Turn the wave band switch to F.M. and the generator to 10.7 Mc. Connect the F.M. signal generator output lead to the grid of the ratio detector driver tube and the scope to the 1st audio plate. Now proceed to align the ratio detector transformer for maximum linearity and output, being careful to maintain as symmetrical a trace as possible. Note that the adjustment of the secondary circuit, controls to a large extent, the linearity and symmetry of the pattern, and adjustment of the primary will influence the gain of the circuit. Fig. 6 represents a linear detector curve properly aligned.

It is important that the generator sweep a sufficiently wide band of frequencies so that the curves on both ends of the straight portion can be seen. Maximum linearity of alignment will result when these curves are symmetrically shaped and as previously stated this will result in minimum distortion and noise.

Fig. 6

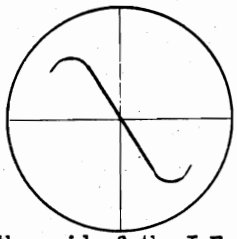

Connect the generator output lead to the grid of the I.F. amplifier. Align primary and secondary of the I.F. transformer being careful to maintain the same basic ratio detector trace as just described.

Observe that by alternately adjusting the primary and secondary, the vertical amplitude can be increased without the response curve becoming distorted. At all times it is important to reduce the signal generator output to maintain the scope picture on the screen. This will avoid overload and possible misalignment therefrom.

Move the generator lead to the grid of the converter tube and align No. 1 I.F. transformer following the same proceedure as above.

Fig. 7, (A), (B), (C), and (D) represent typical selectivity curves of an overall I.F. Amplifier. Fig. 7, (AA), (BB), (CC), and (DD) represent the corresponding ratio detector curves.

Fig. 7

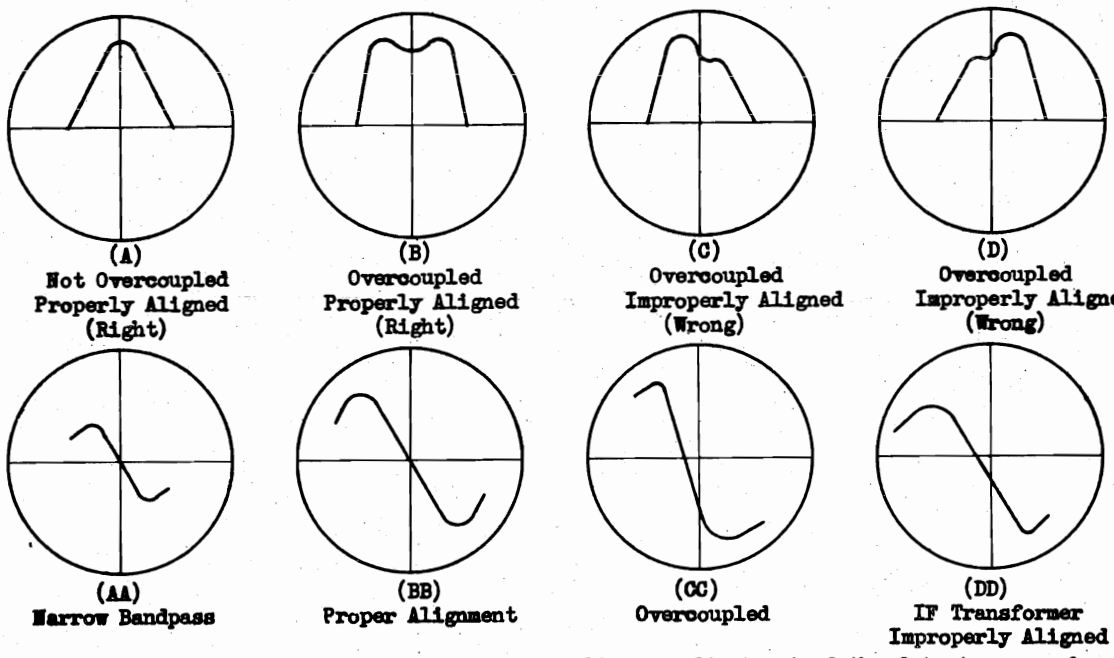

Should the trace appear unsatisfactory, a very slight readjustment of the detector secondary alignment may be made at this time as the need for any but a slight correction is an indication of incorrect alignment in one of the other stages. This is permissible only if the degree of correction necessary is slight. If this is not the case the entire alignment procedure should be repeated.

©John F. Rider

Compliments of www.nucow.com

MODELS 141A, Ch. 8L10;
4970, 4971, 4972, Ch. 8S10

WHEN ORDERING PARTS ALWAYS SPECIFY PART NUMBER AND MODEL FOR WHICH PART IS INTENDED.

DESCRIPTION		PART NUMBER
COILS		
L-1	Loop Ant. Assembly	PA5250-4
L-2	Loop Loading Coil	AA6616-1
L-3	A.M. Osc. Coil	AA6665-3
L-4	F.M. Osc. Coil	PA5200-7
L-5	100 Mc. Choke Coil	AA6798-3
L-6	Choke Coil	AA6798-5
L-7	Choke Coil	AA6798-6
L-8	Choke Coil	AA6769-2
L-9	F.M.-R.F. Coil	PA5200-6
L-10	Line Cord Ant. Choke	AA6664-1
L-11	Choke Coil	AA6798-7

CONDENSERS & MISCELLANEOUS	
Condenser - 2 Gang Variable	PC65002-1
Condenser - (C42) 10-40-40-50 Mfd. Electrolytic	PA4307-4
Condenser - (C36) 8 Mfd. 50 Volt Electro.	PA4303-7
C & R Unit - (C26A & B with R19)	PA4329-1
Control - (R24) 1 Megohm Volume	PA4408-2
Control - (R35) .5 Megohm Tone & A.C. Switch	PA4400-10
Control - Panel	PC63071
Dial Chart	PB30013
Dial Light Bulb	PA4100-3
Knobs - (4-Black)	PA5625-1
Switch - Wave Band	PA4610
*Speaker - (6" x 9" Oval)	PC63000-19

TRANSFORMERS

T1 - Transformer - No. 1 F.M. - I.F. Assembly	AA6667-1
T2 - Transformer - No. 1 A.M. - I.F. Assembly	AA6668-5
T3 - Transformer - No. 2 F.M. - I.F. Assembly	AA6667-3
T4 - Transformer - No. 2 A.M. - I.F. Assembly	AA6668-1
T5 - Transformer - Ratio Detector Assembly	AA6684-1
T6 - Transformer - Output	AB44061-2
T7 - Transformer - Power	AB44013-1
T8 - Choke - Filter	AB47004-1

* Complete speakers may be returned to factory Service Department for repair or replacement.

DIAL STRINGING

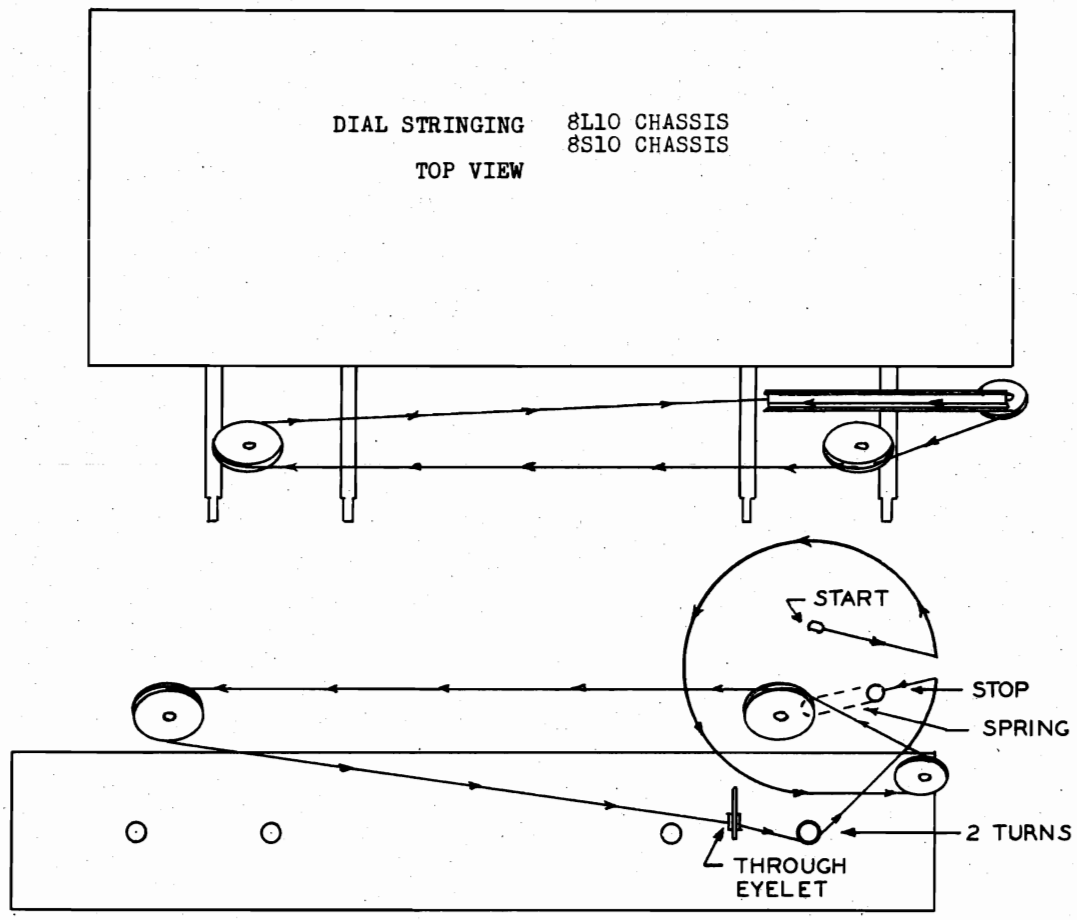

©John F. Rider

Compliments of www.nucow.com

MODELS 141A, Ch. 8L10;
4970, 4971, 4972, Ch. 8S10

VOLTAGE CHART

Line Voltage: 117 Volts AC

Postion of volume control: Full with set tuned to quiet channel. Position of Band Switch A.M.

TUBE	FUNCTION	Voltage of Sockets Prongs to Ground See Prong Nos. on Schematic.								
		No. 1	No. 2	No. 3	No. 4	No. 5	No. 6	No. 7	No. 8	No. 9
6BE6	A.M. Conv. & F.M. Osc.	-2.5	0	0	6.3*	100	100	**		
12AT7	F.M. - R.F. & Mixer	115	-.6	0	0	0	145	-1	1.6	6.3
6BA6	I.F. Amp.	-.1	0	6.3*	0	190	100	1.0		
6BA6	Ratio Det. Driver	-.5	0	6.3*	0	110	100	.85		
6AL5	Ratio Det.	0	-.25	5.6*	0	0	0	0		
6AV6	1st A.F.-A.M. Det. & A.V.C.	-.1	0	6.3*	0	-.1	-.1	75		
6V6GT	Power Amplifier	0	0	220	230	0	145	6.3*	12	
5Y3GT	Rectifier	0	270		260*		260*		270	

NOTES: Voltage readings are for schematic diagram in this bulletin. Allow 15% + or - on all measurements. Alsways use meter scale which will give greatest deflection within scale limits. All D.C. measurements made with 20,000 ohms per volt voltmeter. All AC voltages made with rectifier type voltmeter.

* AC Volts.

** Cannot be measured with 20,000 ohms per volt voltmeter.

CHASSIS TYPE 8S10

MODELS 4970, 4971 & 4972

CHASSIS DIAGRAM

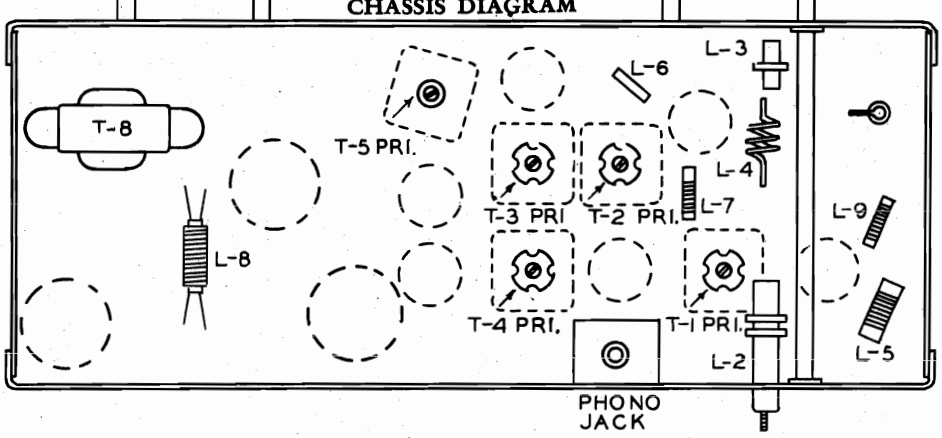

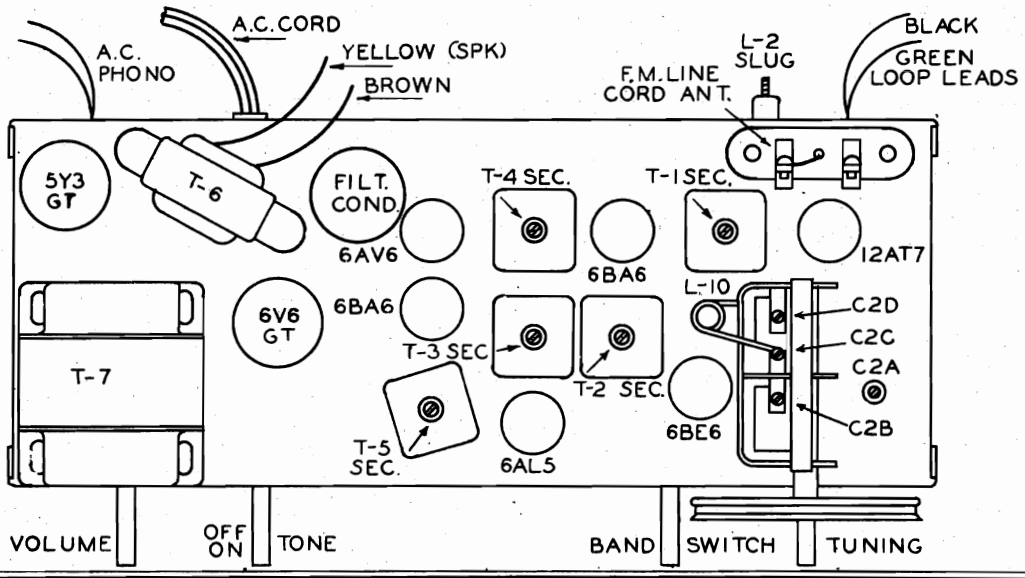

© John F. Rider

Compliments of www.nucow.com

MODELS 4970, 4971, 4972, Ch. 8S10

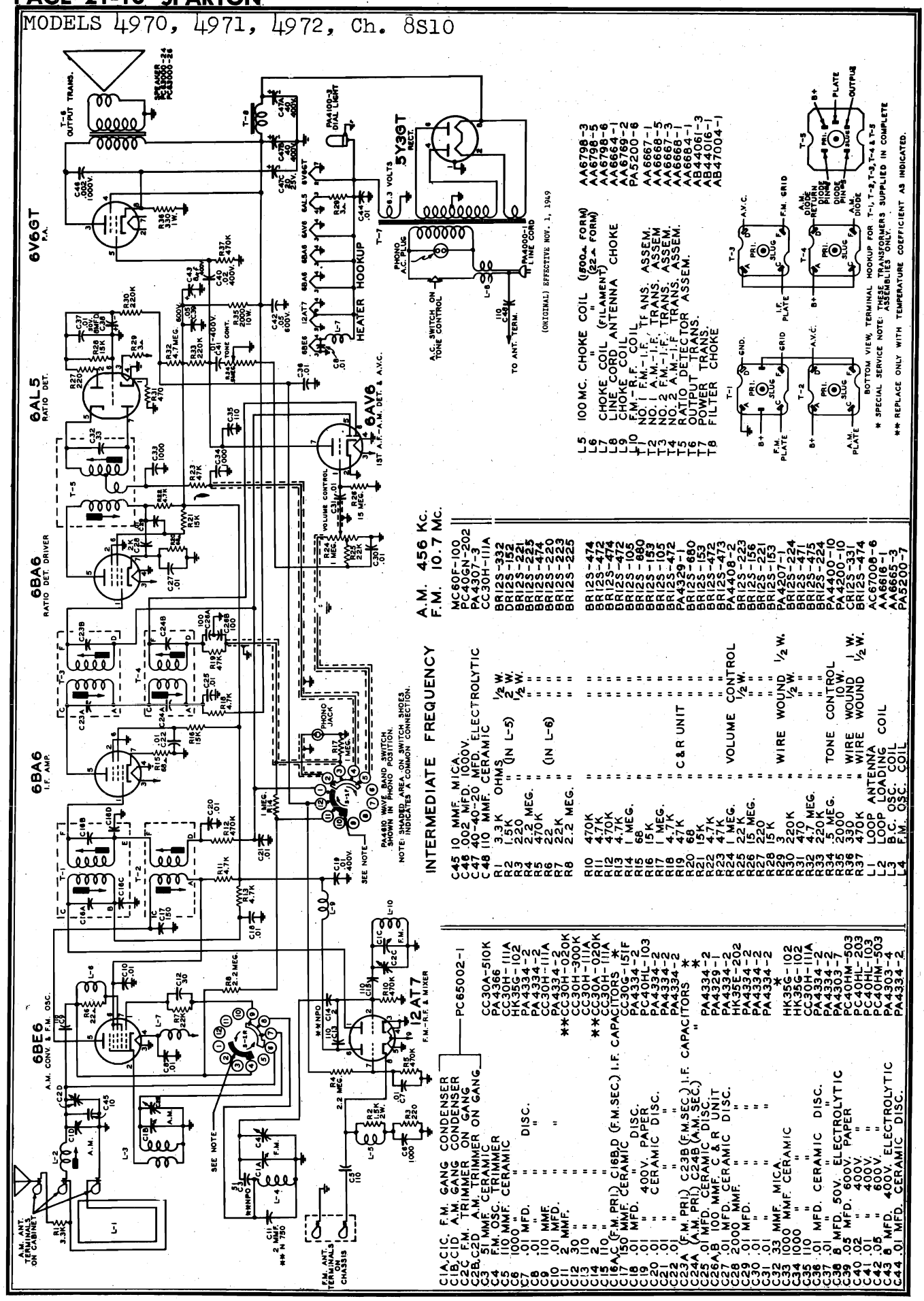

©John F. Rider

Compliments of www.nucow.com

MODELS 141X, 142X, 1040X, 1041X, Ch. 8M10

MODEL 141X 142X

MODEL 1040X 1041X

VOLTAGE CHART

Line Voltage: 117 Volts AC

Position of volume control: Full with set tuned to quiet channel. Position of band switch A.M.

TUBE	FUNCTION	Voltage of Sockets Prongs to Ground See Prong Nos.on Schematic.								
		No.1	No. 2	No. 3	No. 4	No. 5	No.6	No.7	No. 8	No. 9
6BE6	A.M. Conv. & F.M. Osc.	-2.5	0	0	6.3*	90	80	**		
12AT7X	F.M. -R.F. & Mixer	135	-.6	0	0	0	150	-1	1.2	6.3*
6BA6	I. F. Amp.	-.1	0	6.3*	0	235	100	1.0		
6BA6X	Ratio Det. Driver	-.5	0	6.3*	0	95	90	1.2		
6AL5	Ratio Det.	0	-.25	5.6*	0	0	0	0		
6AV6	1st A.F.-A.M. Det.& A.V.C.	-.1	0	6.3*	0	-.1	-.1	95		
6V6GT	Power Amplifier	0	0	250	260	0	240	6.3*	14	
5Y3GT	Rectifier	0	270		260*		260*		270	

NOTES: Voltage readings are for schematic diagram in this bulletin. Allow 15% + or - on all measurements. Always use meter scale which will give greater deflection within scale limits. All D. C. measurements made with 20,000 ohms per volt voltmeter. All AC voltages made with rectifier type voltmeter.

* AC Volts
** Cannot be measured with 20,000 ohms per volt voltmeter.
X Band switch on F.M.

DUMMY ANTENNA

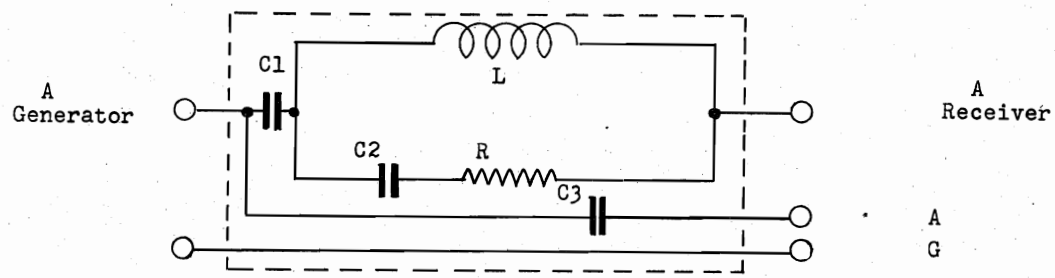

C1 - 200 mmf. Condenser 400 V.D. C.
C2 - 400 mmf. Condenser 400 V.D.C.
C3 - .02 mmf. Condenser 400 V.D.C.
R - 100 ohms Resistor 1/4 Watt
L - Choke Coil

----Case Shield
Choke Coil Specification
Tubing - 3/8" diameter Bakelite
Wire- No. 38 Enameled
Turns- 59 Closely Wound (Impregnated)

NOTE: When using this dummy antenna the generator output impedance should be 10 ohms or lower.

©John F. Rider

Compliments of www.nucow.com

MODELS 141X, 142X,
1040X, 1041X, Ch. 8M10

OPER-ATION	ALIGNMENT OF	GENERATOR CONNECTED TO	DUMMY ANT.	GENERATOR FREQUENCY	BAND SWITCH SETTING	TUNING COND SETTING	TRIMMER OR SLUG	REMARKS
1.	Set Dial pointer even with left-hand stop line with condenser gang closed.							
2.	Connect output meter across speaker terminals.							
3.	A.M.-I.F.	Pin #7 of 6BE6 Conv. Tube	.02 MFD Cond.	456 KC.	A.M.	Open	T4 Sec. Slug	Max. Reading
							T4 Pri. Slug	Max. Reading
							T2 Sec.Slug	Max. Reading
							T2 Pri. Slug	Max. Reading
4.	Repeat operation #3.							
5.	A.M.-R.F.	A.M. Ant. On Cabinet	*	1500 KC.	A.M.	1500 KC.	C2B Osc. Tri.	Peak Accurately
6.				1500 KC.		1500 KC.	C17 Ant.Tri.	Peak Accurately
7.	A.M.-R.F.	On Cabinet	*	600 KC.	A.M.	600 KC.	L-2 Slug	Max.Reading
8.	Repeat operations #5,#6 and #7.							
9.	Check Calibrations at 600,1000 and 1500 KC.							
10.	SPECIAL NOTE: For complete F.M.- I.F. Visual Alignment instructions please refer to pages 9.10.11.12.13 and 14 of Bulletin 11,Manual 6.							
11.	F.M.-I.F. Alignment using an A.M. Generator and Output Meter.							
12.	T5 F.M. Ratio Det.	Pin #1 of 2nd 6BA6 Tube	.02 MFD. Cond.	10.7 MC.	F.M.	Open	T5 Sec. Slug	Max.Reading
							T5 Pri. Slug	Max.Reading
13.	NOTE: Operations 11.12.14.15.18 and 19 must be made with generator output as low as possible,consistent with usable output meter reading.							
14.	T3 2nd. F.M.-I.F.	Pin #1 1st 6BA6 Tube	.02 MFD. COND.	10.7 MC.	F.M.	Open	T3 Sec. Slug	Max.Reading
							T3 Pri. Slug	Max.Reading
15.	T1 1st F.M.-I.F.	Pin #8 on 12AT7 Mixer Tube	.02 MFD. COND.	10.7 MC.	F.M.	Open	T1 Sec. Slug	Max.Reading
							T1 Pri. Slug	Max.Reading
16.	Adjust secondary slug on T5 ratio detector transformer to minimum deflection or dip on output meter. Under certain conditions it is possible to adjust T5 sec.slug to minimum noise with the receiver tuned to a weak station. This operation is very critical and the receiver must be tuned to the center response only.							
17.	F.M-R.F. alignment using an A.M. Generator with frequencies of 88 to 108 MC.and a vacuum tube voltmeter or D. C. voltmeter. (20,000 Ohms per volt).							
18.	Place meter across C36 elect. condenser. (Meter reading approximately 1 volt)							
19.	F.M.-R.F.	F.M. Ant.	Match Gen. To 300 Ohms	106 MC	F.M.	106 MC.	C2A Osc. Tri.	Max.Reading
							C2C Ant. Tri.	Peak Accurately
20.	Check Calibration at 88 MC.							

*Use standard dummy antenna as described

CHASSIS DIAGRAM

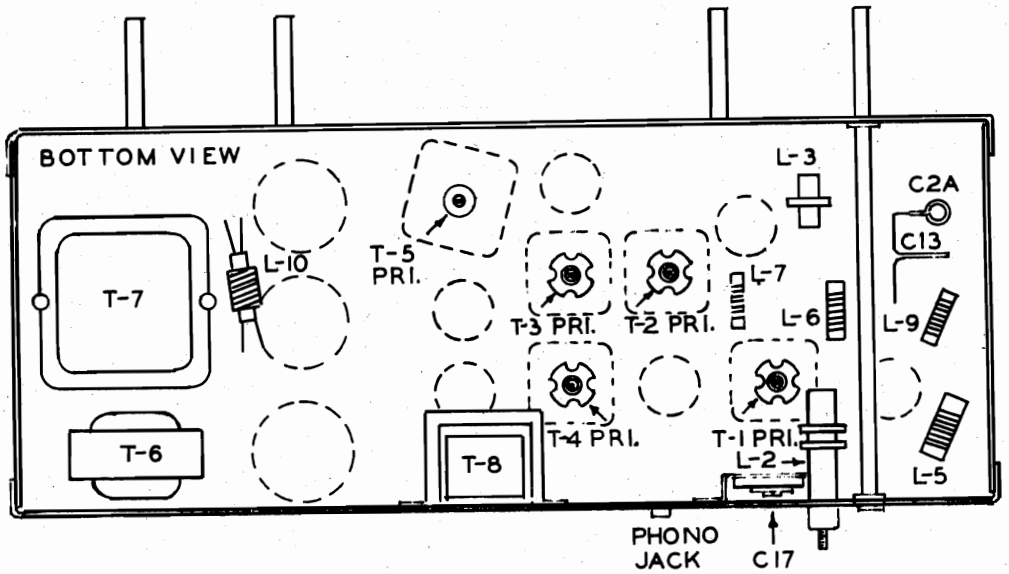

©John F. Rider

Compliments of www.nucow.com

MODELS 141X, 142X, 1040X, 1041X, Ch. 8M10

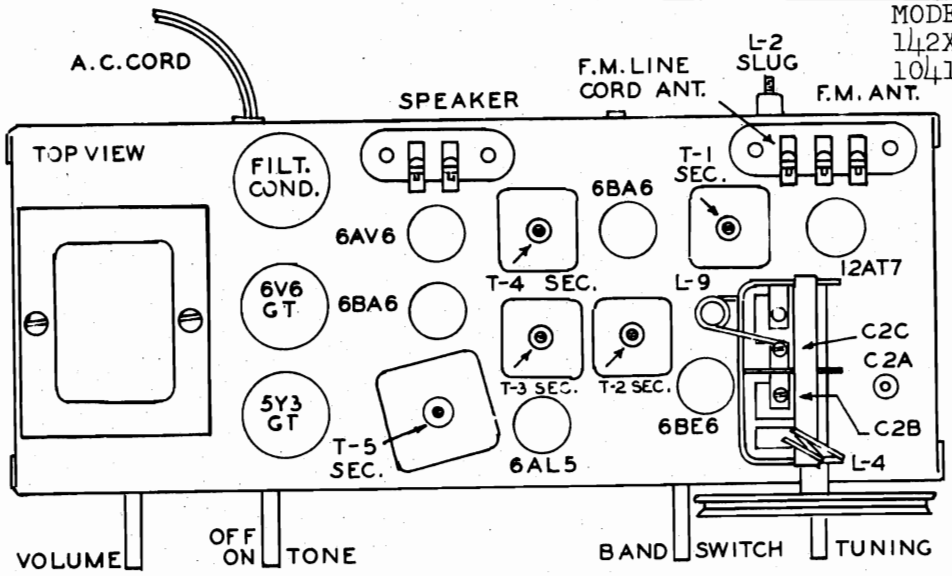

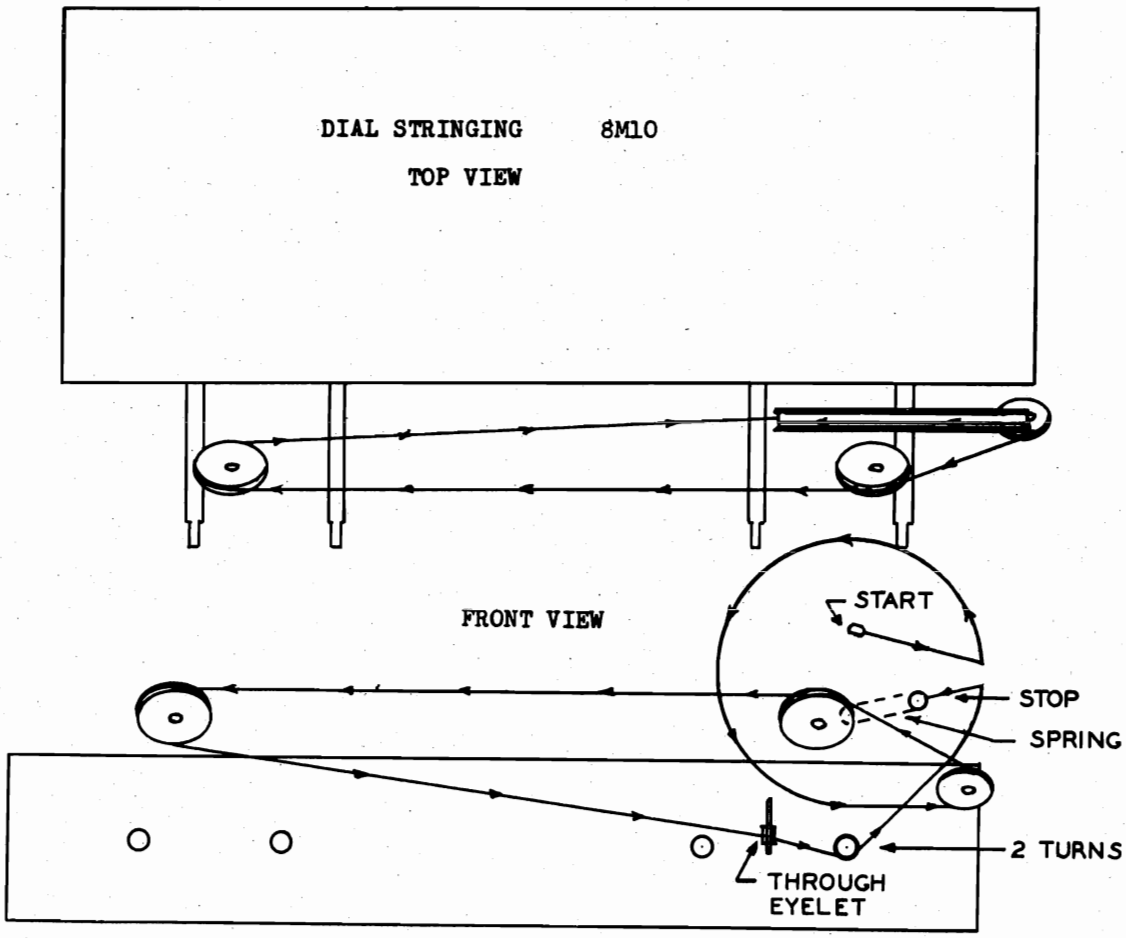

Wave Band Switch	PA4614
*Speaker (Model 1085,1086)	PC3000-12
*Speaker (Models 141X, 142X)	PC63000-19
*Speaker (Models 1040X, 1041X)	PC63000-20
Escutcheon-(Black) (142X,1041X, 1086)	PB40150
Escutcheon-(Maroon)(141X,1040X, 1085)	PB40150-1
Panel(Black)(142X,1041X, 1086)	PC63071
Panel(Maroon)(141X,1040X,1085)	PC63071-1
Knob(142X,1041X,1086)	PA5625-1
Knob(141X,1040X,1085)	PA5654
Washer-Paper (4 Each Model)	PA709-1

©John F. Rider

Compliments of www.nucow.com

MODELS 141X, 142X,
1040X, 1041X, Ch. 8M10

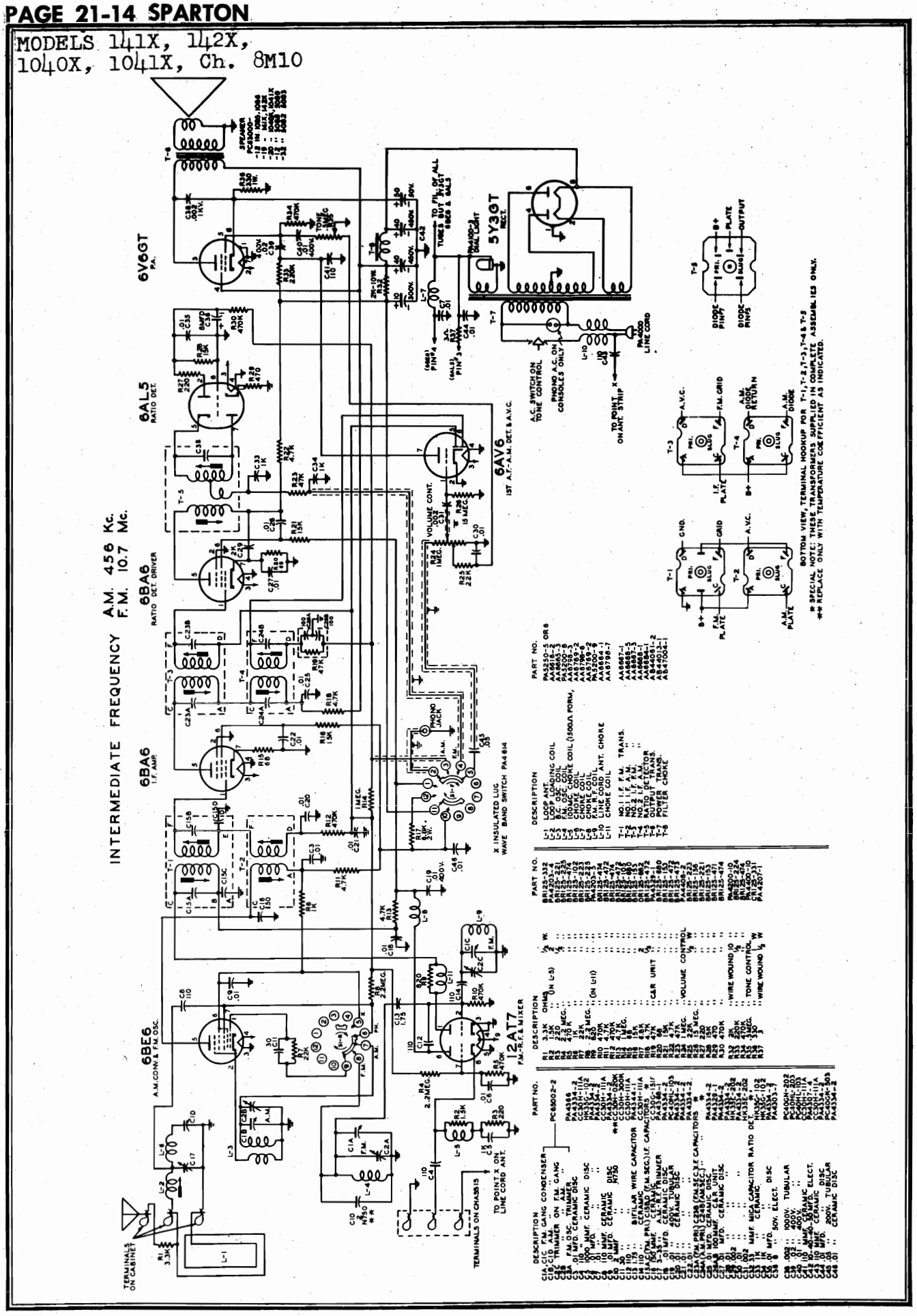

©John F. Rider

Compliments of www.nucow.com

MODELS 1051, 1052, Ch. 6B9

VOLTAGE CHART

Line Voltage: 117 Volts AC

Position of Volume Control: Full with set tuned to quiet channel.
Position of Band Switch: B.C.

TUBE	FUNCTION	Voltage of Socket Prongs to B- See Prong Nos. on Schematic.								
		No. 1	No. 2	No. 3	No. 4	No. 5	No. 6	No. 7	No. 8	G.Cap
35L6	P.A.	0	80*	82	90	0.25	117*	117*	11	
35L6	P.A.	0	80*	82	90	0.25	5.6	48*	11	
12 SQ 7	1st Audio,Det. & A.V.C.	0	-0.6	0	-0.5	0	61	12*	0	
12 BA 6	I.F. AMP.	0	0	48*	36*	90	90	0.8	-	
12 BA 6	R.F. AMP.	0	0	24*	36*	75	90	2.3	-	
12 BE 6	CONV. & OSC.	-3.8	0	24*	12*	90	90	0	-	

NOTES: Voltage readings are for schematic diagram in this bulletin. Allow 15% + or - on all measurements. Always use meter scale which will give greatest deflection within scale limits. All DC measurements made with 20,000 ohms per volt voltmeter. All AC voltages made with rectifier type voltmeter.
* AC Volts.
** Cannot be measured with 20,000 ohms per volt voltmeter.

DUMMY ANTENNA

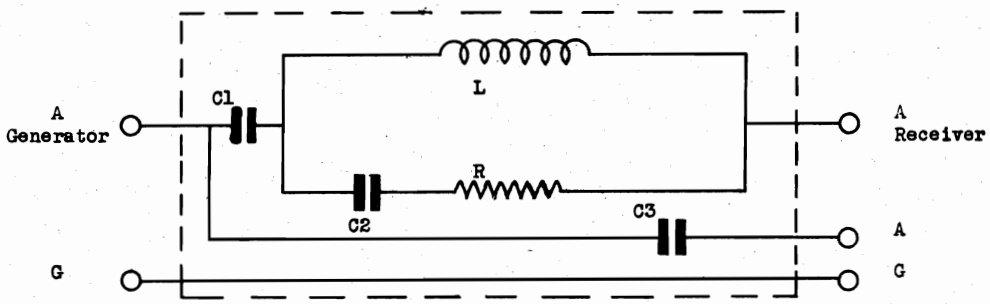

C1 - 200 mmf. Condenser 400 V.D.C.
C2 - 400 mmf. Condenser 400 V.D.C.
C3 - .02 mmf. Condenser 400 V.D.C.
R - 100 Ohms Resistor 1/4 Watt
L - Choke Coil

----Case Shield
Choke Coil Specification
Tubing - 3/8" Diameter Bakelite
Wire - No. 38 Enameled
Turns - 59 closely wound (Impregnated)

NOTE: When using this dummy antenna the generator output impedance should be 10 ohms or lower.

STEP BY STEP ALIGNMENT PROCEDURE

OPER-ATION	ALIGNMENT OF	GENERATOR CONNECTED TO	DUMMY ANTENNA	GENERATOR FREQUENCY	BAND SWITCH SETTING	TUNING CONDENSER SETTING	TRIMMERS	REMARKS
1	Set dial pointer even with left-hand stop line with gang closed.							
2	I.F.	Pin #7 on 12BE6 conv.	.02 MFD Cond.	456 KC.	B.C.	Open	C17A & C17B	Peak Accurately
3							C15A & C15B	Peak Accurately
4	I.F. Rej.	Antenna	.02 MFD	456 KC.	B.C.	Closed	C7 Trim	Adj. to Min.
5	B.C.	Antenna	*	1500 KC.	B.C.	1500 KC	C5 OSC. Trim	Peak Accurately
							C2 ANT. Trim	Peak Accurately
6	Band			600 KC.	B.C.	600 KC	C4 OSC. Pad.	**
7	Repeat Operations 5 and 6							
8	Check Calibration at 600KC., 1000KC. and 1500KC.							
9	S.W.	Antenna	*	18 MC.	S.W.	18 MC.	C6 OSC. Trim	Peak Accurately
10	Band						C3 ANT. Trim	**
11	Repeat Operations 9 & 10							
12	Check Operations at 18MC., 9MC. and 6 MC.							
13	Check Operations 1 to 10 inclusive.							

NOTES: * Use dummy Antenna as shown below. (STD.)
** Rock dial while adjusting for maximum output.

© John F. Rider

Compliments of www.nucow.com

MODELS 1051,
1052, Ch. 6B9

CHASSIS DIAGRAM

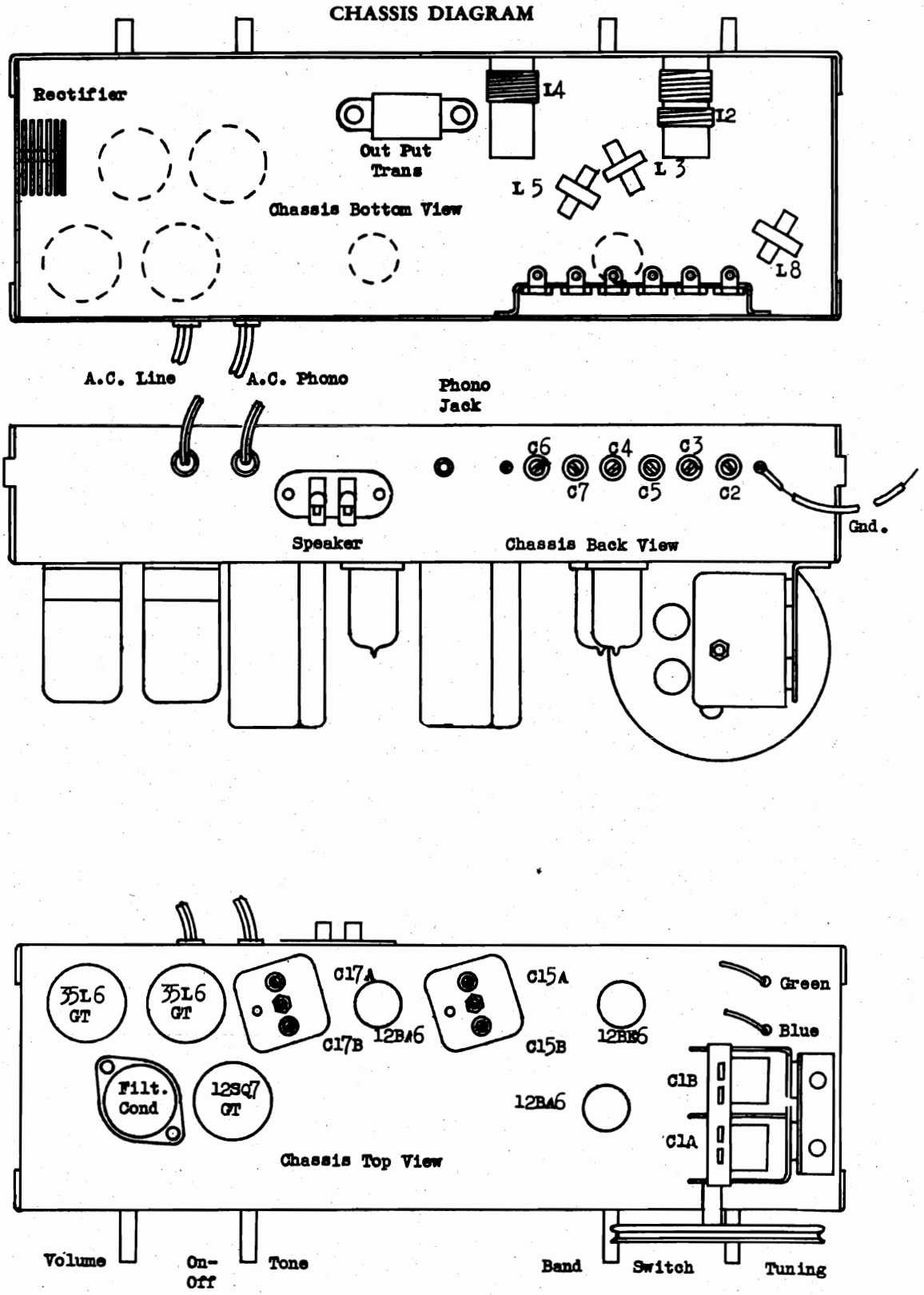

©John F. Rider

Compliments of www.nucow.com

MODELS 1051, 1052, Ch. 6B9

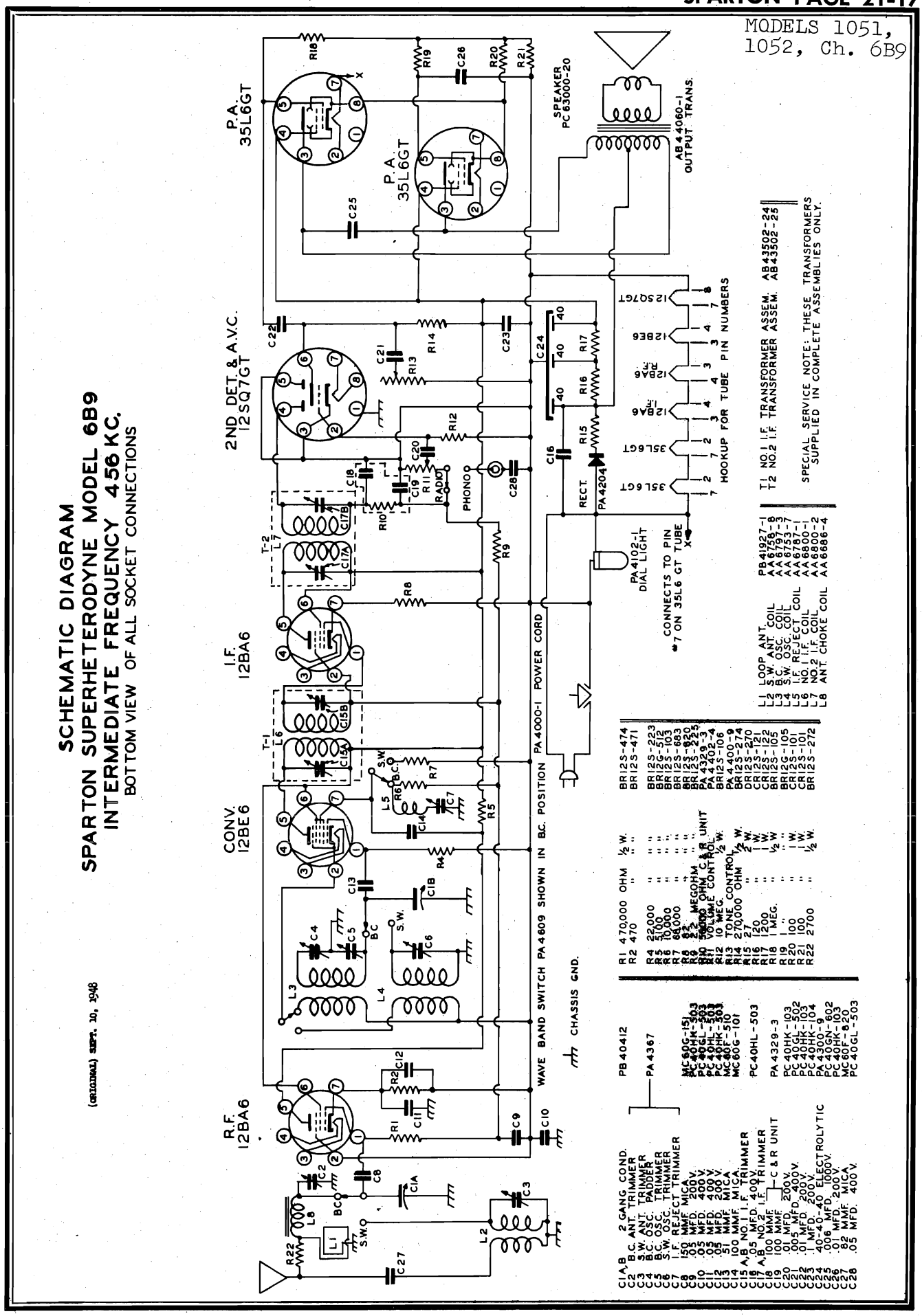

©John F. Rider

Compliments of www.nucow.com

Compliments of www.nucow.com

MODEL 602-170144

DESCRIPTION

Your new automobile receiver is a 5-tube (plus rectifier) superheterodyne, designed to operate from the 6 volt storage battery in your car. It is a universal type of receiver for mounting underneath the dash panel. It has a self-contained PM speaker, and covers the frequency range 540 to 1600 K.C. Two simple controls are provided for operating the receiver. (See Fig. 1)

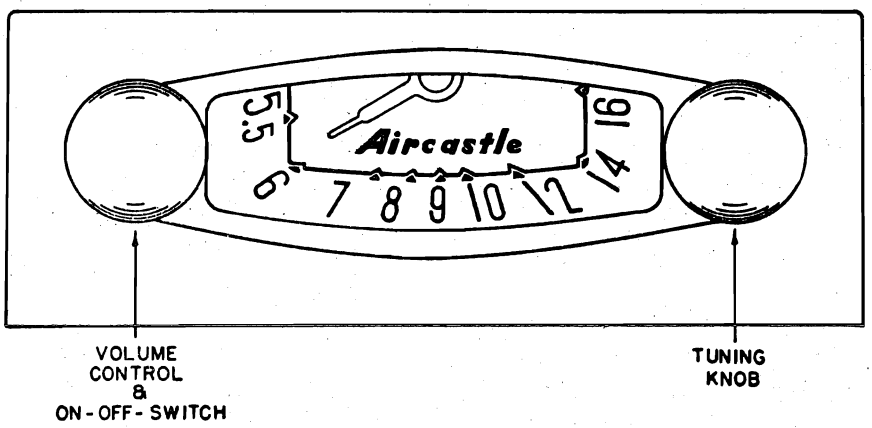

Fig. 1 Front View

SUGGESTIONS FOR ELIMINATING POSSIBLE MOTOR NOISE

IMPORTANT: Special care should be taken when mounting the radio to make sure all paint, grease, rust, etc., is removed from all three mounting points. A good electrical contact at these points will aid materially in eliminating motor noise. (The following steps may not be necessary in all cases. Install your radio and operate it before making changes.)

GENERATOR CONDENSER

The generator condenser must be connected to the battery terminal of the generator in all cases. If your car is equipped with a generator using an automatic regulator, make sure the condenser IS NOT fastened to the field winding terminal. If in doubt, your local car dealer can advise you as to where the car manufacturer recommends connecting it.

DISTRIBUTOR SUPPRESSOR

Detach the high tension wire where it goes into the top of the distributor cap and cut two inches off the end. Screw the piece you cut off into one end of the distributor suppressor and then screw the other end of the suppressor on the long wire which leads to the coil. Insert the wire back into the distributor cap.

IGNITION COILS

In cars where the ignition coil is located on the back side of the instrument panel it is often necessary to use an additional .5 MFD condenser. It must be installed from the battery side of the ignition coil to the closest ground on the ment panel.

Short wires are very important. Where coils are mounted either on the instrument panel or in the driver's compartment, it may be necessary to shield the high tension wire from the coil to the distributor.

they run from the engine compartment up to the instrument panel. These wires should be placed in a flexible wire shield and the shield grounded to frame or motor. This condition is particularly true on the V-8 Ford, as the battery and primary leads run through a special tube which also houses the high tension wires.

BONDING OF FIRE WALL

Bonding the steering column to the fire wall with a short braid may also be effective. Clean the paint from the steering column at the fire wall where the column enters the motor compartment, and solder on a short piece of braid. Ground the end of the braid to the fire wall.

In some cases it may be necessary to ground the tubes and rods coming through the fire wall in order to reduce the interference. Clean them with emery cloth and spot-solder the braid, fastening the end under a convenient screw. A 1/4" piece of wire braid 20 inches long is furnished in the suppression kit assembly for this purpose.

WHEEL STATIC

Wheel Static is a form of interference caused by the rotation of the front wheels of the car, and it is, of course, only noticed when the car is in motion. If this form of interference is present it can be eliminated by installing wheel static collector springs between the inner hub cap and the spindle shaft.

©John F. Rider

Compliments of www.nucow.com

MODEL 602-170144

HIGH AND LOW TENSION WIRES

In many cases the low tension battery leads, etc., are grouped together with the high tension wires. These wires will very often pick up motor noise and feed it into the receiver through the battery circuit. In cases such as these it will be necessary to separate the low tension from the high tension wires and run them through another hole if

ELECTRICAL ACCESSORIES

In some cases, it may be found that car accessories such as electric heaters, lighters, automatic relays, or gauges, may cause interference while in operation. Proper procedure in such cases is to connect a .5 MFD by-pass condenser from ground to the suspected accessory until the source of the interference is found. The condenser then should be permanently mounted in this location.

INSTALLATION

This radio comes to you complete with all hardware necessary for mounting, and also with a distributor suppressor, and generator condenser. By referring to Figure 2 and following the instructions outlined below, you will find that it is very simple to install.

First determine where the receiver is to be mounted by holding it with the hands in the approximate location in the car. Using the front mounting bracket as a template, mark and drill two 7/32" holes in the instrument panel flange. Now secure the mounting bracket to the radio receiver with the screws provided, and then mount the front of the radio to the instrument panel, using the bolts, lock washers and nuts provided for this purpose. The back of the radio is supported by means of the rear mounting strap. The mounting strap should be formed to the correct angles, as illustrated in Figure 2, so that it can then be fastened to the fire wall. After marking and center-punching the fire wall at the correct location, drill with a 3/8" drill. The mounting strap is then secured to the radio and fastened to the fire wall of the car with the 1/4" bolt, lock washer and nut furnished with the receiver.

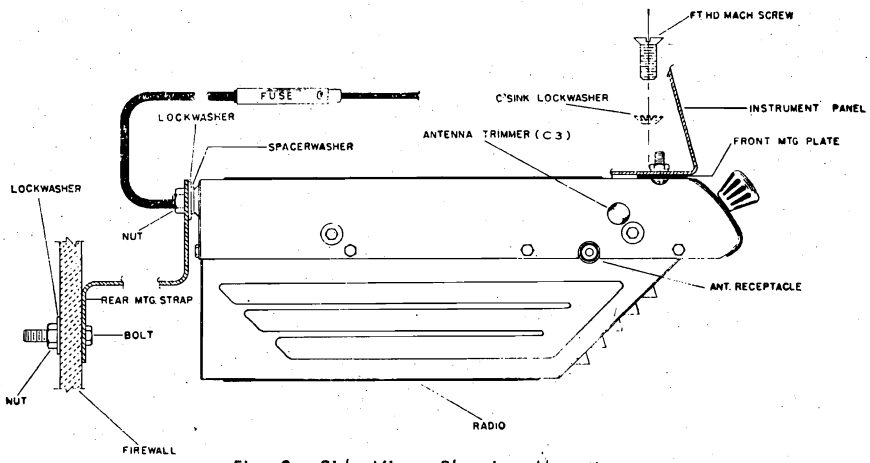

Fig. 2 Side View, Showing Mounting

CONNECTING THE RADIO

The antenna cable should be connected to the radio by inserting the jack into the socket provided on the side of the radio. Connect the battery cable to the hot side of the ammeter behind the instrument panel. The fuse should then be inserted into the cable receptor.

FINAL ADJUSTMENTS

The input circuit has been especially designed to be used with a low capacity antenna, of the fish pole or whip type.

To adjust the antenna trimmer condenser, carefully tune the receiver to a weak station at approximately 1100 kilocycles (K.C.). Remove the snap button covering the antenna trimmer (See Figure 3) and adjust the trimmer for maximum volume. A small screw driver will be needed for this purpose.

S84-413 SUPPRESSION KIT & MISC. PARTS ASSEMBLY

1—S84-233	"A" lead assembly
1—A43-10	Fuse
2—A52-295	Control knobs
1—A81-13	Sleeve (for fuse)
1—S84-193	Suppression Kit consisting of:
	1—.5 MFD Condenser
	1—Distributor Suppressor
	20"—Wire Braid

S84-192 MOUNTING PARTS KIT

1	1/4" Bolt	2	External Tooth Lock Washers
2	1/4" Lock Washers	2	Internal Tooth Lock Washers
2	1/4" Hexagon Nuts	2	10-32 Hexagon Nuts
2	10-32 x 5/8" Screws	1	Washer-Spacer
2	10-32 x 3/8" Screws		

ACCESSORIES FURNISHED FOR INSTALLATION

All of the parts that are needed for installing this receiver are furnished in the Mounting Parts Kit, part No. S84-192, and the Suppression & Misc. Parts Kit, part No. S84-413, as listed below. Also supplied are the rear mounting strap, part No. B31-134, and the front mounting plate, part No. A31-158.

NOTE: For shipping, the two control knobs have been removed from the tuning and volume control shafts. To install the knobs, line up the flat side of the knob spring (inside knob), with the flat side of the control shaft and push the knob forward until it stops.

©John F. Rider

Compliments of www.nucow.com

MODEL 602-170144

ELECTRICAL SPECIFICATIONS

Power Supply	6.3 volts DC
Current	6.2 amp. average
Frequency Range	540 to 1600 KC
I. F. Frequency	455 KC
Speaker	4" P. M.
Power Output	1.2 watts, undistorted 2.5 watts, maximum
Sensitivity	10 microvolt average for 1 watt output
Selectivity	50 KC broad at 1000 times signal, at 1000 KC

This receiver contains the following:

1—6SK7GT—R. F. Amplifier.

1—6SA7GT—Converter.

1—6SK7GT—I.F. Amplifier.

1—6SQ7—Detector—AVC—1st audio.

1—6V6GT—Power output.

A 6X5GT Rectifier is used.

SERVICE NOTES

Voltages taken from the different points of the circuit to the chassis are measured with volume control in maximum position, all tubes in their sockets, no signal applied, and with a volt meter having a resistance of 20,000 ohms per volt. These voltages are clearly shown on the voltage chart, (Fig. 4).

All voltages should be measured with an input voltage of 6.3 volts DC.

To check for open by-pass condensers, shunt each condenser with another one having the same capacity and voltage rating which is known to be good until the defective unit is located.

ALIGNING INSTRUCTION

Never attempt any adjustments on this receiver unless it becomes necessary to replace a coil or transformer, or the adjustments have been tampered with in the field. Always make certain that other circuit components, such as tubes, condensers, resistors, etc., are normal before proceeding with realignment.

If realignment is necessary follow the instructions given under the heading "ALIGNMENT PROCEDURE". After realignment has been completed repeat the procedure as a final check.

INSTRUCTIONS FOR REMOVING CHASSIS FROM THE CASE

The bottom cover (the one with the speaker louvers) can be removed to permit servicing of major components, such as tubes and vibrator, by removing the eight (8) screws holding it to the top cover. There are three (3) screws on each side, one (1) in the rear, and one (1) in the front.

CAUTION: Before attempting to remove the top cover, to service condensers, resistors, etc., the screw connecting the spark plate to the "A" terminal (inside case) must be removed. This is a round head screw, and is located on the rear of the case, close to the mounting stud bolt. It is recessed in a ½ inch hole in the case itself, thereby permitting contact with the spark plate.

After removing the spark plate screw, remove the two knobs by pulling forward and remove the eight (8) screws securing the cover to the chassis. Lift the chassis at the rear, at the same time moving it away from the front of the case so that the volume and tuning shafts will clear the holes in the cover.

NOTE: When reinstalling the chassis into the case, be sure the screw connecting the spark plate to the "A" terminal (inside case) is tightened very securely, otherwise the receiver will not operate properly.

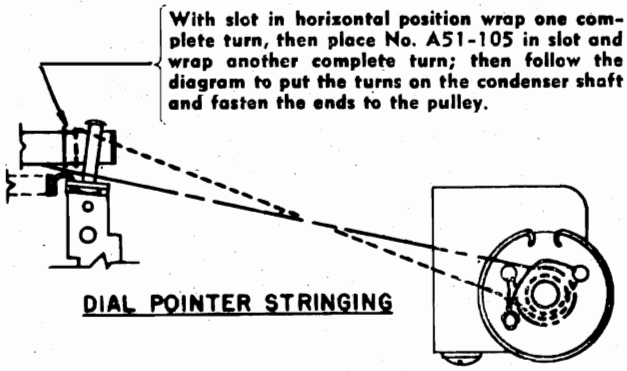

DIAL POINTER STRINGING

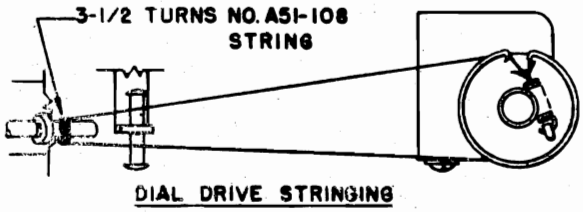

DIAL DRIVE STRINGING

©John F. Rider

Compliments of www.nucow.com

ALIGNMENT PROCEDURE

Volume control—Maximum, all adjustments.

No signal applied to antenna.

Power input—6.3 volts.

Connect dummy antenna in series with output lead of signal generator.

Connect output meter across voice coil.

Connect ground lead of signal generator to chassis.

Repeat alignment procedure as a final check.

The following equipment is necessary for proper alignment:

Signal generator that will provide the test frequencies as listed, modulated 400 cycles, 30%.

Non-metallic screwdriver.

Output meter. (1.8 volt for 1 watt output.)

Dummy antennas—.1 MFD., 75 MMFD.

For alignment points refer to Figures 5 and 6.

Dial Setting	Generator Frequency	Dummy Ant.	Generator Connections	Trimmer Reference	Trimmer Adjustment	Trimmer Function
Fully Open	455 KC	.1 MFD.	6SA7 Grid	T2	Maximum	Output I.F.
Fully Open	455 KC	.1 MFD.	6SA7 Grid	T1	Maximum	Input I.F.
Fully Open	1600 KC	75 MMFD.	Ant. lead	C1B	Maximum	Oscillator
Tune in signal from generator	1400 KC	75 MMFD.	Ant. lead	C1A	Maximum	Antenna

NOTE: The antenna trimmer condenser, C3, (see Fig. 2) should be adjusted after the radio is installed in the car. Tune the receiver to a weak station at about 1100 KC and adjust this trimmer for maximum volume.

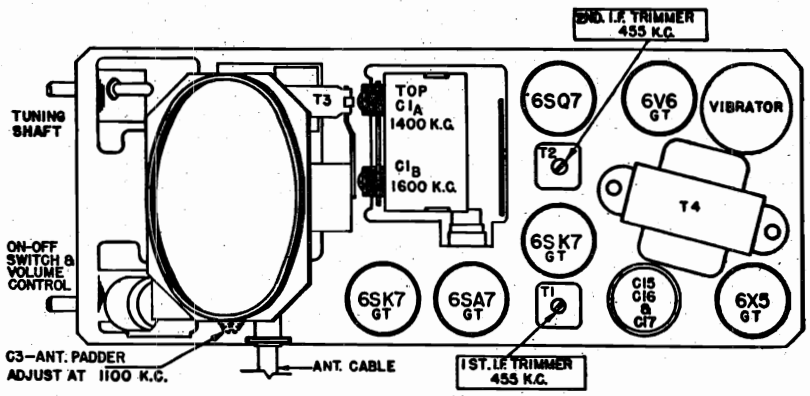

Fig. 5. Tube, Rectifier and Trimmer Locations

©John F. Rider

Compliments of www.nucow.com

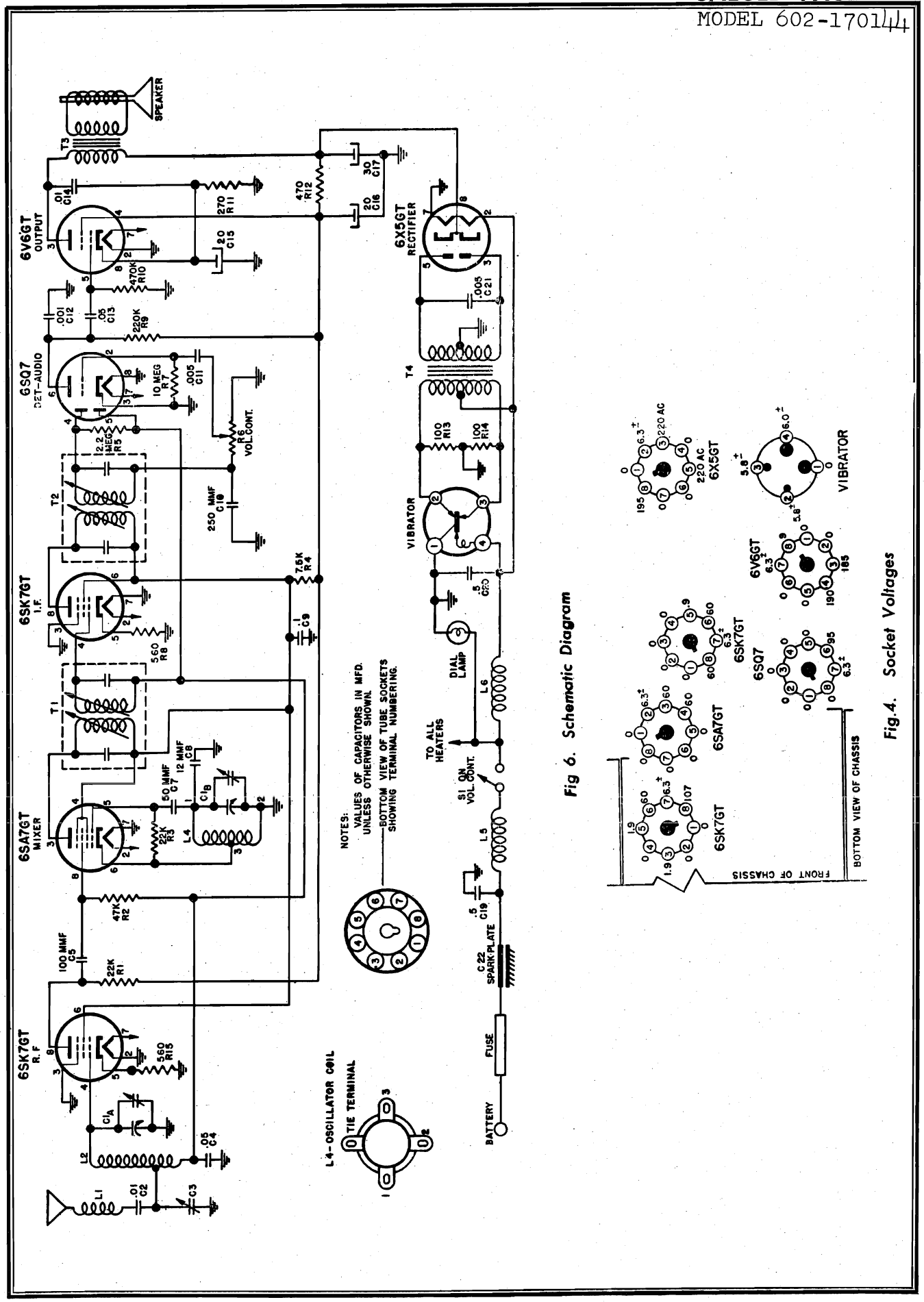

Fig 6. Schematic Diagram

Fig.4. Socket Voltages

©John F. Rider

Compliments of www.nucow.com

MODEL 602-170144

PARTS LIST

CONDENSERS

Schematic Diagram Reference	Part No.	Description
C1A, C1B	B19-201	Variable condenser
C2, C14	A16-192	.01 MFD 400 volt condenser
C3	A20-145	Trimmer condenser
C4	A16-189	.05 MFD 400 volt condenser
C5	A15-196	100 MMFD ceramic condenser
C7	A15-204	50 MMFD ceramic condenser
C8	A15-205	12 MMFD ceramic condenser, temp. comp.
C9	A16-187	.1 MFD 400 volt condenser
C10	A15-176	250 MMFD mica condenser
C11	A16-190	.005 MFD 600 volt condenser
C12	A16-195	.001 MFD ceramic condenser
C13	A16-193	.05 MFD 600 volt condenser
C15	A18-289	20 MFD 25 volt electrolytic condenser
C16		20 MFD 350 volt electrolytic condenser
C17		30 MFD 350 volt electrolytic condenser
C19, C20	A16-184	.5 MFD 100 volt condenser
C21	A16-185	.005 MFD 1600 volt oil filled condenser

RESISTORS

R1, R3	A60-659	22K ohm ½ watt 20% resistor
R2	A60-685	47K ohm ½ watt 20% resistor
R4	A60-769	7.5K ohm 2 watt 10% resistor
R5	A60-726	2.2 megohm ½ watt 20% resistor
R6	A24-177	Volume control, 500,000 ohm, with switch
R7	A60-728	10 megohm ½ watt 20% resistor
R8, R15	A60-758	560 ohm ½ watt 10% resistor
R9	A60-667	220K ohm ½ watt 20% resistor
R10	A60-731	470K ohm ½ watt 20% resistor
R11	A60-771	270 ohm ½ watt 10% resistor
R12	A60-770	470 ohm ½ watt 10% resistor
R13, R14	A60-752	100 ohm ½ watt 10% resistor

COILS AND TRANSFORMERS

L1	A10-527	Antenna Loading Coil
L2	B10-511	Antenna Coil
L4	A10-512	Oscillator Coil
L5	A33-229	Choke, "A" Line
L6	A33-228	Choke, vibrator hash
T1	A10-508	1st I.F. Transformer
T2	A10-509	2nd I.F. Transformer
T3	B80-242	Output Transformer (Part of Speaker, not furnished separately)
T4	B80-243	Power transformer

DIAL PARTS

A11-303	Bracket, Dial Scale
B11-328	Bracket, String Guide
A72-29	Bushing, Tuning Shaft Bearing
A70-130	Clip, Spring, for Tuning Shaft
A58-55	Dial Pointer
B67-551	Dial Scale
A28-101	Gasket for Speaker
A52-304	Knob
A11-329	Link, String Guide
A89-10	Pilot Light, Type G.E. No. 422
A65-37	Rivet, Shoulder, for Dial Pointer Stringing
A65-42	Rivet, Shoulder, for String Guide Brkt. and Link
A65-12	Rivet, Shoulder, for Dial Drive Stringing
A75-70	Shaft, tuning
A75-74	Shaft, for Dial Pointer
A70-132	Spring, for Pilot Light Socket
A70-135	Spring, Dial Drive String Tension
A70-142	Spring, Pointer Drive String Tension
A51-105	String, Pointer Travel, 17"
A51-108	String, Condenser Drive, 19"

MISCELLANEOUS

S84-233	"A" lead assembly
A83-421	Clip, I.F. Transformer Mounting
A83-517	Clip, Oscillator Coil Mounting
A43-10	Fuse, 15 Amp.
A47-112	Grommet, rubber, (Spkr. & Gang mounting)
B31-134	Mounting strap, rear
B31-158	Mounting Plate, Front
S84-192	Mounting parts kit
A87-38	Receptacle, Antenna Cable
B79-379	Speaker, 4" P.M. (includes Output Transformer)
S84-322	Suppression Kit Assembly
A34-105	Vibrator
A83-519	Wiper, grounding, for case covers

Note: Tubular condensers must be high temperature (85°C) wax type.

©John F. Rider

Compliments of www.nucow.com

MODEL 602-182144

INSTALLATION

This radio comes to you complete with all hardware necessary for mounting, and also with a distributor suppressor, and generator condenser. By referring to Figures 1 and 2, and following the instructions outlined below, you will find that it is very simple to install.

First determine where the receiver is to be mounted by holding it with the hands in the approximate location in the car. Using the front mounting bracket as a template, mark and drill two 7/32" holes in the instrument panel flange. Now secure the mounting bracket to the radio receiver with the screws provided, and then mount the front of the radio to the instrument panel, using the bolts, lock washers and nuts provided for this purpose. The back of the radio is supported by means of the rear mounting strap. The mounting strap should be formed to the correct angles, as illustrated in Figure 2, so that it can then be fastened to the fire wall. After marking and center-punching the fire wall at the correct location, drill with a 3/8" drill. The mounting strap is then secured to the radio and fastened to the fire wall of the car with the 1/4" bolt, lock washer and nut furnished with the receiver.

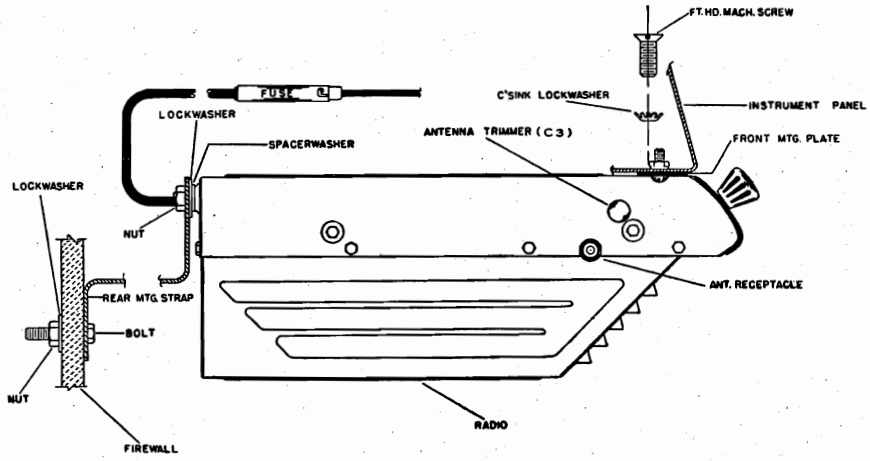

Fig. 2. Side View, Showing Mounting

CONNECTING THE RADIO

The antenna cable should be connected to the radio by inserting the jack into the socket provided on the side of the radio. Connect the battery cable to the hot side of the ammeter behind the instrument panel. The fuse should then be inserted into the cable receptor.

FINAL ADJUSTMENTS

The input circuit has been especially designed to be used with a low capacity antenna, of the fish pole or whip type.

To adjust the antenna trimmer condenser, carefully tune the receiver to a weak station at approximately 1100 kilocycles (K.C.). Remove the snap button covering the antenna trimmer (See Figure 2) and adjust the trimmer for maximum volume. A small screw driver will be needed for this purpose.

ACCESSORIES FURNISHED FOR INSTALLATION

All of the parts that are needed for installing this receiver are furnished in the Mounting Parts Kit, part No. S84-192, and the Suppression & Misc. Parts Kit, part No. S84-445, as listed below. Also supplied are the rear mounting strap, part No. B31-134, and the front mounting plate, part No. A31-158.

NOTE: For shipping, the two control knobs have been removed from the tuning and volume control shafts. To install the knobs, line up the flat side of the knob spring (inside knob), with the flat side of the control shaft and push the knob forward until it stops.

S84-192 MOUNTING PARTS KIT

1	1/4" Bolt	2	External Tooth Lock Washers
2	1/4" Lock Washers	2	Internal Tooth Lock Washers
2	1/4" Hexagon Nuts	2	10-32 Hexagon Nuts
2	10-32 x 5/8" Screws	1	Washer-Spacer
2	10-32 x 3/8" Screws		

S84-445 SUPPRESSION KIT & MISC. PARTS ASSEMBLY

1—S84-233	"A" lead assembly
1—A43-10	Fuse
2—A52-314	Control knobs
1—A81-13	Sleeve (for fuse)
1—S84-322	Suppression Kit consisting of:
	1—.5 MFD Condenser
	1—Distributor Suppressor
	20"—Wire Braid

©John F. Rider

Compliments of www.nucow.com

MODEL 602-182144

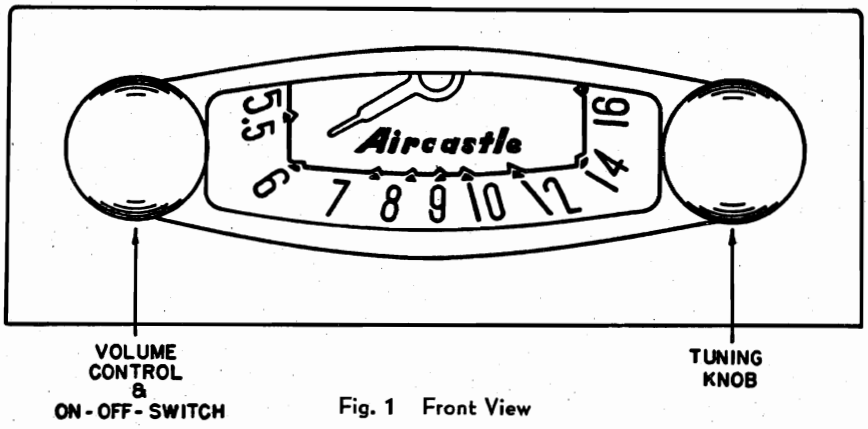

Fig. 1 Front View

SUGGESTIONS FOR ELIMINATING POSSIBLE MOTOR NOISE

IMPORTANT: Special care should be taken when mounting the radio to make sure all paint, grease, rust, etc., is removed from all three mounting points. A good electrical contact at these points will aid materially in eliminating motor noise. (The following steps may not be necessary in all cases. Install your radio and operate it before making changes.)

GENERATOR CONDENSER

The generator condenser must be connected to the battery terminal of the generator in all cases. If your car is equipped with a generator using an automatic regulator, make sure the condenser IS NOT fastened to the field winding terminal. If in doubt, your local car dealer can advise you as to where the car manufacturer recommends connecting it.

DISTRIBUTOR SUPPRESSOR

Detach the high tension wire where it goes into the top of the distributor cap and cut two inches off the end. Screw the piece you cut off into one end of the distributor suppressor and then screw the other end of the suppressor on the long wire which leads to the coil. Insert the wire back into the distributor cap.

IGNITION COILS

In cars where the ignition coil is located on the back side of the instrument panel it is often necessary to use an additional .5 MFD condenser. It must be installed from the battery side of the ignition coil to the closest ground on the instrument panel.

Short wires are very important. Where coils are mounted either on the instrument panel or in the driver's compartment, it may be necessary to shield the high tension wire from the coil to the distributor.

HIGH AND LOW TENSION WIRES

In many cases the low tension battery leads, etc., are grouped together with the high tension wires. These wires will very often pick up motor noise and feed it into the receiver through the battery circuit. In cases such as these it will be necessary to separate the low tension from the high tension wires and run them through another hole if they run from the engine compartment up to the instrument panel. These wires should be placed in a flexible wire shield and the shield grounded to frame or motor. This condition is particularly true on the V-8 Ford, as the battery and primary leads run through a special tube which also houses the high tension wires.

BONDING OF FIRE WALL

Bonding the steering column to the fire wall with a short braid may also be effective. Clean the paint from the steering column at the fire wall where the column enters the motor compartment, and solder on a short piece of braid. Ground the end of the braid to the fire wall.

In some cases it may be necessary to ground the tubes and rods coming through the fire wall in order to reduce the interference. Clean them with emery cloth and spot-solder the braid, fastening the end under a convenient screw. A 1/4" piece of wire braid 20 inches long is furnished in the suppression kit assembly for this purpose.

WHEEL STATIC

Wheel Static is a form of interference caused by the rotation of the front wheels of the car, and it is, of course, only noticed when the car is in motion. If this form of interference is present it can be eliminated by installing wheel static collector springs between the inner hub cap and the spindle shaft.

ELECTRICAL ACCESSORIES

In some cases, it may be found that car accessories such as electric heaters, lighters, automatic relays, or gauges, may cause interference while in operation. Proper procedure in such cases is to connect a .5 MFD by-pass condenser from ground to the suspected accessory until the source of the interference is found. The condenser then should be permanently mounted in this location.

©John F. Rider

Compliments of www.nucow.com

ELECTRICAL SPECIFICATIONS

Power Supply.....6.3 volts DC
Current .....6.2 amp. average
Frequency Range.....540 to 1600 KC
I. F. Frequency.....455 KC
Speaker.....4" P. M.
Power Output.....1.2 watts, undistorted
2.5 watts, maximum
Sensitivity.....10 microvolt average for 1 watt output
Selectivity...50 KC broad at 1000 times signal, at 1000 KC

This receiver contains the following:

1—6SK7GT—R. F. Amplifier.

1—6SA7GT—Converter.

1—6SK7GT—I.F. Amplifier.

1—6SQ7—Detector—AVC—1st audio.

1—6V6GT—Power output.

A 6X5GT Rectifier is used.

SERVICE NOTES

Voltages taken from the different points of the circuit to the chassis are measured with volume control in maximum position, all tubes in their sockets, no signal applied, and with a volt meter having a resistance of 20,000 ohms per volt. These voltages are clearly shown on the voltage chart, (Fig. 4).

All voltages should be measured with an input voltage of 6.3 volts DC.

To check for open by-pass condensers, shunt each condenser with another one having the same capacity and voltage rating which is known to be good until the defective unit is located.

ALIGNING INSTRUCTION

Never attempt any adjustments on this receiver unless it becomes necessary to replace a coil or transformer, or the adjustments have been tampered with in the field. Always make certain that other circuit components, such as tubes, condensers, resistors, etc., are normal before proceeding with realignment.

If realignment is necessary follow the instructions given under the heading "ALIGNMENT PROCEDURE". After realignment has been completed repeat the procedure as a final check.

INSTRUCTIONS FOR REMOVING CHASSIS FROM THE CASE

The bottom cover (the one with the speaker louvers) can be removed to permit servicing of major components, such as tubes and vibrator, by removing the eight (8) screws holding it to the top cover. There are three (3) screws on each side, one (1) in the rear, and one (1) in the front.

CAUTION: Before attempting to remove the top cover, to service condensers, resistors, etc., the screw connecting the spark plate to the "A" terminal (inside case) must be removed. This is a round head screw, and is located on the rear of the case, close to the mounting stud bolt. It is recessed in a ½ inch hole in the case itself, thereby permitting contact with the spark plate.

After removing the spark plate screw, remove the two knobs by pulling forward and remove the eight (8) screws securing the cover to the chassis. Lift the chassis at the rear, at the same time moving it away from the front of the case so that the volume and tuning shafts will clear the holes in the cover.

NOTE: When reinstalling the chassis into the case, be sure the screw connecting the spark plate to the "A" terminal (inside case) is tightened very securely, otherwise the receiver will not operate properly.

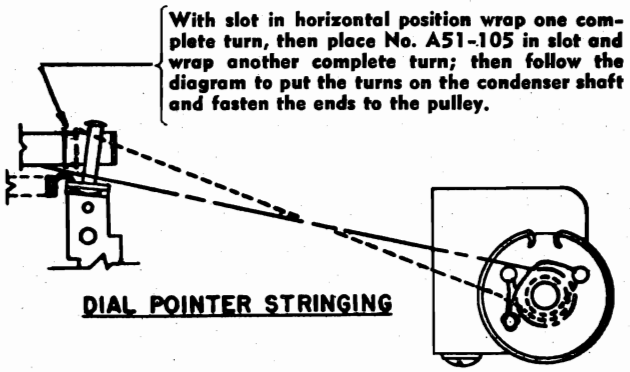

DIAL POINTER STRINGING

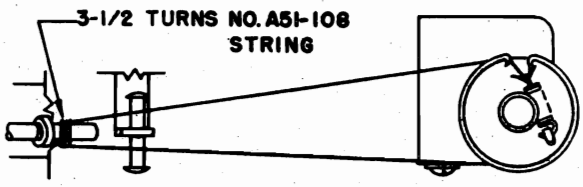

DIAL DRIVE STRINGING

©John F. Rider

Compliments of www.nucow.com

ALIGNMENT PROCEDURE

Volume control—Maximum, all adjustments.

No signal applied to antenna.

Power input—6.3 volts.

Connect dummy antenna in series with output lead of signal generator.

Connect output meter across voice coil.

Connect ground lead of signal generator to chassis.

Repeat alignment procedure as a final check.

The following equipment is necessary for proper alignment:

Signal generator that will provide the test frequencies as listed, modulated 400 cycles, 30%.

Non-metallic screwdriver.

Output meter. (1.8 volt for 1 watt output.)

Dummy antennas—.1 MFD., 75 MMFD.

For alignment points refer to Figures 5 and 6.

Dial Setting	Generator Frequency	Dummy Ant.	Generator Connections	Trimmer Reference	Trimmer Adjustment	Trimmer Function
Fully Open	455 KC	.1 MFD.	6SA7 Grid	T2	Maximum	Output I.F.
Fully Open	455 KC	.1 MFD.	6SA7 Grid	T1	Maximum	Input I.F.
Fully Open	455 KC	75 MMFD.	Ant. lead	L3	Minimum	Wave trap
Fully Open	1600 KC	75 MMFD.	Ant. lead	C1B	Maximum	Oscillator
Tune in signal from generator	1400 KC	75 MMFD.	Ant. lead	C3	Maximum	Antenna

NOTE: The antenna trimmer condenser, C3, (see Fig. 2) should be adjusted after the radio is installed in the car. Tune the receiver to a weak station at about 1100 KC and adjust this trimmer for maximum volume.

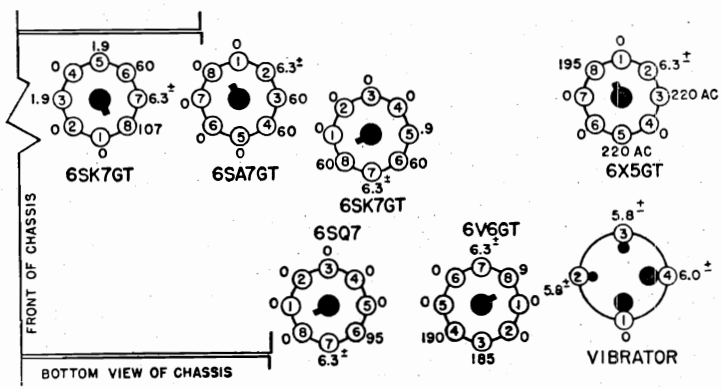

Fig.4. Socket Voltages

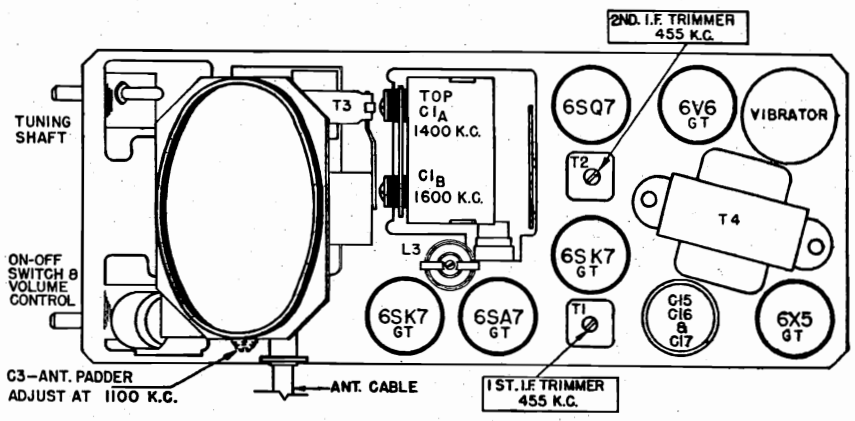

Fig. 5. Tube, Rectifier and Trimmer Locations

©John F. Rider
Compliments of www.nucow.com

MODEL 602-182144

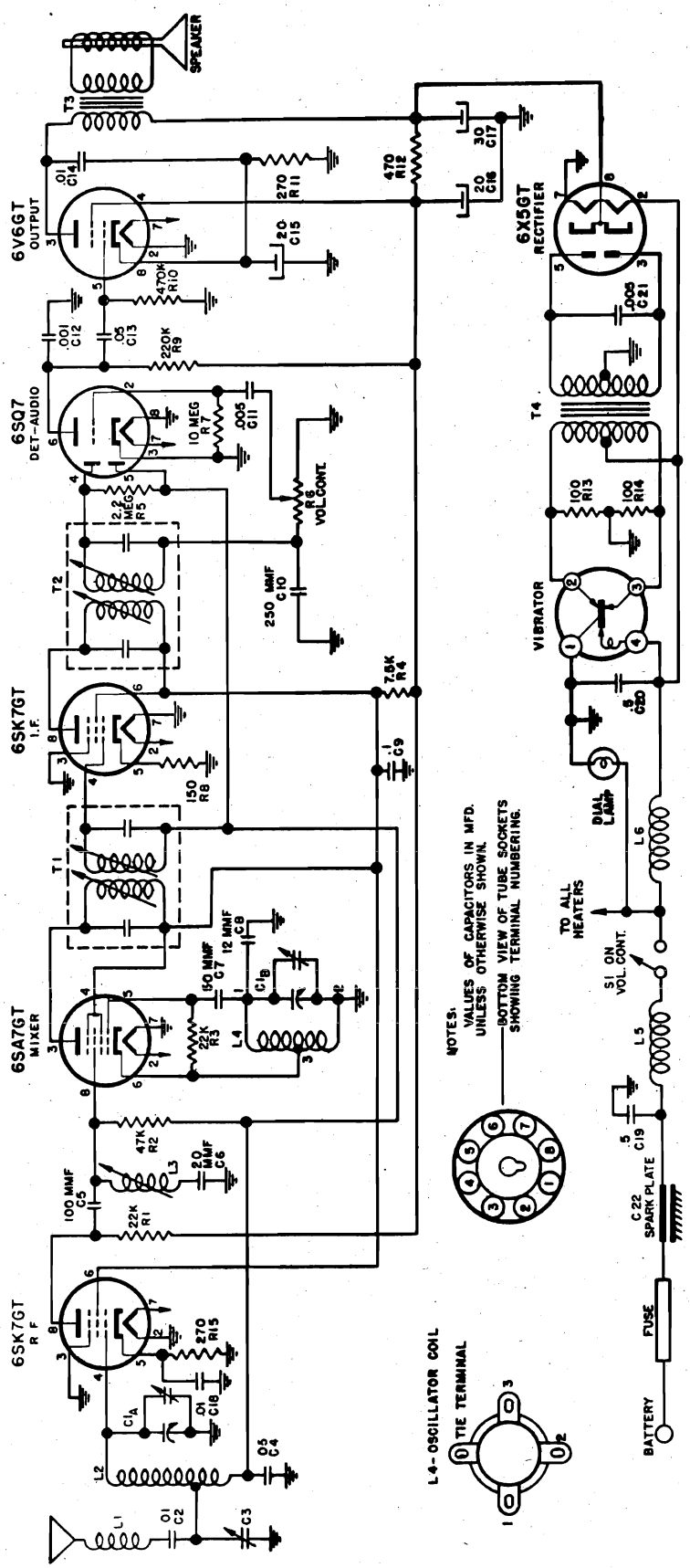

Fig 6. Schematic Diagram

©John F. Rider

Compliments of www.nucow.com

MODEL 602-182144

Schematic Diagram Reference	Part No.	Description
		CONDENSERS
C1A, C1B	B19-201	Variable condenser
C2, C14, C18	A16-192	.01 MFD 400 volt condenser
C3	A20-145	Trimmer condenser
C4	A16-189	.05 MFD 400 volt condenser
C5	A15-196	100 MMFD ceramic condenser
C6	A15-202	20 MMFD ceramic condenser
C7	A15-204	50 MMFD ceramic condenser
C8	A15-205	12 MMFD ceramic condenser, temp. comp.
C9	A16-187	.1 MFD 400 volt condenser
C10	A15-176	250 MMFD mica condenser
C11	A16-190	.005 MFD 600 volt condenser
C12	A16-195	.001 MFD ceramic condenser
C13	A16-193	.05 MFD 600 volt condenser
C15	A18-289	20 MFD 25 volt electrolytic condenser
C16	A18-289	20 MFD 350 volt electrolytic condenser
C17	A18-289	30 MFD 350 volt electrolytic condenser
C19, C20	A16-184	.5 MFD 100 volt condenser
C21	A16-185	.005 MFD 1600 volt oil filled condenser
		RESISTORS
R1, R3	A60-659	22K ohm ½ watt 20% resistor
R2	A60-685	47K ohm ½ watt 20% resistor
R4	A60-769	7.5K ohm 2 watt 10% resistor
R5	A60-726	2.2 megohm ½ watt 20% resistor
R6	A24-182	Volume control, 500,000 ohm, with switch
R7	A60-728	10 megohm ½ watt 20% resistor
R8	A60-767	560 ohm ½ watt 10% resistor
R9	A60-667	220K ohm ½ watt 20% resistor
R10	A60-731	470K ohm ½ watt 20% resistor
R11, R15	A60-771	270 ohm ½ watt 10% resistor
R12	A60-770	470 ohm ½ watt 10% resistor
R13, R14	A60-752	100 ohm ½ watt 10% resistor
		COILS AND TRANSFORMERS
L1	A10-527	Antenna Loading Coil
L2	B10-511	Antenna Coil
L3	A10-510	I.F. Trap Coil
L4	A10-512	Oscillator Coil
L5	A33-229	Choke, "A" Line
L6	A33-228	Choke, vibrator hash
T1	A10-508	1st I.F. Transformer
T2	A10-509	2nd I.F. Transformer
T3	B80-242	Output Transformer (Part of Speaker, not furnished separately)
T4	B80-243	Power transformer
		DIAL PARTS
	A11-303	Bracket, Dial Scale
	B11-328	Bracket, String Guide
	A72-36	Bushing, Tuning Shaft Bearing
	A70-130	Clip, Spring, for Tuning Shaft
	A58-55	Dial Pointer
	B67-551	Dial Scale
	A28-101	Gasket for Speaker
	A52-314	Knob
	A11-329	Link, String Guide
	A89-10	Pilot Light, Type G.E. No. 422
	A65-37	Rivet, Shoulder, for Dial Pointer Stringing
	A65-42	Rivet, Shoulder, for String Guide Brkt. and Link
	A65-12	Rivet, Shoulder, for Dial Drive Stringing
	A75-83	Shaft, tuning
	A75-74	Shaft, for Dial Pointer
	A70-132	Spring, for Pilot Light Socket
	A70-135	Spring, Dial Drive String Tension
	A70-142	Spring, Pointer Drive String Tension
	A51-105	String, Pointer Travel, 17"
	A51-108	String, Condenser Drive, 19"
		MISCELLANEOUS
	S84-233	"A" lead assembly
	A83-421	Clip, I.F. Transformer Mounting
	A83-517	Clip, Oscillator Coil Mounting
	A43-10	Fuse, 15 Amp.
	A47-112	Grommet, rubber, (Spkr. & Gang mounting)
	B31-134	Mounting strap, rear
	B31-158	Mounting Plate, Front
	S84-192	Mounting parts kit
	A87-38	Receptacle, Antenna Cable
	B79-360	Speaker, 4" P.M. (includes Output Transformer)
	S84-322	Suppression Kit Assembly
	A34-105	Vibrator
	A83-519	Wiper, grounding, for case covers

Note: Tubular condensers must be high temperature (85°C) wax type.

©John F. Rider

Compliments of www.nucow.com

MODEL 606-400WB

DESCRIPTION

Your New Aircastle Radio is a 4-Tube Superhetrodyne receiver designed to cover a frequency range of from 540 kilocycles to 1725 kilocycles (K.C.). The tubes used are--

1A7 GT--Osc. Converter
1N5 GT--I.F. Amplifier
1H5 GT--AVC Det. Audio Amplifier
3Q5 GT--Power Output

INSTALLATION

This receiver has been designed to operate on a self-contained battery containing both the 'B' battery (90 Volts) and the 'A' Battery (1½ Volts) Aircastle No. 1491.

After inserting the battery plug of the receiver into the socket on the battery, the battery may be placed inside the cabinet in the space provided.

Anyone of the following batteries may also be used with this receiver: Eveready No. 748, General No. 60D1-11 L, Burgess No. 17G-D60, Ray-O-Vac No. AB 82.

For best results an outside antenna about 75-100 feet long, including the lead-in, should be used. It should be erected as high as possible, and as far away from surrounding objects as practical. When the receiver is used close to powerful broadcasting stations it may be desirable to use a shorter antenna. (For most ordinary instalations use Aircastle House Mast Aerial No. 1396.)

To obtain the best possible performance a good ground should be used. This can be a water pipe, or a galvanized pipe driven into the ground. It should be connected to the ground lead (black) of the receiver. Connect the antenna wire to the other lead coming from the receiver.

OPERATION

Turn the 'On-Off' Switch and Volume Control (left-hand Control) to the right about half its range. This supplies power to the receiver. Now select the desired station by rotating the 'Station Selector', (right-hand Control). For best tone, always tune the desired station with the Volume turned low. This enables you to get the exact point where the station comes in best. Then adjust the Volume Control to the desired level.

ALIGNMENT PROCEDURE

Volume control--Maximum: all adjustments.
Connect ground lead of signal generator to chassis.
Connect dummy antenna in series with output lead of signal generator.
Connect output meter across voice coil of speaker.

The following equipment is necessary for proper alignment:
Signal generator that will provide the test frequencies as listed, 30% modulated, 400 c.p.s.
Output meter.
Non-metallic screwdriver.
Dummy antennas--.1 mfd., .00025 mfd.

Position of Variable	Generator Frequency	Dummy Ant. Mfd.	Generator Connections	Trimmer Adjustment	Trimmer Function
Fully open	455 KC	.1	1A7 Grid (Stator of CIA)	T2	Output I.F.
Fully open	455 KC	.1	1A7 Grid (Stator of CIA)	T1	Input I.F.
Fully open	1725 KC	.00025	Antenna Lead	CIB	Oscillator
Tune in signal from generator	1400 KC	.00025	Antenna Lead	CIA	Antenna

VOLTAGE CHART

All voltages measured with a 1000 ohm per volt meter on the 150 volt scale. For the following voltages the "B" battery section of the power pack should read 90 volts under load, the "A" section 1½ volts.

TUBE	PIN NUMBERS							
	1	2	3	4	5	6	7	8
1A7	0	1.5	85	37	0	85	0	0
1N5	0	1.5	85	85	0	0	0	0
1H5	0	1.5	17	0	0	0	0	0
3Q5	0	1.5	83	85	0	5	1.5	

©John F. Rider

Compliments of www.nucow.com

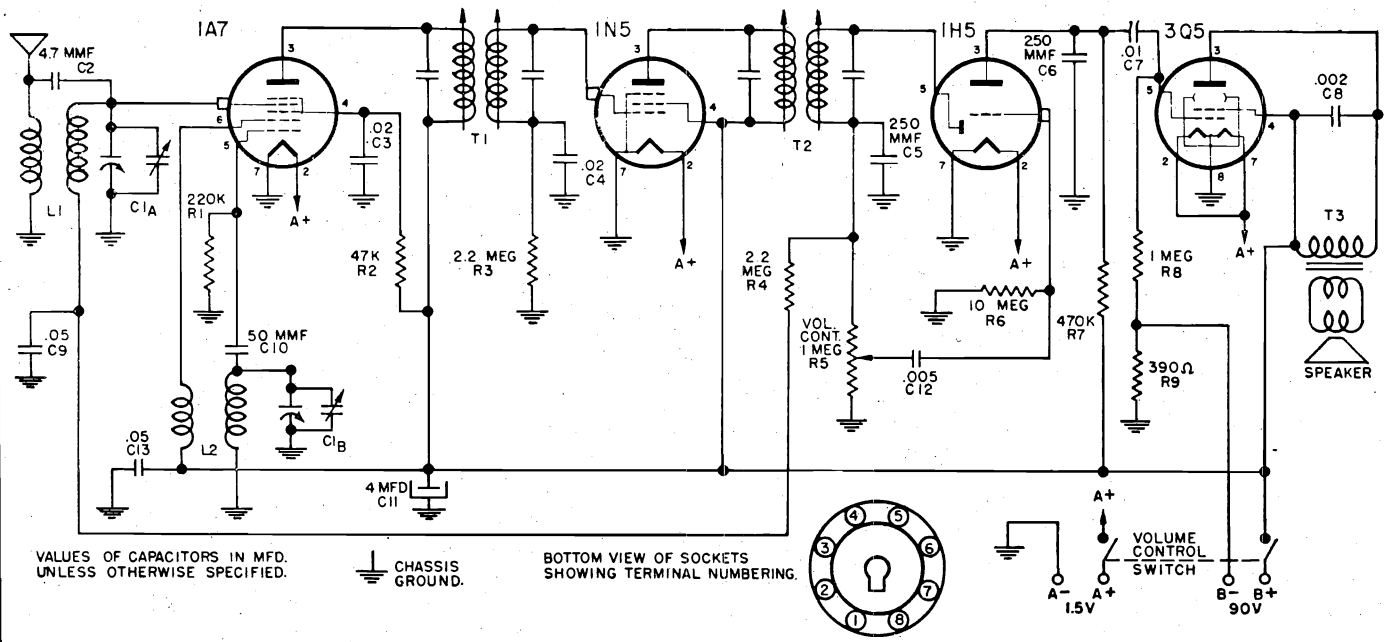

FIG. 1 SCHEMATIC DIAGRAM

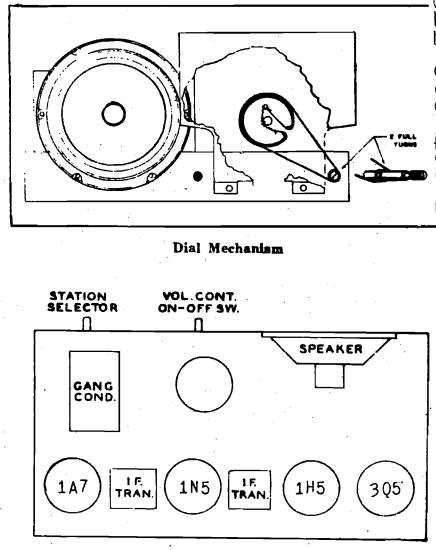

FIG. 2 TUBE AND TRIMMER LOCATIONS

HOW TO ORDER REPAIR PARTS

Always give the part No. (No. printed on the part if different from that shown on this list), and the name of the part. When number is not available give complete description of the part. Be sure to always give the Model No. and Catalog No. The Model No. will be found on either the metal plate at the rear of the chassis or on a printed label which may be found on the chassis or cabinet.

Circuit Diagram Reference	Part No.	Description
C1A, C1B	B19-188	Variable Condenser
C2	A83-355	4.7 MMFD Condenser
C3, C4	A16-150	.02 MFD 400 volt condenser
C5, C6	A15-176	250 MMFD mica condenser
C7	A16-156	.01 MFD 400 volt condenser
C8	A16-155	.002 MFD 600 volt condenser
C9, C13	A16-152	.05 MFD mica condenser
C10	A15-175	50 MMFD mica condenser
C11	A18-273	4 MFD 150 volt electrolytic condenser
C12	A16-153	.005 MFD 600 volt condenser
R1	A60-667	220K ohm ½ watt resistor
R2	A60-685	47K ohm ½ watt resistor
R3, R4	A60-684	2.2 megohm ½ watt resistor
R5	A24-170	Volume control, 1 megohm
R6	A60-663	10 megohm, ½ watt resistor
R7	A60-662	470K ohm ½ watt resistor
R8	A60-668	1 megohm ½ watt resistor
R9	A60-665	390 ohm ½ watt resistor
L1	A10-485	Antenna coil
L2	A10-505	Oscillator coil
T1, T2	A10-506	1st and 2nd I.F. transformer
T3	B80-232	Output transformer
	B79-352	Speaker, 5" P.M.
	A75-60	Tuning Shaft
	A45-118	Battery plug
	B67-515	Dial scale
	58-31	Dial pointer
	48-21	Dial crystal
	D42-437	Cabinet walnut, wood
	A52-245	Knob, walnut

© John F. Rider
Compliments of www.nucow.com

MODELS 607-RZU248, 607-RZU222

TECHNICAL INFORMATION FOR SERVICE

ALIGNMENT PROCEDURE

GENERAL DATA. The alignment of this receiver requires the use of a test oscillator that will cover the frequencies of 455, 600, 1400 and 1620 KC and an output meter to be connected across the primary or secondary of the output transformer. If possible, all alignments should be made with the volume control on maximum and the test oscillator output as low as possible to prevent the AVC from operating and giving false readings.

CORRECT ALIGNMENT PROCEDURE. The intermediate frequency (I.F.) stages should be aligned properly as the first step. After the I.F. transformers have been properly adjusted and peaked, the broadcast band should be adjusted.

I.F. ALIGNMENT. Remove the chassis and loop antenna from the cabinet and set them up on the bench so that they occupy exactly the same respective position on the bench as they did in the cabinet. Care should be taken to have no iron or other metal near the loop. Do not make this set-up on a metal bench. With the gang condenser set at minimum, adjust the test oscillator to 455 KC and connect the output to the grid of the first detector tube (12SA7) through a .05 or .1 mfd. condenser. The ground on the test oscillator should be connected to the ground buss, indicated on the circuit diagram. Align all four I.F. trimmers to peak or maximum reading on the output meter.

BROADCAST BAND ALIGNMENT. Connect the test oscillator to a dummy loop which can be made by coiling 2 turns of hookup wire about 6" in diameter. Place this dummy loop about a foot from the loop on the receiver and in the same plane as the receiver loop. With the gang condenser set at minimum capacity, set the test oscillator at 1620 KC, and adjust the oscillator (or 1620 KC trimmer) on the gang condenser. Next—set the test oscillator at 1400 KC, and tune in the signal on the gang condenser. Adjust the antenna trimmer (or 1400 KC trimmer) for maximum signal. Next set the test oscillator at 600 KC, and tune in signal on condenser to check alignment of coils.

TUBE LOCATION CHART

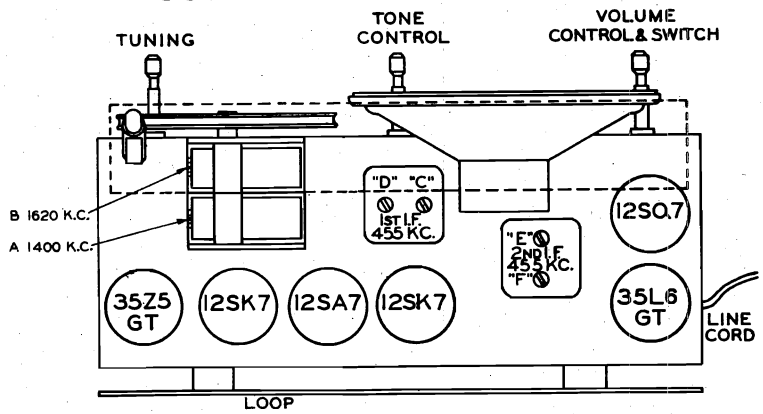

SCHEMATIC DIAGRAM AND PARTS LIST

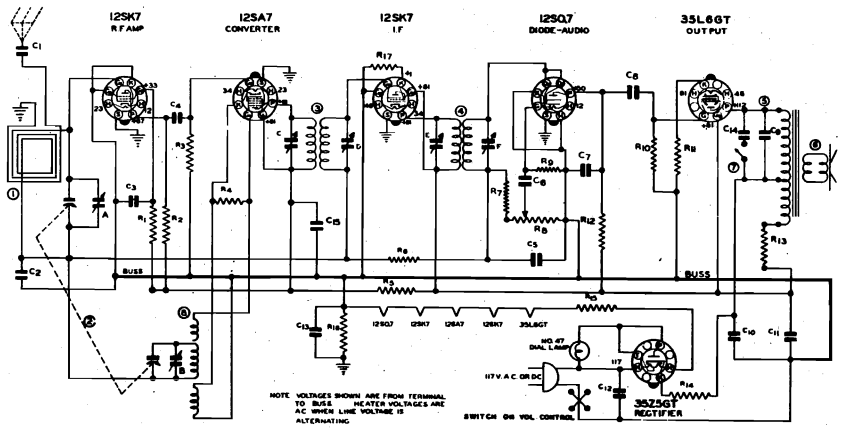

Circuit Diagram Reference	Part No.	Description
C1, C8, C9	N-1344	Condenser, Paper .01 MFD. 400V.
C2	N-1345	Condenser, Paper .05 MFD. 200V.
C4	N-2383	Condenser, Mica 150 MMFD. 500V. 20%
C5	N-1374	Condenser, Mica 100 MMFD. 500V. 20%
C6	N-4894	Condenser, Paper .005 MFD. 600V.
C7	N-4890	Condenser, Paper .0005 MFD. 600V.
C10 } C11 }	N-5051	Electrolytic { 40 MFD. 150V. } { 40 MFD. 150V. }
C12, C14	N-1346	Condenser, Paper .05 MFD. 400V.
C13	N-5160	Condenser, Paper .2 MFD. 200V.
C15	N-1351	Condenser, Paper .1 MFD. 200V.
R1, R3, R7	N-4063	Resistor 47,000 Ohm ½W. 20%
R2	N-4896	Resistor 2,200 Ohm ½W. 10%
R4	N-5351	Resistor 22,000 Ohm ½W. 20%
R5	N-4066	Resistor 470 Ohm ½W. 10%
R6	N-1262	Resistor 1.0 Megohm ½W. 20%
R8	N-5026	Resistor 0.5 Megohm Volume Control
R9	N-4061	Resistor 4.7 Megohm 0.5W. 20%
R10	N-4027	Resistor 470,000 Ohm ½W. 20%
R11	N-4067	Resistor 180 Ohm ½W. 10%
R12, R16	N-4026	Resistor 220,000 Ohm ½W. 20%
R13	N-4900	Resistor 1200 Ohm 1.0W. 10%
R14	N-4022	Resistor 33 Ohm ½W. 20%
R15	N-4628	Resistor 33 Ohm 1.0W. 10%
R17	N-5857	Resistor 82 Ohm ½W. 10%
1	N-5765	Antenna Loop Coil
2	N-7106	Variable Condenser
3	N-4872	1st I.F. Transformer
4	N-5571	2nd I.F. Transformer
5	N-4875	Output Transformer
6	N-4868	5" P.M. Speaker
7	N-4942	Tone Switch
8	N-7139	Oscillator Coil
	# 222	Cabinet — Ivory Plastic
	# 248	Cabinet — Walnut Plastic

©John F. Rider

Compliments of www.nucow.com

MODEL 610.C300,
Chevrolet

INSTALLATION

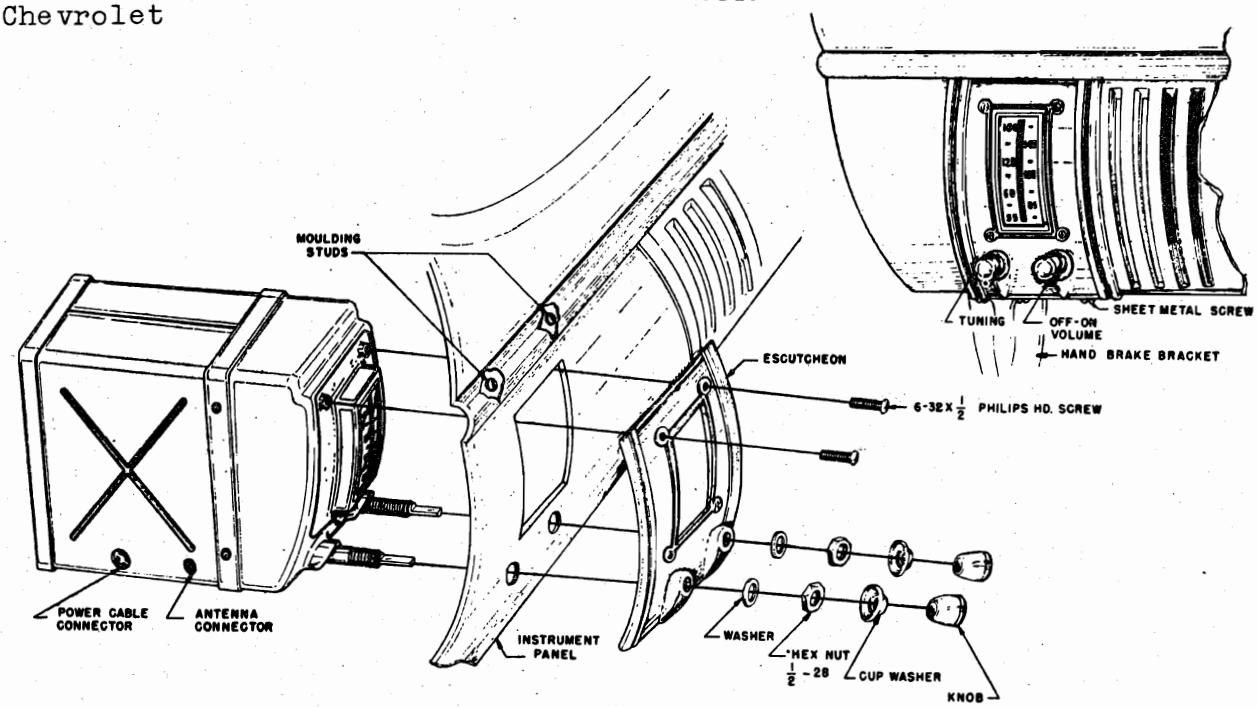

R.F. TUNING UNIT DETAIL MOUNTING ASSEMBLY

Fig. 1

R. F. TUNING UNIT

1. Loosen nuts on the two moulding studs located behind the instrument panel cover plate.
2. Remove sheet metal screw from the lower edge of the instrument panel cover plate and the two screws and washers attaching the hand brake to the instrument panel. Keep these parts.
3. Remove instrument panel cover plate and discard.
4. Tighten nuts on the two moulding studs located behind the instrument panel cover plate.
5. Drop vent controls by removing screws, lockwashers, and flat washers securing these controls to the instrument panel. This will facilitate installation of both receiver units. Save parts removed.
6. Install R.F. Tuning Unit behind instrument panel so that mounting bushings and tuning shafts protrude through the instrument panel.
7. Slide plastic escutcheon over mounting bushings and secure with flat washers, nuts, cup washers, and knobs as shown in Fig. 1
8. Secure top part of plastic escutcheon to R.F. Tuning Unit with two No. 6-32 x ½" long Philips Head screws.

POWER SUPPLY UNIT

1. Insert a thin blade screwdriver or a flat strip of metal through the Radio Grille and slit fiberboard Radio Grille screen. Reach in back of Radio Grille and remove screen by grasping slit edge. Discard fiberboard screen.
2. Remove 10-32 nuts and washers from the moulding studs behind the Radio Grille.
3. Remove 10-32 nuts, screws, and washers securing the lower tabs of the Radio Grille to the instrument panel.
4. Install Power Supply Unit behind Radio Grille and position into place so that holes in top of unit slide over moulding studs as shown in Fig. 2.

NOTE: It may be more convenient, in car models with air conditioner heaters, to remove the vibrator before installing this unit. The vibrator can be replaced after the power unit is mounted.

5. Replace 10-32 nuts and washers on moulding studs.
6. Replace lower grille tab 10-32 mounting screws, nuts, and washers so that screws secure the lower grille tabs and Power Supply Unit to the instrument panel.
7. Connect cable from Power Supply Unit to R.F. Tuning Unit.
8. Replace vent controls.
9. Replace screws and washers securing hand brake.

Connect battery lead to terminal on *Ignition Switch.*

Plug Antenna cable into receiver.

©John F. Rider

Compliments of www.nucow.com

MODEL 610.C300,
Chevrolet

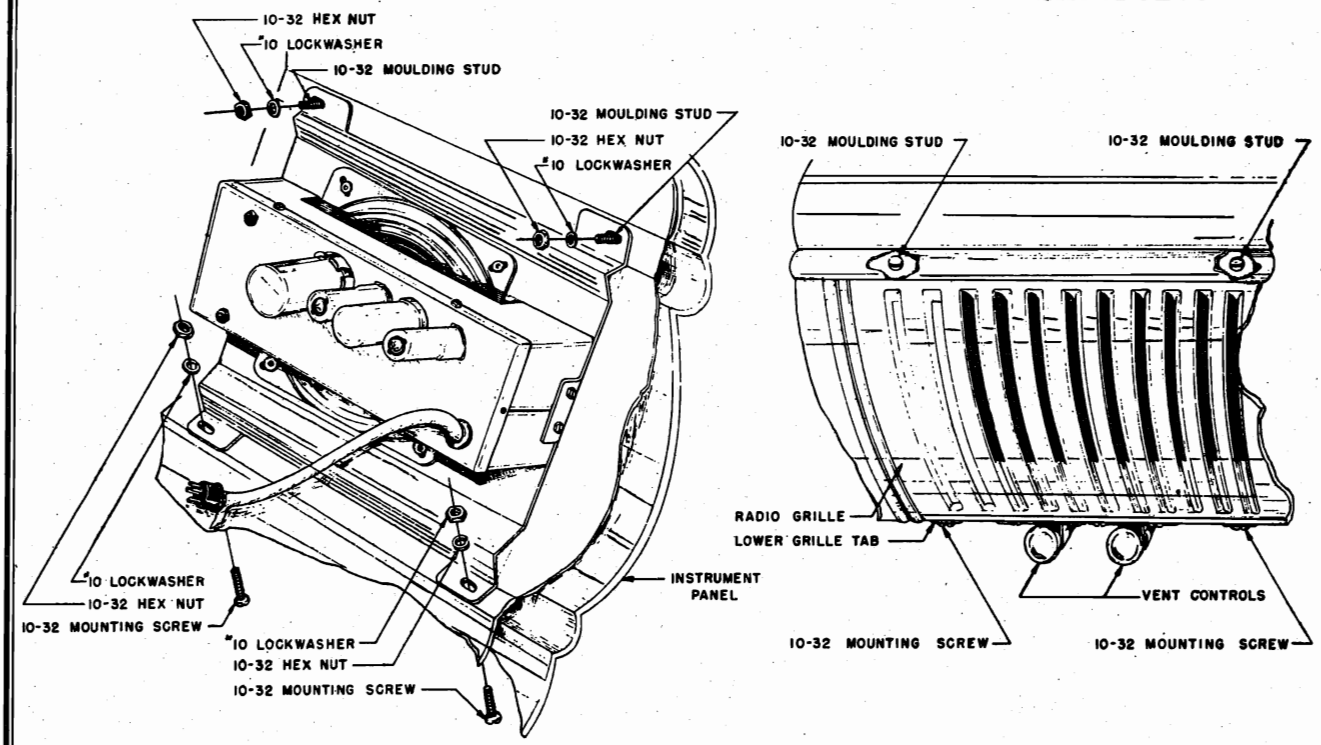

POWER SUPPLY UNIT DETAIL MOUNTING ASSEMBLY

Fig. 2

MOTOR NOISE ELIMINATION

SUPPRESSION KIT

A suppression kit is shipped with this receiver. It contains the following parts:

1 Generator Condenser.

1 Distributor Suppressor.

GENERATOR CONDENSER

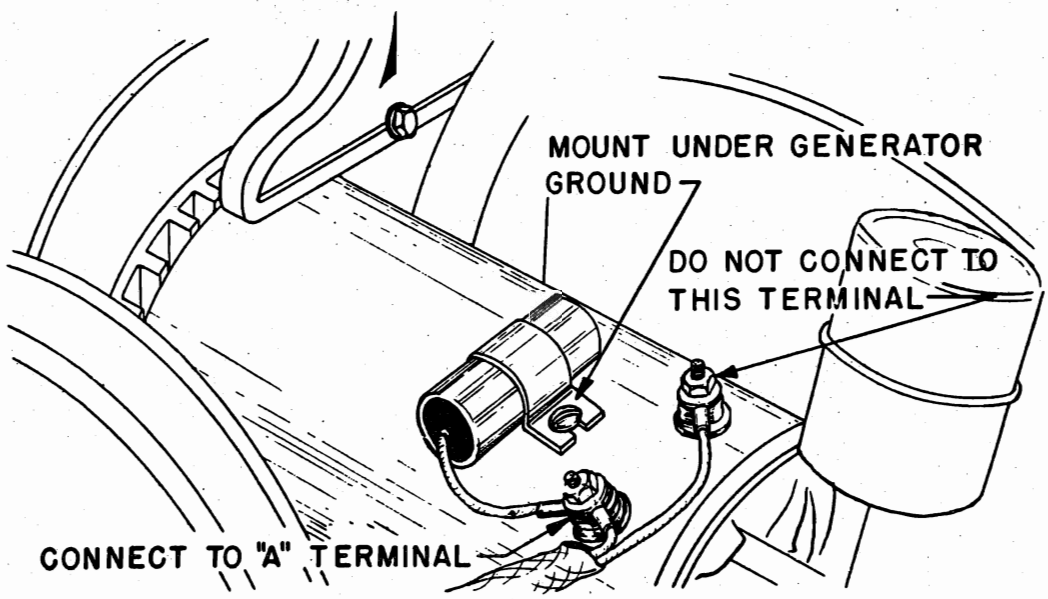

Fig. 3

©John F. Rider

Compliments of www.nucow.com

MODEL 610.C300, Chevrolet

DISTRIBUTOR SUPPRESSOR

Disconnect the center lead in the distributor head of the motor. Cut lead approximately 2 inches back from metal tip end. Screw suppressor into cut end of long lead. Screw cut end of short lead into suppressor. Plug lead, with attached suppressor, back into distributor head.

WHEEL STATIC

Wheel static is a form of interference caused by the rotation of the front wheels of the car, and it is, of course, only noticed when the car is in motion. If this form of interference is present, it can be eliminated by installing wheel static collector springs between the inner hub cap and the spindle shaft.

AMMETER CONDENSER

A .5 MFD by-pass condenser should be connected to either side of the ammeter with the ground lug fastened to a good ground nearby.

ELECTRICAL ACCESSORIES

In some cases, it may be found that car accessories such as electric heaters, lighters, automatic relays or gauges, may cause interference while in operation. Proper procedure in such cases is to connect a .5 MFD by-pass condenser from ground to the suspected accessory until the source of interference is found. The condenser then should be permanently mounted in this location.

HOW TO ORDER PARTS

Always give the part No. (No. printed on the part if different from that shown on this list), and the name of the part. When No. is not available, give complete description of part. Be sure to always give the Model No. and Catalog No. The Model No. will be found on either the metal plate at the rear of the chassis or on a printed label which may be on the chassis or cabinet.

SERVICE DATA FOR PROFESSIONAL SERVICE MEN

ELECTRICAL SPECIFICATIONS

Power Supply	6.3 Volts DC
Current	5.5 Amp. average
Frequency Range	538-1600 KC
Speaker	5¼" PM
Power Output	2 watts, undistorted 3 watts, maximum
Sensitivity	2-3 microvolts average for 1 watt output
Selectivity	40 KC broad at 1000 times signal, at 1000 KC

This receiver contains the following:
1—6BA6—RF Amplifier
1—6BE6—Converter
1—6BA6—I. F. Amplifier
1—6AT6—Detector—AVC—1st Audio
1—6AQ5—Power Output
1—6X4—Rectifier

SERVICE NOTES

Voltage taken from the different points of the circuit to the chassis are measured with volume control in maximum position, all tubes in their sockets, no signal applied, and with a volt meter having a resistance of 20,000 Ohms per volt. These voltages are clearly shown on the voltage chart, (Fig. 5).

All voltages should be measured with an input voltage of 6.3 volts DC.

To check for open by-pass condensers, shunt each condenser with another one having the same capacity and voltage rating which is known to be good until the defective unit is located.

ALIGNING INSTRUCTION

Never attempt any adjustments on this receiver unless it becomes necessary to replace a coil or transformer, or the adjustments have been tampered with in the field. Always make certain that other circuit components such as tubes, condensers, resistors, etc. are normal before proceeding with realignment.

If realignment is necessary follow the instructions given under the heading "Alignment Procedure". After realignment has been completed repeat the procedure as final check.

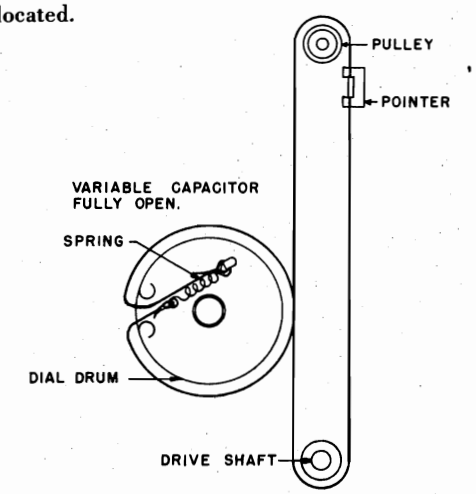

Fig. 4 DIAL CORD DRIVE (REAR VIEW)

©John F. Rider

Compliments of www.nucow.com

MODEL 610.C300,
Chevrolet

ALIGNMENT PROCEDURE

Volume control—Maximum, all adjustments.
No signal applied to antenna.
Power input—6.3 volts.
Connect dummy antenna in series with output lead of signal generator.
Connect ground lead of signal generator to chassis.
Repeat alignment procedure as a final check.

The following equipment is necessary for proper alignment:
Signal generator that will provide the test frequencies as listed, modulated 400 cycles, 30%.
Non-metallic screwdriver.
Output meter. (1.8 volt for 1 watt output.)
Dummy antennas—.1 MFD., 100 MMFD.
For alignment points refer to Schematic Diagram.

Dial Setting	*Generator Frequency*	*Dummy Ant.*	*Generator Connector*	*Trimmer Reference*	*Trimmer Adjustment*	*Trimmer Function*
1) Fully open	455 KC	.1 MFD	6BE6 Grid	T1 Top & bottom	Maximum	Output I.F.
2) Fully open	455 KC	.1 MFD	6BE6 Grid	T2 Top & bottom	Maximum	Input I.F.
3) Fully open	1600 KC	100 MMFD	Ant. lead	CV2	Maximum	Oscillator
4) Tune in signal from generator	1400 KC	100 MMFD	Ant. lead	CV3	Maximum	RF Stage
5) Tune in signal from generator	1400 KC	100 MMFD	Ant. lead	CV1	Maximum	Antenna
6) Tune in signal from generator	600 KC	100 MMFD	Ant. lead	L3	Maximum	RF Stage
7) Tune in Signal from generator	600 KC	100 MMFD	Ant. lead	L2	Maximum	Antenna

8) Repeat steps 4 and 5

BOTTOM VIEW OF CHASSIS

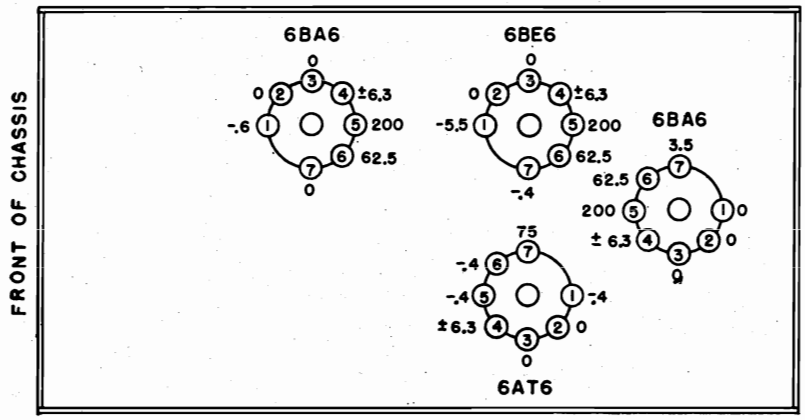

BOTTOM VIEW OF POWER PACK

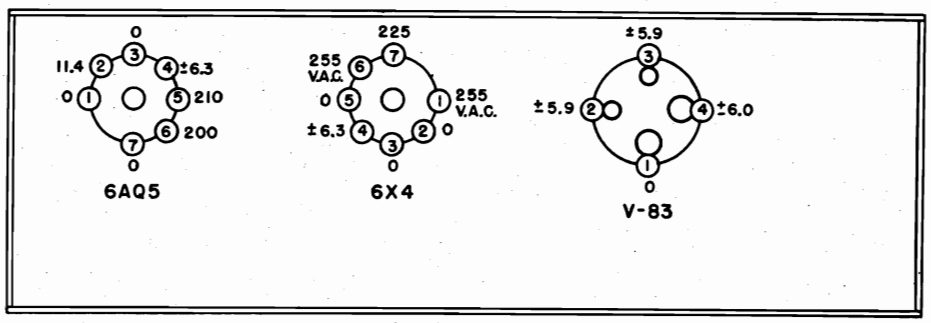

SOCKET VOLTAGES

Fig. 5

©John F. Rider

Compliments of www.nucow.com

MODEL 610.C300

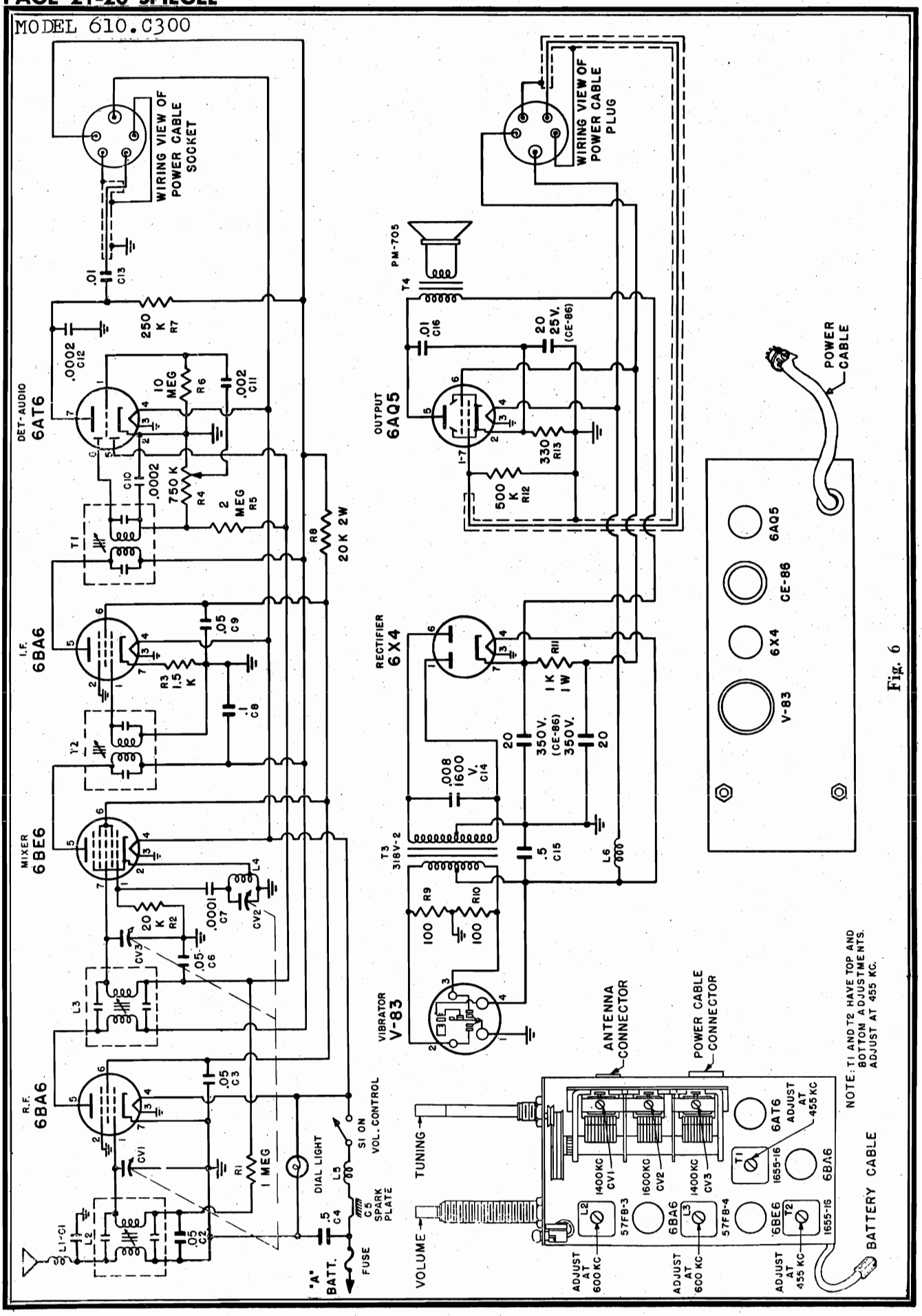

Fig. 6

©John F. Rider

Compliments of www.nucow.com

MODEL 610.C300, Chevrolet

PARTS AND PRICE LIST

CONDENSERS

Schematic Diagram Reference	Part No.	Description
C2, C3, C6, C9	C207	.05 MFD 200 volt condenser
C4, C15	C209	.5 MFD 100 volt condenser
C7	CC200	100 MMFD ceramic condenser
C8	C210	.1 MFD 400 volt condenser
C10, C12	CC201	200 MMFD ceramic condenser
C13, C16	C206	.01 MFD 600 volt condenser
C14	C205	.008 MFD 1600 volt condenser
C11	C211	.002 MFD 400 volt condenser
CE-86	CE-86	20 MFD 350 volt electrolytic condenser 20 MFD 350 volt electrolytic condenser 20 MFD 25 volt electrolytic condenser
CV1-CV2-CV3	CV-300	3 section variable tuning

RESISTORS

R1	R309	1 megohm 1/2 watt 20% resistor
R2	R306	20K ohm 1/2 watt 20% resistor
R3	R314	1.5K ohm 1/2 watt 20% resistor
R4	RV-300	Volume control 3/4 megohm with switch
R5	R310	2 megohm 1/2 watt 20% resistor
R6	R311	10 megohm 1/2 watt 20% resistor
R7	R307	250K ohm 1/2 watt 20% resistor
R8	R313	20K ohm 2 watt 20% resistor
R9, R10	R301	100 ohm 1/2 watt 20% resistor
R11	R312	1K ohm 1 watt 20% resistor
R12	R308	500K ohm 1/2 watt 20% resistor
R13	R303	330 ohm 1/2 watt 20% resistor

COILS AND TRANSFORMERS

L1-C1	L200	Motor noise elimination unit
L2	57FB-3	Antenna coil
L3	57FB-4	R.F. coil
L4	L201	R.F. oscillator coil
L5	L203	Choke, "A" line
L6	L202	Choke, vibrator hash
T1	1655-16	2nd IF transformer
T2	1655-16	1st IF transformer
T3	TV-100 or 318V-2	Vibrator transformer
T4		Output transformer (Part of speaker not furnished separately)

DIAL PARTS

D300	Dial Scale
PS300	Dial Pointer
DS300	Drive Shaft Assembly
H201	Grommet, rubber drive
T51	Pilot Light
H214	Pilot Light Socket
H203	Pulley, idler
H204	Spring, Dial drive String Tension
H215	String, dial drive

MISCELLANEOUS

A300	"A" lead assembly
H301	Case, less covers for Power Supply Unit
H300	Case, complete with covers for R.F. tuning unit
H207	Clip, Anti-rattle
H208	Clip, coil mounting
H302	Cover, power supply unit mounting (with speaker louvres)
A201	Fuse 15 Amp.
504PC-300	Power Cable Assembly (complete with plug)
H212	Receptacle, Antenna cable
504-FC	Socket, power cable
PM-705	Speaker, 5 1/4" PM (includes output transformer)
V-83	Vibrator
H310	Knob
H311	Cup washer
H312	Plastic Escutcheon

©John F. Rider

Compliments of www.nucow.com

MODEL 610.D200,
Plymouth, Dodge

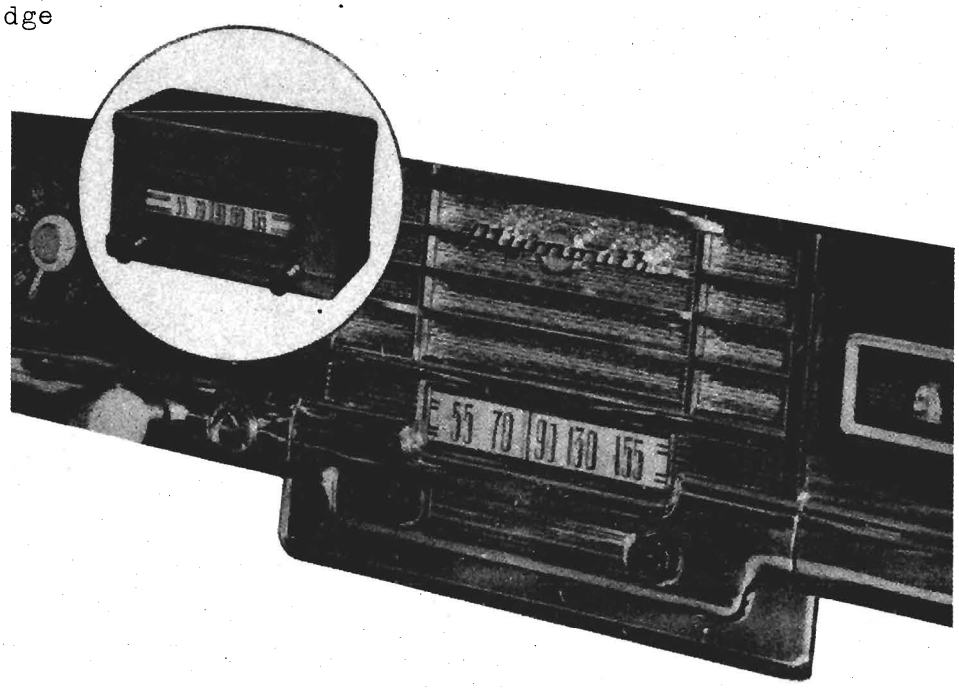

INSTALLATION

PLYMOUTH P18 SPECIAL DELUXE

1. Remove four screws securing Radio Grill in place and remove Radio Grill.
2. Remove dummy plates covering radio dial and control openings.
3. Enlarge holes in radio control cover plate to ½ inch.
4. Remove knobs, cup washers, hex nuts and washers from control shafts and mounting bushings.
5. Secure two mounting brackets to Radio Grill with ⅜ inch long 10-32 self-tapping screws and cup washers as shown in detail assembly drawing.
6. Place radio control cover plate over mounting bushings.
7. Position receiver behind Radio Grill so that mounting bushings and shafts protrude through the grill.
8. Attach receiver by replacing washers and hex nuts on mounting bushings.
9. Replace cup washers and knobs over shafts.
10. Secure receiver to mounting brackets with two No. 8 self-tapping wing nuts.
11. Insert radio with attached grill through front opening on instrument panel.
12. Replace grill mounting screws.
13. Connect battery lead to terminal marked "ACC" on ignition switch.
14. Plug antenna cable into receiver.

DODGE "CORONET"

Install in the same manner as outlined for the P18 DeLuxe Plymouth except do not remove radio grill.

PLYMOUTH P17, P18 4-DOOR DELUXE AND P18 CLUB COUPE DELUXE DODGE "WAYFARER" AND "MEADOWBROOK"

These models are not equipped by the car manufacturers with a radio grill or a radio control cover plate.

The following parts must be obtained from any authorized Plymouth or Dodge dealer before an installation can be made in any of these cars.

Plymouth P17, P18 4-Door DeLuxe, P18 Club Coupe DeLuxe
- Radio Grill No. 1299913
- Radio control cover No. 1248700

Dodge "Meadowbrook" or "Wayfarer"
- Radio Grill No. 1301360
- Radio control cover No. 1255080

© John F. Rider

Compliments of www.nucow.com

MODEL 610.D200,
Plymouth, Dodge

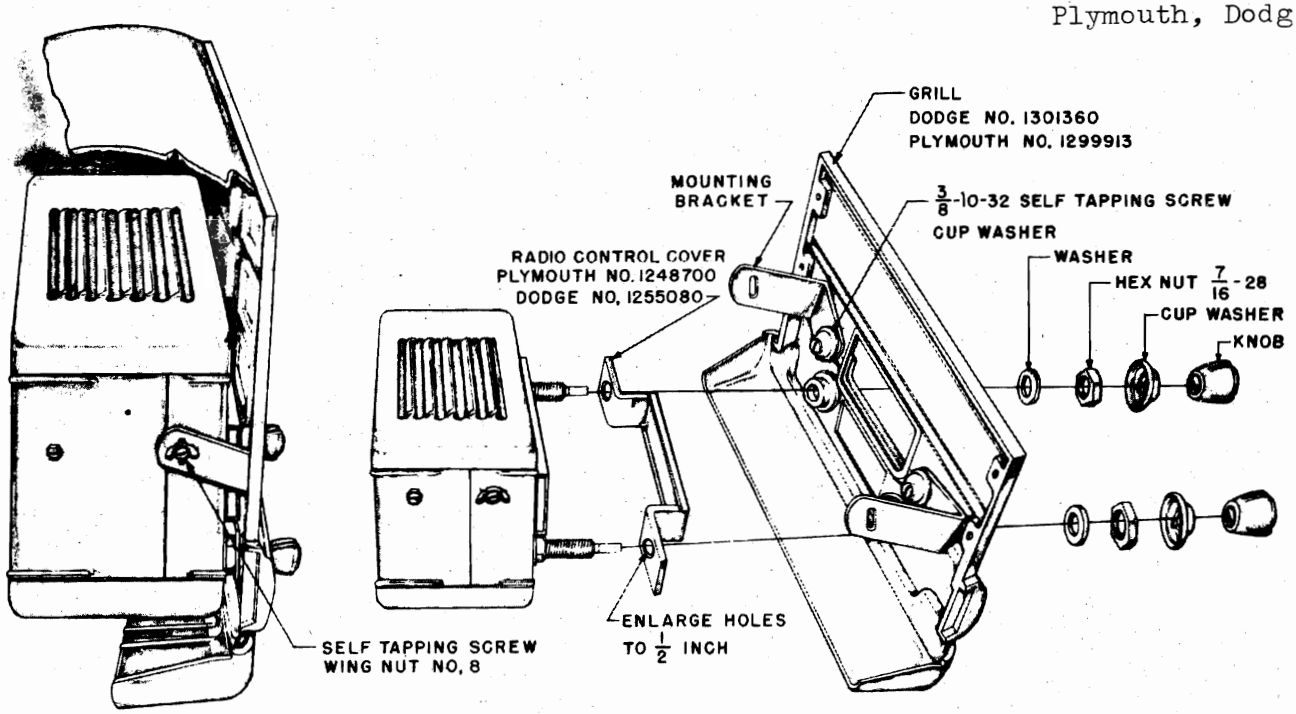

ACCESSORIES FURNISHED FOR INSTALLATION

MOUNTING PARTS KIT

The following mounting hardware parts are shipped attached to the receiver.
(See detail assembly drawing FIG. 2)

2 Washers
2 $\frac{7}{16}$-28 hex nuts
2 Cup washers
2 Knobs
2 Mounting Brackets
2 No. 8 self-tapping wing nut screws

An envelope containing additional mounting hardware is supplied with this receiver. It contains the following parts:

2 $\frac{3}{8}$ 10-32 self-tapping screws
2 Cup washers

SUPPRESSION KIT

1 Distributor Suppressor
1 .5 MFD Generator Condenser

MOTOR NOISE ELIMINATION

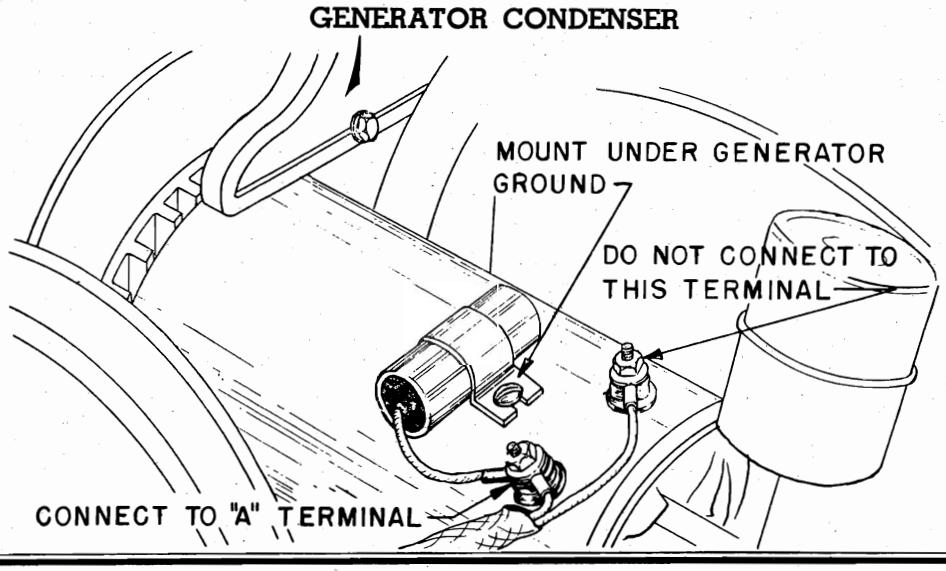

©John F. Rider

Compliments of www.nucow.com

MODEL 610.D200,
Plymouth, Dodge

DISTRIBUTOR SUPPRESSOR

NOTE: 1950 Dodge and Plymouth automobiles do *not* require distributor suppressors.

1949 DODGE AND PLYMOUTH

Remove metal tip from the distributor center tower lead and screw lead into the suppressor. Plug suppressor with attached lead back into distributor head.
The generator condenser and distributor suppressor should eliminate all objectionable motor noise in most cases. If the motor noise persists the following steps should be taken. Check operation of radio as each step is made.

WHEEL STATIC

Wheel static is a form of interference caused by the rotation of the front wheels of the car, and it is, of course, only noticed when the car is in motion. If this form of interference is present, it can be eliminated by installing wheel static collector springs between the inner hub cap and the spindle shaft.

AMMETER CONDENSER

A .5 MFD by-pass condenser should be connected to either side of the ammeter with the ground lug fastened to a good ground nearby.

ELECTRICAL ACCESSORIES

In some cases, it may be found that car accessories such as electric heaters, lighters, automatic relays or gauges, may cause interference while in operation. Proper procedure in such cases is to connect a .5 MFD by-pass condenser from ground to the suspected accessory until the source of interference is found. The condenser then should be permanently mounted in this location.

ALIGNMENT PROCEDURE

Volume control—Maximum, all adjustments.
No signal applied to antenna.
Power input—6.3 volts.
Connect dummy antenna in series with output lead of signal generator.
Connect ground lead of signal generator to chassis.
Repeat alignment procedure as a final check.

The following equipment is necessary to proper alignment:
Signal generator that will provide the test frequencies as listed, modulated 400 cycles, 30%.
Non-metallic screwdriver.
Output meter. (1.8 volt for 1 watt output.)
Dummy antennas—.1 MFD., 100 MMFD.
For alignment points refer to *Schematic Diagram*

Dial Setting	*Generator Frequency*	*Dummy Ant.*	*Generator Connector*	*Trimmer Reference*	*Trimmer Adjustment*	*Trimmer Function*
1) Fully open	455 KC	.1 MFD	6BE6 Grid	T4 Top & bottom	Maximum	Output I.F.
2) Fully open	455 KC	.1 MFD	6BE6 Grid	T3 Top & bottom	Maximum	Input I.F.
3) Fully open	1600 KC	100 MMFD	Ant. lead	CV2	Maximum	Oscillator
4) Tune in signal from generator	1400 KC	100 MMFD	Ant. lead	CV3	Maximum	RF Stage
5) Tune in signal from generator	1400 KC	100 MMFD	Ant. lead	CV1	Maximum	Antenna
6) Tune in signal from generator	600 KC	100 MMFD	Ant. lead	T2	Maximum	RF Stage
7) Tune in Signal from generator	600 KC	100 MMFD	Ant. lead	T1	Maximum	Antenna

8) Repeat steps 4 and 5

HOW TO ORDER REPAIR PARTS

Always give the part No. (No. printed on the part if different from that shown on this list), and the name of the part. When No. is not available, give complete description of part. Be sure to always give the Model No. and Catalog No. The Model No. will be found on either the metal plate at the rear of the chassis or on a printed label which may be on the chassis or cabinet.

©John F. Rider

Compliments of www.nucow.com

MODEL 610.D200, Plymouth, Dodge

PARTS AND PRICE LIST

CONDENSERS

Schematic Diagram Reference	Part No.	Description
C2, C3, C4	C207	.05 MFD 200 volt condenser
C5	CC200	100 MMFD ceramic condenser
C6, C13, C14	CC201	200 MMFD ceramic condenser
C7	C203	.002 MFD 200 volt condenser
C8, C9	C206	.01 MFD 600 volt condenser
C10, C11	C209	.5 MFD 100 volt condenser
C12	C205	.008 MFD 1600 volt condenser
CE-86	CE-86	20 MFD 350 volt electrolytic condenser 20 MFD 350 volt electrolytic condenser 20 MFD 25 volt electrolytic condenser
CV-200	CV-200	3 section variable tuning condenser

RESISTORS

R1	R309	1 megohm ½ watt 20% resistor
R2	R306	20K ohm ½ watt 20% resistor
R3	R305	2K ohm ½ watt 20% resistor
R4	R310	2 megohm ½ watt 20% resistor
R5	R311	10 megohm ½ watt 20% resistor
R6	R307	250K ohm ½ watt 20% resistor
R7	R308	500K ohm ½ watt 20% resistor
R8	R303	330 ohm ½ watt 20% resistor
R9	R313	20K ohm 2 watt 20% resistor
R10, R11	R301	100 ohm ½ watt 20% resistor
R12	R312	1K ohm 1 watt 20% resistor
RV-200	RV-200	Volume control ¾ megohm with switch

COILS AND TRANSFORMERS

L1-C1	L200	Motor noise elimination unit
L2	57FB-3	Antenna Coil
L3	57FB-4	RF coil
L4	L201	RF Oscillator coil
L5	L202	Choke, vibrator hash
L6	L203	Choke, "A" line
T1	1655-16	1st IF transformer
T2	1655-16	2nd IF transformer
T3		Output transformer (Part of speaker not furnished separately)
T4	TV-200	Vibrator transformer

DIAL PARTS

D200	Dial Scale
PS200	Dial Pointer
DS200	Drive shaft assembly
H201	Grommet, rubber drive
T51	Pilot light
H202	Pilot light socket
H203	Pulley, idler
H204	Spring, Dial Drive Spring Tension
H205	String

MISCELLANEOUS

A200	"A" lead assembly
H206	Case (less covers)
H207	Clip, anti-rattle
H208	Clip, coil mounting
H209	Cover, bottom case
H210	Cover, top case (with speaker louvres)
A201	Fuse, 15 Amp.
H211	Grommet, rubber, gang mounting
H212	Receptacle, antenna cable
PM-200	Speaker 4" x 6" PM (includes output transformer)
V-83	Vibrator

©John F. Rider

Compliments of www.nucow.com

MODEL 610.
D200, Dodge,
Plymouth

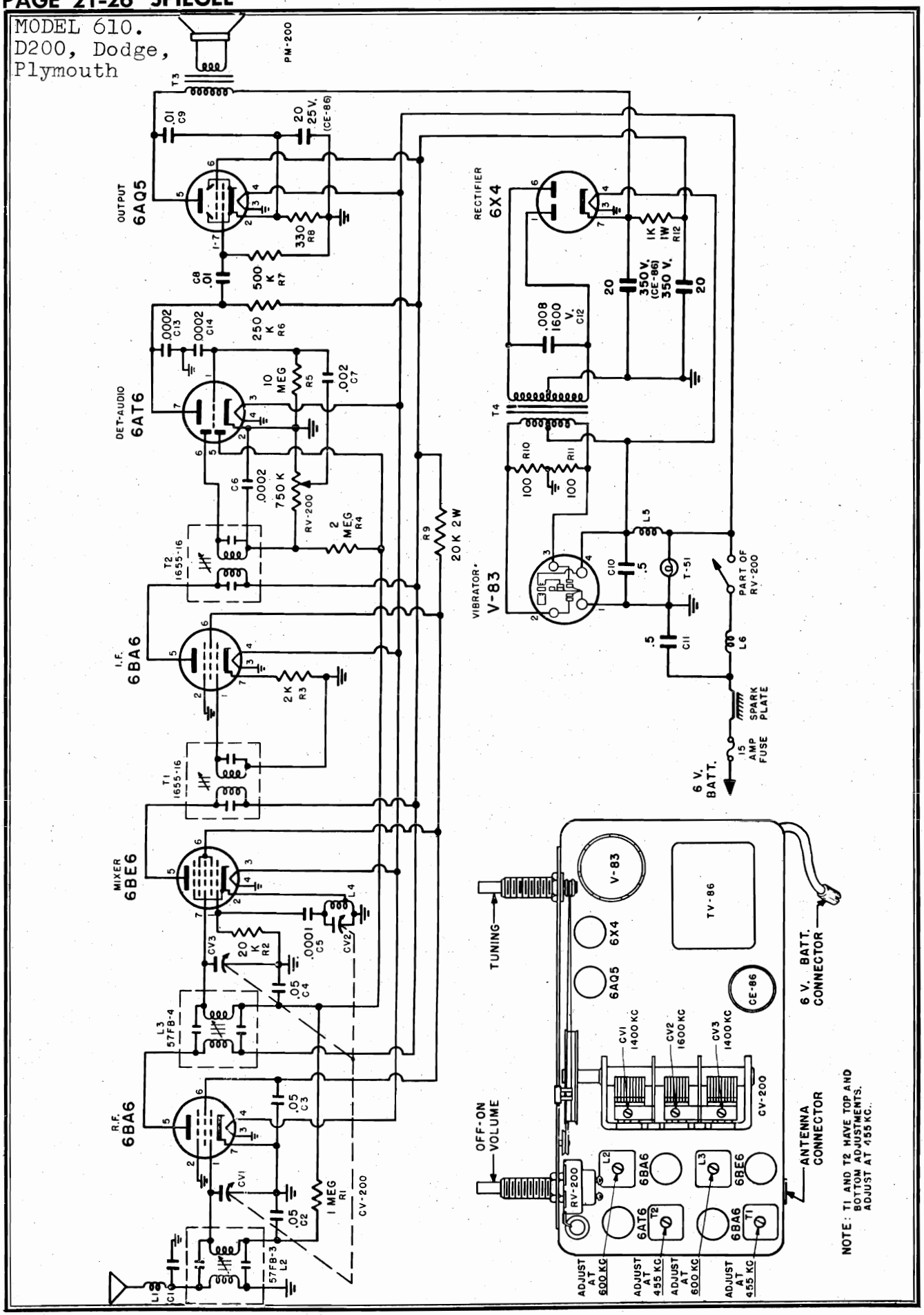

©John F. Rider

Compliments of www.nucow.com

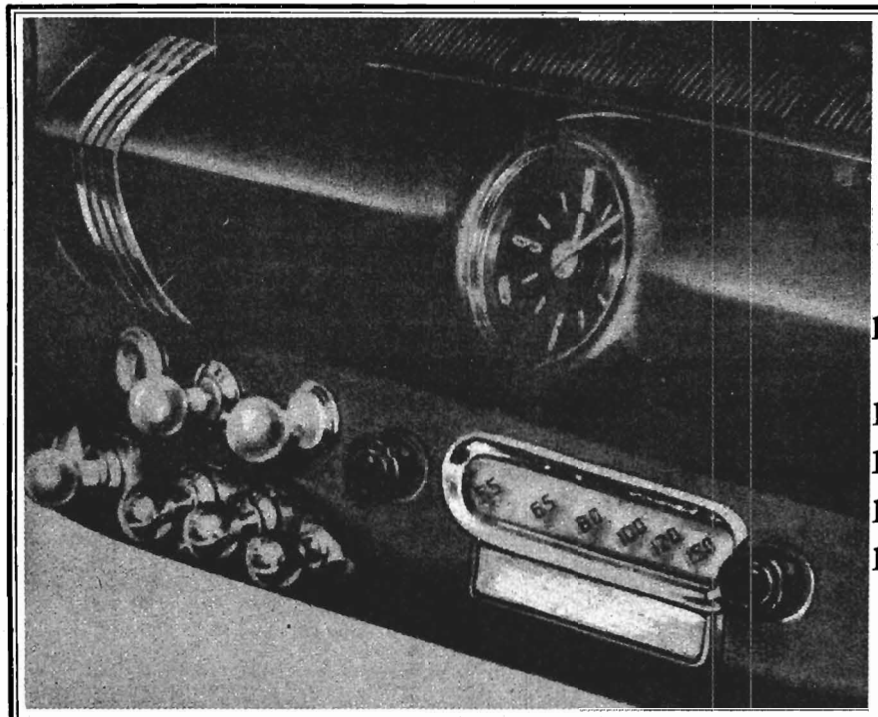

INSTALLATION

1. Remove two speed nuts securing radio opening cover plate to instrument panel.
2. Remove cover plate.
3. Place speaker and power pack unit over four threaded stud bolts located on the underside of the instrument panel. (Position power pack unit so that power cable is located on the right hand side.) See Fig. 1.
4. Secure power pack into position with four 8-32 wing nuts supplied in kit of mounting hardware.
5. Remove knobs, cup washers and hex mounting nuts from tuning unit. *Do not remove* escutcheon.
6. Place tuning unit behind instrument panel so that mounting bushings and shafts protrude through the front panel.
7. Attach tuning unit with a hex nut on each mounting bushing.
8. Replace cup washers and knobs over shafts.
9. Secure a supporting bracket (2 supplied in kit of hardware) to each side of the power pack unit by means of two No. 8 self tapping screws. Use end of supporting bracket with round hole. If more convenient, these brackets may be attached before power pack unit is positioned in place.
10. Swing supporting brackets so that slotted holes are in line with the holes on each side of the tuning unit.
11. Secure to tuning unit with two No. 8 self tapping screws.
12. Insert power cable plug into socket on rear of tuning unit.
13. Plug antenna cable into tuning unit.
14. Connect "A" lead to accessory terminal marked RAD. GA, on the ignition switch.

PARTS AND PRICE LIST

SCHEMATIC DIAGRAM, REFERENCE	PART NO.	DESCRIPTION
		CONDENSERS
C2, C3, C6, C9	C207	.05 MFD 200 volt condenser
C4, C15	C209	.5 MFD 100 volt condenser
C7	CC200	100 MMFD ceramic condenser
C8	C210	.1 MFD 400 volt condenser
C10, C12	CC201	200 MMFD ceramic condenser
C13, C16	C206	.01 MFD 600 volt condenser
C14	C205	.008 MFD 1600 volt condenser
CE-86	CE-86	20 MFD 350 volt electrolytic conden.
		20 MFD 350 volt electrolytic conden.
		20 MFD 25 volt electrolytic conden.
CV-300	CV-300	3 section variable tuning
		RESISTORS
R1	R309	1 megohm ½ watt 20% resistor
R2	R306	20 K ohm ½ watt 20% resistor
R3	R314	1.5 K ohm ½ watt 20% resistor
R4	RV-300	Volume control 3/4 megohm with switch
R5	R310	2 megohm ½ watt 20% resistor
R6	R311	10 megohm ½ watt 20% resistor
R7	R307	250 K ohm ½ watt 20% resistor
R8	R313	20K ohm 2 watt 20% resistor
R9, R10	R301	100 ohm ½ watt 20% resistor
R11	R312	1K ohm 1 watt 20% resistor
R12	R308	500K ohm ½ watt 20% resistor
R13	R303	330 ohm ½ watt 20% resistor

©John F. Rider
Compliments of www.nucow.com

COILS AND TRANSFORMERS

L1-C1	L200	Motor noise elimination unit
L2	57FB-3	Antenna coil
L3	57FB-4	R.F. coil
L4	L201	R.F. oscillator coil
L5	L203	Choke, "A" line
L6	L202	Choke, vibrator hash
T1	1655-16	1st IF transformer
T2	1655-16	2nd IF transformer
T3	TV100 or	Vibrator transformer
	318V-2	Output transformer (Part of speaker not furnished separately)

DIAL PARTS

F-100	Dial Scale
PS-800	Dial Pointer

H201	Grommet, rubber drive
T51	Pilot Light
H214	Pilot Light Socket
H203	Pulley, idler
H204	Spring, Dial drive String Tension
H215	String, dial drive

MISCELLANEOUS

A100	"A" lead assembly
H101	Case, less covers for Power Supply Unit
H100	Case, complete with covers for R.F. tuning unit
H207	Clip, Anti-rattle
H208	Clip, coil mounting
H102	Cover, power supply unit mounting (with speaker louvres)
A201	Fuse 15 Amp.
504PC-100	Power Cable Assembly (complete with plug)
H212	Receptacle, Antenna cable
504-FC	Socket, power cable
PM-705	Speaker, 5¼" PM (includes output transformer)
V-83	Vibrator

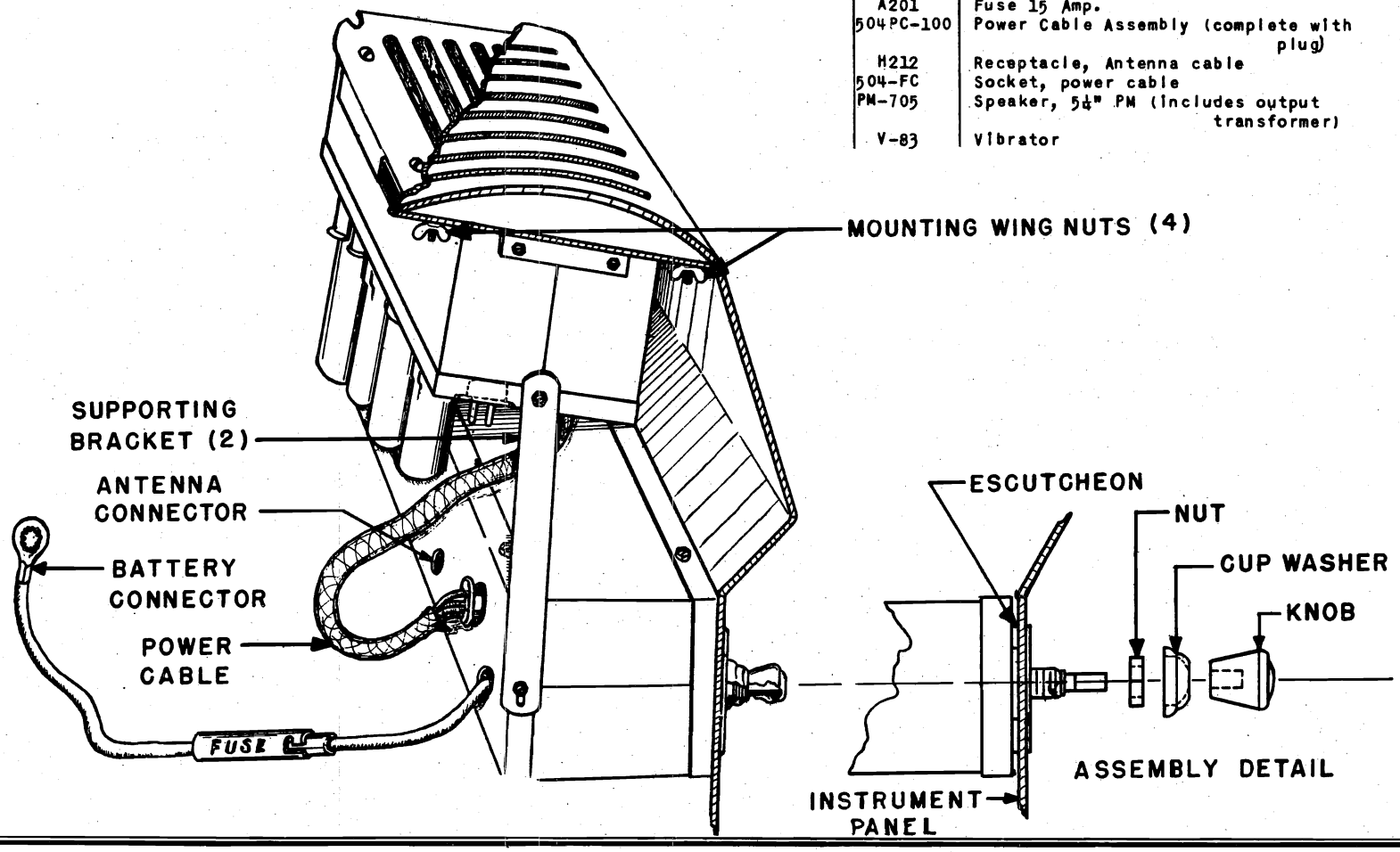

©John F. Rider
Compliments of www.nucow.com

MODEL 610.F100,
Ford

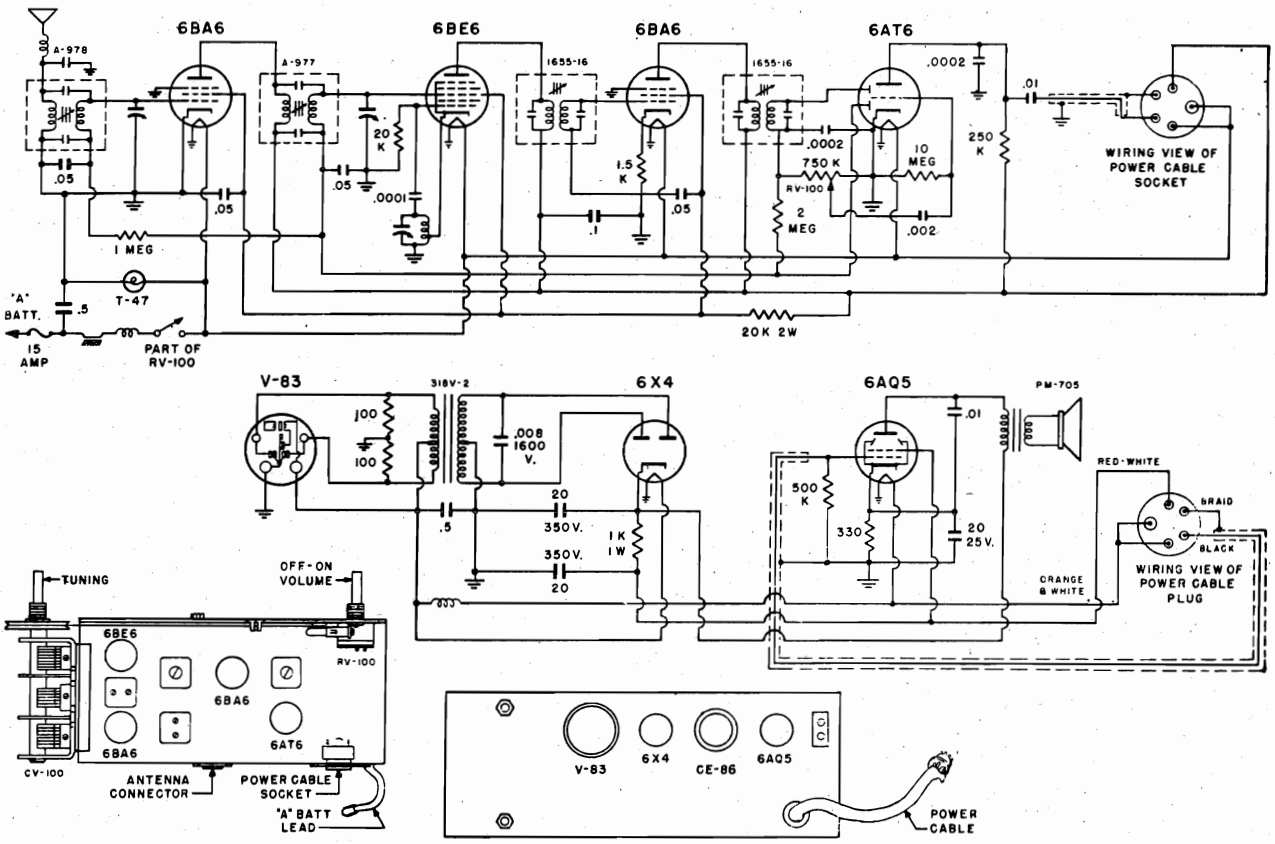

ALIGNMENT PROCEDURE

Volume control— Maximum, all adjustments.
No signal applied to antenna.
Power input—6.3 volts.
Connect dummy antenna in series with output lead of signal generator.
Connect ground lead of signal generator to chassis.
Repeat alignment procedure as a final check.

The following equipment is necessary for proper alignment:
Signal generator that will provide the test frequencies as listed, modulated 400 cycles, 30%.
Non-metallic screwdriver.
Output meter. (1.8 volt for 1 watt output.)
Dummy antennas—.1 MFD., 100 MMFD.
For alignment points refer to Schematic Diagram.

Dial Setting	*Generator Frequency*	*Dummy Ant.*	*Generator Connector*	*Trimmer Reference*	*Trimmer Adjustment*	*Trimmer Function*
1) Fully open	455 KC	.1 MFD	6BE6 Grid	T2 Top & bottom	Maximum	Output I.F.
2) Fully open	455 KC	.1 MFD	6BE6 Grid	T1 Top & bottom	Maximum	Input I.F.
3) Fully open	1600 KC	100 MMFD	Ant. lead	CV2	Maximum	Oscillator
4) Tune in signal from generator	1400 KC	100 MMFD	Ant. lead	CV3	Maximum	RF Stage
5) Tune in signal from generator	1400 KC	100 MMFD	Ant. lead	CV1	Maximum	Antenna
6) Tune in signal from generator	600 KC	100 MMFD	Ant. lead	L3	Maximum	RF Stage
7) Tune in Signal from generator	600 KC	100 MMFD	Ant. lead	L2	Maximum	Antenna
8) Repeat steps 4 and 5						

©John F. Rider

Compliments of www.nucow.com

TECHNICAL INFORMATION FOR SERVICE

ALIGNMENT PROCEDURE

I. F. Alignment

1. Set variable condenser to high frequency end of dial.
2. Connect suitable output meter to voice coil of speaker.
3. Connect signal generator to grid of BE6 through .05 condenser. Connect ground side of generator to B-.
4. Adjust trimmers A and B for maximum output at 455 Kc.
5. Repeat trimmer adjustment for peak sensitivity.

R. F. Alignment

1. Set variable condenser to extreme high frequency end of dial.
2. Connect signal generator to antenna input terminal on antenna coil through 50 mmf. condenser.
3. Set generator to 1720 Kc.
4. Set trimmer C to 1720 Kc.
5. Set generator to 1400 Kc. and tune receiver dial to maximum response.
6. Adjust trimmer D for maximum output at 1400 Kc.
7. Check tracking and make necessary compensations.

TUBE LOCATION CHART
MODEL 9012

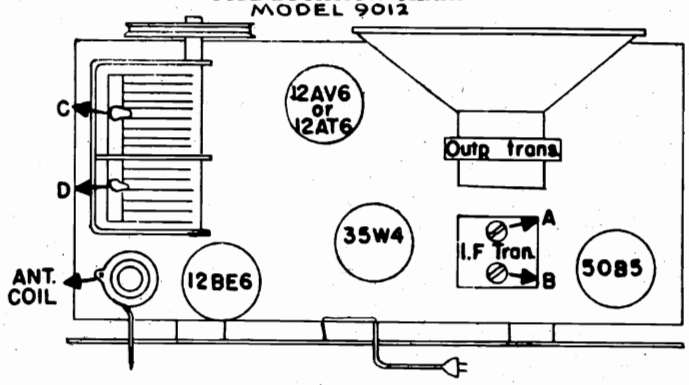

CIR. SYM.	PART NO.	DESCRIPTION
R1	RC-31002	RESISTOR CARBON 10,000 Ohm 1/2 W
R2	RC-32204	" " 2.2 MEG Ohm 1/2 W
R3	VC-12106-E	VOLUME CONTROL 1 MEG WITH SWITCH
R4	RC-31005	RESISTOR CARBON 10 MEG Ohm 1/2 W
R5, 6	RC-34703	" " 470,000 Ohm 1/2 W
R7	RC-31500	" " 150 Ohm 1/2 W
R8	RC-40220	" " 22 Ohm 1 W
R9	RC-31001	" " 1000 Ohm 1/2 W
T1	TS-10039	TRANSFORMER I.F.
T2	SR-10007	TRANSFORMER OUTPUT & SPEAKER
R10	RC-40470	RESISTOR CARBON 47 Ohm— 1 W

CIR. SYM.	PART NO.	DESCRIPTION
C1	CP-12203	CONDENSER PAPER .02 MFD 200 V.
C2	CM-25251	" MICA 250 MMF
C3,4	CP-12502	" PAPER .005 MFD 200 V.
C5	CP-14103	" PAPER .01 MFD 400 V.
C6,8	CP-12503	" PAPER .05 MFD 200 V.
C7	CL-10017	" ELECT. 30/20 MFD 150 V.
C9A-B	CV-10018A	" VARIABLE
L1	TRF-10018	ANTENNA COIL
L2	TRC-10017	OSCILLATOR COIL, 5 LUG

CHASSIS MODEL 9012

PARTS LIST

	PART	DESCRIPTION
C7	CLP-10017	Cond. electrolytic, 30-20 mfd. 150 V.
C2	CMP-15251	Cond. mica, .00025 mfd. 500 V.
C1	CPP-12203	Capacitor paper tubular .02 mfd. 200 V.D.C.
C3,4	CPP-12502	Capacitor paper tubular .005 mfd. 200 V (D.C.)
C6,8	CPP-12503	Capacitor paper tubular .05 mfd. 200 V (D.C.)
C5	CPP-14103	Capacitor paper tubular .01 mfd. 400
C9A-B	CVP-100018A	Condenser variable, osc. 162 19 plates, 450 mfd.
R4	RC-31005	Resistor carbon 10 meg, ½ watt
R1	RC-31002	Resistor carbon 10,000 ohm, ½ watt
R7	RC-31500	Resistor carbon 150 ohm, ½ watt
R2	RC-32204	Resistor carbon 2.2 meg, ½ watt, 20%
R5,6	RC-34703	Resistor carbon 470,000 ohm, ½ watt, 20%
R8	RC-40220	Resistor carbon 22 ohm, 1 watt
R9	RC-31001	Resistor carbon 1000 ohm, ½ watt
R10	RC-40470	Resistor carbon 47 ohm, 1 watt 20%
T2	SRP-10007	Speaker, 3 inch transformer mounted
L2	TRC-10017	Oscillator coil, 5 lug
L1	TRF-10018	Antenna coil
T1	TS-10039	I.F. transformer (automatic No. 1455-11)
R3	VC-12106E	Volume control with switch 1 meg-¼ inch shaft
	XC-10020	Back cover plate, cardboard, non-waxed
	DS-10112	Dial scale and nameplate
	HF-1003	Washer, white felt ¼ inch I.D.x5/80. D.x1/16 thick
	HX-10027	"T" fastner (to fit .150 hole)
	K-10036W	Knob, set screw Ivory or Walnut
	K-10042W	Knob push-on with pointer Ivory or Walnut
	ZP-10025WorU	Cabinet

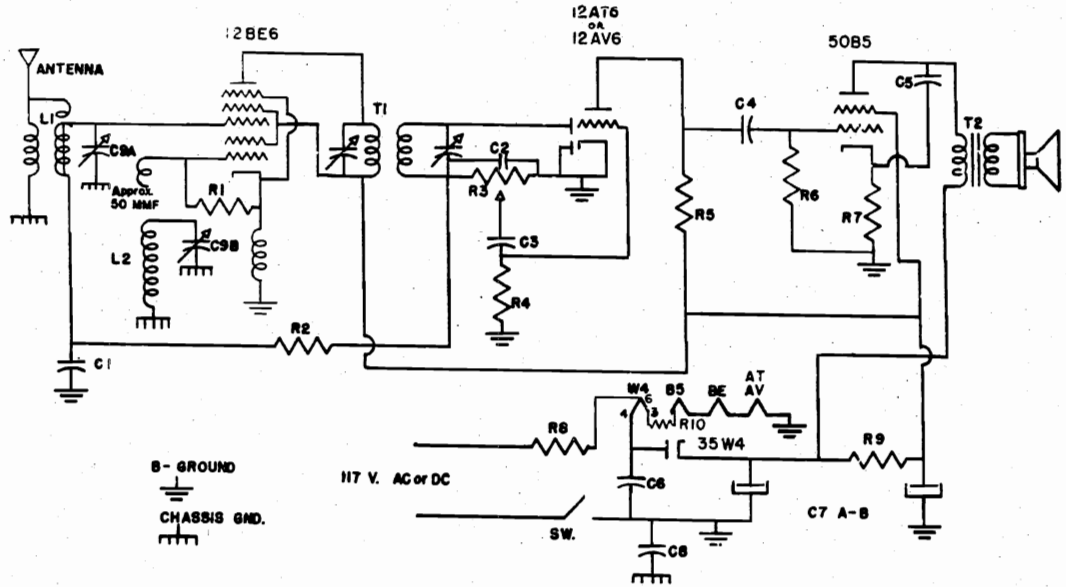

©John F. Rider

Compliments of www.nucow.com

MODEL 159144

INSTALLATION

This radio comes to you complete with all hardware necessary for mounting, and also with a distributor suppressor, ammeter condenser and generator condenser. By referring to Figures 1 and 2, and following the instructions outlined below, you will find that it is very simple to install.

First determine where the receiver is to be mounted by holding it with the hands in the approximate location in the car. Using the front mounting bracket as a template, mark and drill two 5/8" holes in the instrument panel flange. Now secure the mounting bracket to the radio receiver with the screws provided, and then mount the front of the radio to the instrument panel, using the bolts, lock washers and nuts provided for this purpose. The back of the radio is supported by means of the rear mounting strap. The mounting strap should be formed to the correct angles, as illustrated in Figure 2, so that it can then be fastened to the fire wall. After marking and center-punching the fire wall at the correct location, drill with a 3/8" drill. The mounting strap is then secured to the radio and fastened to the fire wall of the car with the 1/4" bolt, lock washer and nut furnished with the receiver.

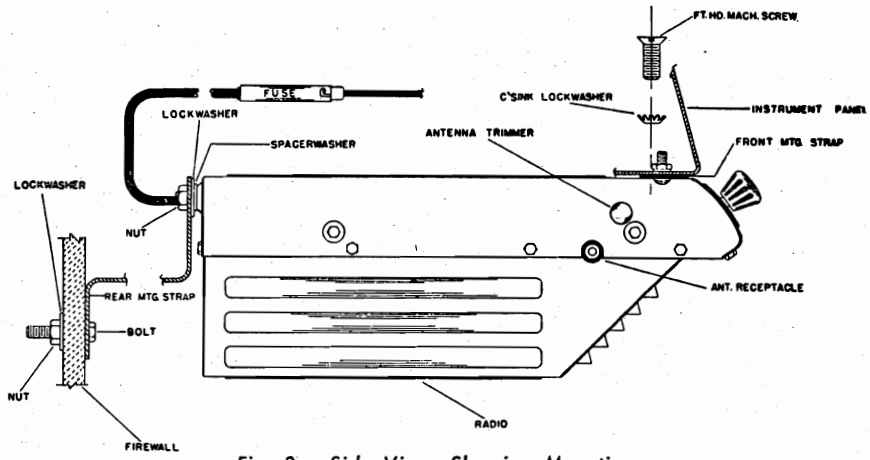

Fig. 3. Side View, Showing Mounting

CONNECTING THE RADIO

The antenna cable should be connected to the radio by inserting the jack into the socket provided on the side of the radio. Connect the battery cable to the hot side of the ammeter behind the instrument panel. The fuse should then be inserted into the cable receptor.

FINAL ADJUSTMENTS

The input circuit has been especially designed to be used with a low capacity antenna, of the fish pole or whip type.

To adjust the antenna trimmer condenser, carefully tune the receiver to a weak station at approximately 1100 kilocycles (K.C.). Remove the snap button covering the antenna trimmer (See Figure 3) and adjust the trimmer for maximum volume. A small screw driver will be needed for this purpose.

ACCESSORIES FURNISHED FOR INSTALLATION

All of the parts that are needed for installing this receiver are furnished in the Mounting Parts Kit, part No. S84-192, and the Suppression & Misc. Parts Kit, part No. S84-344, as listed below. Also supplied are the rear mounting strap, part No. B31-134, and the front mounting plate, part No. A31-148.

NOTE: For shipping, the two control knobs have been removed from the tuning and volume control shafts. To install the knobs, line up the flat side of the knob spring, (inside knob) with the flat side of the control shaft and push the knob forward until it stops.

S84-192 MOUNTING PARTS KIT

- 1 1/4" Bolt
- 2 1/4" Lock Washers
- 2 1/4" Hexagon Nuts
- 2 10-32 x 5/8" Screws
- 2 External Tooth Lock Washers
- 2 Internal Tooth Lock Washers
- 2 10-32 Hexagon Nuts

S84-344 SUPPRESSION KIT & MISC. PARTS ASSEMBLY

1—S84-233	"A" lead assembly
1—A43-10	Fuse
2—A52-295	Control knobs
1—A81-13	Sleeve (for fuse)
1—S84-193	Suppression Kit consisting of:
	2—.5 MFD Condensers
	1—Distributor Suppressor
	20"—Wire Braid

©John F. Rider

Compliments of www.nucow.com

MODEL 159144

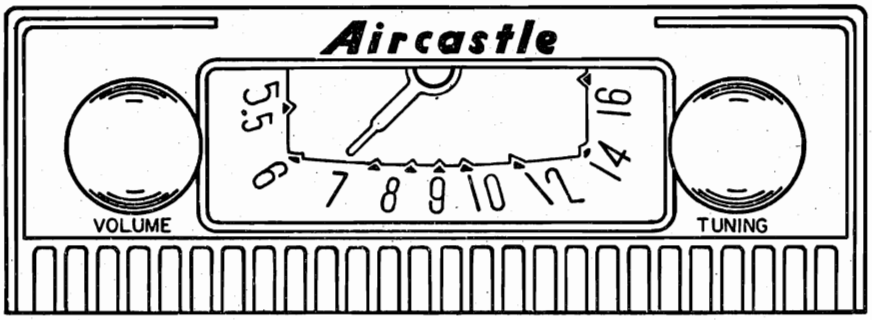

Fig. 1 Front View

SUGGESTIONS FOR ELIMINATING POSSIBLE MOTOR NOISE

IMPORTANT: Special care should be taken when mounting the radio to make sure all paint, grease, rust, etc., is removed from all three mounting points. A good electrical contact at these points will aid materially in eliminating motor noise. (The following steps may not be necessary in all cases. Install your radio and operate it before making changes.)

GENERATOR CONDENSER

The generator condenser must be connected to the battery terminal of the generator in all cases. If your car is equipped with a generator using an automatic regulator, make sure the condenser IS NOT fastened to the field winding terminal. If in doubt, your local car dealer can advise you as to where the car manufacturer recommends connecting it.

AMMETER CONDENSER

A .5 MFD bypass condenser is furnished for attaching to the ammeter. This should be connected to either side of the ammeter with the ground lug fastened to a good ground nearby. In most cases the use of this condenser, the distributor suppressor, and the generator condenser, will eliminate all objectionable ignition interference.

DISTRIBUTOR SUPPRESSOR

Detach the high tension wire where it goes into the top of the distributor cap and cut two inches off the end. Screw the piece you cut off into one end of the distributor suppressor and then screw the other end of the suppressor on the long wire which leads to the coil. Insert the wire back into the distributor cap.

IGNITION COILS

In cars where the ignition coil is located on the back side of the instrument panel it is often necessary to use an additional .5 MFD condenser. It must be installed from the battery side of the ignition coil to the closest ground on the instrument panel.

Short wires are very important. Where coils are mounted either on the instrument panel or in the driver's compartment, it may be necessary to shield the high tension wire from the coil to the distributor.

HIGH AND LOW TENSION WIRES

In many cases the low tension battery leads, etc., are grouped together with the high tension wires. These wires will very often pick up motor noise and feed it into the receiver through the battery circuit. In cases such as these it will be necessary to separate the low tension from the high tension wires and run them through another hole if they run from the engine compartment up to the instrument panel. These wires should be placed in a flexible wire shield and the shield grounded to frame or motor. This condition is particularly true on the V-8 Ford, as the battery and primary leads run through a special tube which also houses the high tension wires.

BONDING OF FIRE WALL

Bonding the steering column to the fire wall with a short braid may also be effective. Clean the paint from the steering column at the fire wall where the column enters the motor compartment, and solder on a short piece of braid. Ground the end of the braid to the fire wall.

In some cases it may be necessary to ground the tubes and rods coming through the fire wall in order to reduce the interference. Clean them with emery cloth and spot-solder the braid, fastening the end under a convenient screw. A 1/4" piece of wire braid 20 inches long is furnished in the suppression kit assembly for this purpose.

WHEEL STATIC

Wheel Static is a form of interference caused by the rotation of the front wheels of the car, and it is, of course, only noticed when the car is in motion. If this form of interference is present it can be eliminated by installing wheel static collector springs between the inner hub cap and the spindle shaft.

ELECTRICAL ACCESSORIES

In some cases it may be found that car accessories such as electric heaters, lighters, automatic relays, or gauges, may cause interference while in operation. Proper procedure in such cases is to connect a .5 MFD by-pass condenser from ground to the suspected accessory until the source of the interference is found. The condenser then should be permanently mounted in this location.

© John F. Rider

Compliments of www.nucow.com

MODEL 159144

ELECTRICAL SPECIFICATIONS

Power Supply.....6.3 volts DC
Current .....5.5 amp. average
Frequency Range.....540 to 1600 KC
I. F. Frequency.....455 KC
Speaker.....4" P. M.
Power Output.....1.2 watts, undistorted
2.5 watts, maximum
Sensitivity.....10 microvolts average for 1 watt output
Selectivity...40 KC broad at 1000 times signal, at 1000 KC

This receiver contains the following:

1—6SK7GT—R. F. Amplifier.

1—6SA7GT—Converter.

1—6SK7GT—I.F. Amplifier.

1—6SQ7—Detector—AVC—1st audio.

1—6V6GT—Power output.

1—6X5GT—Rectifier.

SERVICE NOTES

Voltages taken from the different points of the circuit to the chassis are measured with volume control in maximum position, all tubes in their sockets, no signal applied, and with a volt meter having a resistance of 20,000 ohms per volt. These voltages are clearly shown on the voltage chart, (Fig. 4).

All voltages should be measured with an input voltage of 6.3 volts DC.

To check for open by-pass condensers, shunt each condenser with another one having the same capacity and voltage rating which is known to be good until the defective unit is located.

ALIGNING INSTRUCTION

Never attempt any adjustments on this receiver unless it becomes necessary to replace a coil or transformer, or the adjustments have been tampered with in the field. Always make certain that other circuit components, such as tubes, condensers, resistors, etc., are normal before proceeding with realignment.

If realignment is necessary follow the instructions given under the heading "ALIGNMENT PROCEDURE". After realignment has been completed repeat the procedure as a final check.

INSTRUCTIONS FOR REMOVING CHASSIS FROM THE CASE

The bottom cover (the one with the speaker louvers) can be removed to permit servicing of major components, such as tubes and vibrator, by removing the eight (8) screws holding it to the top cover. There are three (3) screws on each side, one (1) in the rear, and one (1) in the front.

CAUTION: Before attempting to remove the top cover, to service condensers, resistors, etc., the screw connecting the spark plate to the "A" terminal (inside case) must be removed. This is a round head screw, and is located on the rear of the case, close to the mounting stud bolt. It is recessed in a ½ inch hole in the case itself, thereby permitting contact with the spark plate.

After removing the spark plate screw, remove the two knobs by pulling forward and remove the eight (8) screws securing the cover to the chassis. Lift the chassis at the rear, at the same time moving it away from the front of the case so that the volume and tuning shafts will clear the holes in the cover.

NOTE: When reinstalling the chassis into the case, be sure the screw connecting the spark plate to the "A" terminal (inside case) is tightened very securely, otherwise the receiver will not operate properly.

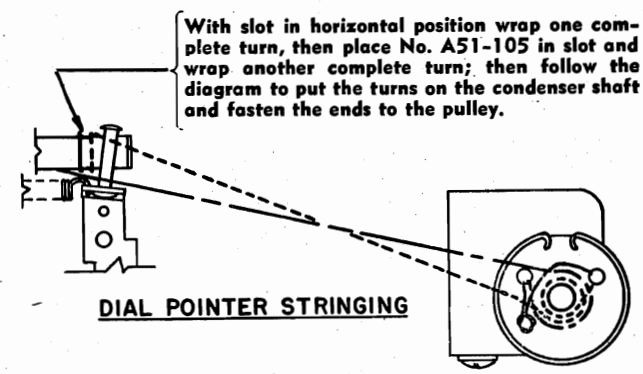

DIAL POINTER STRINGING

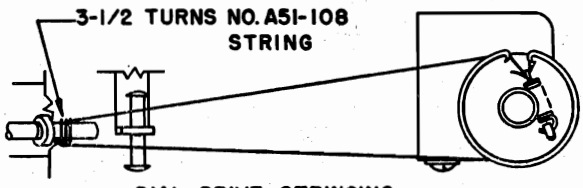

DIAL DRIVE STRINGING

©John F. Rider

Compliments of www.nucow.com

MODEL 159144

ALIGNMENT PROCEDURE

Volume control—Maximum, all adjustments.

No signal applied to antenna.

Power input—6.3 volts.

Connect dummy antenna in series with output lead of signal generator.

Connect output meter across voice coil.

Connect ground lead of signal generator to chassis.

Repeat alignment procedure as a final check.

The following equipment is necessary for proper alignment:

Signal generator that will provide the test frequencies as listed, modulated 400 cycles, 30%.

Non-metallic screwdriver.

Output meter. (1.8 volt for 1 watt output.)

Dummy antennas—.1 MFD., 75 MMFD.

For alignment points refer to Figures 5 and 6.

Dial Setting	Generator Frequency	Dummy Ant.	Generator Connections	Trimmer Reference	Trimmer Adjustment	Trimmer Function
Fully Open	455 KC	.1 MFD.	6SA7 Grid	T2	Maximum	Output I.F.
Fully Open	455 KC	.1 MFD.	6SA7 Grid	T1	Maximum	Input I.F.
Fully Open	455 KC	75 MMFD.	Ant. lead	L3	Minimum	Wave trap
Fully Open	1600 KC	75 MMFD.	Ant. lead	C1B	Maximum	Oscillator
Tune in signal from generator	1400 KC	75 MMFD.	Ant. lead	C19	Maximum	Antenna

NOTE: The antenna trimmer condenser, C3, (see Fig. 2) should be adjusted after the radio is installed in the car. Tune the receiver to a weak station at about 1100 KC and adjust this trimmer for maximum volume.

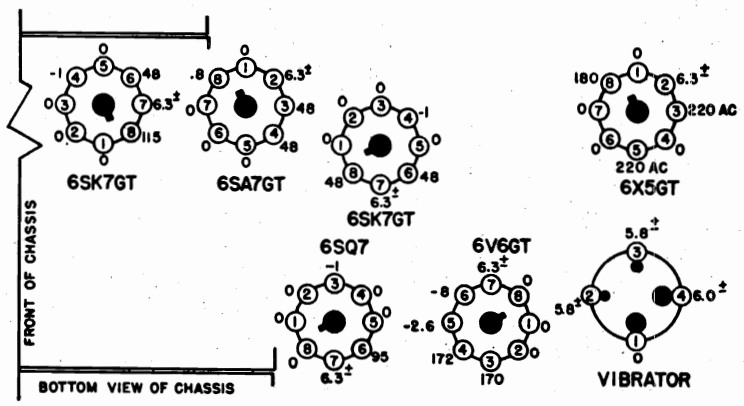

Fig. 4 Socket Voltages

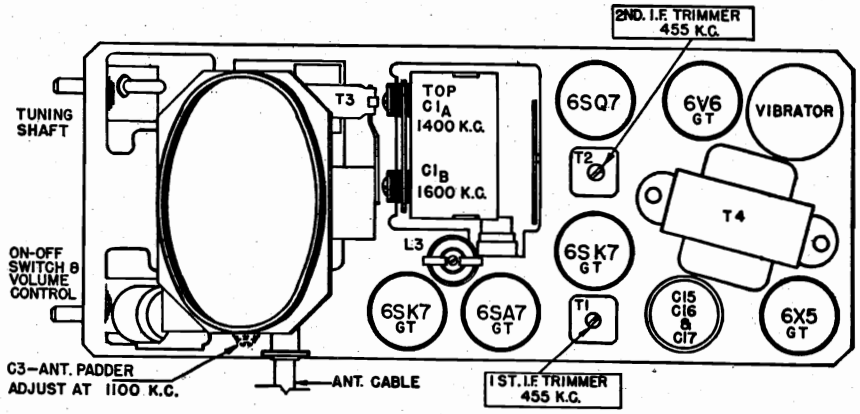

Fig. 5 Tube, Rectifier, and Trimmer Locations

©John F. Rider

Compliments of www.nucow.com

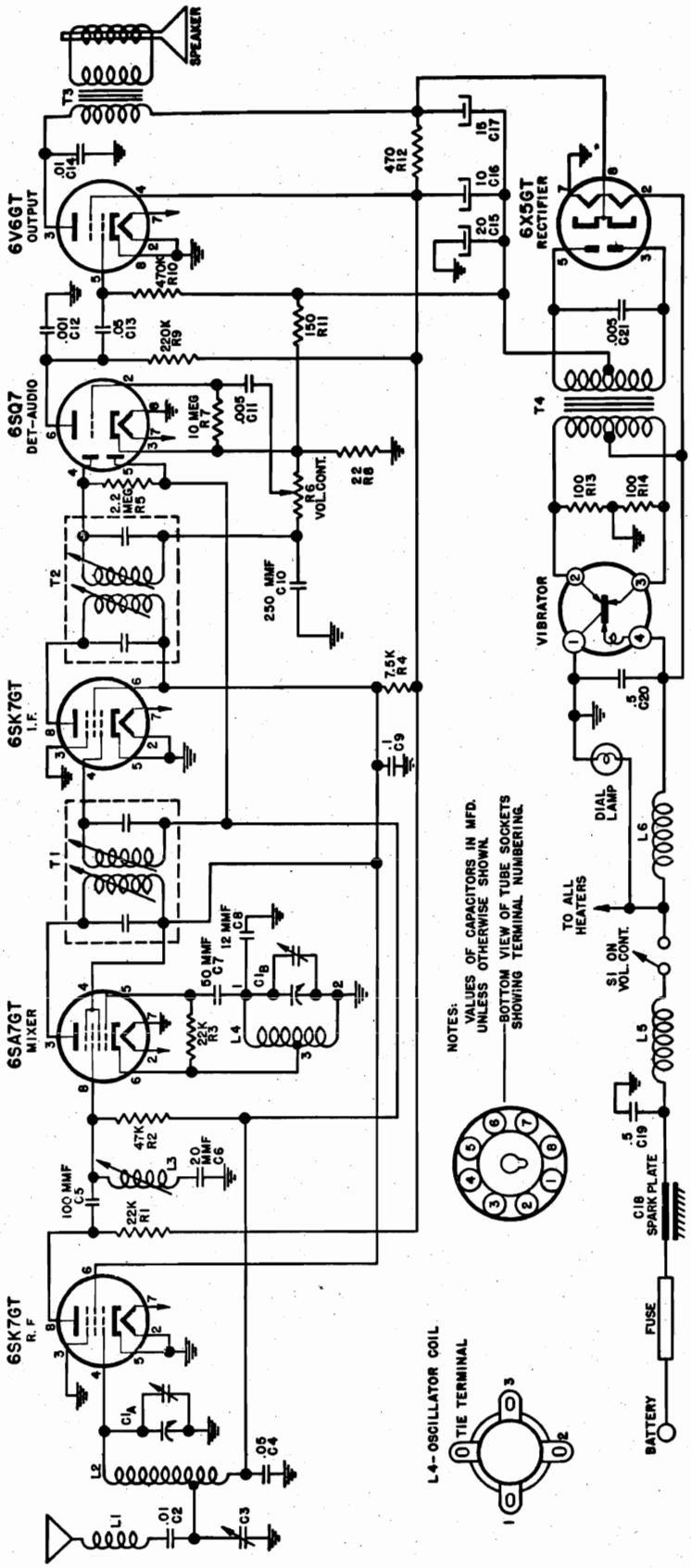

Fig. 3 Schematic Diagram

©John F. Rider

Compliments of www.nucow.com

MODEL 159144

Schematic Diagram Reference	Part No.	Description
		CONDENSERS
C1A, C1B	A19-201	Variable condenser
C2, C14	A16-192	.01 MFD 400 volt condenser
C3	A20-145	Trimmer condenser
C4	A16-189	.05 MFD 400 volt condenser
C5	A15-196	100 MMFD ceramic condenser
C6	A15-202	20 MMFD ceramic condenser
C7	A15-204	50 MMFD ceramic condenser
C8	A15-205	12 MMFD ceramic condenser, temp. comp.
C9	A16-187	.1 MFD 400 volt condenser
C10	A15-176	250 MMFD mica condenser
C11	A16-190	.005 MFD 600 volt condenser
C12	A16-195	.001 MFD ceramic condenser
C13	A16-193	.05 MFD 600 volt condenser
C15	A18-293	20 MFD 25 volt electrolytic condenser
C16		10 MFD 350 volt electrolytic condenser
C17		15 MFD 350 volt electrolytic condenser
C19, C20	A16-184	.5 MFD 100 volt condenser
C21	A16-185	.005 MFD 1600 volt oil filled condenser
		RESISTORS
R1, R3	A60-659	22K ohm ½ watt 20% resistor
R2	A60-685	47K ohm ½ watt 20% resistor
R4	A60-769	7.5K ohm 2 watt 10% resistor
R5	A60-726	2.2 megohm ½ watt 20% resistor
R6	A24-177	Volume control, 500,000 ohm, with switch
R7	A60-728	10 megohm ½ watt 20% resistor
R8	A60-768	22 ohm ½ watt 10% resistor
R9	A60-667	220K ohm ½ watt 20% resistor
R10	A60-731	470K ohm ½ watt 20% resistor
R11	A60-767	150 ohm ½ watt 10% resistor
R12	A60-770	470 ohm ½ watt 10% resistor
R13, R14	A60-752	100 ohm ½ watt 10% resistor
		COILS AND TRANSFORMERS
L1	A10-527	Antenna Loading Coil
L2	B10-511	Antenna Coil
L3	A10-510	I.F. Trap Coil
L4	A10-512	Oscillator Coil
L5	A33-229	Choke, "A" Line
L6	A33-228	Choke, vibrator hash
T1	A10-508	1st I.F. Transformer
T2	A10-509	2nd I.F. Transformer
T3	B80-242	Output Transformer (Part of Speaker, not furnished separately)
T4	B80-243	Power transformer
		DIAL PARTS
	A11-303	Bracket, Dial Scale
	B11-328	Bracket, String Guide
	A72-29	Bushing, Tuning Shaft Bearing
	A70-130	Clip, Spring, for Tuning Shaft
	A40-146	Dial Escutcheon
	A58-55	Dial Pointer
	B67-544	Dial Scale
	A28-101	Gasket for Speaker
	A52-295	Knob
	A11-329	Link, String Guide
	A89-10	Pilot Light, Type G.E. No. 422
	A65-37	Rivet, Shoulder, for Dial Pointer Stringing
	A65-41	Rivet, Shoulder, for String Guide Brkt. and Link
	A65-12	Rivet, Shoulder, for Dial Drive Stringing
	A75-70	Shaft, tuning
	A75-74	Shaft, for Dial Pointer
	A70-132	Spring, for Pilot Light Socket
	A70-133	Spring, Dial Drive String Tension
	A70-142	Spring, Pointer Drive String Tension
	A51-105	String, Pointer Travel, 17"
	A51-108	String, Condenser Drive, 19"
		MISCELLANEOUS
	S84-233	"A" lead assembly
	A83-421	Clip, I.F. Transformer Mounting
	A83-517	Clip, Oscillator Coil Mounting
	A43-10	Fuse, 15 Amp.
	A47-112	Grommet, rubber, (Spkr. & Gang mounting)
	B31-134	Mounting strap, rear
	B31-148	Mounting Plate, Front
	S84-192	Mounting parts kit
	A87-38	Receptacle, Antenna Cable
	B79-362	Speaker, 4" P.M. (includes Output Transformer)
	S84-193	Suppression Kit Assembly
	A34-105	Vibrator
	A83-519	Wiper, grounding, for case covers

Note: Tubular condensers must be high temperature (85°C) wax type.

©John F. Rider

Compliments of www.nucow.com

MODEL 9150-B

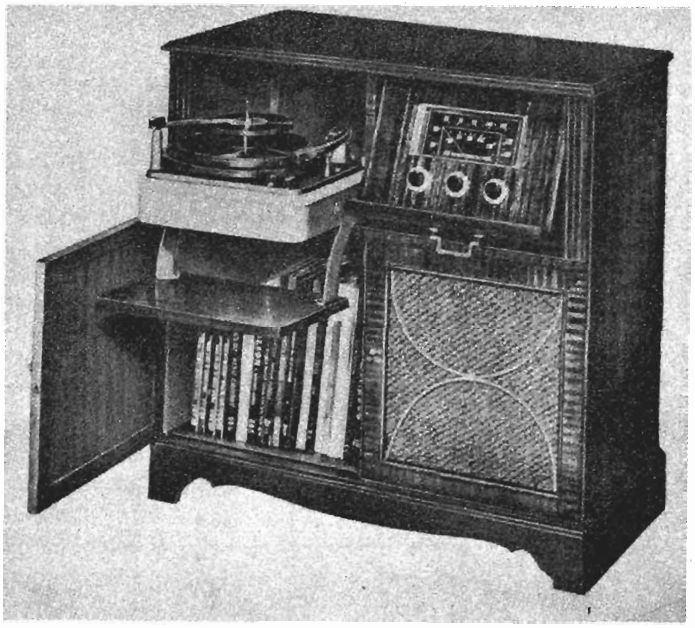

GENERAL SPECIFICATIONS

FREQUENCY RANGES:
AM—540 to 1700 Kc.
FM— 88 to 108 Mc.

TUNING CAPACITOR:
6 section gang (3-AM and 3-FM); entire R.F. tuning assembly is rubber mounted.

I.F. FREQUENCY:
AM—455 Kc.
FM—10.7 Mc.

POWER SUPPLY:
117 volts A.C.
Radio — 85 watts
Phono—115 watts

SPEAKER:
10 inch P.M. Dynamic
Voice coil impedance—3.2 ohms

POWER OUTPUT:
Undistorted—2.8 watts
Maximum —5.4 watts

ANTENNAS:
AM—Low impedance loop
FM—Single ended half wave dipole

RECORD CHANGER:
Automatic-intermix type; 3-speed

WEIGHT:
Packed—120 lbs.

DIMENSIONS:
Length—36"
Height—34"
Depth —18"

SENSITIVITY:
AM—20 microvolts per meter (average) for 0.5 watt output. This measurement must be made with the R.F. signal generator (modulated 30% at 400 cycles) coupled to the receiver by means of a standard test loop antenna.

FM—10 microvolts per meter (average) for 0.5 watt output. This measurement must be made with the R.F. signal generator (frequency modulated 30%—22½ Kc. deviation—at 400 cycles) coupled to the receiver thru appropriate size carbon resistors to match the 300 ohm antenna input circuit.

HOW TO REMOVE CHASSIS FROM CABINET

1. Remove all knobs by pulling them forward.
2. Disconnect all antenna leads from the terminal strip labeled "FM—FM—AM—AM."
3. Disengage phono pick-up plug from its socket at rear of chassis.
4. Disengage phono motor plug and socket.
5. Disconnect the leads from speaker at bottom left section of cabinet.
6. Remove "ON-OFF" indicator lamp and socket from bottom center of cabinet.
7. Remove bracket which clamps dial plate to front panel of cabinet.
8. Take out the four chassis hold-down screws that are located at each corner of the pan and serve to retain the unit in position on the tilt-out panel. Chassis can now be removed by lifting it out of cabinet.

©John F. Rider

Compliments of www.nucow.com

MODEL 9150-B

BROADCAST BAND—"AM"—ALIGNMENT PROCEDURE

1. Disconnect leads from FM-AM antenna terminal strip (labeled FM—FM—AM—AM) at back of chassis; also disconnect speaker leads and phono plugs. Remove chassis and speaker from cabinet. If desired, allow speaker to remain in cabinet and connect to receiver by extension leads.
2. Loop antenna leads (on cabinet) do not have to be connected to terminal strip on chassis while I.F. stages are being aligned. Before starting alignment of Ant., R.F., and Osc. stages, reconnect AM loop antenna leads to AM antenna terminal strip—do not attempt to use extension leads; place chassis as close as required to cabinet so that connections may be made direct to antenna terminal strip at back.
3. With the gang condenser fully meshed, dial pointer should be in the position indicated by the last division below 55 on the dial. If it is set incorrectly, hold tuning shaft steady and reposition pointer.
4. Connect an output meter across speaker voice coil, or from plate of 6V6GT tube to chassis through a 0.1 Mfd. condenser.
5. Connect ground lead of signal generator to the receiver chassis.
6. Set volume control to maximum volume position and use a weak signal from the signal generator.
7. Set band switch to the "AM" (middle) position.

DUMMY ANT. IN SERIES WITH SIGNAL GENERATOR	CONNECT HIGH SIDE OF SIGNAL GENERATOR TO	SIGNAL GENERATOR FREQUENCY	RECEIVER DIAL SETTING	TRIMMER OR SLUG NUMBER	TRIMMER DESCRIPTION	TYPE OF ADJUSTMENT
.1 MFD. Condenser	Lug on trimmer No. 6 at top of gang (see figure below for location of trimmer).	455 KC	Any point where it does not affect the signal.	1-2	2nd I.F.	Adjust for maximum output. Then repeat adjustment.
				3-4	1st I.F.	
260 MMFD. Mica Condenser	External Antenna Clip	1500 KC	1500 KC	5	Broadcast Oscillator	Adjust for maximum output.
260 MMFD. Mica Condenser	External Antenna Clip	1500 KC	Tune to 1500 Kc. generator signal.	6	Broadcast R.F.	Adjust for maximum output.
				7	Broadcast Antenna	Adjust for maximum output.
260 MMFD. Mica Condenser	External Antenna Clip	600 KC	Tune to 600 Kc. generator signal.	8	Adjustable core of Broadcast R.F. Coil.	Adjust for maximum output.
				9	Adjustable core of Broadcast Antenna Coil.	Adjust for maximum output.

Repeat adjustment of trimmers 6 & 7 and slugs 8 & 9 until one no longer detunes the other.

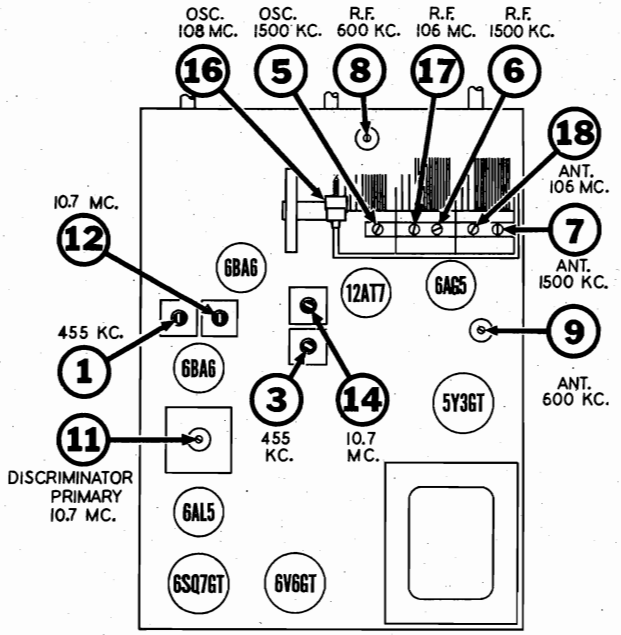

FIG. 1
Top View of Chassis

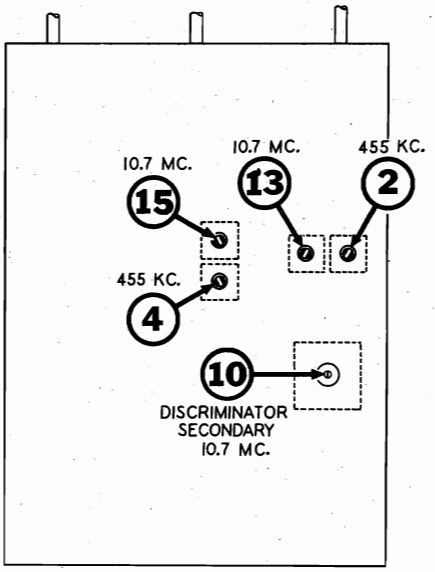

FIG. 2
Bottom View of Chassis

©John F. Rider

Compliments of www.nucow.com

MODEL 9150-B

FREQUENCY MODULATION—"FM"—ALIGNMENT PROCEDURE

1. If alignment of both AM and FM channels is required it is necessary to align the AM channel first, then align the FM channel as instructed in chart below (AM alignment procedure is given on the preceding page).
2. Disconnect all leads from antenna terminal strip (labeled FM—FM—AM—AM) at back of chassis; also disconnect speaker leads and phono plugs. Remove chassis and speaker from cabinet. If desired, allow speaker to remain in cabinet and connect to receiver by extension leads.
3. With the gang condenser fully meshed, dial pointer should be in the position indicated by the last division below 88 on the dial. If it is set incorrectly, hold tuning shaft steady and reposition pointer.
4. Set volume control at maximum volume position and use a weak signal from the signal generator.
5. Dress FM circuit leads as short and straight as possible, particularly those in the oscillator circuit. I.F. plate and grid leads should also be kept short and straight.
6. Set band switch to the FM (extreme counter-clockwise) position.

STANDARD SIGNAL GENERATOR		SWEEP GENERATOR		VTVM OR OUTPUT METER CONNECTIONS	OSCILLOSCOPE CONNECTIONS	RECEIVER DIAL SETTING	TRIMMER OR SLUG NUMBER	TYPE OF ADJUSTMENT AND OUTPUT INDICATION
CONNECTIONS	FREQUENCY	CONNECTIONS	FREQ.					
Connect high side to lug on trimmer #17 (see Fig. 1 for location of trimmer) using a .01 Mfd. condenser in series with generator lead. Connect ground lead to the receiver chassis in vicinity of gang condenser.	**10.7 MC.** Unmodulated	Not used.	—	Connect VTVM as shown in Fig. 4.	Not used.	Any position where it does not affect the signal.	**#10** Discriminator secondary **#11** Discriminator primary **#12-13** 2nd IF **#14-15** 1st IF	Adjust these trimmers for maximum meter reading — the output voltage will be of negative polarity.
Same as above.	Same as above.	Not used.	—	Connect VTVM as shown in Fig. 5.	Not used.	Same as above.	**#10** Discriminator secondary	Note that as slug #10 is rotated, a point will be found where the voltmeter will swing rather sharply from a positive to a negative reading or vice versa. The correct setting is obtained when the meter reads zero as the slug is moved thru this point.
Same as above.	Same as above. Attenuate signal to prevent overload and distortion of response curve.	Connect high side to lug on trimmer #17 (see Fig. 1 for location of trimmer) using a .01 Mfd. condenser in series with generator lead. Connect ground lead to the receiver chassis in vicinity of gang condenser.	**10.7 MC** Sweeping ±300 Kc.	Not used.	Connect as shown in Fig. 5. Set vertical amplifier of 'scope for maximum amplification. Synchronize oscilloscope with sweep generator by connecting "horizontal input" terminals of 'scope to source of horizontal sweep modulating voltage on the sweep generator.	Same as above.	**#10** Discriminator secondary	A pattern similar to that shown in Fig. 3 should appear on the oscilloscope screen. Check for symmetry about the 10.7 Mc. center point and linearity of the slope. 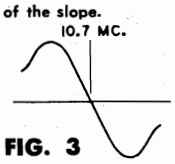 **FIG. 3** If the characteristic is not shaped properly, attempt to obtain symmetry by changing the setting of slug #10. Should that fail to produce the desired results, then a slight readjustment of slugs #11, 12, 13, 14 and 15 should be undertaken.

©John F. Rider

Compliments of www.nucow.com

MODEL 9150-B

FREQUENCY MODULATION—"FM"—ALIGNMENT PROCEDURE (Continued)

STANDARD SIGNAL GENERATOR		SWEEP GENERATOR		VTVM OR OUTPUT METER CONNECTIONS	OSCILLOSCOPE CONNECTIONS	RECEIVER DIAL SETTING	TRIMMER OR SLUG NUMBER	TYPE OF ADJUSTMENT AND OUTPUT INDICATION
CONNECTIONS	FREQUENCY	CONNECTIONS	FREQ.					
Connect generator "high" side in series with a 270 ohm carbon resistor to end terminal marked "FM" on strip at back of chassis. Generator ground lead must connect to next terminal marked "GND."	**108 MC.** with 400 cycle AM Modulation.	Not used.	——	Connect VTVM as shown in Fig. 5.	Not used.	**108 MC.**	**#16** FM Oscillator	Set trimmer #16 to receive 108 Mc. signal as indicated by maximum meter reading.
Same as above.	**106 MC.** with 400 cycle AM Modulation.	Not used.	——	Same as above.	Not used.	Tune to 106 Mc. generator signal.	**#13** FM RF **#18** FM ANT.	Adjust trimmer for maximum meter reading.

Check calibration and tracking of receiver with input signals of 88, 98 and 106 MC. If difference between dial pointer setting and these frequencies does not exceed ±0.3 MC. and R.F. circuit is tracking properly, then alignment may be considered satisfactory and no further adjustment is necessary. Where the calibration error is greater than ±0.3 MC., it is advisable to make the following adjustments:

Tune receiver to an 88 MC. signal and note whether dial pointer is above or below correct calibration point. Then tune receiver so that dial pointer is at the 88 MC. position. If generator signal was previously received at a setting above 88 MC., it will be necessary to slightly spread the windings of the FM oscillator coil so that signal will now be received at the correct dial setting. On the other hand, if generator signal was received at a dial setting below 88 MC., then slightly compress the windings of the oscillator coil until the signal comes in at the correct calibration point.

Check calibration at 108 MC. and if it is in error by more than ±0.3 MC., readjust setting of trimmer #16. Then repeat adjustments of trimmers #17 and 18 at 106 MC. Repeat calibration adjustment at 88, 106 and 108 MC. until desired accuracy is obtained.

Observe dial calibration at 106 MC. If it is found to be incorrect by an appreciable amount, then make a very slight adjustment in the spacing of the gang condenser plates to receive the 106 MC. signal at the correct dial setting. Then check adjustment of R.F. trimmer #17 and ANT. trimmer #18 to obtain maximum output indication at 106 MC.

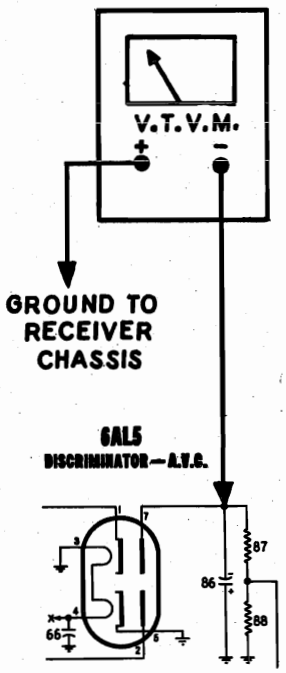

FIG. 4
VTVM Connections for I.F. Alignment

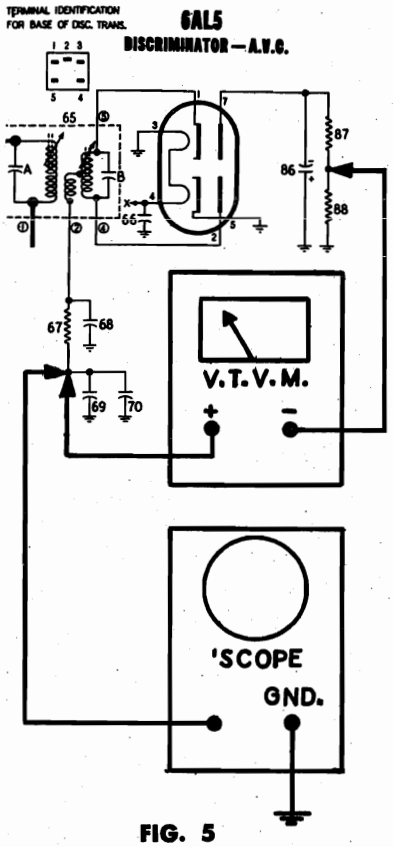

FIG. 5
VTVM and Oscilloscope Connections for Discriminator Alignment

©John F. Rider

Compliments of www.nucow.com

MODEL 9150-B

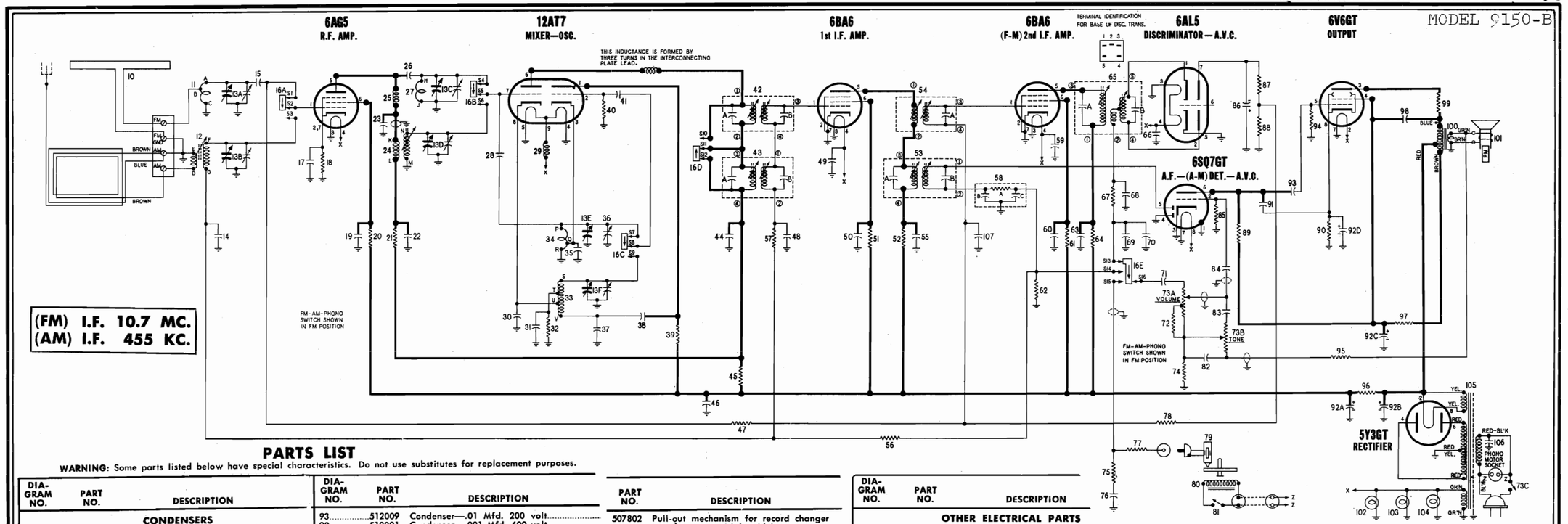

PARTS LIST

WARNING: Some parts listed below have special characteristics. Do not use substitutes for replacement purposes.

DIAGRAM NO.	PART NO.	DESCRIPTION
		CONDENSERS
13-A to F	506348	Condenser—variable gang (with drum)
14	512027	Condenser—.05 Mfd. 200 volt
15	513406	Condenser—ceramic 22 Mmfd. 500 volt (Temperature compensating)
17	513002	Condenser—ceramic 47 Mmfd. 500 volt
19	513013	Condenser—ceramic 5000 Mmfd. 450 volt
22	513013	Condenser—ceramic 5000 Mmfd. 450 volt
23	513002	Condenser—ceramic 47 Mmfd. 500 volt
26	513401	Condenser—ceramic 5 Mmfd. ±2% 500 volt (Temperature compensating)
28	513000	Condenser—ceramic 1.0 Mmfd. 500 volt
30	513007	Condenser—ceramic 330 Mmfd. 500 volt
31	512009	Condenser—.01 Mfd. 200 volt
35	513429	Condenser—ceramic 10 Mmfd. ±10% 500 volt (Temperature compensating)
36	506336	Condenser—trimmer; 3 to 30 Mmfd.
37	513442	Condenser—ceramic 10 Mmfd. ±10% 500 volt (Temperature compensating)
38	513013	Condenser—ceramic 5000 Mmfd. 450 volt
41	513409	Condenser—ceramic 39 Mmfd. ±5% 500 volt (Temperature compensating)
42-A	506080	Condenser—ceramic 33 Mmfd. (part of 1st FM I.F. transformer)
42-B	506080	Condenser—ceramic 72 Mmfd. (part of 1st FM I.F. transformer)
43-A, B	506333	Condenser—ceramic 330 Mmfd. (part of 1st AM I.F. transformer)
44	513013	Condenser—ceramic 5000 Mmfd. 450 volt
46	513013	Condenser—ceramic 5000 Mmfd. 450 volt
48, 49, 50	513013	Condenser—ceramic 5000 Mmfd. 450 volt
53-A	505797	Condenser—ceramic 107 Mmfd. (part of 2nd AM I.F. transformer)
53-B	505797	Condenser—ceramic 86 Mmfd. (part of 2nd AM I.F. transformer)
54-A	505905	Condenser—ceramic 83 Mmfd. (part of 2nd FM I.F. transformer)
55	513013	Condenser—ceramic 5000 Mmfd. 450 volt
58-B, C	506338	Condenser—ceramic 100 Mmfd. (part of diode filter unit)
59, 60	513013	Condenser—ceramic 5000 Mmfd. 450 volt
63	513013	Condenser—ceramic 5000 Mmfd. 450 volt
65-A	506332	Condenser—ceramic 8 Mmfd. (part of discriminator transformer)
65-B	506332	Condenser—ceramic 47 Mmfd. (part of discriminator transformer)
66	513013	Condenser—ceramic 5000 Mmfd. 450 volt
68	513007	Condenser—ceramic 330 Mmfd. 500 volt
69	512005	Condenser—.003 Mfd. 600 volt
70	513003	Condenser—ceramic 100 Mmfd. 500 volt
71	512027	Condenser—.05 Mfd. 200 volt
76	512011	Condenser—.01 Mfd. 400 volt
82	512033	Condenser—.1 Mfd. 200 volt
83	512001	Condenser—.001 Mfd. 600 volt
84	512009	Condenser—.01 Mfd. 200 volt
86	504937	Condenser—electrolytic 5 Mfd. 50 volt
91	513008	Condenser—ceramic 470 Mmfd. 350 volt
92-A,B,C,D	505908	Condenser—electrolytic A—30 Mfd. 450 volt B—40 Mfd. 450 volt C—10 Mfd. 450 volt D—20 Mfd. 25 volt
93	512009	Condenser—.01 Mfd. 200 volt
98	512001	Condenser—.001 Mfd. 600 volt
106	512256	Condenser—.01 Mfd. 600 volt
107	513013	Condenser—ceramic 5000 Mmfd. 450 volt
		RESISTORS
18	510117	Resistor—carbon 82 Ohms ±10% ½ watt
20	510164	Resistor—carbon 33,000 Ohms ½ watt
21	510237	Resistor—carbon 1000 Ohms 1 watt
32	510141	Resistor—carbon 1800 Ohms ±10% ½ watt
39	510237	Resistor—carbon 1000 Ohms 1 watt
40	510155	Resistor—carbon 10,000 Ohms ½ watt
45	510237	Resistor—carbon 1000 Ohms 1 watt
47	510167	Resistor—carbon 47,000 Ohms ½ watt
51	510165	Resistor—carbon 39,000 Ohms ±10% ½ w.
52	510237	Resistor—carbon 1000 Ohms 1 watt
56	510193	Resistor—carbon 2.2 Meg. ½ watt
57	510173	Resistor—carbon 100,000 Ohms ½ watt
58-A	506338	Resistor—carbon 47,000 Ohms (part of diode filter unit)
61	510165	Resistor—carbon 39 000 Ohms ±10% ½ w.
62	510185	Resistor—carbon 470,000 Ohms ½ watt
64	510237	Resistor—carbon 1000 Ohms 1 watt
67	510159	Resistor—carbon 18,000 Ohms ±10% ½ w.
72	510170	Resistor—carbon 68,000 Ohms ½ watt
73-A, B, C	508483	Volume and tone control A—2 Meg. B—2 Meg. C—"ON-OFF" switch
74	510128	Resistor—carbon 330 Ohms ½ watt
75	510170	Resistor—carbon 68,000 Ohms ½ watt
77	510179	Resistor—carbon 220,000 Ohms ½ watt
78	510193	Resistor—carbon 2.2 Meg. ½ watt
85	510195	Resistor—carbon 4.7 Meg. ½ watt
87, 88	510153	Resistor—carbon 8200 Ohms ±10% ½ watt
89	510179	Resistor—carbon 220,000 Ohms ½ watt
90	510128	Resistor—carbon 330 Ohms ½ watt
94	510185	Resistor—carbon 470,000 Ohms ½ watt
95	510149	Resistor—carbon 4700 Ohms ½ watt
96	510732	Resistor—wire wound 2000 Ohms ±10% 10 watts
97	510261	Resistor—carbon 22,000 Ohms 1 watt
99	510113	Resistor—carbon 47 Ohms ½ watt
		TRANSFORMERS AND COILS
10	508395	Antenna—built-in (FM)
11	506353	Coil—FM Antenna
12	506354	Coil—AM Antenna
	506349	Slug core for AM antenna coil
24	506345	Coil—AM R.F.
	506344	Slug core for AM R.F. coil
25	507935	Coil—choke
27	506351	Coil—FM R.F.
29	507586	Coil—choke
33	506335	Coil—AM Oscillator
34	506352	Coil—FM Oscillator
42	506080	Transformer—1st FM I.F.
43	506333	Transformer—1st AM I.F.
53	505797	Transformer—2nd AM I.F.
54	505905	Transformer—2nd FM I.F.
65	506332	Transformer—discriminator
	508841	Slug core for primary or secondary of discriminator transformer
100	508486	Transformer—output
105	506709	Transformer—power

PART NO.	DESCRIPTION
507802	Pull-out mechanism for record changer compartment (right side)
508840	Record changer base assembly
507807	Rod—tie; for record changer pull-out mechanism
160496	Rubber pad between dial plate and retaining bracket
160496	Rubber pad for mounting chassis
118621	Rubber pad for record changer pull-out mechanism
170167	Screw—#8-32x⅞"; for mounting chassis
508480	Socket for indicator lamp at base of cabinet (with leads)
506760	Spring—compression for record changer pull-out mechanism and radio compartment tilt mechanism
506761	Spring—tension for radio compartment tilt mechanism
507821	Spring—tension for record changer pull-out mechanism
507822	Trim strip for record changer base
	MISCELLANEOUS PARTS
506369	Background for dial (foil)
301270	Base for mounting electrolytic condenser
505165	"C" washer for tuning shaft or pointer shaft
508488	Clamp—retains dial scale
506343	Clip for mounting AM antenna or R.F. coil
505101	Clip for mounting I.F. transformer
160326	Clip—retains dial background
114955	Clip—retainer on end of dial cord
117057	Cord—dial drive (3 ft. required) ..... per ft.
508481	Dial scale—glass
501031	Plug for phono. motor cable
500966	Plug for phono. pick-up cable
506370	Pointer
119087	Ring for dial cord
38501	Rubber bushing for band switch
116584	Rubber spacer for mounting dial scale
503588	Shaft and drum for dial
162148	Shaft and link assembly; Band switch
508485	Shaft—tuning
506349	Slug core for AM antenna coil
506344	Slug core for AM R.F. coil
508841	Slug core for primary or secondary of discriminator transformer
505307	Socket and phono. motor cable
506372	Socket—dial lamp; pair (with lead)
504597	Socket—miniature (7 pin)
506331	Socket—miniature (9 pin)
116690	Socket—octal base
160392	Socket—octal (rectifier)
160039	Socket—phono. plug
505161	Spring—dial cord tension
505924	Terminal strip (FM-FM-AM-AM)
111456	Washer—spring washer for tuning shaft or pointer shaft

DIAGRAM NO.	PART NO.	DESCRIPTION
		OTHER ELECTRICAL PARTS
16-A to E	506347	Switch—FM-AM-Phono
58-A, B, C	506338	Diode filter unit A—Resistor-carbon 47,000 Ohms 1/5 watt B—Condenser-ceramic 100 Mmfd. 400 volt C—Condenser-ceramic 100 Mmfd. 400 volt
101	506464	Speaker—P.M. Dynamic (10 inch)
102, 103, 104	118921	Lamp—dial (Mazda 47) 6-8 volt 150 Ma.
		RECORD CHANGER PARTS (for mechanical parts, see record ch'g'r sec. of manual.)
	508222	Record Changer (3 speed)
79	508432	Crystal Cartridge
80	508120	Motor—115 volt 60 cycle
81	505269	Switch—"ON-OFF" for record changer
	508434	Needle—phonograph; for "Fine Groove" and "Microgroove" records
	508433	Needle—phonograph; for "Standard" records
		CABINET PARTS
	508217	Bracket for mounting OFF-ON indicator lite at base of cabinet
	508487	Bracket—retains dial plate
	506757	Bracket—slide; retains radio compartment
	507808	Bracket—tie for record changer pull-out mechanism
	117131	Bull's-eye for OFF-ON indicator lite at base of cabinet
	508399	Cabinet
	508499	Catch for record storage compartment
	508495	Door and radio tilt compartment assembly (less hardware)
	508494	Door for record changer compartment (less hardware)
	508496	Door for record storage compartment (less hardware)
	508493	Escutcheon—dial
	506380	Fastener for loop antenna
	508497	Handle for radio or record changer door
	508498	Handle for record storage compartment door
	506640	Hinge—for record storage compartment; ..... per pair
	508492	Knob—"PHO. AM FM"
	508490	Knob—"TONE"
	508491	Knob—"TUNE"
	508489	Knob—"VOLUME-ON"
	170188	Nut—Wing #10-24; for tension adjustment of radio compartment tilt mechanism
	507809	Nut—wing #10-32; for tension adjustment on record changer pull-out mechanism
	508397	Pivot bolt for radio tilt compartment
	507801	Pull-out mechanism for record changer compartment (left side)

TERMINAL Q IS LOCATED ⅞ TURN FROM TERMINAL R

FM OSC. COIL 506352

TERMINAL B IS LOCATED 1¼ TURN FROM TERMINAL A

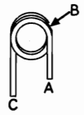

FM ANT. COIL 506353

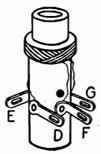

AM ANT. COIL 506354

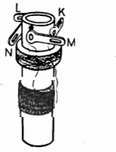

AM R.F. COIL 506345

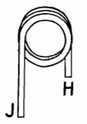

FM R.F. COIL 506351

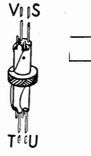

AM OSC. COIL 506335

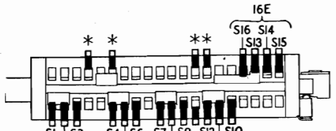

★ Not used; may serve as wiring junction point.

BAND SWITCH 506347

Lettered terminals in illustrations correspond to similarly lettered terminals on the circuit diagram.

©John F. Rider

Compliments of www.nucow.com

MODEL 9150-B

STAGE GAIN MEASUREMENT PROCEDURE

REQUIRED INSTRUMENTS: The amount of amplification or "gain" of each of the stages of this receiver can be measured with an A.C. Vacuum Tube Voltmeter of the high frequency type (uniform response up to 100 MC.). An AM (600 KC.) as well as an FM (98 MC.) signal source is required. For gain measurements in the FM antenna—FM converter—FM 1st I.F. stages, a microvolt calibrated FM signal generator should preferably be used.

PROCEDURE: It is exceedingly important to adhere to the procedure outlined below since the accuracy of these measurements will be affected to a considerable extent by the failure to establish proper operating conditions.

1. Be sure that R.F., I.F. and Discriminator stages are carefully and accurately aligned by utilizing the alignment procedure given on pages 1950-49 and 1950-50.
2. Connect Signal Generator as shown below. Note that generator connections differ for "AM" and "FM" measurements.
3. For "AM" measurements, set signal generator to 600 KC. (400 cycle modulation) and then carefully tune radio receiver to this signal by using an output meter to indicate peak output. If a local station interferes, set generator to a nearby frequency and re-tune the receiver.
4. For "FM" measurements, set signal generator to 98 MC. (400 cycle modulation with 22½ KC. deviation) and then carefully tune radio receiver to this signal by using a D.C. Vacuum Tube Voltmeter as an output indicator—meter must be connected between pin No. 7 of 6AL5 tube and chassis. If a local station interferes, set generator to a nearby frequency and re-tune the receiver.
5. The values of stage gain which are given here were measured with a fixed bias of —3 volts on the control grids of all R.F. and I.F. tubes which are connected to the A.V.C. system. Therefore, these values are not intended to indicate the full capability of a stage but they will serve as a convenient basis for determining proper operation. In order to duplicate the fixed bias voltage, connect the negative terminal of a 3 volt battery to both A.V.C. supply lines by effecting a common connection to terminal 4 of 2nd FM I.F. transformer and junction of resistors 56 and 57. Then connect the positive battery lead to the receiver chassis.
6. R.F. and I.F. circuits are slightly de-tuned when contact is made with an instrument probe and this action, which is indicated by a change in the output meter reading, may seriously affect the gain measurement. Therefore, it is important to adjust the associated circuit trimmer for a maximum output meter reading and to set the input signal level to a convenient reference point on the gain measuring instrument while the probe is making contact. After removing the probe it is again necessary to adjust the trimmer so as to obtain the same output meter reading and thereby assure that the signal voltage at the specified point has not changed as a result of circuit de-tuning.

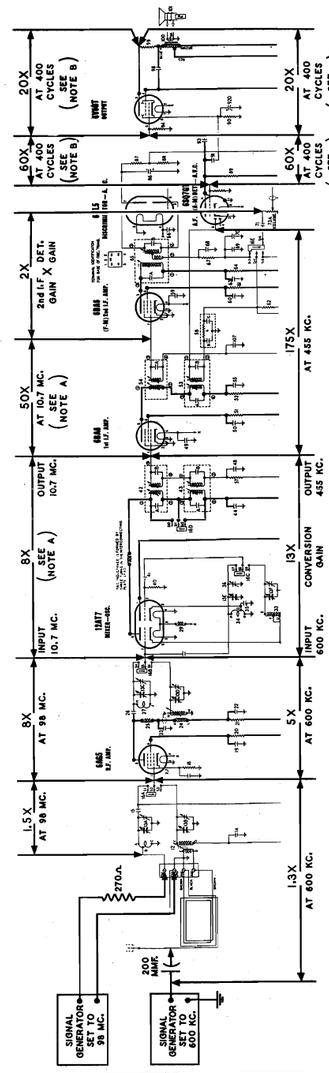

NOTE A: When making this measurement connect signal generator to pin 7 of 12AT7 and adjust frequency to 10.7 MC. Also short oscillator grid, pin 2, to ground so that local oscillator will be inoperative.

NOTE B: Tone control set to its maximum clockwise position.

DIFFERENCES in tube characteristics, tolerance of parts, adjustment of tuned circuits and variations in line voltage will influence stage gain. These factors should be given due attention in event the gain of a stage varies extensively from the values shown above.

DIAL AND POINTER DRIVE CORD ARRANGEMENT

SIDE VIEW

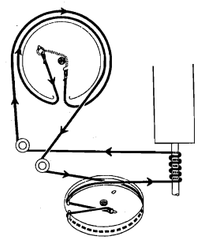

To string dial cord, set gang condenser to fully open position and use the following parts:
114955 Clip on end of cord
117057 Cord (3 feet)
119087 Ring for dial cord
505161 Tension spring

©John F. Rider

MODEL 9150-B

SOCKET VOLTAGES

THE VOLTAGE SHOWN IN THIS CHART WERE MEASURED UNDER THE FOLLOWING CONDITIONS

1. Power Supply—117 volts 60 cycles A.C.
2. All voltages are measured between socket terminals and chassis unless otherwise indicated on the chart.
3. All measurements made with a voltmeter having a sensitivity of 1000 ohms per volt except where indicated by (*). The (*) symbol designates a vacuum tube voltmeter measurement.
4. Where a particular voltage is dependent upon band switch position, the value shown on the chart carries a letter suffix which is interpreted as follows (no suffix letter indicates that voltage is the same for any of the three switch positions).
   "A" indicates band switch set to "AM" (center) position.
   "F" indicates band switch set to "FM" (counter-clockwise) position.
   "P" indicates band switch set to "PHO" (clockwise) position.
5. When measuring FM voltages, receiver should be tuned to 88 Mc.
6. When measuring AM voltages, receiver should be tuned to 540 Kc.
7. All terminals on strip labeled "FM—FM—AM—AM" at rear of chassis are shorted together by using a jumper wire.
8. Volume control set to maximum position with no signal.
9. Tone control set to maximum clockwise position.

BOTTOM VIEW OF CHASSIS

117 VOLT 60 CYCLE A. C. POWER SUPPLY USED FOR THESE MEASUREMENTS.

ALL VOLTAGES MEASURED BETWEEN SOCKET TERMINALS AND CHASSIS UNLESS OTHERWISE INDICATED.

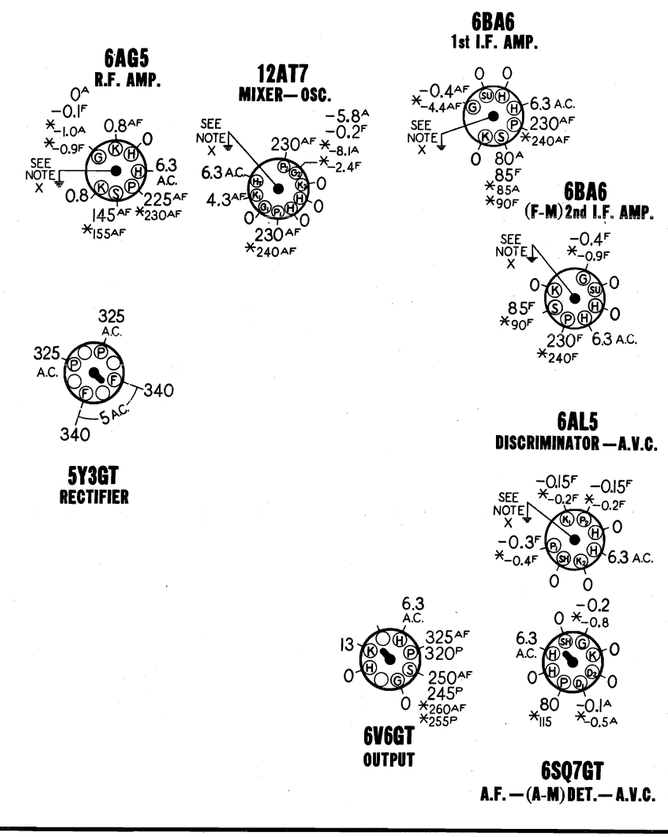

REAR OF CHASSIS

NOTE X: Grounding of center stud on tube socket is necessary to reduce capacity coupling between other pins. Oscillation may result if this ground is omitted.

©John F. Rider

Compliments of www.nucow.com

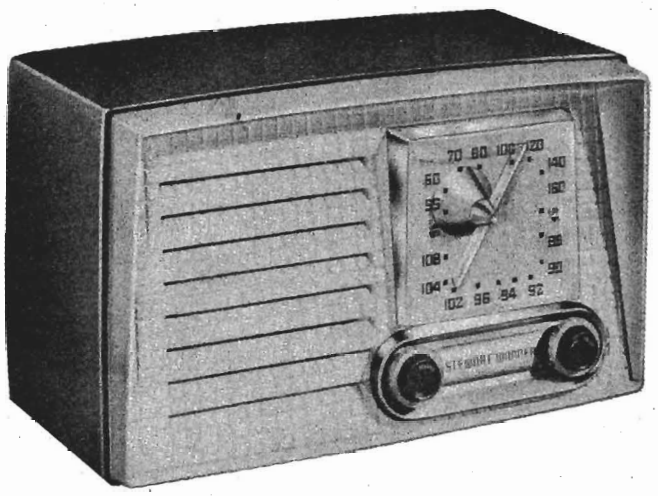

GENERAL SPECIFICATIONS

SPEAKER:

6 inch P-M Dynamic

Voice coil impedance—3.2 ohms

POWER OUTPUT:

Undistorted—1.2 watts

Maximum—2.3 watts

ANTENNAS:

AM—High impedance loop

FM—Built-in line cord type

WEIGHT:

13 pounds

DIMENSIONS:

Length—15"

Heigth—9¼"

Depth—8¼"

FREQUENCY RANGES:

AM—540 to 1700 KC.

FM—88 to 108 MC.

I.F. FREQUENCY:

AM—455 KC.

FM—10.7 MC.

TUNING CAPACITOR:

4 section gang (2-AM and 2-FM) rigid mounting.

POWER SUPPLY:

117 volts A.C. or D.C.

40 watts

HOW TO REMOVE CHASSIS FROM CABINET

1. Remove all knobs by pulling them forward.
2. Take off dial scale by pressing down on top center of plastic dial enclosure and at the same time pulling it forward.
3. Remove pointer by pulling it forward.
4. Remove cabinet back by taking out three screws and two clips. Note: Cabinet back has a power cord interlock which is automatically disconnected when back is removed.
5. Take out two chassis mounting screws at bottom of cabinet. Chassis may now be readily removed by sliding it out of cabinet.
6. When replacing cabinet back be sure that it is parallel to loop and power cord interlock plug fits into socket on chassis.

DIAL POINTER DRIVE CORD ARRANGEMENT

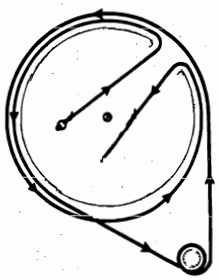

To string dial cord, turn the main drive drum to maximum counter-clockwise position and use following parts:

114955 Clip on end of cord
117057 Cord (3½ ft. required)
119087 Ring for dial cord
161384 Spring

SOCKET VOLTAGES

THE VOLTAGES SHOWN IN THIS CHART WERE MEASURED UNDER THE FOLLOWING CONDITIONS

1. Power Supply—117 volts 60 cycles A.C.
2. All voltages are measured between socket terminals and chassis unless otherwise indicated on the chart.
3. All measurements made with a voltmeter having a sensitivity of 1000 ohms per volt except where indicated by (*). The (*) symbol designates a vacuum tube voltmeter measurement.
4. Where a particular voltage is dependent upon band switch position, the value shown on the chart carries a letter suffix which is interpreted as follows:

"A" indicates band switch set to "AM" (counter-clockwise) position.
"F" indicates band switch set to "FM" (center) position.
"P" indicates band switch set to "PHO" (clockwise) position.
No suffix letter indicates that voltage is the same for any of the three switch positions.

5. When measuring FM voltages, receiver should be tuned to 88 Mc.
6. When measuring AM voltages, receiver should be tuned to 540 Kc.
7. Terminals on AM loop antenna are shorted together.
8. Built-in FM antenna lead is disconnected from the "FM ANT." terminal.
9. Volume control set to maximum with no signal.

©John F. Rider

Compliments of www.nucow.com

STAGE GAIN MEASUREMENT PROCEDURE

REQUIRED INSTRUMENTS: The amount of amplification or "gain" of each of the stages of this receiver should be measured with an A. C. Vacuum Tube Voltmeter of the high frequency type (uniform response up to 100 MC). A conventional "AM" type signal generator may be used but it must be capable of producing **fundamental** frequencies of 600 KC. and 98 MC—**avoid using a generator that produces the 98 MC. signal by means of harmonics.**

PROCEDURE: It is exceedingly important to adhere to the procedure outlined below since the accuracy of these measurements will be affected to a considerable extent by the failure to establish proper operating conditions.

1. Be sure that R.F., I.F. and Discriminator stages are carefully and accurately aligned by utilizing the alignment procedure given on page 1950-7.
2. Connect Signal Generator as shown below. Note that generator connections differ for "AM" and "FM" measurements.
3. For "AM" measurements, set signal generator to 600 KC. and then carefully tune radio receiver to this signal by using an output meter to indicate peak output. If a local station interferes, set generator to a nearby frequency and re-tune the receiver.
4. For "FM" measurements, set signal generator to 98 MC. and then carefully tune radio receiver to this signal by using a D. C. Vacuum Tube Voltmeter as an output indicator—meter must be connected between pin 2 of 12AL5 tube and chassis ground. If a local station interferes, set generator to a nearby frequency and re-tune the receiver.
5. The values of stage gain which are given here were measured with a fixed bias of 3 volts on the control grids of all R.F. and I.F. tubes which are connected to the A.V.C. circuit. Therefore, these values are not intended to indicate the full capability of a stage but they will serve as a convenient basis for determining proper operation. In order to duplicate the fixed bias voltage, connect the negative terminal of a 3 volt battery to A.V.C. at terminal 3 of the 1st AM I.F. transformer and connect the positive battery lead to chassis ground.
6. R.F. and I.F. circuits are slightly de-tuned when contact is made with an instrument probe and this action, which is indicated by a change in the output meter reading, may seriously affect the gain measurement. Therefore, it is important to adjust the associated circuit trimmer for a maximum output meter reading and to set the input signal level to a convenient reference point on the gain measuring instrument while the probe is making contact. After removing the probe it is again necessary to adjust the trimmer so as to obtain the same output meter reading and thereby assure that the signal voltage at the specified point has not changed as a result of circuit de-tuning.

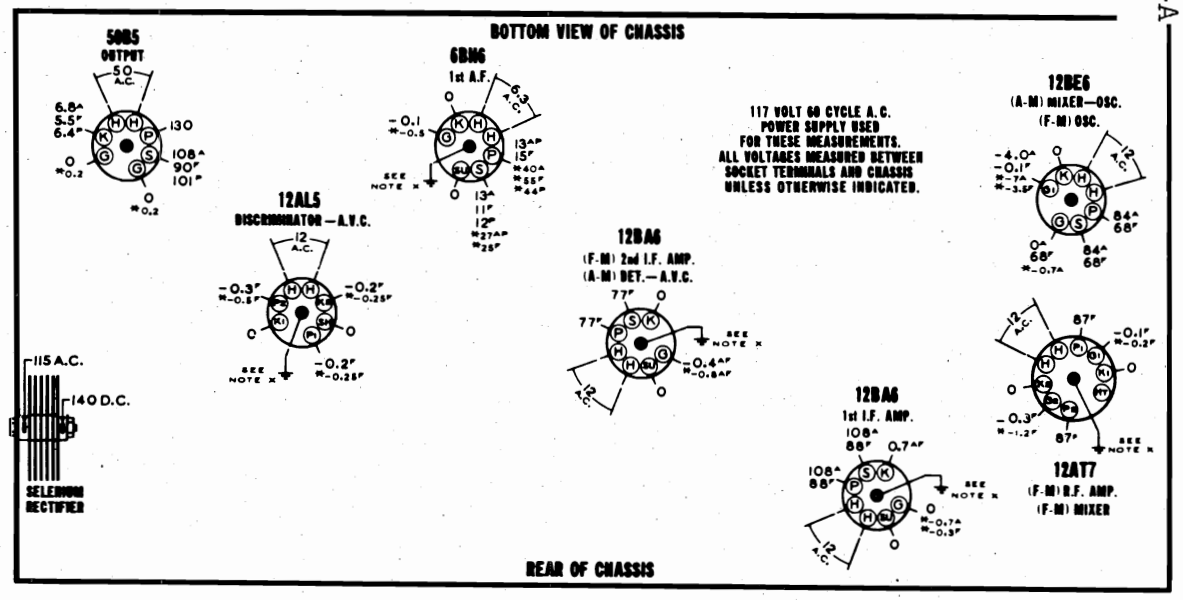

NOTE X: Grounding of center stud on tube socket is necessary to reduce capacity coupling between other pins. Oscillation may result if this ground is omitted.

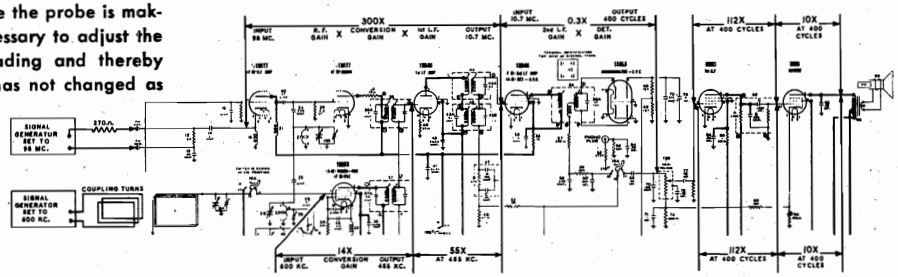

DIFFERENCES in tube characteristics, tolerance of parts, adjustment of tuned circuits and variations in line voltage will influence stage gain. These factors should be given due attention in event the gain of a stage varies extensively from the values shown above.

©John F. Rider

Compliments of www.nucow.com

MODEL 9151-A

BROADCAST BAND—"AM"—ALIGNMENT PROCEDURE

1. If alignment of both AM and FM channels are required, it is advisable to align the AM channel first; then align the FM channel as instructed on Page 1950-7.
2. Remove chassis and loop antenna (which is mounted to chassis) from cabinet by following procedure outlined on Page 1950-3. Allow loop to remain attached to chassis.
3. In order to provide a coupling for signal generator during R.F. alignment as instructed in chart below, wind several turns of wire in a circular shape so that it may be placed adjacent and parallel to the loop.
4. Connect an output meter across the speaker voice coil or from the plate of the 50B5 tube to chassis through a 0.1 Mfd. condenser.
5. Set band switch to the "AM" (counter-clockwise) position.
6. Set volume control at maximum and use a weak signal from the signal generator.
7. Since the dial scale is a part of the cabinet, when completely assembled, it becomes necessary to provide a temporary means of locating the dial to obtain calibration points. Rotate gang condenser fully counter-clockwise and replace pointer so that it is **parallel** with base of the chassis. Now, hold dial scale in front of pointer in such a position that the ends of the indicator point to the "AM" and "FM" markers. While holding the dial scale in this position, rotate tuning sleeve until pointer indicates desired frequency.

SIGNAL GENERATOR CONNECTIONS		SIGNAL GENERATOR FREQUENCY	RECEIVER DIAL SETTING	TRIMMER OR SLUG NUMBER	TRIMMER DESCRIPTION	TYPE OF ADJUSTMENT
CONNECT HIGH SIDE OF SIGNAL GENERATOR TO	CONNECT GROUND LEAD OF SIGNAL GENERATOR TO					
Lug on trimmer #6 at top of gang (see figure 1 for location of trimmer).	Chassis ground. **CAUTION:** If your signal generator is designed with an AC-DC type power supply, connect ground lead of signal generator to receiver chassis through a .25 Mfd. condenser.	455 KC	Any point where it does not affect the signal.	1 and 2	2nd I.F.	Adjust for maximum output. Then repeat adjustment.
				3 and 4	1st I.F.	
Connect directly to coupling turn. See Step 3 above for instruction on coupling loop.		1500 KC	1500 KC See Step 7 above for instructions on how to obtain this calibration point.	5	AM Oscillator	Adjust for maximum output.
Connect directly to coupling turn. See Step 3 above for instruction on coupling loop.		1500 KC	Tune to 1500 Kc. generator signal.	6	AM Antenna	Adjust for maximum output.

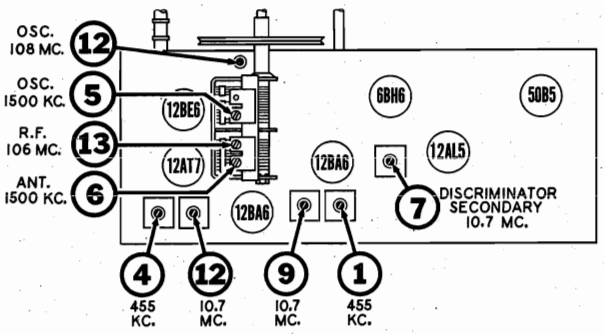

Top View of Chassis

FIG. 1

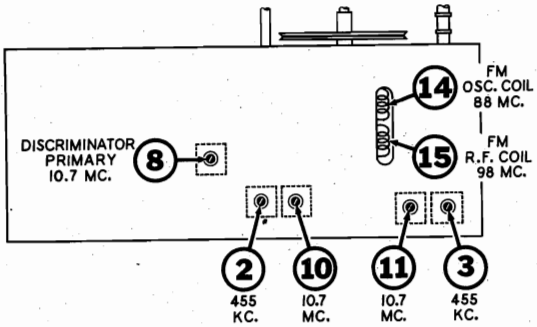

Bottom View of Chassis

FIG. 2

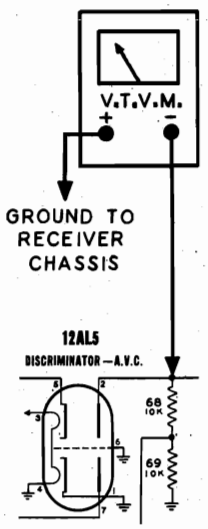

FIG. 3
VTVM Connections for IF Alignment

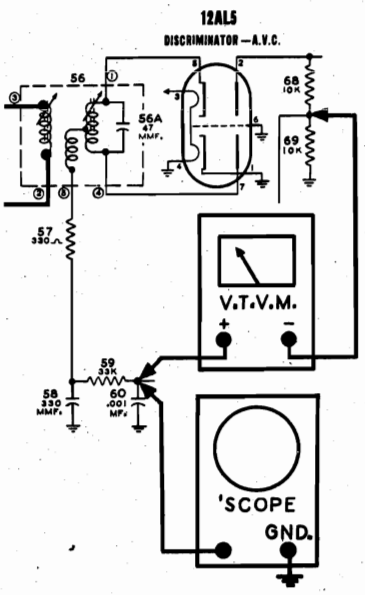

FIG. 4
VTVM and Oscilloscope Connections for Discriminator Alignment

©John F. Rider

Compliments of www.nucow.com

MODEL 9151-A

FREQUENCY MODULATION—"FM"—ALIGNMENT PROCEDURE

1. If alignment of both AM and FM channels are required it is advisable to align the AM channel first as instructed in chart on Page 1950-6. Then, accomplish FM channel alignment by using the procedure outlined in the chart below.
2. Remove chassis and loop antenna (which is mounted to chassis) from cabinet by following procedure outlined on Page 1950-3. Allow loop to remain attached to chassis.
3. Disconnect built-in FM lead from "FM ANT." terminal at back of chassis.
4. Set band switch to the "FM" (middle) position.
5. Set volume control at maximum and use a weak signal from the signal generator.
6. Dress FM circuit leads as short and straight as possible, particularly those in the oscillator circuit. IF plate and grid leads should also be kept short and straight.
7. Since the dial scale is a part of the cabinet, when completely assembled, it becomes necessary to provide a temporary means of locating the dial to obtain calibration points. Rotate gang condenser fully counter-clockwise and replace pointer so that it is **parallel** with base of the chassis. Now, hold dial scale in front of pointer in such a position that the ends of the indicator point to the "AM" and "FM" markers. While holding the dial scale in this position, rotate tuning sleeve until pointer indicates desired frequency.

STANDARD SIGNAL GENERATOR		SWEEP GENERATOR		VTVM OR OUTPUT METER CONNECTION	OSCILLOSCOPE CONNECTIONS	RECEIVER DIAL SETTING	TRIMMER OR SLUG NUMBER	TYPE OF ADJUSTMENT AND OUTPUT INDICATION
CONNECTIONS	FREQUENCY	CONNECTIONS	FREQ.					
Connect high side to lug on trimmer #13 (see Fig. 1 for location of trimmer) using a .01 Mfd. condenser in series with generator lead. Connect ground lead to the receiver chassis in vicinity of gang condenser. **CAUTION:** If your signal generator is designed with an AC-DC type power supply, connect ground lead of signal generator to receiver chassis through a .25 Mfd. condenser.	**10.7 MC.** Unmodulated	Not used.	———	Connect VTVM as shown in Fig. 3.	Not used.	Any position where it does not affect the signal.	**#7** Discriminator secondary **#8** Discriminator primary **#9—10** 2nd IF **#11—12** 1st IF	Adjust these trimmers for maximum meter reading — the output voltage will be of negative polarity.
Same as above.	Same as above.	Not used.	———	Connect VTVM as shown in Fig. 4.	Not used.	Same as above.	**#7** Discriminator secondary	Note that as slug #7 is rotated, a point will be found where the voltmeter will swing rather sharply from a positive to a negative reading or vice versa. The correct setting is obtained when the meter reads zero as the slug is moved thru this point.
Same as above.	Same as above. ——— Attenuate signal to prevent overload and distortion of response curve.	Connect high side to lug on trimmer #13 (see Fig. 1 for location of trimmer) using a .01 Mfd. condenser in series with generator lead. Connect ground lead to the receiver chassis in vicinity of gang condenser. **CAUTION:** If your signal generator is designed with an AC-DC type power supply, connect ground lead of signal generator to receiver chassis through a .25 Mfd. condenser.	**10.7 MC** Sweeping ±300 Kc.	Not used.	Connect as shown in Fig. 4. ——— Set vertical amplifier of 'scope for maximum amplification. ——— Synchronize oscilloscope with sweep generator by connecting "horizontal input" terminals of 'scope to source of horizontal sweep modulating voltage on the sweep generator.	Same as above.	**#7** Discriminator secondary	A pattern similar to that shown in Fig. 5 should appear on the oscilloscope screen. Check for symmetry about the 10.7 Mc. center point and linearity of the slope. 10.7 MC. **FIG. 5** If the characteristic is not shaped properly, attempt to obtain symmetry by changing the setting of slug #7. Should that fail to produce the desired results, then a slight readjustment of slugs #8, 9, 10, 11 and 12 should be undertaken.
Connect high side in series with a 270 ohm carbon resistor to "FM ANT." terminal at rear of chassis. Connect ground lead to "FM GND." terminal.	**108 MC.** with 400 cycle AM Modulation.	Not used.	———	Connect VTVM as shown in Fig. 3.	Not used.	108 Mc. See Step 7 above for instructions on how to obtain this calibration point.	**#12** FM Oscillator	Set trimmer #12 to receive 108 Mc. signal as indicated by maximum meter reading.
Same as above.	**108 MC.** with 400 cycle AM Modulation.	Not used.	———	Same as above.	Not used.	Tune to 108 Mc. generator signal.	**#13** FM RF	Adjust trimmer for maximum meter reading.

Check calibration and tracking of receiver with input signals of 88 and 98 MC. If difference between dial pointer setting and the above mentioned frequencies does not exceed ±0.3 MC. and RF circuit is tracking properly then alignment may be considered satisfactory and no further adjustment is necessary.
Where the calibration error is greater than ±0.3 MC. it is advisable to make the following adjustments:
Tune receiver to an 88 MC. signal and note whether dial pointer is above or below correct calibration point. Then tune receiver so that dial pointer is at the 88 MC. position. If generator signal was previously received at a setting above 88 MC., it will be necessary to slightly spread the windings of the FM oscillator coil (#14 in Fig. 2) so that signal will now be received at the correct dial setting. On the other hand, if generator signal was received at a dial setting below 88 MC., then slightly compress the windings of the oscillator coil until the signal comes in at the correct calibration point.
Check calibration at 108 MC. and if it is in error by more than ±0.3 MC., readjust setting of trimmer # 12. Repeat calibration adjustment at 88 and 108 MC. until desired accuracy is obtained.
Observe dial calibration at 98 MC. If it is found to be incorrect by an appreciable amount, then make a very slight adjustment in the spacing of the gang condenser plates to receive the 98 MC. signal at the correct dial setting. Then check adjustment of RF trimmer #13 to obtain maximum output indication at 98 MC.

©John F. Rider

Compliments of www.nucow.com

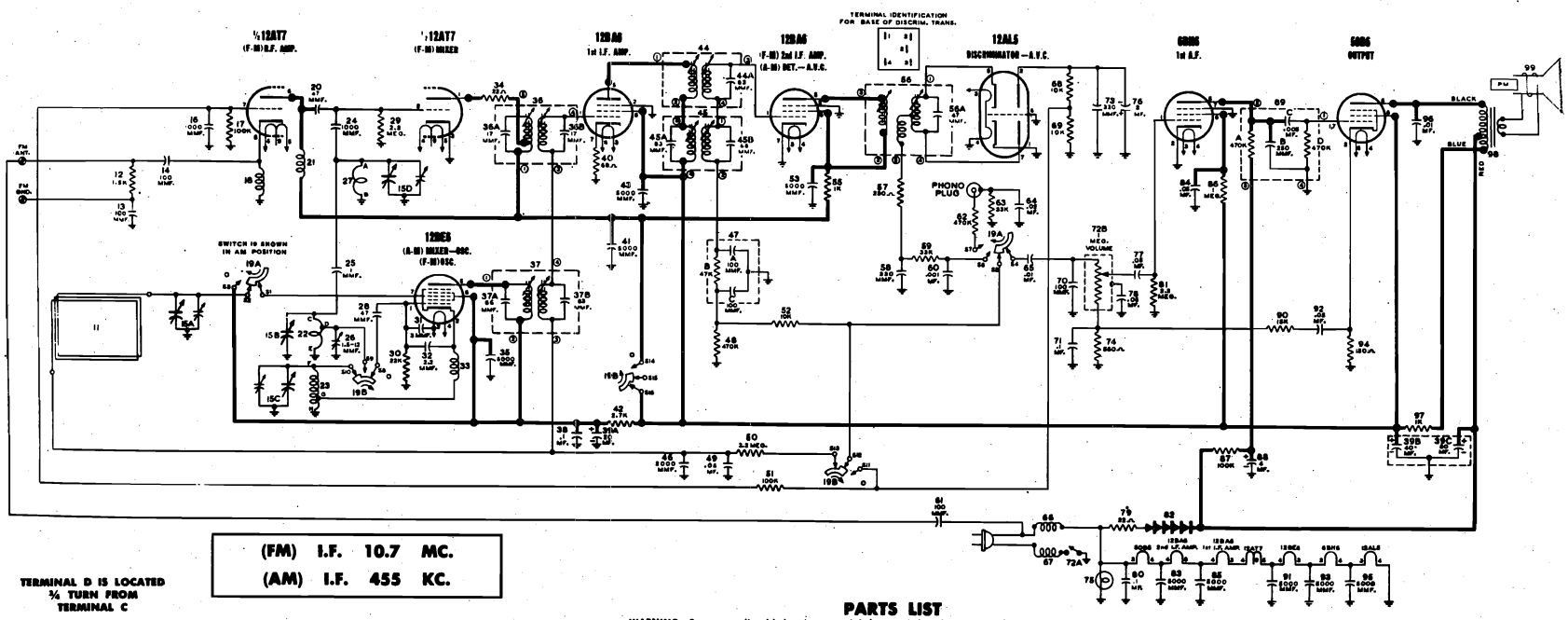

(FM)	I.F.	10.7	MC.
(AM)	I.F.	455	KC.

TERMINAL D IS LOCATED ¼ TURN FROM TERMINAL C

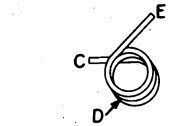

FM OSC. COIL 508225

AM OSC. COIL 507939

FM R.F. COIL 508224

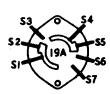

SECTION 1 FRONT VIEW

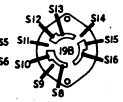

SECTION 1 REAR VIEW

BAND SWITCH 508231

Lettered terminals in illustrations correspond to similarly lettered terminals on the circuit diagram.

PARTS LIST

WARNING: Some parts listed below have special characteristics. Do not use substitutes for replacement purposes.

DIA-GRAM NO.	PART NO.	DESCRIPTION
		CONDENSERS
13, 14	513003	Condenser—ceramic 100 Mmfd. 500 volt
15-A to D	508253	Condenser—variable gang (includes drum)
16	513009	Condenser—ceramic 1000 Mmfd. 500 volt
20	513002	Condenser—ceramic 47 Mmfd. 500 volt
24	513009	Condenser—ceramic 1000 Mmfd. 500 volt
25	513000	Condenser—ceramic 1.0 Mmfd. 500 volt
26	507940	Condenser—trimmer 1.5-12 Mmfd.
28	513002	Condenser—ceramic 47 Mmfd. 500 volt
31	513400	Condenser—ceramic 3 Mmfd. ±15% 500 v. (Temperature compensating)
32	513001	Condenser—ceramic 2.2 Mmfd. 500 volt
35	513013	Condenser—ceramic 5000 Mmfd. 450 volt
36-A, B	507943	Condenser—ceramic 17 Mmfd. (part of 1st FM I.F. transformer)
37A	505867	Condenser—ceramic 66 Mmfd. (part of 1st AM I.F. transformer)
37B	505867	Condenser—ceramic 83 Mmfd. (part of 1st AM I.F. transformer)
38	512033	Condenser—.1 Mfd. 200 volt
39-A, B, C	507947	Condenser—electrolytic A—20 Mfd. 150 volt; B—40 Mfd. 150 volt; C—80 Mfd. 150 volt
41	513013	Condenser—ceramic 5000 Mmfd. 450 volt
43	513013	Condenser—ceramic 5000 Mmfd. 450 volt
44-A	505905	Condenser—ceramic 83 Mmfd. (part of 2nd FM I.F. transformer)
45-A	505867	Condenser—ceramic 83 Mmfd. (part of 2nd AM I.F. transformer)
45-B	505867	Condenser—ceramic 66 Mmfd. (part of 2nd AM I.F. transformer)
46	513013	Condenser—ceramic 5000 Mmfd. 450 volt
47-A	506338	Condenser—ceramic 100 Mmfd. 400 volt (part of diode filter unit)
47-C	506338	Condenser—ceramic 100 Mmfd. 400 volt (part of diode filter unit)
49	512027	Condenser—.05 Mfd. 200 volt
53	513013	Condenser—ceramic 5000 Mmfd. 450 volt
56-A	507943	Condenser—ceramic 47 Mmfd. (part of discriminator transformer)
58	513007	Condenser—ceramic 330 Mmfd. 500 volt
60	512001	Condenser—.001 Mfd. 600 volt
61	513003	Condenser—ceramic 100 Mmfd. 500 volt
64	512013	Condenser—.02 Mfd. 200 volt
65	512009	Condenser—.01 Mfd. 200 volt
70	513003	Condenser—ceramic 100 Mmfd. 500 volt
71	512033	Condenser—.1 Mfd. 200 volt
73	513007	Condenser—ceramic 330 Mmfd. 500 volt
76	507946	Condenser—electrolytic 3 Mfd. 50 volt
77	512027	Condenser—.05 Mfd. 200 volt
78	512027	Condenser—.05 Mfd. 200 volt
80	512037	Condenser—.1 Mfd. 600 volt
83	513013	Condenser—ceramic 5000 Mmfd. 450 volt
84	512027	Condenser—.05 Mfd. 200 volt
85	513013	Condenser—ceramic 5000 Mmfd. 450 volt
88	502547	Condenser—electrolytic 4 Mfd. 150 volt
89-B	505858	Condenser—ceramic 250 Mmfd. 450 volt (part of audio coupling unit)
89-C	505858	Condenser—ceramic .005 Mfd. 450 volt (part of audio coupling unit)
91	513013	Condenser—ceramic 5000 Mmfd. 450 volt
92	512027	Condenser—.05 Mfd. 200 volt
93	513013	Condenser—ceramic 5000 Mmfd. 450 volt
95	513013	Condenser—ceramic 5000 Mmfd. 450 volt
96	512011	Condenser—.01 Mfd. 400 volt
		RESISTORS
12	510139	Resistor—carbon 1500 Ohms ±10% ½ w
17	510173	Resistor—carbon 100,000 Ohms ½ watt
29	510193	Resistor—carbon 2.2 Meg. ½ watt
30	510161	Resistor—carbon 22,000 Ohms ½ watt
34	510106	Resistor—carbon 22 Ohms ±10% ½ w
40	510116	Resistor—carbon 68 Ohms ½ watt
42	510144	Resistor—carbon 2700 Ohms ±10% ½ w
47-B	506338	Resistor—carbon 47,000 Ohms (part of diode filter unit)
48	510185	Resistor—carbon 470,000 Ohms ½ watt
50	510193	Resistor—carbon 2.2 Meg. ½ watt
51	510173	Resistor—carbon 100,000 Ohms ½ watt
52	510155	Resistor—carbon 10,000 Ohms ½ watt
55	510137	Resistor—carbon 1000 Ohms ½ watt
57	510128	Resistor—carbon 330 Ohms ½ watt
59	510164	Resistor—carbon 33,000 Ohms ½ watt
62	510185	Resistor—carbon 470,000 Ohms ½ watt
63	510164	Resistor—carbon 33,000 Ohms ½ watt
68, 69	510154	Resistor—carbon 10,000 Ohms ±10% ½ w
72-A, B	508229	Volume control—1 Meg. (with switch)
74	510132	Resistor—carbon 560 Ohms ±10% ½ w
79	510207	Resistor—carbon 22 Ohms 1 watt
81	510193	Resistor—carbon 2.2 Meg. ½ watt
86	510191	Resistor—carbon 1 Meg. ½ watt
87	510173	Resistor—carbon 100,000 Ohms ½ watt
89-A	505858	Resistor—carbon 470,000 Ohms 1/3 watt (part of audio coupling unit)
89-D	505858	Resistor—carbon 470,000 Ohms 1/3 watt (part of audio coupling unit)
90	510158	Resistor—carbon 15,000 Ohms ½ watt
94	510222	Resistor—carbon 150 Ohms 1 watt
97	510337	Resistor—carbon 1000 Ohms 2 watt
		COILS AND TRANSFORMERS
11	508234	Loop antenna
18	507586	Coil—choke
21	507935	Coil—choke
22	508225	Coil—FM oscillator
23	507939	Coil—AM oscillator
27	508224	Coil—FM R.F.
33	507586	Coil—choke
36	507943	Transformer—1st FM I.F.
37	505867	Transformer—1st AM I.F.
44	505905	Transformer—2nd FM I.F.
45	505867	Transformer—2nd AM I.F.
56	507945	Transformer—discriminator
66, 67	507934	Coil—choke
98	507937	Transformer—output
		OTHER ELECTRICAL PARTS
19-A, B	508231	Switch—PHO-FM-AM
47-A, B, C	506338	Diode Filter Unit A—Condenser—ceramic 100 Mmfd. 400 volt; B—Resistor—carbon 47,000 Ohms 1/3 watt; C—Condenser—ceramic 100 Mmfd. 400 volt
75	506183	Lamp—dial 115 volt, 10 watt
89-A to D	505858	Audio Coupling Unit A—Resistor—carbon 470,000 Ohms 1/3 watt; B—Condenser—ceramic 250 Mmfd. 450 volt; C—Condenser—ceramic .005 Mfd. 450 volt; D—Resistor—carbon 470,000 Ohms 1/3 watt
82	504972	Rectifier—selenium
99	508226	Speaker—P.M. Dynamic (6")
		MISCELLANEOUS PARTS
	508237	Back for cabinet (less power cord)
	162106	Bracket and shield for dial light mounting
	508710	Cabinet
	506343	Clip for mtg. AM oscillator coil
	505101	Clip for mtg. I.F. transformer and FM sound discriminator
	508233	Clip—mounts electrolytic condenser
	114955	Clip—retainer on end of dial cord
	508235	Clip—retains cabinet back & loop antenna
	506431	Clip—retains tuning sleeve
	117057	Cord—dial drive (3½ ft. required)
	508236	Dial scale (plastic)
	508248	Escutcheon—for controls
	508230	Insulator insert for control shaft
	508221	Insulator insert for mounting chassis
	508227	Insulator insert for power cord interlock socket
	508240	Knob—"PHO FM AM" (brown)
	508239	Knob—"TUNE" (tan)
	508238	Knob—"VOLUME OFF" (brown and tan)
	508241	Pointer
	507699	Power cord assembly (includes plugs at both ends)
	119087	Ring for dial cord
	170818	Screw—#8-32 x 5/8"; mounts chassis
	508232	Sleeve, tuning
	506460	Socket—dial light (with leads)
	507932	Socket—male, power cord interlock
	507364	Socket—miniature (7 pin)
	506576	Socket—miniature (7 pin) (for 6BE6)
	506331	Socket—miniature (9 pin) (for 12AT7)
	161384	Spring—dial cord tension
	507933	Terminal strip—antenna connections and phono socket

©John F. Rider
Compliments of www.nucow.com

MODELS 9152-A, 9152-B, 9152-C

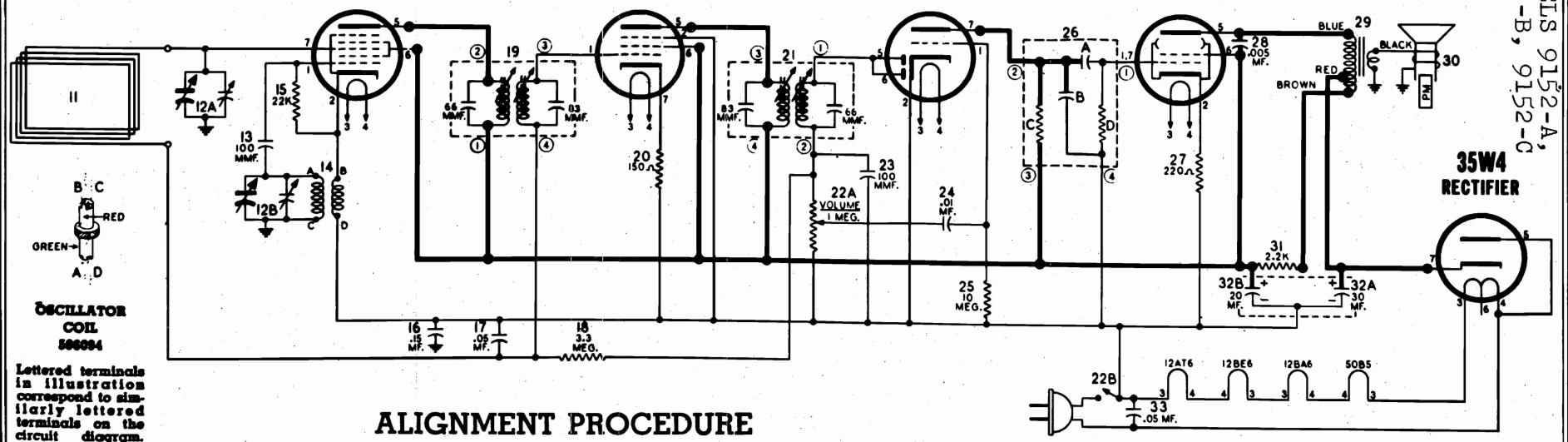

ALIGNMENT PROCEDURE

I.F. 455 KC.

1. Remove chassis and loop antenna (mounted to chassis) from cabinet allow loop to remain attached to chassis.
2. Replace the dial scale on the shaft of the gang condenser.
3. Since the "position indicator" for the dial scale is an integral part of the cabinet, it becomes necessary to install a "temporary pointer" when the chassis is removed from the cabinet. This can readily be accomplished by securing a piece of heavy wire under the right front gang condenser mounting screw and shaping the free end of the wire so that it can be placed in a **vertical** position directly in front of the dial scale. With the gang condenser fully meshed, the "temporary pointer" should appear directly in front of the fine line preceding "55" on the dial scale.
4. Couple the signal generator to the receiver by connecting its output to several turns of wire formed in a circular shape so that it may be placed adjacent and parallel to the receiver loop antenna.
5. Connect an output meter across the speaker voice coil or from the plate of the 50B5 tube to B - through a 0.1 Mfd. condenser.
6. Set volume control at maximum volume position and use a weak signal from the signal generator.

DUMMY ANT. IN SERIES WITH SIGNAL GENERATOR	SIGNAL GENERATOR CONNECTION	SIGNAL GENERATOR FREQUENCY	RECEIVER DIAL SETTING	TRIMMER OR SLUG NUMBER	TRIMMER DESCRIPTION	TYPE OF ADJUSTMENT
None	Connect directly to coupling turn as instructed in Step 4 above	455 KC	Any point where it does not affect the signal.	1-2	2nd I.F.	Adjust for maximum output. Then repeat adjustment.
				3-4	1st I.F.	
None	Connect directly to coupling turn as instructed in Step 4 above	1400 KC	1400 KC	5	Broadcast Oscillator	Adjust for maximum output.
None	Connect directly to coupling turn as instructed in Step 4 above	1400 KC	Tune to 1400 KC generator signal.	6	Broadcast Antenna	Adjust for maximum output.

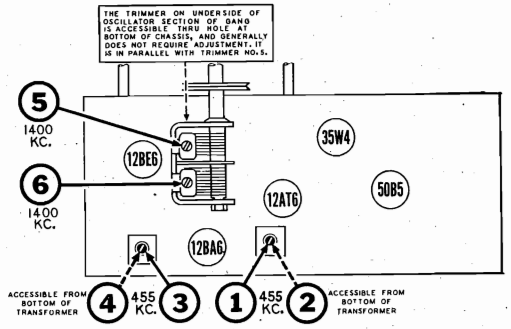

TRIMMER LOCATIONS

©John F. Rider

Compliments of www.nucow.com

MODELS 9152-A, 9152-B, 9152-C

STAGE GAIN MEASUREMENT PROCEDURE

REQUIRED INSTRUMENTS: The amount of amplification or "gain" of each of the stages of this receiver may be measured with an A.C. Vacuum Tube Voltmeter or a "channel" type instrument containing a tuned and calibrated amplifier.

PROCEDURE: It is exceedingly important to adhere to the procedure outlined below since the accuracy of these measurements will be affected to a considerable extent by the failure to establish proper operating conditions.

1. Be sure that R.F. and I.F. stages are carefully and accurately aligned by utilizing the alignment procedure given above.
2. Connect Signal Generator as shown below.
3. The values of stage gain which are given here were measured with a fixed bias of 3 volts on the control grids of all R.F. and I.F. tubes which are connected to the A.V.C. circuit. Therefore, these values are not intended to indicate the full capability of a stage but they will serve as a convenient basis for determining proper operation. In order to duplicate the fixed bias voltage, connect the negative terminal of a 3 volt battery to A.V.C. at terminal #4 of the 1st I.F. transformer and connect the positive battery lead to B— in receiver chassis.
4. Set Signal Generator for operation at 600 Kc with 400 cycle modulation and carefully tune radio receiver to this signal by using an output meter to indicate peak output. If a local station interferes, set generator to a nearby frequency and re-tune the receiver.
5. R.F. and I.F. circuits are slightly de-tuned when contact is made with an instrument probe and this action, which is indicated by a change in the output meter reading, may seriously affect the gain measurement. Therefore, it is important to adjust the associated circuit trimmer for a maximum output meter reading and to set the input signal level to a convenient reference point on the gain measuring instrument while the probe is making contact. After removing the probe it is again necessary to adjust the trimmer so as to obtain the same output meter reading and thereby assure that the signal voltage at the specified point has not changed as a result of circuit de-tuning.
6. When using a "channel" type instrument, carefully tune it for maximum output at desired frequency before making measurements.

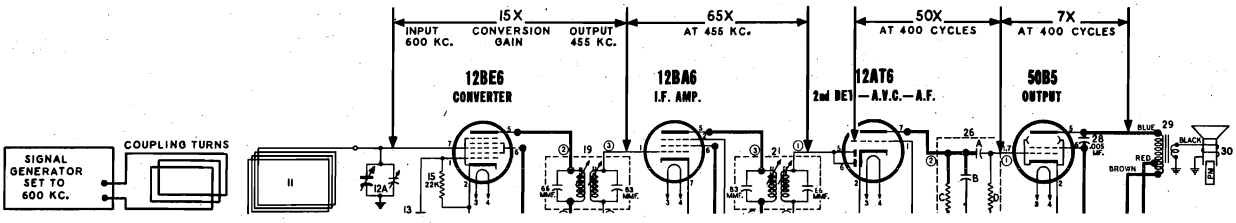

DIFFERENCES in tube characteristics, tolerance of parts, adjustment of tuned circuits and variations in line voltage will influence stage gain. These factors should be given due attention in event the gain of a stage varies extensively from the values shown above.

PARTS LIST

ORDER PARTS FROM YOUR STEWART-WARNER DISTRIBUTOR ONLY

DIA-GRAM NO.	PART NO.	DESCRIPTION
		CONDENSERS
12-A, B	508143	Condenser—variable gang (with drum)
13	512503	Condenser—mica 100 Mmfd. 500 volt
16	512040	Condenser—.15 Mfd. 400 volt
17	512028	Condenser—.05 Mfd. 400 volt
23	512503	Condenser—mica 100 Mmfd. 500 volt
24	512010	Condenser—.01 Mfd. 400 volt
26-A	505858	Condenser—ceramic .005 Mfd. 450 volt (part of audio coupling unit)
26-B	505858	Condenser—ceramic 250 Mmfd. 450 volt (part of audio coupling unit)
28	512006	Condenser—.005 Mfd. 600 volt
32-A, B	508147	Condenser—electrolytic A—30 Mfd. 150 volt; B—20 Mfd. 150 volt
33	512030	Condenser—.05 Mfd. 600 volt
		RESISTORS
15	510161	Resistor—carbon 22,000 Ohms ½ watt
18	510194	Resistor—carbon 3.3 Meg. ½ watt
20	510122	Resistor—carbon 150 Ohms ½ watt
22-A, B	506087	Volume control 1 Meg. (with switch)
25	510197	Resistor—carbon 10 Meg. ½ watt
26-C, D	505858	Resistor—carbon 470,000 Ohms 1/5 watt (part of audio coupling unit)
27	510125	Resistor—carbon 220 Ohms ½ watt
31	510243	Resistor—carbon 2,200 Ohms 1 watt
		OTHER ELECTRICAL PARTS
11	508148	Loop Antenna
14	506094	Coil—oscillator
19	505867	Transformer—1st I.F.
21	505867	Transformer—2nd I.F.
26	505858	Audio coupling unit: A—Condenser—ceramic .005 Mfd. 450 volt; B—Condenser—ceramic 250 Mmfd. 450 volt; C—Resistor—carbon 470,000 Ohms 1/5 watt; D—Resistor—carbon 470,000 Ohms 1/5 watt
29	508146	Transformer—output
30	506079	Speaker—P.M. dynamic (4 inch)
		MISCELLANEOUS
	508244	Back for cabinet
	508245	Background for dial (foil)
	505165	"C" washer for tuning shaft
	508643	Cabinet—Model 9152-A
	508644	Cabinet—Model 9152-B
	508645	Cabinet—Model 9152-C
	505101	Clip for mounting I.F. transformer
	508149	Clip for mounting loop antenna
	114955	Clip—retainer on end of dial cord
	508235	Clip—retains cabinet back
	117057	Cord—dial drive (2 ft. required) per ft.
	508246	Dial scale
	508248	Escutcheon—for controls
	508247	Knob—green; Models 9152-A and 9152-C
	508658	Knob—brown; Model 9152-B
	18785	Screw #8x7/8" chassis mounting
	506085	Shaft—tuning
	507364	Socket—miniature (7 pin)
	505161	Spring (dial cord tension)

SOCKET VOLTAGES

Measured with voltmeter having sensitivity of 1000 ohms per volt except where indicated by (*). The (*) symbol designates a vacuum tube voltmeter measurement.

LOOP ANTENNA TERMINALS SHORTED TOGETHER

VOLUME ON FULL WITH NO SIGNAL — DIAL TUNED TO 540 KC.

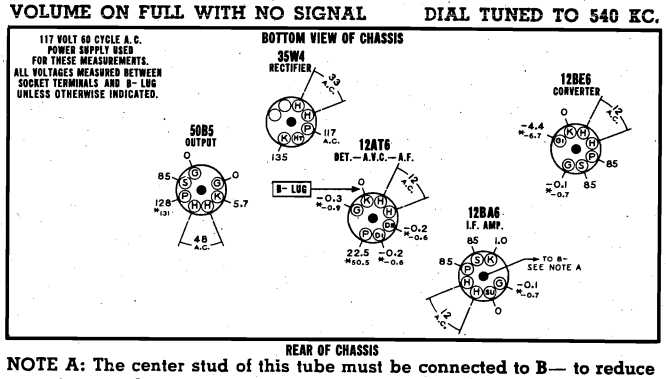

NOTE A: The center stud of this tube must be connected to B— to reduce capacity coupling between other pins. Oscillation may result if this connection is omitted.

DRIVE CORD ARRANGEMENT

To string dial cord, turn the main drive drum to maximum counter - clockwise position and use following parts:

114955 Clip on end of cord

117057 Cord (2 feet)

505161 Tension Spring

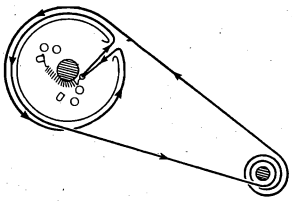

©John F. Rider

Compliments of www.nucow.com

MODEL 9153-A

GENERAL SPECIFICATIONS

FREQUENCY RANGE:

540 to 1600 KC.

TUNING CAPACITOR:

2 section gang, shock mounted, Planetary drive.

I.F. FREQUENCY:

455 KC.

ANTENNA:

High impedance loop.

POWER SUPPLY:

Power line Operation { 117 volts A.C. or D.C. 15 watts

Portable Operation { 1—67½ volt "B" Battery 5— 1½ volt "A" Batteries

POWER OUTPUT:

Undistorted—60 milliwatts

Maximum—110 milliwatts

SPEAKER:

4 inch P.M. Dynamic

Voice coil impedance—3.2 ohms

DIMENSIONS:

Length—9½"

Height—6⅞"

Depth—4¾"

WEIGHT:

7 pounds

HOW TO REMOVE CHASSIS FROM CABINET

1. Remove volume and the dual tuning knobs by pulling them forward.

2. To remove cabinet back first swing handle outward and note finger grip recess at back edge of cabinet. Grasp back at this recess and pull outward until it is free. Disconnect leads to loop antenna by slipping pin type connectors out of the electrical clips attached to loop.

3. Loosen set screw in hinge pin collar. Then, push hinge pin into one end of handle and withdraw it completely by pulling out of the other end.

4. Remove three chassis mounting screws, two of which are located along one edge and the other located on the opposite edge. To gain access to one of the chassis mounting screws it will first be necessary to remove "A" battery hold down plate as instructed on label attached to this plate.

5. Chassis is now free and may be lifted out of cabinet.

6. Bottom cover on chassis may be removed by taking out three screws at the sides.

©John F. Rider

Compliments of www.nucow.com

MODEL 9153-A

SOCKET VOLTAGES

THE VOLTAGES SHOWN IN THIS CHART WERE MEASURED UNDER THE FOLLOWING CONDITIONS

1. Power supply—117 V. 60 cycles, A.C.
2. All voltages were measured between socket terminals and B— unless otherwise indicated on the chart.
3. All measurements were made with a voltmeter having a sensitivity of 1000 Ohms per volt except where indicated by (*).

The (*) symbol designates a vacuum tube voltmeter measurement.

4. Receiver should be tuned to 540 KC.
5. Loop antenna terminals should be shorted together.
6. The volume control was set to maximum position with no signal.

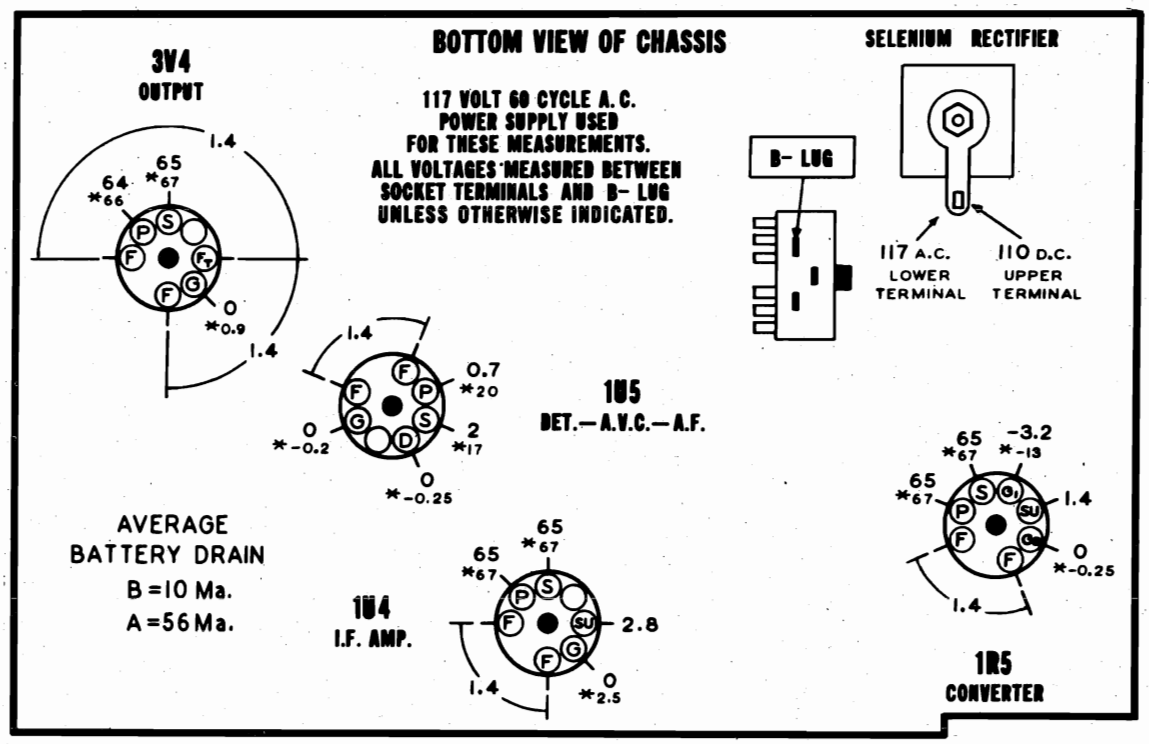

STAGE GAIN MEASUREMENT PROCEDURE

REQUIRED INSTRUMENTS: The amount of amplification or "gain" of each of the stages of this receiver may be measured with an A.C. Vacuum Tube Voltmeter or a "channel" type instrument containing a tuned and calibrated amplifier.

PROCEDURE: It is exceedingly important to adhere to the procedure outlined below since the accuracy of these measurements will be affected to a considerable extent by the failure to establish proper operating conditions.

1. Be sure that R.F. and I.F. stages are carefully and accurately aligned by utilizing the alignment procedure given on page 1950-118A.
2. Connect Signal Generator as shown below.
3. The values of stage gain which are given here were measured with a fixed bias of 1½ volts on the control grids of all R.F. and I.F. tubes which are connected to the A.V.C. circuit. Therefore, these values are not intended to indicate the full capability of a stage but they will serve as a convenient basis for determining proper operation. In order to duplicate the fixed bias voltage, connect the negative terminal of a 1½ volt battery to A.V.C. at frame of gang condenser and connect the positive battery lead to B- in receiver chassis.
4. Set Signal Generator for operation at 600 Kc. with 400 cycle modulation and carefully tune radio receiver to this signal by using an output meter to indicate peak output. If a local station interferes, set generator to a nearby frequency and re-tune the receiver.
5. R.F. and I.F. circuits are slightly de-tuned when contact is made with an instrument probe and this action, which is indicated by a change in the output meter reading, may seriously affect the gain measurement. Therefore, it is important to adjust the associated circuit trimmer for a maximum output meter reading and to set the input signal level to a convenient reference point on the gain measuring instrument while the probe is making contact. After removing the probe it is again necessary to adjust the trimmer so as to obtain the same output meter reading and thereby assure that the signal voltage at the specified point has not changed as a result of circuit de-tuning.
6. When using a "channel" type instrument, carefully tune it for maximum output at desired frequency before making measurements.

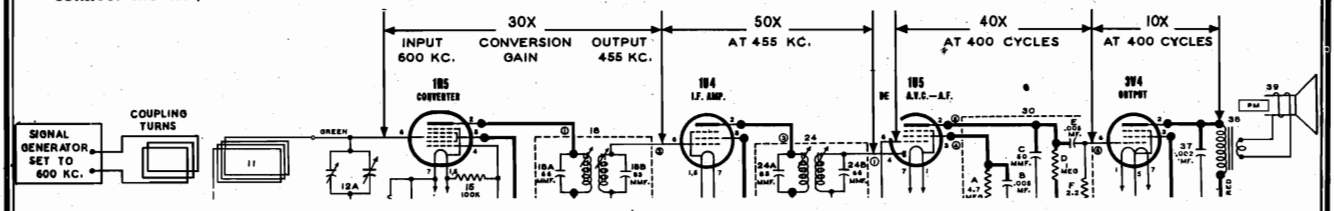

DIFFERENCES in tube characteristics, tolerance of parts, adjustment of tuned circuits and variations in line voltage will influence stage gain. These factors should be given due attention in event the gain of a stage varies extensively from the values shown above.

©John F. Rider

Compliments of www.nucow.com

MODEL 9153-A

ALIGNMENT PROCEDURE

1. Remove chassis from cabinet by following procedure described on page 117. Reconnect loop antenna leads to clips on cabinet back. As battery position slightly affects R.F. alignment, it is preferable to have batteries in proper place during this procedure.

2. Replace dial scale and tuning knob on shafts of the gang condenser.

3. Since the "position indicator" for the dial scale is an integral part of the cabinet, it becomes necessary to install a temporary pointer when the chassis is removed from the cabinet. This can readily be accomplished by securing a piece of heavy wire under the chassis bottom cover mounting screw and then shaping the free end of the wire so that it can be placed in a vertical position directly in front of the dial scale. The dial scale should be installed on the gang condenser shaft so that when the condenser is fully meshed the smaller 5 of the 55 on the scale is directly under the pointer.

4. In order to provide a coupling for the signal generator during R.F. alignment, wind several turns of wire in a circular shape so that it may be placed adjacent and parallel to the loop antenna. Position cabinet back so that loop antenna is in approximately the same position as when receiver is completely assembled.

5. Solder approximately 5 in. of insulated wire to each of "soldering lugs" on **secondary** of output transformer. Connect output meter to these extension leads.

6. Set volume control at maximum and use a weak signal from the signal generator.

7. Operate the receiver from a 117 V. AC or DC line.

SIGNAL GENERATOR CONNECTIONS		SIGNAL GENERATOR FREQUENCY	RECEIVER DIAL SETTING	TRIMMER OR SLUG NUMBER	TRIMMER DESCRIPTION	TYPE OF ADJUSTMENT
CONNECT HIGH SIDE OF SIGNAL GENERATOR TO	CONNECT GROUND LEAD OF SIGNAL GENERATOR TO					
Lug on trimmer #6 at side of gang (see chart below for location of trimmer).	B— lug in chassis. **CAUTION** If your signal generator is designed with an AC-DC type power supply, connect ground lead of signal generator to receiver through a .25 Mfd. condenser.	455 KC	Any point where it does not affect the signal.	1 and 2	2nd I.F.	Adjust for maximum output. Then repeat adjustment.
				3 and 4	1st I.F.	
Connect directly to coupling turn. See Step 4 above for instructions on coupling loop.		1400 KC	1400 KC See Step 3 above for instructions on how to obtain this calibration point.	5	Broadcast Oscillator	Adjust for maximum output.

IMPORTANT:—Before undertaking alignment of the antenna circuit it is necessary to reassemble the chassis in the cabinet. When reinstalling cabinet back be sure that extension leads previously soldered to secondary of output transformer extend through ventilation slot on edge of back. Now, replace back and be sure that it snaps into proper position. To gain access to antenna trimmer #6 it will be necessary to first lift off the snap button at bottom of cabinet. Now complete the alignment procedure as follows.

Connect directly to coupling turn. See Step 4 above for instructions on coupling loop.	1400 KC	Tune to 1400 Kc. generator signal.	6	Broadcast Antenna	Adjust for maximum output.

Open cabinet back and unsolder two extension leads attached to secondary of output transformer.

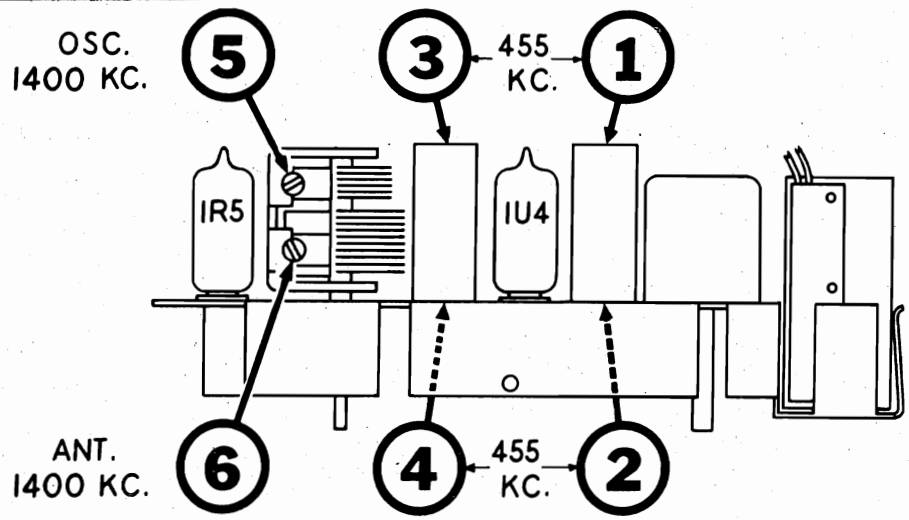

SIDE VIEW OF CHASSIS

©John F. Rider

Compliments of www.nucow.com

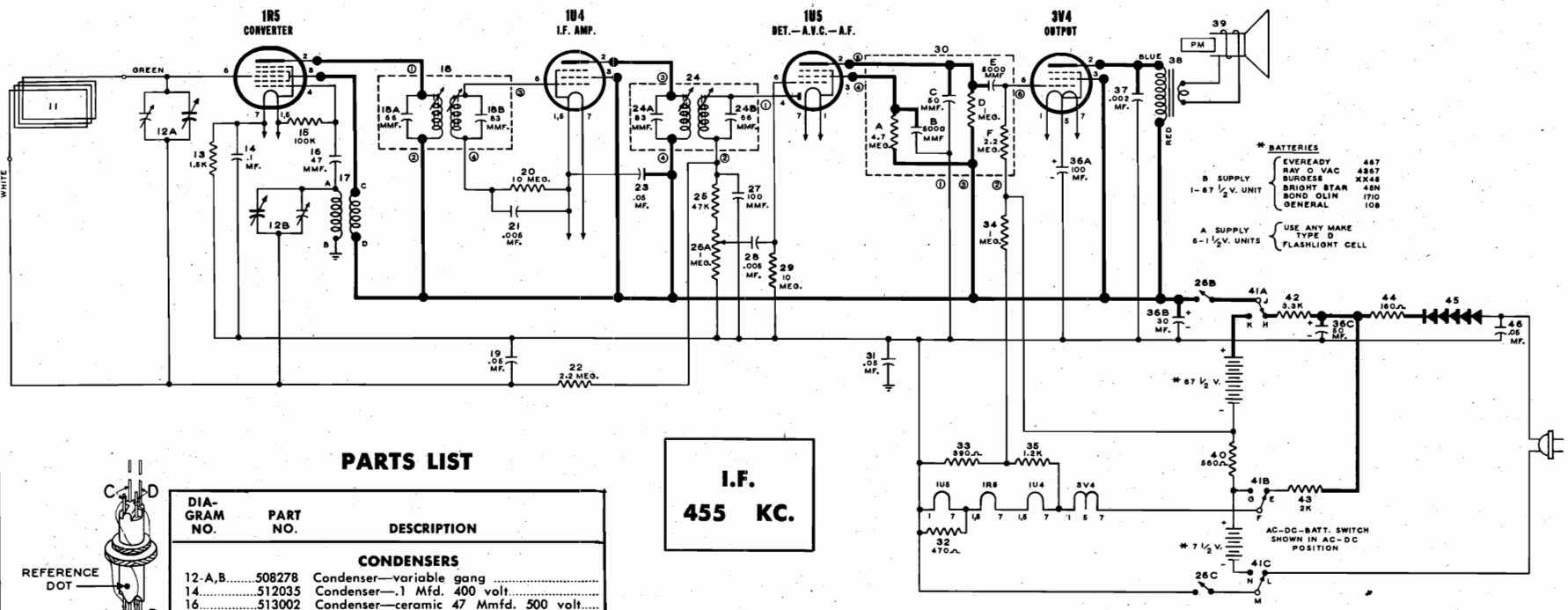

PARTS LIST

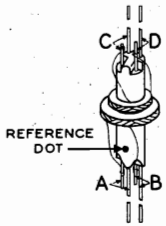

OSCILLATOR COIL 508306

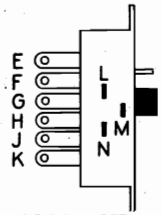

AC-DC—BATT. SWITCH 508258

Lettered terminals in illustrations correspond to similarly lettered terminals on the circuit diagram.

DIA-GRAM NO.	PART NO.	DESCRIPTION
		CONDENSERS
12-A,B	508278	Condenser—variable gang
14	512035	Condenser—.1 Mfd. 400 volt
16	513002	Condenser—ceramic 47 Mmfd. 500 volt
18-A	506809	Condenser—ceramic 66 Mmfd. (part of 1st I.F. transformer)
18-B	506809	Condenser—ceramic 83 Mmfd. (part of 1st I.F. transformer)
19	512027	Condenser—.05 Mfd. 200 volt
21	512007	Condenser—.005 Mfd. 600 volt
23	512027	Condenser—.05 Mfd. 200 volt
24-A	506809	Condenser—ceramic 83 Mmfd. (part of 2nd I.F. transformer)
24-B	506809	Condenser—ceramic 66 Mmfd. (part of 2nd I.F. transformer)
27	513003	Condenser—ceramic 100 Mmfd. 500 volt
28	512007	Condenser—.005 Mfd. 600 volt
30-B	508309	Condenser—ceramic 5000 Mmfd. (part of Audio Coupling Unit)
30-C	508309	Condenser—ceramic 50 Mmfd. (part of Audio Coupling Unit)
30-E	508309	Condenser—ceramic 5000 Mmfd. (part of Audio Coupling Unit)
31	512214	Condenser—.05 Mfd. 400 volt
36-A,B,C	508269	Condenser—electrolytic A—100 Mfd. 25 volt; B— 30 Mfd. 150 volt; C— 50 Mfd. 150 volt
37	512003	Condenser—.002 Mfd. 600 volt
46	512145	Condenser—.05 Mfd. 400 volt
		RESISTORS
13	510139	Resistor—carbon 1500 Ohms ± 10% ½ w.
15	510173	Resistor—carbon 100,000 Ohms ½ w.
20	510197	Resistor—carbon 10 Meg. ½ watt
22	510193	Resistor—carbon 2.2 Meg. ½ watt
25	510167	Resistor—carbon 47,000 Ohms ½ watt
26-A,B,C	508274	Volume control—1 Meg. (with switch)
29	510197	Resistor—carbon 10 Meg. ½ watt
30-A	508309	Resistor—carbon 4.7 Meg. (part of Audio Coupling Unit)
30-D	508309	Resistor—carbon 1 Meg. (part of Audio Coupling Unit)

I.F. 455 KC.

DIA-GRAM NO.	PART NO.	DESCRIPTION
30-F	508309	Resistor—carbon 2.2 Meg. (part of Audio Coupling Unit)
32	510310	Resistor—carbon 470 Ohms ± 10% ½ w.
33	510129	Resistor—carbon 390 Ohms ± 10% ½ w.
34	510191	Resistor—carbon 1 Meg. ½ watt
35	510138	Resistor—carbon 1200 Ohms ± 10% ½ w.
40	510132	Resistor—carbon 560 Ohms ± 10% ½ w.
42	510245	Resistor—carbon 3300 Ohms ± 10% 1 w.
43	510732	Resistor—wire wound 2000 Ohms ± 10% 10 watt
44	510731	Resistor—wire wound 160 Ohm ± 10% 3 watt
		COILS AND TRANSFORMERS
11	508312	Loop antenna
17	508306	Coil—oscillator
18	506809	Transformers—1st I.F. (includes condensers 18-A and 18-B)
24	506809	Transformer—2nd I.F. (includes condensers 24-A and 24-B)
38	508271	Transformer—output
		OTHER ELECTRICAL PARTS
30-A to F	508309	Audio coupling unit A—Resistor—carbon 4.7 Meg. B—Condenser—ceramic 5000 Mmfd. C—Condenser—ceramic 50 Mmfd. D—Resistor—carbon 1 Meg. E—Condenser—ceramic 5000 Mmfd. F—Resistor—carbon 2.2 Meg.

DIA-GRAM NO.	PART NO.	DESCRIPTION
39	508255	Speaker—P.M. dynamic (4 inch)
41-A,B,C	508258	Switch—"AC-DC—Batt."
45	508305	Selenium rectifier
		MISCELLANEOUS PARTS
	508301	Back for cabinet
	504981	Base far mtg. electrolytic condenser
	509042	Cabinet (less handle and back)
	162119	Chassis bottom cover
	505101	Clip for mtg. I.F. transformer
	508257	Clip for mtg. power cord retainer
	130931	Clip for retaining back cover to cabinet
	509057	Collar and set screw for hinge pin
	508310	Connector for "B" battery (includes leads)
	508319	Dial scale
	508316	Escutcheon for knobs
	508302	Handle
	508313	Hinge pin for handle
	508317	Knob—"OFF VOLUME"
	508318	Knob—tuning
	162115	Plate and contacts for retaining "A" batteries
	508304	Retainer for power cord (fibre tube)
	508277	Shield for volume control
	507364	Socket—miniature (7 pin)

©John F. Rider

Compliments of www.nucow.com

Compliments of www.nucow.com

SPECIFICATIONS

Voltage Rating — Radio	117 Volts AC-DC
Type of Circuit	Superheterodyne
Tuning Range	540-1640 Kc
Input Power Rating	30 Watts
Intermediate Frequency	455 Kc
Speaker Voice Coil Impedance	3 Ohm
Power Output	1.5 Watts at 10% Distortion

TUBE COMPLEMENT

2 12BA6 Miniature RF and IF Amplifier

1 12BE6 Miniature Converter

1 12AV6 Miniature Detector, AVC and Audio Driver

1 50L6GT Power Output

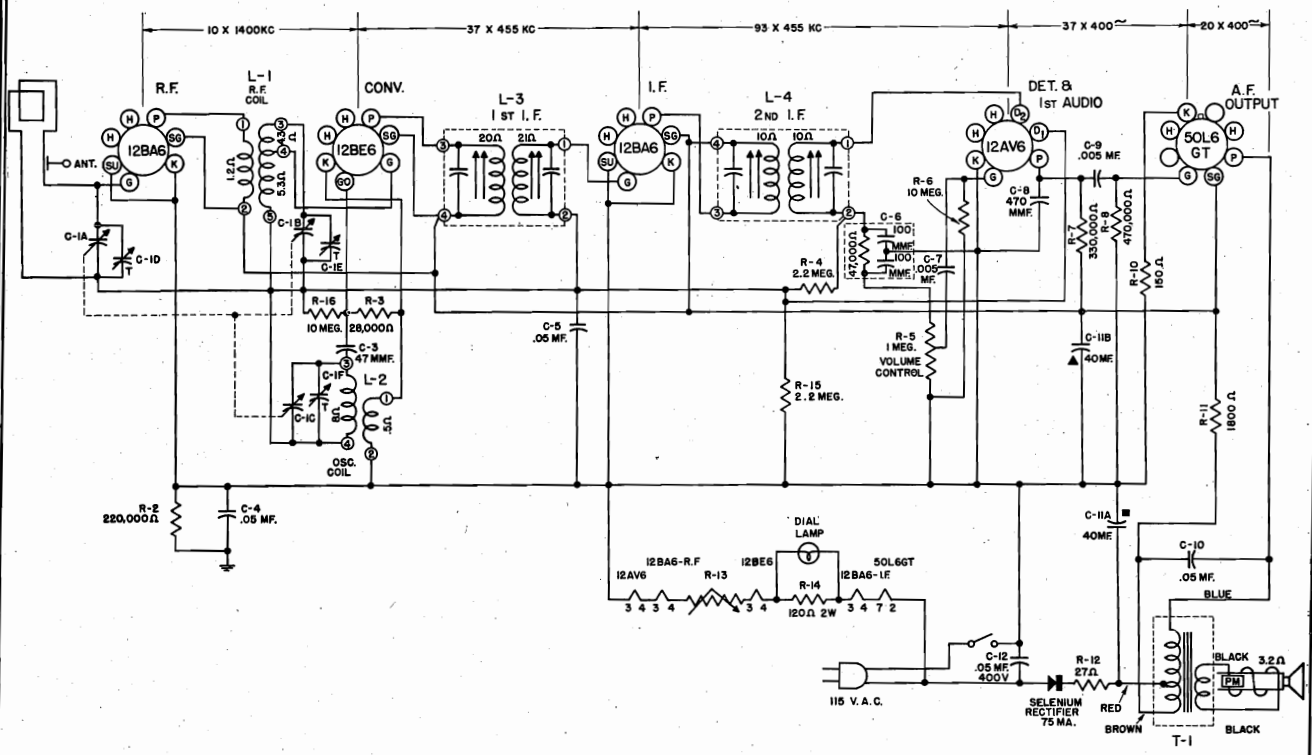

Voltage and Tube Location Chart

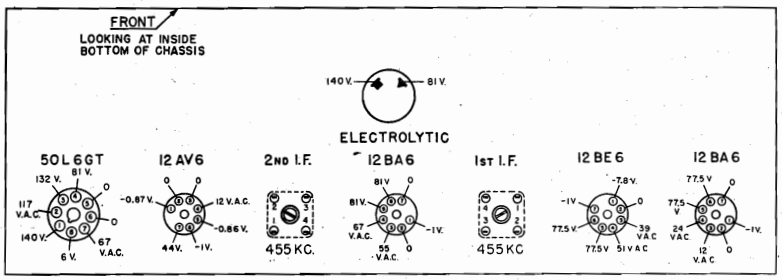

Measurements are made at 117V line, using electronic Voltmeter. Except where otherwise indicated, volages are D.C. and are positive with respect to the reference point which is the common Black-White lead.

©John F. Rider

Compliments of www.nucow.com

MODEL 1500

ALIGNMENT PROCEDURE

CAUTION: As this is a transformless Receiver, observe all usual precautions. The Black-White (B-) lead is common to one side of the 117 Volt Power Line Cord.

Pointer Setting	Generator Setting	Input and Dummy	VTVM and Scope Connection and Scale	Adj. and Notes
I. F. ADJUSTMENT				
(1) Low frequency end of dial	455 kc. 400 cy. mod.	Pin #7, 12BE6 tube 0.01 mfd. dummy	-3V DC Scale Green-White (AVC) lead and Black-White (B-) lead.	Adj. top and bottom cores of each I. F. transformer with non-metallic screwdriver for maximum voltage.
(2) "	455 kc. Swept 15 kc.	"	Scope to Junction C-6 and Volume Control	Adj. same cores as above for best over-lapping curve on scope.
R. F. ADJUSTMENT				
(1) 1650 kc. Condenser plates all way out	1650 kc. 400 cy. mod.	Ant. terminal 0.01 mfd. dummy	"	Adj. Osc. (front) trimmer on variable condenser for maximum voltage.
(2) 1400 kc.	1400 kc. 400 cy. mod.	"	"	Adj. R. F. and Loop trimmers on variable condenser for maximum voltage.

Circuit Symbol	S-C Part No.	Capacity	Voltage
C-1	110026	Variable	
C-3	110458	47 MMF	400 V
C-4	40632	.05 MF	400 V
C-5	40632	.05 MF	400 V
C-6	110478	Diode Filter	
C-7	27760	.005 MF	600 V
C-8	110464	470 MMF	400 V
C-9	27760	.005 MF	600 V
C-10	40632	.05 MF	400 V
C-11	111032	2-40 MF	200 V
C-12	40632	.05 MF	400 V

Circuit Symbol	S-C Part No.	Description
L-1	114055	RF COIL ASSEMBLY
L-2	114056	OSC. COIL ASSEMBLY
L-3	114336	1st IF TRANSFORMER
L-4	114337	2nd IF TRANSFORMER
T-1	161413	OUTPUT TRANSFORMER

Circuit Symbol	S-C Part No.	Resistance	Watt	Tol.
R-2	149115	220K ohms	½	20%
R-3	149109	22K ohms	½	20%
R-4	149121	2.2 megohms	½	20%
R-5	145032	1 megohm		Pot.
R-6	149125	10 megohms	½	20%
R-7	149116	330K ohms	½	20%
R-8	149117	470K ohms	½	20%
R-10	28148	150 ohms	½	10%
R-11	149047	1800 ohms	2	10%
R-12	149244	27 ohms	2	10%
R-13	149243	Special NTC		
R-14	149035	120 ohms	2	10%
R-15	149121	2.2 megohms	½	20%
R-16	149125	10 megohms	½	20%

Miscellaneous

139035	LOOP ASSEMBLY
117008	POWER CORD
122032	DIAL LENS
124016	DIAL DRIVE CORD
144018	POINTER
30933	PILOT LAMP
152096	PILOT LIGHT SOCKET
152040	SOCKET 7-PT. MIN.
152041	SOCKET 8-PT. OCTAL.
162034	SELENIUM RECTIFIER — 75 MA
108065	WALNUT CABINET
134004	BROWN KNOB
108066	IVORY CABINET
134005	IVORY KNOB
108169	RED CABINET
134137	BLACK KNOB
108170	TAN CABINET
155187	SPEAKER

©John F. Rider

Compliments of www.nucow.com

MODEL 5022

POWER SOURCES: This receiver is designed for operation on either an external power source or on the enclosed batteries.

AC OR DC OPERATION: This receiver may be operated on 50 to 60 cycle, 110 to 125 volt AC current or 110 to 125 DC current.

CAUTION: Never plug this receiver into a 220 volt line as this will seriously damage the component parts which have been designed for 110 to 125 volt operation only.

To operate on AC or DC open the small door at the right in the back of the cabinet. Pull out the power cord and plug into a convenient outlet of the proper voltage and current. Follow instructions under "Controls."

To operate on the enclosed batteries, follow instructions under "Controls."

ANTENNA: This receiver is equipped with a sensitive loop antenna and requires no external antenna wire. However, due to the directional qualities of the loop some stations may appear to be weak in reception. This condition may be remedied by rotating or changing the position of the receiver.

CONTROLS: This receiver has three control knobs which are located on the front panel of the cabinet.

STATION SELECTOR KNOB: The center knob is the station selector. Rotate this knob to the right or left to select your desired station. The dial scale is calibrated in kilocycles. By mentally adding a zero to the numbers on the scale, the result will be read directly in (KC) kilocycles. (i.e., 60 plus 0 equals 600 KC or 140 plus 0 equals 1400 KC).

POWER SELECTOR SWITCH: The right hand knob is the power selector. It has three positions which are indicated on the front panel. The extreme left hand position is the "OFF" position. The small dot on this knob must point to "OFF" when the receiver is not in use. The center position is "AC-DC" and is used when it is desired to operate the receiver from a power line source. The extreme right hand position is "BATT" and is used when it is desired to operate on the enclosed batteries.

AC OPERATION: When an AC power source is used, set the power selector knob to "AC-DC" after the power cord has been plugged into a convenient outlet. The receiver is now ready for operation.

DC OPERATION: If the receiver does not operate after a few seconds, reverse the power cord plug in the outlet and it will operate properly.

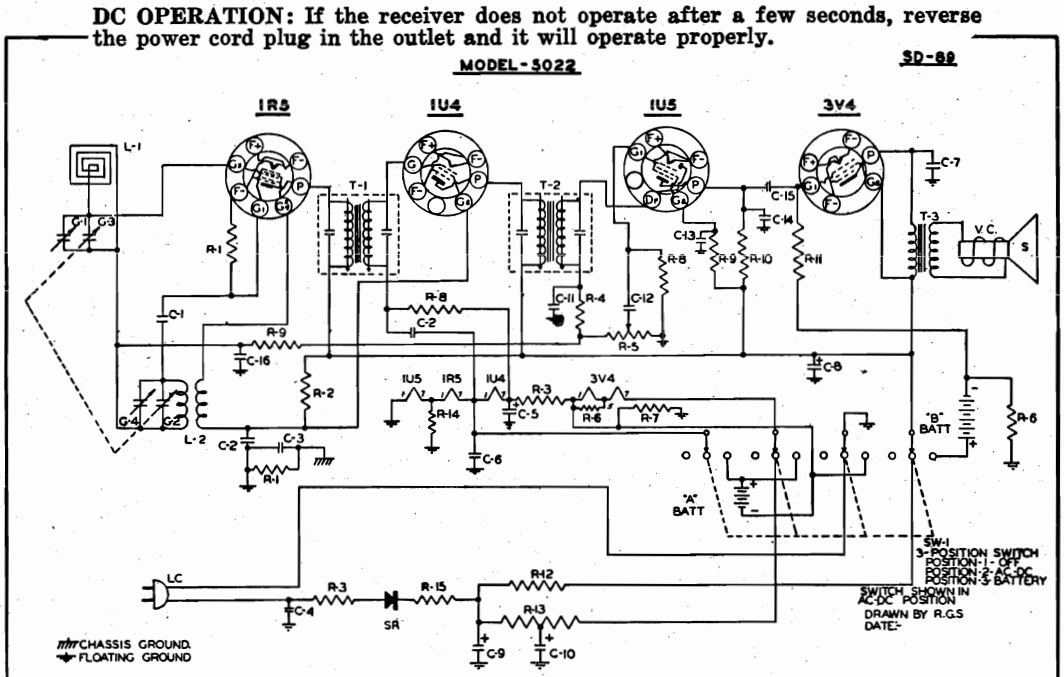

PART NO.		DESCRIPTION	PART NO.		DESCRIPTION	PART NO.		DESCRIPTION
IR-20	R-1	220M RESISTOR 1/2W 20 %	PC-3	C-6	.1 MFD. CONDENSER 200 W.V.	LI-5	T-1	INPUT IF TRANSFORMER
IR-37	R-2	10M RESISTOR 1/2W 20 %	PC-6	C-7	.005MFD. CONDENSER 600 W.V.	LI-5	T-2	OUTPUT IF TRANSFORMER
IR-17	R-3	33 RESISTOR 1/2W 20 %	EC-14	C-8	40 MFD.	SPK-16	T-3	SPEAKER OUTPUT TRANSFORMER
IR-31	R-4	82M RESISTOR 1/2W 10 %		C-9	40 MFD. 150 W.V. ELECTROLYTIC		V.C.	VOICE COIL
VC-11	R-5	1MEG. VOLUME CONTROL		C-10	20 MFD.		S.	3½ P.M. SPEAKER
IR-33	R-6	270 RESISTOR 1/2W 10 %		C-11	1.50MMFD.		G-4	OSC TRIMMER
IR-39	R-7	620 RESISTOR 1/2W 5 %		C-12	.002MFD.			
IR-3	R-8	10MEG. RESISTOR 1/2W 20 %	MC-7	C-13	.005MFD.	TU-39	—	IR5-1U4-1U5-3V4
IR-23	R-9	3.3MEG. RESISTOR 1/2W 20 %		C-14	100 MFD.			
IR-12	R-10	1MEG. RESISTOR 1/2W 20 %		C-15	.005MFD.			
IR-13	R-11	2.2MEG. RESISTOR 1/2W 20 %	PC-2	C-16	.05MFD. CONDENSER 200 W.V.			
IR-40	R-12	3900 RESISTOR 1W 10 %		G-1	ANT. TRIMMER			
WR-7	R-13	1050-1050 CANDOHM RESISTOR 5W. 5 %	GC-6	G-2	GANG CONDENSER			
IR-1	R-14	470 RESISTOR 1/2W 20 %		G-3				
IR-41	R-15	47 RESISTOR 1W 10 %	LL-23	L-1	LOOP ANTENNA			
			LO-8	L-2	OSC. COIL			
MC-2	C-1	100MMFD. MICA CONDENSER	SR-2	SR	SELENIUM RECTIFIER			
PC-7	C-2	.01MFD. CONDENSER 400 W.V.	CO-1	LC	LINE CORD			
PC-8	C-3	.1 MFD. CONDENSER 400 W.V.	SW-8	SW-1	4 POLE 3 POSITION SWITCH			
PC-5	C-4	.05 MFD. CONDENSER 400 W.V.		"A" BATT	2 "D" SIZE FLASHLITE CELLS, 1½ VOLTS			
EC-6	C-5	70MFD. 10WV ELECTROLYTIC		"B" BATT	1-67½ VOLT BATTERY			

©John F. Rider

Compliments of www.nucow.com

BATTERY OPERATION: The power cord is not used for battery operation and may be hanked and put back in the cabinet. Set the power control knob to "BATT" and the receiver is ready for operation on the enclosed batteries.

CAUTION: When the receiver is not in use, the power selector knob must be turned to "OFF." If the knob is allowed to remain in "BATT" position, the batteries will be in use constantly. The volume control does not control the batteries and they are still in operation even though the volume control is turned all the way off.

VOLUME CONTROL: The left hand knob is the volume control. After the power selector knob has been properly set and the receiver is in operation, rotate the volume control knob to the right to increase volume or to the left to decrease volume.

BATTERY SUPPLIERS

The batteries for this receiver may be purchased from any reliable dealer.

For proper operation this receiver requires two "A" batteries and one "B" battery.

The "A" batteries are size "D" flashlight cells and are made by all battery manufacturers.

The "B" battery is a 67½ volt battery and is made by the following manufacturers.

Eveready 67½ vlt. #467

Burgess 67½ vlt. #XX45

General 67½ vlt. #W45A

Ray-O-Vac 67½ vlt. #4367

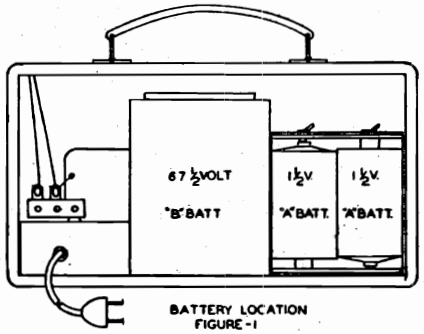

BATTERY LOCATION
FIGURE-1

BATTERY SERVICING (See Fig. No. 1)

To replace the batteries in this receiver. Remove the back.

To the right, looking into the rear of the cabinet is the "A" or flashlight battery container. To the left is the "B" or 67½ volt battery.

To replace the "A" batteries, pull the old batteries out of the container. Replace with fresh batteries, making sure the batteries are inserted according to the diagram on the inside of the container.

To replace the "B" battery, disconnect the snap fastener connectors. Replace with a fresh battery and snap the connectors into place. Replace the battery in the cabinet as shown in Fig. No. 1, making sure that the connector end faces the top of the cabinet.

After the batteries have been installed, replace the back, making sure that the two washers in the bottom of the back fit into the slot near the bottom edge of the cabinet.

ALIGNMENT AND SERVICE DATA

(See Fig. No. 2 For Trimmer Location)

Remove chassis from cabinet for alignment.

A Signal Generator is required having the following frequencies: 455 KC, 1400 KC, 1650 KC. An output meter should be connected across the speaker.

The volume control of the receiver should be turned to maximum during the I. F. and all subsequent alignment and the generator output as low as possible to prevent the A. V. C. from working and giving false readings.

FIRST STEP: Connect the hot lead from the generator to the ANT. Section of the gang condenser through a .1 MFD. condenser. The ground lead from the generator must be connected to "B" minus under the chassis. Turn the gang condenser to complete minimum capacity. Set the generator to 455 KC. Adjust the movable iron cores in the IF cans. These IF adjustments are made in the top and in the bottom of the can under the chassis. Adjust the cores until a maximum reading is noted on the output meter.

SECOND STEP: With the leads from the generator still connected in the same manner, adjust the Signal Generator to 1650 KC. Adjust the OSC. trimmer until the 1650 KC signal is tuned in. The gang condenser must be at complete minimum capacity for this adjustment.

THIRD STEP: Remove the generator leads from the gang condenser and replace the chassis in the cabinet. Loosely couple the generator to the receiver loop by making a complete turn of wire over the outside of the cabinet. With the receiver and generator set at 1400 KC, increase the generator output. Adjust the ANT. trimmer through the hole which is provided in the end of the cabinet until a maximum signal is noted on the output meter. The ANT. trimmer hole in the side of the cabinet is covered by a small plug button. Replace this button after adjustment has been made. No further adjustment should be made as the coils and gang condenser in this receiver have been specially handled at the factory to insure proper alignment at the lower frequencies.

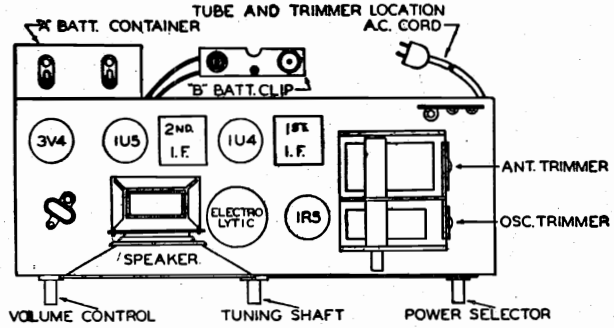

MODEL-5022
FIGURE-2 TL-89

WARRANTY

This receiver has been carefully tested and was shipped from our factory in perfect operating condition. If the set arrives damaged in any way, it is important that you file claim immediately against the carrier. We warrant this receiver to be free from defective materials and workmanship. We agree to exchange any part, which under normal use, becomes defective within a period of 90 (ninety) days from the date of sale to the original purchaser. If this receiver does not operate, it should be returned for service to the dealer from whom it was purchased.

This warranty does not apply if the receiver has been damaged, tampered with, or misused. If the receiver is returned to the factory, transportation charges must be prepaid. No receiver may be returned without our written consent.

©John F. Rider
Compliments of www.nucow.com

MODELS 5060, 5061

SCHEMATIC DIAGRAM — MODELS 5060 and 5061

MODELS-5060-5061

SD-92-U

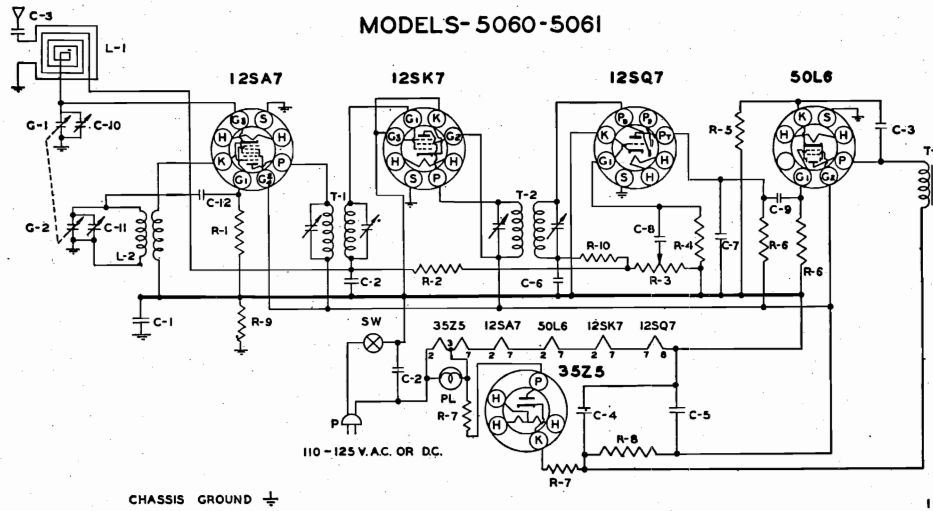

PART NO.		DESCRIPTION
1R-9	R-1	22000 Ω RESISTOR 1/2W 20 %
1R-23	R-2	3.3MEG. RESISTOR 1/2W 20 %
VC-3	R-3	1MEG. VOLUME CONTROL
1R-13	R-4	2.2MEG. RESISTOR 1/2W 20 %
1R-14	R-5	150 Ω RESISTOR 1/2W 20 %
1R-11	R-6	470M Ω RESISTOR 1/2W 20%
1R-17	R-7	33 Ω RESISTOR 1/2W 20%
1R-25	R-8	2200 Ω RESISTOR 1 W 10%
1R-20	R-9	220M Ω RESISTOR 1/2W 20%
1R-10	R-10	47000 Ω RESISTOR 1/2W 20%
PC-8	C-1	.1MFD. CONDENSER 400 V.
PC-5	C-2	.05MFD. CONDENSER 400 V.
PC-7	C-3	.01 MFD. CONDENSER 400 V.
EC-12	C-4	40MFD. 150 V. ELECTROLYTIC
	C-5	20MFD.
MC-8	C-6	220MMFD.
	C-7	220MMFD.
	C-8	.002MFD.
	C-9	.005MFD.
	C-10	ANT. TRIMMER.
	C-11	OSC. TRIMMER
MC-4	C-12	50MMFD. MICA CONDENSER
GC-6A	G-1	GANG CONDENSER
	G-2	
LL-6	L-1	LOOP ANTENNA
LO-13	L-2	OSC. COIL
LI-6	T-1	INPUT I.F. TRANSFORMER
LI-7	T-2	OUTPUT I.F. TRANSFORMER.
SPK-12B	T-3	SPEAKER OUTPUT TRANSFORMER
	V.C.	VOICE COIL.
	S	P.M. SPEAKER
PB-1	PL	#47 PILOT BULB
	SW	A.C. SWITCH ON VOLUME CONTROL
CO-1	P	LINE CORD

MODELS 5060-5061
TUBE AND TRIMMER LOCATION

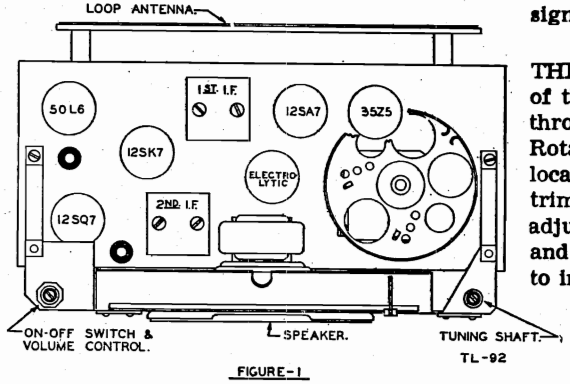

FIGURE-1

ALIGNMENT AND SERVICE DATA

Remove chassis from cabinet for alignment.

A Signal Generator is required having the following frequencies: 455 KC, 1400 KC, 1720 KC. An output meter should be connected across the speaker.

The receiver volume control should be turned to maximum during the I.F. and all subsequent alignments to keep the AVC from working and giving false readings. Keep the generator output as low as possible to prevent overloading.

FIRST STEP: Connect the hot lead from the generator to the ANT. section of the gang condenser, through a .1 MFD condenser. The ground lead from the generator must be connected to the floating ground buss under the chassis. Turn the gang condenser to complete minimum capacity. Adjust the generator to 455KC and adjust the trimmers of the 1st and 2nd I.F. transformers until a maximum reading is noted on the output meter.

SECOND STEP: With the leads from the generator still connected in the same manner, adjust the Signal Generator to 1720 KC. The OSC. trimmer is located on the front of the chassis. Adjust this trimmer until the 1720 KC signal is tuned in.

THIRD STEP: Remove the hot lead of the generator from the ANT section of the gang condenser. Connect this lead to the primary of the loop antenna through a 200 MMFD condenser. Adjust the Signal Generator to 1400 KC. Rotate the tuning control until this signal is tuned in. The ANT trimmer is located on the top of the ANT. section of the gang condenser. Adjust this trimmer until a maximum reading is noted on the output meter. No further adjustment should be necessary, unless the set has been damaged, as the coils and condenser in this receiver have been specially handled at the factory to insure proper alignment at the lower frequencies.

©John F. Rider

Compliments of www.nucow.com

Compliments of www.nucow.com

MODEL 6D-620, Tuner

GENERAL:

Signal Seeking Tuners are used on the following radios:

		Bulletin No.
Buick		
Model	980899 1950	6D- 929
Cadillac		
Model	7258865 1950	6D-1060
Oldsmobile		
Model	982482 1950	6D- 987
Model	982483 1950	6D- 987

The service bulletin for any radio using this tuner will refer to this bulletin for tuner servicing.

This bulletin covers the theory of operation, adjustments, replacements and trouble-shooting procedure.

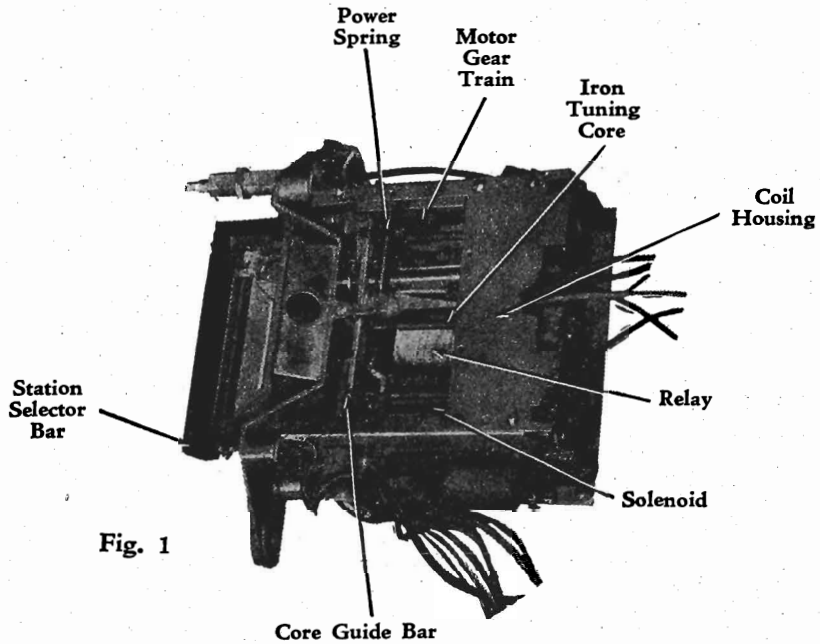

Fig. 1

THE SIGNAL SEEKING TUNER

The Signal Seeking Tuner is an electronically controlled automatic tuner by which the operator can change stations by merely depressing a single station selector bar on the radio or an auxiliary foot switch. The seeking operation is a uni-directional sweep of the broadcast band from low to high frequency with a nearly instantaneous return. The tuning mechanism is driven by a spring loaded mechanical motor which is stopped on station by a triggering circuit actuated by voltage developed from an incoming signal.

The number of stations on which the tuner will stop can be regulated by use of the Sensitivity Control. It is a step control which in the extreme clockwise position gives maximum stopping sensitivity, while it allows the tuner to stop only on strong local stations when in the minimum sensitivity or extreme counterclockwise position. This control is in the circuit only while the tuner is seeking and does not affect the "on station" sensitivity of the receiver.

THEORY OF OPERATION

This discussion of the operation of the Signal Seeking Tuner does not refer to any particular model radio. It covers the overall operation and the bulletin for the particular radio involved will give the details of the circuit used in the actual receiver.

Sweep and Return Cycle (See Fig. 2)

One Power Spring, which is fastened to the lower plate of the Planetary Arm, pulls this arm around its pivot. The Planetary Arm is linked to the Core Bar. Thus, as the spring contracts and moves the Planetary Arm it also pulls the core bar and its iron cores from the tuning coils thereby changing the tuned frequency of the radio towards the high end of the broadcast band. After the tuner has swept beyond the top broadcast frequency, the High Frequency Switch Operating Cam on the lower Planetary Arm trips the Tuner Return Switch which in turn energizes the Solenoid and this quickly returns the Planetary Arm to its original position with the cores inserted fully into the coils (low frequency) and the power spring is now under maximum tension. As the Planetary Arm returns, the Low Frequency Switch Operating Cam trips the Tuner Return Switch to its original position thus de-energizing the Solenoid and completing the cycle.

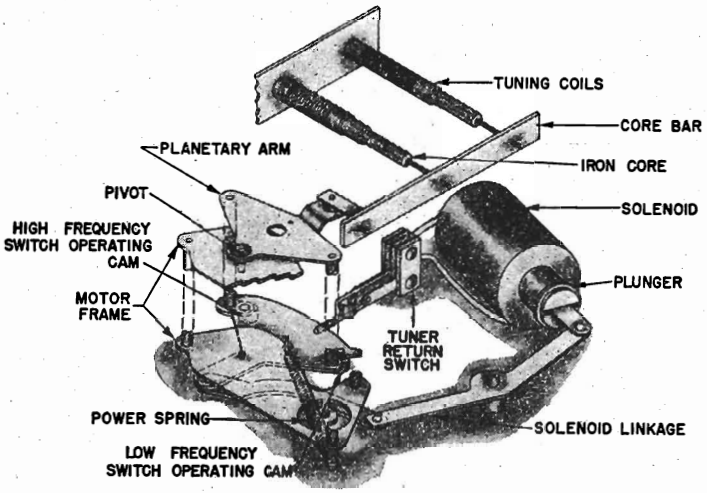

Fig. 2

©John F. Rider

Compliments of www.nucow.com

MODEL 6D-620,
Tuner

Motor and Control (See Fig. 3)

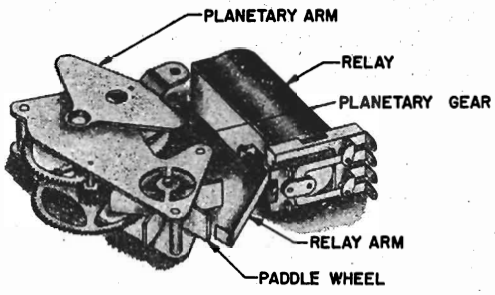

Fig. 3

The Power Spring tends to move the Planetary Arm about its pivot point thereby starting the Planetary Gear and its meshed train in motion. This motion is transferred through the gear train to the Paddle Wheel which acts as an air vane governor keeping the motion at a constant speed. This movement of the Planetary Arm is then controlled by merely freeing or blocking the Paddle Wheel with the Relay Arm. Thus, the movement of the Planetary Arm which moves the tuning cores is started or stopped by the action of the Relay Arm.

Manual Tuning Gear Operation (See Fig. 4)

Manual tuning is accomplished by turning the Manual Control Shaft which turns the Worm Gear in its bracket. The Worm Gear is meshed with the Manual Drive Gear which in turn is meshed with the Planetary Pinion Gear. During manual tuning the Paddle Wheel is held in place by the Relay Arm and this Pinion Gear is not free to rotate, thus effectively locking the Planetary Arm to the outer edge of the Manual Drive Gear. Therefore as the Manual Drive Gear turns, the Planetary Arm moves in unison with it and varies the frequency of the tuner by varying the position of the iron cores in the tuning coils. (Notice that when the set is being tuned automatically and the Paddle Wheel is rotating, the Manual Drive Gear is held securely in place by the Worm Gear while the Planetary Pinion Gear "walks around" the periphery of the Manual Drive Gear thereby causing the Planetary Arm to move and change the position of the tuning cores.)

On sets which have no manual drive, the Manual Drive Gear is secured to the Motor Frame and the Control Shaft and Worm Gear are eliminated.

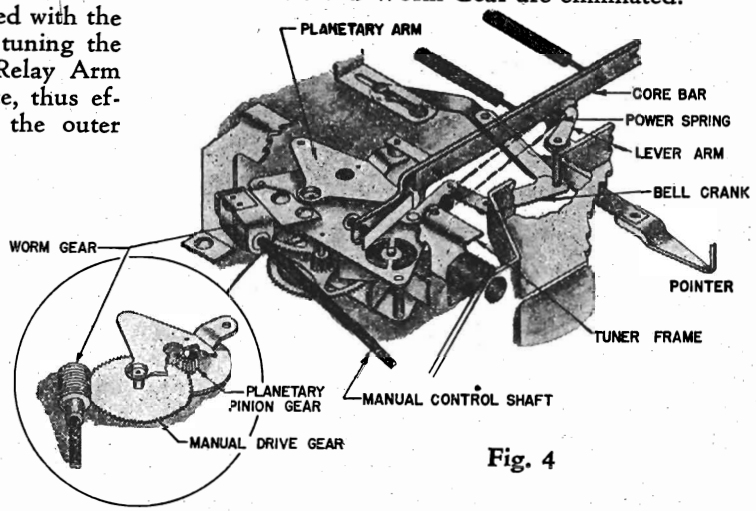

Fig. 4

Pointer and Core Bar Linkage (See Fig. 4)

The second power spring is shown in this view. It has a dual purpose, serving both as a power spring and an antibacklash spring. The primary linkage is from the tuner frame to the Lever Arm which is securely staked to the Bell Crank. At the Bell Crank the linkage splits, with one arm linked to the core bar at the extreme left end, and the other arm linked to the pointer. Thus, this spring helps pull the core bar in the high frequency direction when it is free to move and provides a spring loaded linkage between the core bar and the pointer preventing any tendency for backlash.

Clutching Operations (See Fig. 5)

The Ratchet Pawl and Wheel are used so that the Solenoid can cock the power springs without running the entire gear train in the reverse direction during the return sweep. Notice that the Ratchet also is used when the dial pointer has reached the high end of the band while tuning manually. Then the Planetary Arm has reached the end of its tuning arc and so the planetary pinion tends to be rotated by the Manual Drive Gear (see Fig. 3). This turns the Ratchet Wheel out of the Pawl and allows the pinion gear to turn freely without exerting further force on the Planetary Arm and thereby eliminates any possible damage to the mechanism.

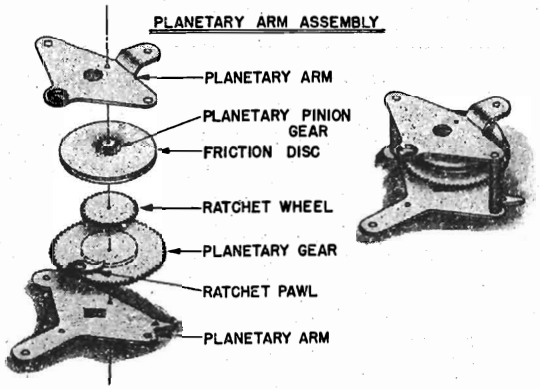

Fig. 5

The purpose of the Friction Disc is to prevent damage to the mechanism when manually tuned past the low frequency stop. This is accomplished because the disc slips before excessive pressure is exerted when the Pinion Gear tends to rotate the Planetary Gear. The Friction Disc is not found on radios without a manual drive.

©John F. Rider

Compliments of www.nucow.com

MODEL 6D-620,
Tuner

Tuner Sweep Cycle Outline (Fig. 6)

I. Tuner is started by removing Relay Arm from Paddle Wheel

A. Spring driven gear train begins to sweep. (Fig. 3)

B. Planetary Arm moves. (Fig. 2)

C. Tuning cores are moved toward higher frequency by core bar linkage to Planetary Arm.

D. Spring loaded dial pointer scans dial. (Fig. 4)

II. Signal actuates relay causing arm to stop paddle wheel

A. Gear train stops. (Fig. 3)

B. Planetary Arm is stopped.

C. Core bar movement is stopped.

D. Dial pointer sweep is stopped.

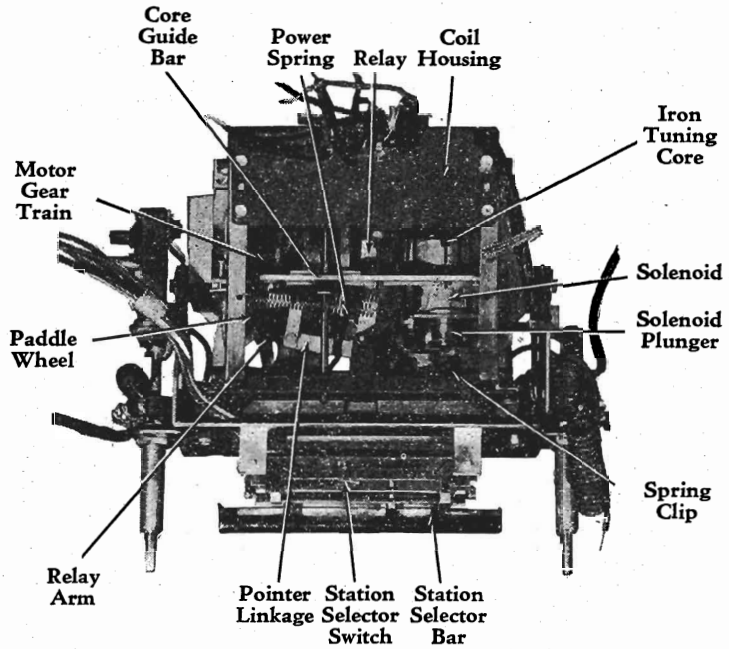

Fig. 6

III. When tuner reaches high end of dial after last stop.

A. The High Frequency Switch Operating Cam trips Tuner Return Switch. (Fig. 2)

B. Solenoid is energized.

C. Plunger is pulled into the Solenoid.

D. Planetary Arm and pointer are returned to low end of dial.

E. The Low Frequency Switch Operating Cam trips the Tuner Return Switch in the opposite direction. (Fig. 2)

F. The Solenoid is de-energized and the sweep starts from the low frequency stop.

ELECTRICAL OPERATION

The purpose of the electrical components associated with the tuner is to control the relay so the operator may start the tuner sweeping cycle by merely depressing the station selector bar and so that the sweeping operation will continue until a signal is received. At that time it is the function of this circuit to accurately tune to the frequency of the selected station. It also provides the necessary conditions to keep the tuner on the station until a change is desired. The operational cycle of the electronic control system of the signal seeker tuner is outlined

The Electrical Cycle Outline (Fig. 7)

I. Starting the Tuner Seeking (Energizing the Relay)—The Station Selector Bar (27) is momentarily depressed.

A. Contact #2 of the Station Selector Switch opens first, ungrounding secondary of the output transformer therefore muting the set as contact #1 closes.

B. Contact #1 closes and provides a circuit from B+ through the relay winding, the 15,000 ohm resistor (30), the Selector Switch contacts, and the delay circuit resistor network to ground.

C. The current through this circuit energizes the Relay and removes the Relay Arm from the Paddle Wheel—thus starting the tuner, opening contacts #2 and #4, and grounding relay contacts #1 and #3.

II. Keeping the Tuner Seeking after the Selector Bar is released (Keeping the Relay Energized)

A. Relay contact #3 is closed providing a path to ground for the cathodes of the R.F. and I.F. amplifier tubes. This path is through the Sensitivity Control so the sensitivity of the set can be controlled during the sweeping operation.

B. Relay contact #1 is grounded thus lowering the cathode to ground resistance of the Relay Section of the Trigger Tube by putting the 6,800 ohm resistor (24) in parallel with the 47,000 ohm cathode resistor (26).

©John F. Rider

Compliments of www.nucow.com

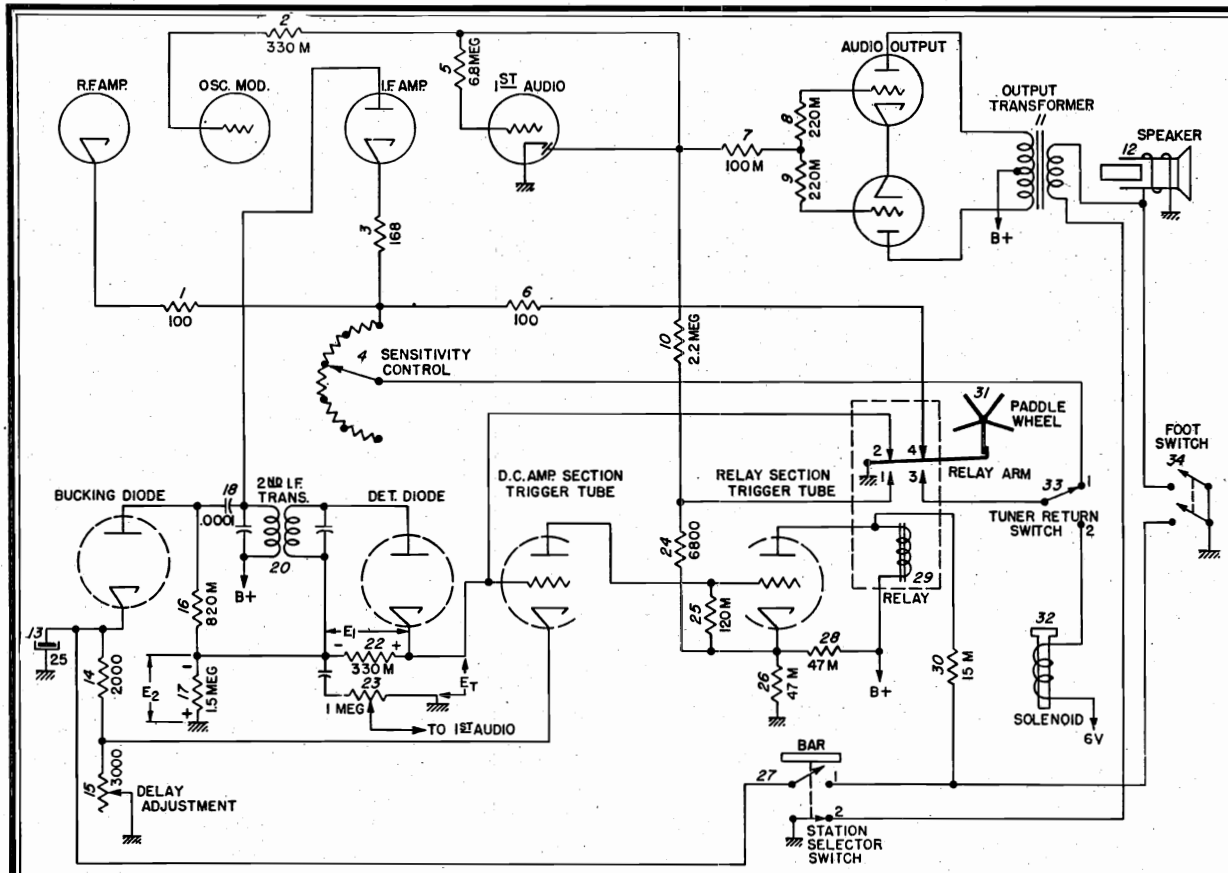

Fig. 7

This Diagram Does Not Refer to Any Particular Radio Model

The Electrical Cycle Outline (Continued)

This causes a lowering of the cathode voltage thereby causing an increased plate current flow which is sufficient to keep the relay energized and the tuner seeking.

III. Stopping the Tuner on Station with an Incoming Signal (De-energizing the Relay)

A. A voltage from the incoming signal is developed in the primary and secondary of the 2nd I.F. transformer (20).

B. The voltage in the secondary of the I.F. coil is rectified by the Detector Diode developing a D.C. voltage across the 330,000 ohm resistor (22).

C. The voltage in the primary of the I.F. coil is rectified by the Bucking Diode developing a D.C. voltage across the 1.5 megohm resistor (17).

D. The voltage developed by the Bucking Diode across the 1.5 megohm resistor (17) opposes the voltage developed by the Detector Diode across the 330,000 ohm resistor (22). The resultant voltage is applied to the grid of the D.C. Amplifier Section of the Trigger Tube. This triggering voltage gives a substantially constant tuning accuracy for all signals.

E. When the resultant triggering voltage on the grid of the D.C. Amplifier becomes positive it causes the tube to conduct.

F. The plate current flow in the D.C. amplifier section develops a biasing voltage across the 120,000 ohm resistor (25) which is between grid and cathode of the Relay Section of the Trigger Tube, making the grid more negative than the cathode thus reducing the plate current.

G. The decrease in plate current flow causes the relay to be de-energized and the Relay Arm again engages the Paddle Wheel thereby stopping the tuner sweep on a station, opening contacts #1 and #3 and grounding relay contacts #2 and #4.

IV. Holding the Tuner on Station until a new Station is Desired (Holding the Relay De-energized):

A. Relay contact #1 is opened, ungrounding the 6800 Ohm Resistor (24), thus preventing any appreciable current flow in the relay.

B. Relay contact #4 is grounded and this grounds the cathode circuits of the R.F. and I.F. amplifiers effectively by-passing the sensitivity control (4), which is now ungrounded, and leaving the set at normal sensitivity.

C. Relay contact #2 is grounded thereby grounding out the grid of the D.C. Amplifier. Any voltage now developed across the 330,000 ohm resistor (22) keeps the Bucking Diode from conducting by applying a negative voltage to its plate and the Detector Diode now functions as a conventional detector.

©John F. Rider

Compliments of www.nucow.com

MODEL 6D-620,
Tuner

The Tuner Detection Circuit (See Figs. 7 and 8)

The purpose of the tuner detection circuit is to take input signal voltages of varying strength and trigger the relay tube so that the tuner will stop accurately on the station frequency. A positive voltage developed by the signal on the grid of the D.C. Amplifier Section causes the tuner to trigger and stop. This is accomplished by using the Detector Diode and Bucking Diode to develop voltages of opposite polarity (E_1 and E_2) between grid and ground of the D.C. Amplifier Section of the Trigger Tube, thus effectively applying the algebraic sum of these voltages (E_t) to this signal grid. (Note that contacts #2 and #4 of the relay are open.) These relative voltages plotted against frequency are shown in Fig. 8 using a station frequency of 1200 KC. Notice that the response curve of the voltage (E_2) across the 1.5 megohm resistor (17) is broader and not as large as the voltage (E_1) developed across the 330,000 ohm (22) detector load. This is because the detector voltage has benefit of one more tuned circuit which gives the narrower curve. Also there is a positive voltage appearing at the cathode of the Bucking Diode which will have the effect of lowering the voltage (E_2) across the 1.5 megohm resistor (17) because it will introduce a delay before the Bucking Diode will begin to conduct. This delay can be controlled by the Delay Adjustment in the cathode of the Bucking Diode. This Delay Adjustment also controls the trigger level so that the mechanical delay is compensated for and the tuner stops exactly on station. It is a factory adjustment and SHOULD not be adjusted unless it is proven faulty.

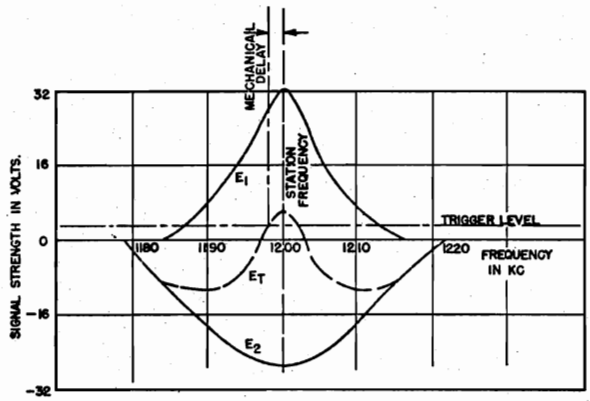

Fig. 8

Since the two diodes obtain their voltages from the same incoming signal, the strength of both voltages will vary directly with the strength of the incoming signal. Therefore, while they both rise and fall with variation in signal strength, their difference (E_t), which is effectively the trigger pulse, will tend to remain constant. Thus, a station will be tuned in with the same degree of accuracy whether it is a strong or weak signal.

Tuner Muting (See Fig. 7)

Various methods of muting are employed in the signal seeker tuner operated radios. To prevent a click in the speaker as the station selector bar energizes the relay, the output transformer circuit is opened (contact #2 of Station Selector Switch (27), before contact #1 is made. Or, in the case of the foot switch, the speaker voice coil is grounded and the set muted before the relay energizing contact is made.

The receiver is also muted when the solenoid is energized during the return cycle of the tuner. This is accomplishd because when the tuner return switch (33) is mechanically tripped to position #2 it ungrounds the Sensitivity Control which is the cathode return for the R.F. and I.F. amplifier tubes thus momentarily disabling the set.

The receiver also may be muted during the sweep cycle of the tuner by applying the negative oscillator voltage to the grids of the audio tubes to cut them off during the sweep time. Then, when the relay stops the paddle wheel on station and contact #1 is ungrounded enough positive voltage is applied through the 2.2 megohm resistor (10) to counteract the negative voltage from the oscillator and return the output tubes to normal operation. Any excess positive voltage will leak off through the diode to ground in the 1st audio tube.

Sensititivity Control

The sensitivity control is a step resistor which is inserted into the cathodes during the tuning sweep when relay contact #3 is grounded and is the means by which the operator controls the number of stations on which the tuner will stop.

©John F. Rider

Compliments of www.nucow.com

MODEL 6D-620,
Tuner

ADJUSTMENTS

All illustration numbers in this section can be used in conjunction with the bulletin for the radio involved and do not refer to the Theory of Operation portion of this bulletin.

All adjustments on Signal Seeking Tuners are made accurately at the factory and do not require further adjustment unless it is definitely proven they are wrong or tuner parts are replaced. These adjustments are readily accessible and can be made without removing the tuner from the radio. All adjustments are made with the antenna disconnected from the radio. All adjustments can be reached by removing the front and rear covers of the radio and the adjustment cover on the top of the radio. The correct procedures for making these adjustments are as follows:

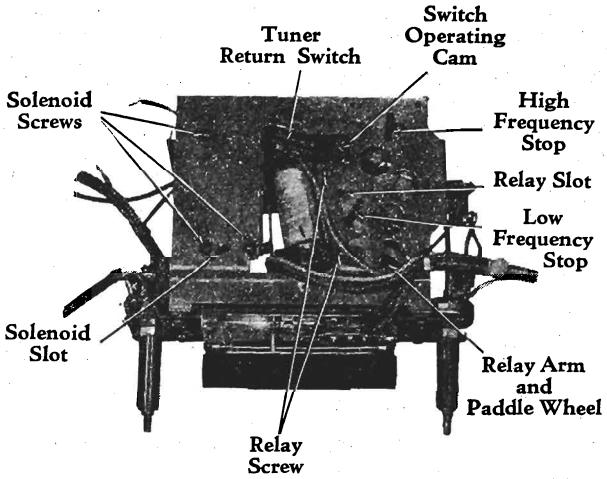

Fig. 9

Solenoid Pole Piece Adjustment (Fig. 10)

This adjustment should be made whenever the Solenoid or Solenoid Plunger is replaced. Its purpose is to obtain the correct amount of force from the Solenoid and to prevent the Solenoid Plunger from sticking.

1. With a screwdriver back the Solenoid Pole Piece out of the Solenoid.
2. Bottom the Solenoid Plunger in the Solenoid. The plunger is bottomed when the "C" washer collar on the plunger hits the frame of the Solenoid.
3. Screw the Solenoid Pole Piece into the Solenoid until it just touches the plunger.
4. Back the pole piece off exactly 1½ turns.
5. Tighten the hex locking nut and seal with glyptal or shellac.

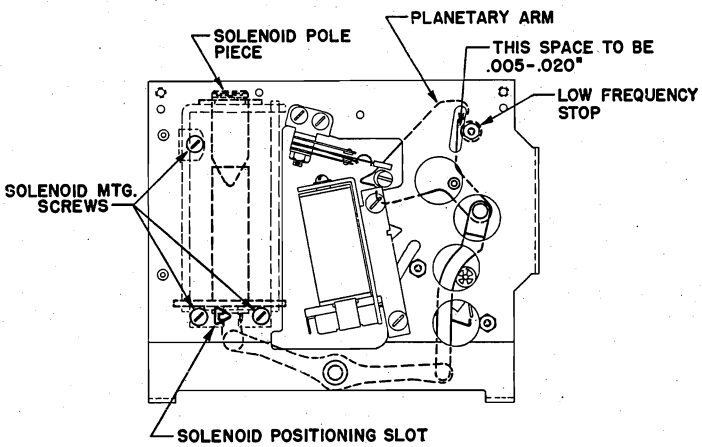

SOLENOID POSITIONING ADJUSTMENT

Fig. 10

Solenoid Adjustment (Fig. 10)

The Solenoid adjustment should be made whenever solenoid or Solenoid plunger is replaced. Its purpose is to provide the correct amount of solenoid plunger movement to move the tuner to the low frequency end of the broadcast band.

1. With the radio turned off, connect a jumper wire across the 0.5 mfd condenser, Illustration #43, on the cold side of the Solenoid. This is the only paper condenser found on the tuner.
2. Turn the radio on. (This energizes the Solenoid.)
3. Energize the Relay by momentarily depressing the Station Selector Bar.
4. Loosen but do not remove the three solenoid mounting screws.
5. Using a screwdriver in the Solenoid Positioning Slot, turn the screwdriver and move the Solenoid until there is a 0.005 to 0.020 inch gap between the Planetary Arm and its Low Frequency Stop.
6. Tighten the three Solenoid Mounting Screws.
7. Turn the radio off and remove the jumper wire from the condenser.

©John F. Rider

Compliments of www.nucow.com

MODEL 6D-620, Tuner

Relay Adjustment (Fig 11)

This adjustment should be made whenever the relay is replaced. This is the only adjustment of the relay that should be attempted in the field. The adjustment of the relay is to position the relay arm to have the correct engagement and clearance with the gear train paddle wheel.

1. With the radio turned off, connect a jumper wire across the 0.5 mfd condenser, Illustration #43, on the cold side of the Solenoid. This condenser is found on the tuner.
2. Turn the radio on. (This energizes the Solenoid.)
3. Energize the Relay by momentarily depressing the Station Selector Bar.
4. Loosen but do not remove the two Relay Mounting Screws.
5. Using a screwdriver in the Relay Positioning Slot, turn the screwdriver and move the relay until there is a gap of approximately 0.030 or 1/32 inch between the top of the Relay Arm and the tip of the blades on the Paddle Wheel.
6. Tighten the two Relay Mounting Screws.
7. Turn the radio off and remove the jumper wire from the condenser.

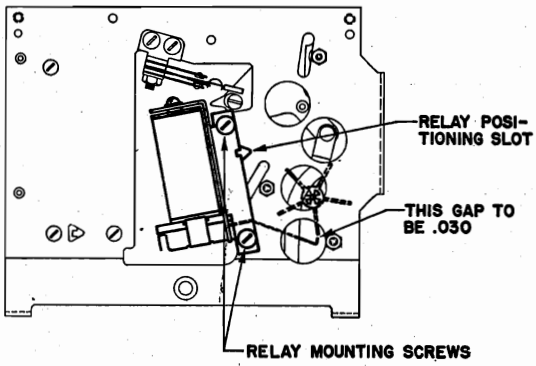

RELAY POSITIONING ADJUSTMENT

Fig. 11

Switch Operating Cam Adjustment (Fig. 12)

This adjustment should be made whenever the Motor Gear Train or the Tuner Return Switch is replaced. Its purpose is to set the timing of the Tuner Return Switch.

1. With the radio turned off, insert a 0.060 inch feeler gauge through the slot against the Low Frequency Stop. Number 14 bare wire is a satisfactory gauge.
2. Position the Planetary Arm against the feeler gauge. This can be done with the manual tuning control or on radios without this control the Planetary Arm can be moved directly or by moving the core guide bar to the low frequency end of the broadcast band (tuning cores all the way in the coils).

   CAUTION: ON RADIOS HAVING NO MANUAL TUNING CONTROL, THE PLANETARY ARM CAN BE MOVED ONLY TOWARD THE LOW FREQUENCY STOP WITHOUT DAMAGING THE MOTOR GEAR TRAIN.
3. With a small screwdriver, move the Low Frequency Switch Operating Cam to a position furthest from the Tuner Return Switch.
4. Trip the Tuner Return Switch so that its operating arm is toward the cam.
5. Turn the Low Frequency Switch Operating Cam in a counter clockwise direction until it trips the switch.
6. Insert a 0.060 inch feeler gauge through the slot against the High Frequency Stop.
7. Position the planetary arm against the feeler gauge. CAUTION: DO NOT USE DIRECT FORCE TO MOVE THE PLANETARY ARM. The Planetary Arm can be positioned either by using the manual tuning control or on radios without a manual control as follows:
   (a) Turn the radio on and depress the Station Selector Bar.
   (b) Turn the radio off very close to the high frequency end of the broadcast band.
   (c) With a screwdriver turn the Switch Operating Cam to the position furthest from the Tuner Return Switch.
   (d) Turn the radio on and depress the Station Selector Bar.
   (e) Allow the Planetary Arm to run against the feeler gauge.
   (f) Turn the radio off.
8. Turn the Switch Operating Cam to the position furthest from the Tuner Return Switch if this has not already been done.
9. Trip the Tuner Return Switch so that its operating arm is towards the cam.
10. Turn the High Frequency Switch Operating Cam in a clockwise direction until it trips the Tuner Return Switch.

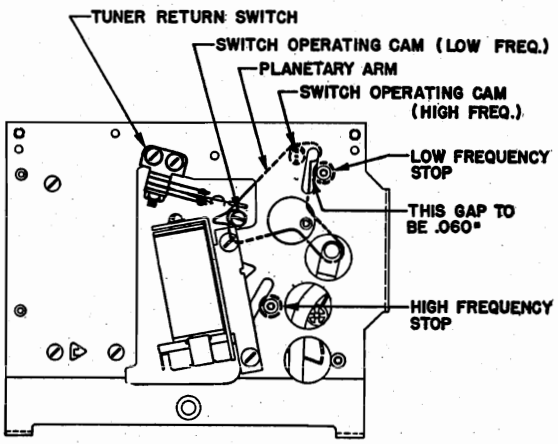

SWITCH OPERATING CAM ADJUSTMENTS

Fig. 12

©John F. Rider

Compliments of www.nucow.com

MODEL 6D-620,
Tuner

Cathode Delay Adjustment

This adjustment controls the tuning accuracy of the radio and is carefully adjusted at the factory. It should not be made unless the part is replaced. It is adjusted as follows:

1. With the antenna disconnected turn the radio on. If the bulletin for the radio involved specifies the adjustment to be made with the radio "seeking" depress the station selector bar.
2. Adjust the input voltage to the radio to exactly 6 volts at the "A" connector or the spark plate.
3. Connect a meter from the cathode of the D.C. amplifier section of the trigger tube (pin 8 of the 12AU7 tube) to chassis and adjust the cathode delay rheostat, illustration 110, so the meter reads the voltage specified under "Adjustment Procedure" in the service bulletin for the model radio involved.

REPLACEMENTS

All illustration numbers in this section can be used in conjunction with the bulletin for the radio involved and do not refer to the Theory of Operation portion of this bulletin.

This tuner has been designed to provide a maximum of servicing efficiency. All service parts have been made very accessible and easy to replace. The wiring to the tuner has been made long enough so that the tuner can be dismounted from the radio case and worked on without disconnecting any leads. (NOTE: It may be necessary to remove some connections of bond straps.) For most replacements such as the relay, the tuner return switch, etc., no special instructions other than being sure the proper adjustments are made are necessary. However, to facilitate fast replacement of some parts, the following instructions are included:

Solenoid or Solenoid Plunger Replacement (Fig. 10)

1. Remove the radio rear cover and adjustment cover. (Note: It will be necessary to remove the front cover on some radios.)
2. Remove the three solenoid mounting screws found on the top of the tuner.
3. Disconnect the two leads to the solenoid.
4. Remove the solenoid and bracket from the rear of the tuner. (It will be necessary to disconnect one lead of a 0.5 mfd condenser on some radios to give sufficient clearance.)
5. Remove the solenoid plunger from its linkage by removing the spring clip holding this linkage to it.
6. Place the plunger in the solenoid and make the **Solenoid Pole Piece Adjustment.**
7. Install the solenoid plunger and solenoid in the tuner.
8. Fasten the solenoid plunger to its linkage with the spring clip.
9. Solder the leads to the terminals from which they were removed. (If the 0.5 mfd condenser lead was removed, solder it in place).
10. Mount the solenoid to the tuner with the three screws and make the **solenoid adjustment.**

Station Selector Switch Replacement (Fig. 13)

1. Remove the escutcheon from the front of the radio.
2. Remove the Station Selector Bar and switch assembly which is held in place with two screws through the mounting plate.
3. Remove the switch and disconnect the leads.
4. Connect the leads to the new switch and assemble to mounting plate.
5. Adjust the position of the Switch Operating Ring so that it overtravels the opening and closing of the switch contacts in both directions about .030 or 1/32 inch. This adjustment is made by inserting a screwdriver in the slot on the ring and sliding on the selector bar shaft.
6. Return the selector bar and switch assembly to the radio and fasten with the two screws.

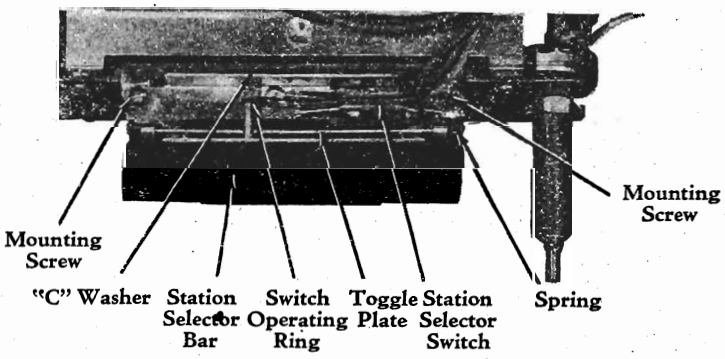

Fig. 13

©John F. Rider

Compliments of www.nucow.com

Station Selector Bar Replacement (Fig. 13)

1. Remove the station selector bar and switch assembly from the radio as described in steps 1 and 2 of **Station Selector Switch Replacement.**
2. Remove the small "C" washer from the end of the station selector bar shaft.
3. Remove the two springs that hold the station selector bar and toggle plate to the mounting plate.
4. Assemble the new station selector bar and toggle plate with the two springs to the mounting plate as shown.
5. Place the "C" washer on the shaft and secure.
6. Adjust the position of the switch operating ring as described in step 5 of **Station Selector Switch Replacement.**
7. Return assembly to the radio and mount with the two screws.

Motor Gear Train Replacement (Fig. 14)

1. Remove the front and rear cover of the radio.
2. Dismount the tuner from the case and move it out of case far enough so that it can be worked on.
3. Divide the tuner into two parts by:
   (a) Removing the spring clip holding the gear train planetary arm to the core guide bar linkage.
   (b) Removing the four tuner assembly screws. (Some tuners have two additional screws.)
   (c) Separating the two halves of the tuner.

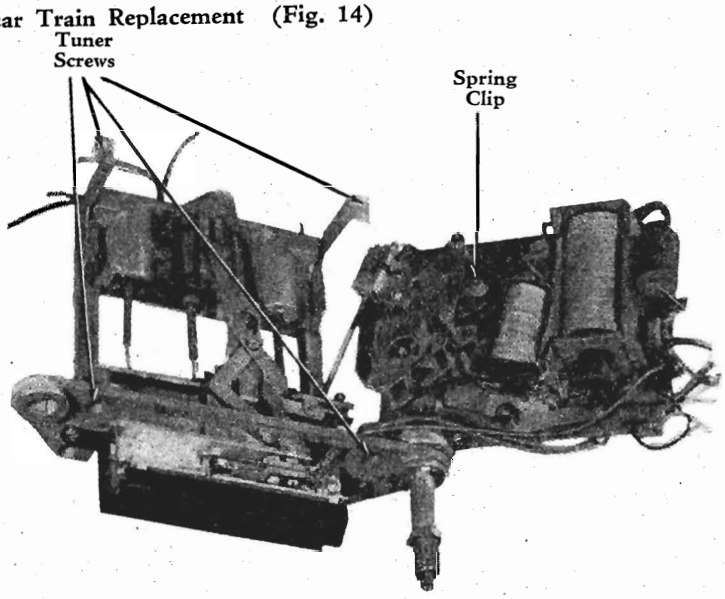

Fig. 14

4. On radios having a manual tuning control, remove the worm gear and bracket from the gear train.
5. Disconnect the motor gear train from the solenoid plunger linkage by removing the spring clip holding them together.
6. Remove the three nuts mounting the motor gear train.
7. Mount the new motor gear train to the tuner with the three nuts.
8. Connect the gear train to the solenoid linkage with the spring clip.
9. On radios having a manual tuning control, remove the screw holding the manual gear of the gear train in position and mount the worm gear and bracket to the gear train. Be careful to get good gear mesh and do not lose the anti-squeak spring on the worm gear bracket.
10. Reassemble the tuner and make the **Switch Operating Cam Adjustment.**

THE TROUBLE SHOOTER'S GUIDE

All illustration numbers in this section can be used in conjunction with the bulletin for the radio involved and do not refer to the Theory of Operation portion of this bulletin.

To facilitate rapid diagnosis of troubles which may develop in the Signal Seeking Tuner, those most likely to occur have been classified and listed in a trouble shooting chart. Three fundamental tests which are easily made on the radio are the basis for this chart. The normal indication for each test is shown just to the right of the test block in solid lines and if the indication is normal the next basic test should be made. However, if the normal indication does not apply to the radio under test, the various abnormal indications that could result from the check are shown in irregular line blocks below the normal condition. When the block which applies to the radio being checked is reached, a chart which will contain a simplified partial schematic will be referred to. The checks necessary to isolate the defective components will also be included in this chart and components common to all sets are assigned illustration numbers which are the same as those in the individual bulletins for each specific set. Thus, through the use of these charts, the vast majority of the troubles can be isolated in a very short period of time.

©John F. Rider

Compliments of www.nucow.com

Initial Trouble-Shooting Tests

NOTE: Read the chart from LEFT to RIGHT until the specified condition does not apply to the radio being tested, then read down until the condition listed is identical to that of the radio under test. See the chart indicated for further analysis.

TEST I

TURN ON RADIO AND ALLOW RADIO TO WARM UP — Dial pointer remains stationary

Dial pointer begins sweeping —See Chart 3, Conditions 2 & 3

TEST II

DEPRESS STATION SELECTOR BAR — Dial pointer sweeps range from below 550 KC to above 1600 KC in satisfactory manner.

Pointer starts but stops when selector bar is released — See Chart 4

Pointer does not sweep smoothly thru its complete range. See Chart 5

Pointer is stuck at end of dial. See Chart 1

Pointer stuck at a midway point, remove adjustment plate - Observe Relay as bar is depressed

Relay energizes See Chart 2

Relay does not energize See Chart 3, Condition 1

TEST III

WITH ANTENNA CONNECTED, DEPRESS SELECTOR BAR — Radio stops on stations normally received — CHECK RADIO INSTALLATION IN AUTOMOBILE

Tuner doesn't stop on stations normally received - Check radio operation independent of tuner. Chart 6

Tuner stops at various points on dial, but no sound from the speaker.
Buick - See Chart 8
Oldsmobile - See Chart 8
Cadillac - See Chart 7

Stopping action of tuner is unsatisfactory for other reasons See Chart 10

INITIAL PREPARATIONS FOR TEST:

1. Check tubes and vibrator.
2. Adjust input to 6 volts at receiver spark plate.
3. Adjust sensitivity control and volume control to maximum positions—all tests.
4. Leave antenna disconnected until the chart indicates connection to be made; when it is connected, antenna trimmer MUST be peaked.

©John F. Rider

Compliments of www.nucow.com

CHART 1

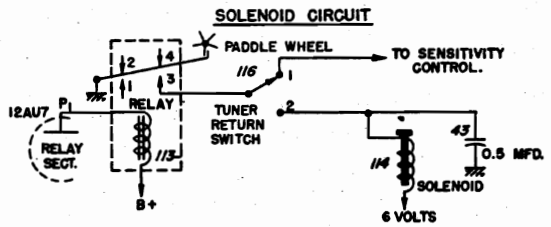

Solenoid Circuit

CONDITION 1: TUNER WILL NOT START. POINTER STATIONARY AT END OF DIAL

IF

STUCK AT HIGH END OF DIAL, momentarily short out the solenoid condenser, Illus. 43

IF

THE TUNER RETRACES

Check

1. Adjustment of high frequency cam which closes tuner return switch at high end of the band. Illus. 116
2. Tuner return switch, Illus. 116, for sticking open.
3. Ground connection of relay armature.
4. Relay Contact #3 for open.

IF

THE TUNER WON'T RETRACE

Check

1. Solenoid, Illus. 114, for open.
2. Solenoid for short. (Fuse blows when bar is depressed)
3. Voltage across solenoid with solenoid condenser, Illus. 43, shorted out. Solenoid voltage should be at least 5.5 volts.
4. Solenoid positioning adjustment.
5. For mechanical bind by grasping planetary arm and cocking motor gear train by hand.

IF

STUCK AT LOW END OF THE DIAL, make a visual inspection of the position of the tuner return switch, Illus. 116.

IF

TUNER RETURN SWITCH IS CLOSED

(Position 2)

Check

1. Adjustment of cam which opens tuner return switch at low end of the band. (See Adjustment)
2. Tuner return switch for sticking closed.

IF

TUNER RETURN SWITCH IS OPEN

(Position 1)

Check

1. Switch for possible shorted terminals.
2. Mechanical portion of tuner for a bind or a defective motor.
3. 0.5 mfd solenoid condenser, Illus. 43, for short.
4. Cold side of solenoid for short to chassis.

IMPORTANT: IF ABOVE CHECKS PROVE THE SOLENOID CIRCUIT TO BE SATISFACTORY GO TO CHART 2 AND CHECK FOR A MECHANICAL DEFECT.

©John F. Rider

Compliments of www.nucow.com

MODEL 6D-620,
Tuner

CHART 2

Relay Energizes But Tuner Will Not Start

I. DEPRESS STATION SELECTOR BAR AND NOTICE WHETHER RELAY ARM DISENGAGES PADDLE WHEEL. IF IT DOESN'T—SEE RELAY POSITIONING ADJUSTMENT.

II. VISUALLY CHECK FOR CAUSE OF BIND. INSPECT TUNER FOR IMPROPERLY ROUTED WIRES FOULING MECHANISM.

III. REMOVE TUNER FROM THE RADIO. SEPARATE THE TWO HALVES OF THE TUNER.

A. CHECK THE TOP HALF OF TUNER FOR BIND BY MOVING THE CORE BAR WITH YOUR FINGER.

IF

Top half doesn't bind, check bottom half.

IF

Top half binds, remove clip from connecting link between core bar and pointer, and check each separately for bind.

B. CHECK BOTTOM HALF OF TUNER FOR BIND BY REMOVING CLIP FROM MOTOR SIDE OF SOLENOID LINKAGE.

CHECK

For bind in solenoid by moving solenoid linkage by hand.

IF

Bind occurs in solenoid linkage, remove clip from solenoid end of solenoid linkage to determine if bind is in solenoid plunger or linkage. If the solenoid linkage and solenoid are O. K., connect the gear train and soleniod together again.

CHECK

Gear train for bind by pressing the plunger into the solenoid then carefully moving the relay arm out of the paddle wheel. The paddle wheel should start running.

IF

The paddle wheel doesn't begin running, the gear train is defective and should be replaced.

©John F. Rider

Compliments of www.nucow.com

MODEL 6D-620,
Tuner

CHART 3

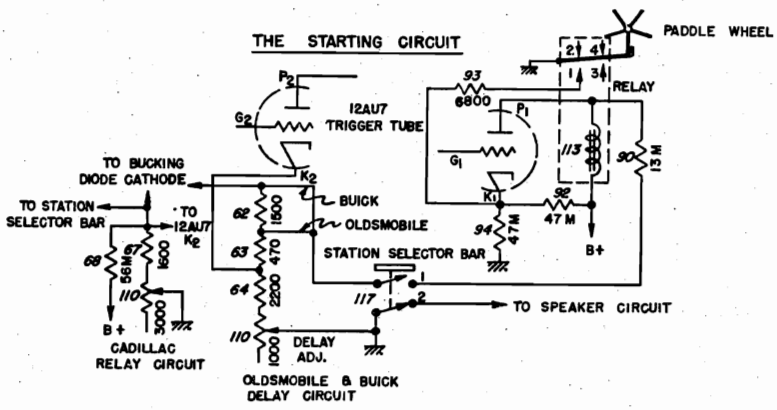

The Starting Circuit

CONDITION 1: THE TUNER WILL NOT START. RELAY DOES NOT ENERGIZE WHEN THE STATION SELECTOR BAR IS DEPRESSED.

MEASURE THE VOLTAGE BETWEEN THE CHASSIS AND THE SWITCH SIDE OF THE 13M OHM RESISTOR (ILLUS. 90)—(WITH RADIO ON AND AN INPUT OF 6 VOLTS, THIS VOLTAGE MUST BE AT LEAST 180 VOLTS FOR PROPER OPERATION OF THE RELAY.)

IF

VOLTAGE IS ZERO, check for

1. Open relay winding.
2. Open 13M ohm resistor.
3. Inoperative power supply or short in B voltage line.

VOLTAGE IS LOW check, for

1. Defect in power supply.
2. Low input voltage.

IF

VOLTAGE APPROXIMATES THE B VOLTAGE, depress the station selector bar and again note the voltage.

IF

THE VOLTAGE DROPS, (normal drop approximately 65 volts)

Check

1. Relay winding for short or partial short.

   (Normal relay resistance from 3200 - 3600 ohms.)
2. Resistor string from station selector bar switch to ground, for possible excessive resistance.
3. Relay Current. If relay doesn't energize with 9.5MA current relay is defective.

IF

THERE IS NO CHANGE IN VOLTAGE

Check

1. Station selector switch contacts, Illus. 117, for open.
2. Resistor string from station selector bar switch to ground for possible open.

CONDITION 2: THE POINTER COMMENCES SWEEPING ACTION IMMEDIATELY WHEN THE RADIO IS TURNED ON, WITHOUT PREVIOUS DEPRESSION OF THE STATION SELECTOR BAR.

Check for

1. Defective station selector bar switch, (Sticking closed) or a short at the switch terminals.
2. Short to chassis from either end of the 13M ohm resistor (Illus. 90).
3. Short to chassis at Plate (P1) terminal of the 12AU7 tube. (Pin 1)
4. Relay armature stuck in the energized position. (Should return to de-energized position when set is turned off.)

CONDITION 3: POINTER COMMENCES SWEEPING ACTION AFTER WARM UP PERIOD, WITHOUT PREVIOUS DEPRESSION OF THE STATION SELECTOR BAR.

Check for

1. Short from cathode (K1) of 12AU7 (Pin 3) to ground.
2. Contact #1 of the relay switch shorted to ground at all times.

©John F. Rider

Compliments of www.nucow.com

MODEL 6D-620,
Tuner

CHART 4

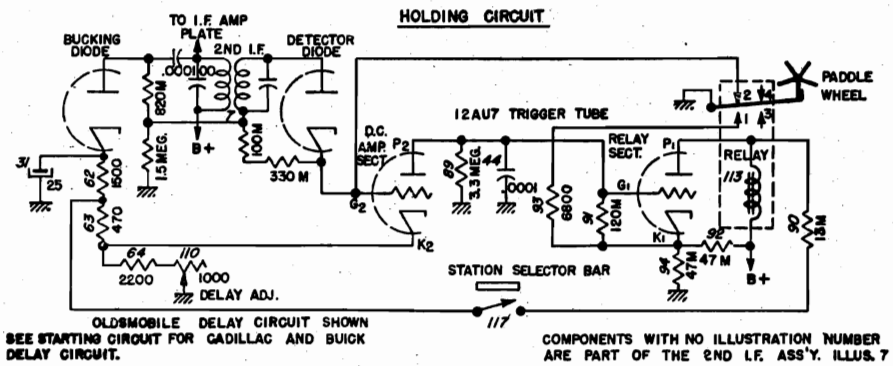

Holding Circuit

CONDITION: DIAL POINTER STOPS INSTANTLY WHEN STATION SELECTOR BAR IS RELEASED.

I. CHECK TRIGGER TUBE (12AU7). IF OK GO TO NEXT CHECK.

II. MEASURE GRID (G_1) (Pin 2) TO CATHODE (K_1) (Pin 3) VOLTAGE AT 12AU7 TUBE WITH RADIO TURNED ON. (THIS VOLTAGE MUST BE MEASURED WITH A VACUUM TUBE VOLTMETER.)

IF

VOLTAGE READING IS LESS THAN 25 VOLTS — GO TO CHECK III.

IF

VOLTAGE READING IS ABOVE 25 VOLTS check:

1. Grid (G_1) to chassis resistance. If 110,000 ohms or less, check:
   a. .000100 mfd. condenser (Illus. 44) for short or leakage.
   b. P_2 (Pin 6) and G_1 terminals of 12AU7 for possible shorts to chassis.
2. D.C. amplifier cathode, (K_2) of 12AU7 (Pin 8), to ground resistance for possible short.
   a. Check at station selector switch terminals, Illus. 117, for possible short.
   b. Check at D.C. amplifier cathode terminal (K_2) for short to chassis or grid (G_2) terminal. (Pin 7)
3. 25 mfd electrolytic, Illus. 31, for short.

III REPEAT MEASUREMENT MADE IN TEST II, THIS TIME WITH STATION SELECTOR BAR DEPRESSED.

IF

VOLTAGE IS LESS THAN 8 VOLTS, check for:

1. Open between P_1 and relay.
2. Open 6800 ohm resistor. (Illus. 93)
3. Poor relay contact #1.
4. Partially shorted relay. (Resistance should be 3200 - 3600 ohms)

IF

VOLTAGE IS MORE THAN 8 VOLTS, check for:

1. Defective detector tube. (Check by substitution. 6R8 - Buick and Oldsmobile, 6AQ7 - Cadillac)
2. Leaky .000100 mfd. coupling condenser from I.F. amplifier plate to bucking diode plate. (This part in 2nd I.F. assembly. Check by measuring voltage at orange lead of 2nd I.F. with set turned on. A VTVM reading of more than 3 volts positive with respect to ground indicates a leaky condenser.) Replace 2nd I.F.
3. Oscillation in radio. (Check by grounding G_2 and depressing bar. If tuner action is now OK trouble is due to oscillation.) (For oscillation - check AVC filter and screen by-pass condensers.)

©John F. Rider

Compliments of www.nucow.com

MODEL 6D-620, Tuner

CHART 5

Miscellaneous Defects in the Sweep Action of the Tuner

CONDITION I. TUNER DOES NOT SWEEP THROUGH THE COMPLETE FREQUENCY RANGE.

- **IF** Tuner retraces before high band edge is reached, adjust high frequency eccentric cam which closes tuner return switch so that retrace occurs at approximately 1620 KC. See adjustments.
- **IF** Tuner starts sweeping before low band edge is reached, adjust low frequency eccentric cam which opens tuner return switch so that sweeping starts at a point below 550 KC. See adjustments.

CONDITION II. TUNER SWEEP ACTION IS SLOW, JERKY OR ERRATIC.

- **CHECK** For pointer drag against escutcheon backplate. If this exists, see adjustments.
- **CHECK** For broken or missing motor power spring.
- **CHECK** For light mechanical bind - See Chart 2
- **CHECK** For defective gear train. See methods for checking outlined on Chart 2

CONDITION III. TUNER SWEEPS NORMALLY UNTIL A CERTAIN POINT ON ITS DIAL IS REACHED, WHEN IT STOPS. DEPRESS STATION SELECTOR BAR.

- **IF** Tuner can be started again by depression of selector bar, tuner is stopping on an oscillation or feedback in the radio circuit which occurs only at certain points on the dial. Check radio.
- **IF** Tuner will not start when selector bar is again depressed, check for mechanical bind. See Chart 2

CONDITION IV. TUNER RETURN ACTION ABNORMAL

- **IF** Tuner returns to a midway point and sticks there - check solenoid plunger for a bind.
- **IF** Pointer rapidly goes back and forth between high end and midway point with a "Machine-gun" like effect.
  - A. Manual worm unmeshed from manual drive gear. (On sets with manual)
  - B. Screw which secures gear just below top plate of planetary arm to the planetary arm missing or loose. (On sets without manual tuning)
  - C. Defect in planetary arm assembly. Replace motor gear train.
- **IF** Tuner return action is slow — (About the same speed as sweeping speed)—the defect is in planetary arm assembly — replace gear train.

©John F. Rider

Compliments of www.nucow.com

MODEL 6D-620,
Tuner

CHART 6

Procedure for Checking Radio Operation Independent of Tuner

CONDITION I. RADIO HAS MANUAL TUNING KNOB.

Tune radio manually and note number of stations received with listenable volume. Adjust sensitivity control to maximum and note number of stations selected automatically.

IF

Normal number of stations is received manually, but these stations are not received automatically, check tuner. See Chart 9.

IF

Normal number of stations cannot be received, TROUBLE-SHOOT RADIO PROPER.

CONDITION II. RADIO DOES NOT HAVE MANUAL TUNING.

Connect signal generator to antenna connector through a series condenser of the value specified in the service bulletin. Adjust generator output to a high level and tune the generator around the frequency indicated by the radio dial pointer until the signal is tuned in.

IF

RADIO PICKS UP SIGNAL, set the sensitivity control to maximum, peak antenna trimmer and depress the station selector bar.

IF

SIGNAL IS NOT PICKED UP BY RADIO, analyze the cause of radio failure.

IF

TUNER STOPS ON THE SIGNAL,

tune generator to frequency of weak station normally heard in the locality. Depress the station selector bar. When the tuner stops on the generator signal, plug in the antenna and again peak the antenna trimmer.

IF STATION CAN BE HEARD

Check the tuner - See Chart 10.

IF STATION CANNOT BE HEARD

Check the radio for defect causing it to be weak.

IF

TUNER DOES NOT STOP ON SIGNAL, see Chart 9.

©John F. Rider

Compliments of www.nucow.com

MODEL 6D-620,
Tuner

CHART 7

CADILLAC CATHODE AND MUTING CIRCUITS

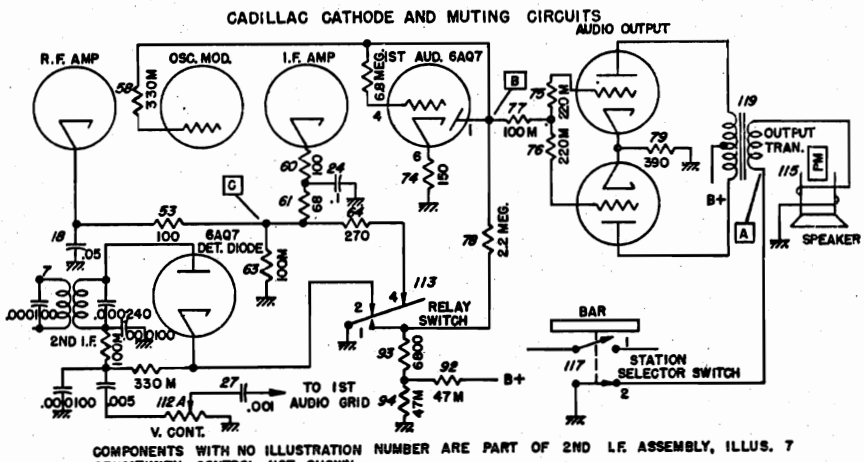

Tuner Stops on Signals But No Sound From Speaker

I. SHORT OUTPUT TRANSFORMER SECONDARY LEAD. GOING TO SELECTOR SWITCH, TO CHASSIS. (POINT A).

IF SOUND COMES FROM SPEAKER, find open between transformer secondary and ground end of muting section of station selector switch contact 2.

IF RADIO IS STILL DEAD — go to check II.

II. SHORT PIN #1 OF 6AQ7 TUBE TO CHASSIS. (POINT B)

IF SOUND COMES FROM SPEAKER, check for open between pin #1 at 6AQ7 and connect #1 of relay switch.

IF RADIO IS STILL DEAD — go to check III.

III. SHORT RF AND IF CATHODE STRING TO CHASSIS. (POINT C)

IF SOUND COMES FROM THE SPEAKER, check for open between cathode string and ground through relay contact #4.

IF RADIO IS STILL DEAD, make usual radio checks to localize defective part.

©John F. Rider

Compliments of www.nucow.com

MODEL 6D-620,
Tuner

CHART 8

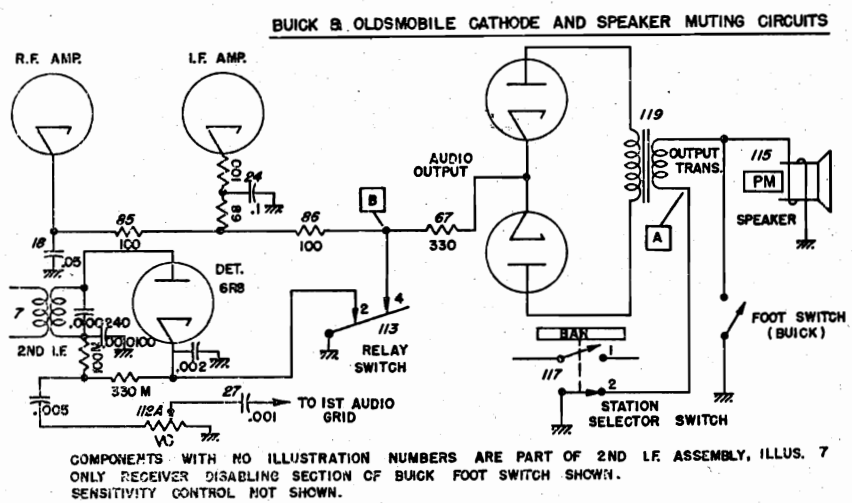

Tuner Stops on Signals But No Sound From Speaker

I. SHORT TO CHASSIS THE OUTPUT TRANSFORMER SECONDARY LEAD GOING TO SELECTOR SWITCH. (POINT A)

IF SOUND COMES FROM SPEAKER, find open between transformer secondary and ground end of muting section of station selector switch. Check for shorted foot switch - (Buick)

IF RADIO IS STILL DEAD — go to check II.

II. SHORT RF, IF, AND OUTPUT CATHODE CIRCUITS TO CHASSIS AT POINT B.

IF SOUND COMES FROM SPEAKER, check for open between cathode string and ground through relay contact #4.

IF RADIO IS STILL DEAD, make usual radio checks to find defective part.

©John F. Rider

Compliments of www.nucow.com

MODEL 6D-620,
Tuner

CHART 9

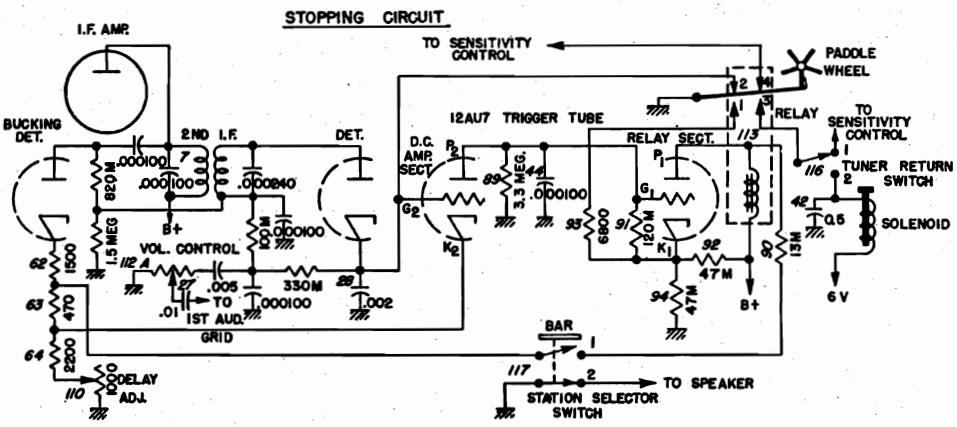

COMPONENTS WITH NO ILLUSTRATION NUMBERS ARE PART OF 2ND I.F. ASSEMBLY, ILLUS. 7.
OLDSMOBILE DELAY CIRCUIT SHOWN.

Tuner Will Not Stop on Stations, Radio Otherwise Normal

I. WITH RADIO OFF, CHECK ENGAGEMENT OF RELAY ARM TO PADDLE WHEEL

IF

Relay arm is missing — replace relay.

IF

Relay arm does not engage paddle wheel—check relay positioning adjustment. **(Do not adjust engagement by bending relay arm)**

II. WITH TUNER SWEEPING, MOMENTARILY SHORT 12AU7 CATHODE (K_2) (Pin 8) TO GROUND

IF

TUNER STOPS, check:

1. Voltage between D.C. amplifier cathode (K_2) and B—.

   NO VOLTAGE:
   Open between K_2 and ground.

   WRONG VOLTAGE: (For correct voltage see bulletin for model radio involved)
   Set delay adjustment rheostat according to bulletin instructions.
2. .002 condenser (Illus. 28) for short, or short from G_2 to B— **when relay is energized.**
3. Open between G_2 and detector cathode.
4. Open in sensitivity control. (Check continuity from cathode string to B— with relay energized.)
5. Check 2nd I.F. - Procedure listed below.
   (1) Feed a modulated signal from the signal generator into the antenna connector of the receiver through the appropriate series condenser.
   (2) Tune signal generator until signal is heard in receiver. Adjust generator input for an output signal of approximately 1000 micro-volts. On many signal generators this is obtained roughly with the fine attenuator at 1 and the rough attenuator at 1000. If you have no way of knowing how the output of your signal generator is calibrated, set your signal generator coarse attenuator at about the half way mark and vary it about ¼ range each direction, when going through step (6).
   (3) Remove 12AU7 tube from its socket.
   (4) Disconnect the green wire connected between the grid of the 12AU7 (G_2) or its equivalent and the relay at the tube socket terminal.
   (5) Connect VTVM between G_2 and chassis and re-tune the generator frequency for maximum voltage.
   a. No voltage indication. Defective 2nd I.F.
   b. Voltage which is approximately 90% of the voltage from K_2 to chassis - proceed with step (6).
   (6) Change generator signal to an unmodulated signal and vary the signal by a factor of 10 times louder and weaker. On many signal generators this can be accomplished by merely turning the rough attenuator one step on each side of the starting point.
   a. If voltage remains almost constant, increasing slightly with increases in output - the 2nd I.F. is O.K.
   b. If voltage goes through a large variation corresponding to voltage reading taken across detector load—the bucking detector circuit is defective. Check tube containing bucking diode by substitution. If this does not cure trouble, the 2nd I.F. is probably defective.

IF

TUNER DOESN'T STOP, check for

1. Trigger tube defective.
2. Open between grid (G_1) at relay section and plate (P_2) at D. C. amplifier section of trigger tube.
3. 47,000 ohm resistor (Illus. 92) between B+ and K_1 open.
4. Open 120 M ohm resistor (Illus. 91) between G_1 and K_1.

©John F. Rider

Compliments of www.nucow.com

CHART 10

Miscellaneous Defects in the Tuner

I. TUNER DOES NOT STOP ON THE PEAK OF SIGNALS.
- A. Check 2nd IF—See Chart 9.
- B. Check relay drop out current. It should not drop out on current above 3.7 MA.
- C. Check setting of delay adjustment — See set bulletin.

II. TUNER MOMENTARILY STOPS, THEN STARTS AGAIN OR WILL STOP ONLY ON STRONG STATIONS.
- A. This can be caused by improper timing of the relay contacts. To check this, temporarily connect a 10 mfd electrolytic condenser of suitable voltage rating from the terminal on the sensitivity control to which the yellow lead connects, to chassis. If this cures the trouble the defect is due to improper relay point timing and the relay should be replaced.

III. TUNER STOPS ON STATIONS DURING THE TUNER'S RETURN.
- A. The sensitivity control circuit is not being opened during the return cycle, because
  - (1) There is a short to chassis at the sensitivity control terminal of the tuner return switch, or at the sensitivity control.
  - (2) The cathode string is shorted to chassis elsewhere.

IV. THE TUNER WILL JAR OFF STATION ON ROUGH ROADS.
- A. On sets having manual tuning this is due to a defective friction clutch in the planetary arm assy. - Replace the gear train.

V. THE RADIO DOES NOT MUTE IN BETWEEN STATIONS.
- A. This is caused either by a lack of muting voltage appearing on the audio grids due to an open between the oscillator grid and the muting line or a defective audio tube. (Check the Cadillac muting circuit on Chart 7)

VI. TUNER STOPS ONLY ON STRONG SIGNALS AND THE RADIO IS OK.
- A. Heater to cathode leakage of the 6R8 tube in case of Buick or Oldsmobile; the 6AQ7 tube in the case of Cadillac. This can be checked by increasing the "A" voltage. If situation gets worse with increased "A" voltage, change 6R8 or 6AQ7 tube, whichever applies.
- B. Sensitivity control not at maximum sensitivity.

VII. TUNER STOPS ON SIGNALS BUT THE SOUND IS DISTORTED.
Short pin 3 of 6R8 or pin 2 of 6AQ7 (Cadillac) to chassis. If distortion clears, find open between detector cathode and ground through relay contact #2.

SERVICE PARTS INTERCHANGEABILITY

FOR 1950 SIGNAL SEEKING TUNERS

	Buick 980899	Cadillac 7258865	Oldsmobile 982582 982583
Temp. Comp. Cond.	7257567	7257567 (Same)	7257567 (Same)
Dual Trimmer	7242454	7242454 (Same)	7242454 (Same)
Tuning Core	7259201	7259201 (Same)	7259201 (Same)
2nd I.F.	1219602	1219602 (Same)	1219602 (Same)
1st I.F.	1219508	1219508 (Same)	1219508 (Same)
Osc. Coil	7259184	7259184 (Same as Buick)	7259665
Ant. & R.F. Coil	7257979	7257979 (Same)	7257979 (Same)
Det-Aud Tube	6R8	6AQ7GT	6R8 (Same as Buick)
Trigger Tube	12AU7	12AU7 (Same)	12AU7 (Same)
Power Spring	7259055	7259055 (Same)	7259055 (Same)
Selector Bar Switch	7259012	7259012 (Same)	7259012 (Same)
Tuner Return Switch	7259011	7259011 (Same)	7259011 (Same)
Motor Gear Train	1219610	1219610 (Same)	1219610 (Same)
Relay	7259009	7259009 (Same)	7259009 (Same)
Solenoid	1219661	1219661 (Same)	1219661 (Same)

©John F. Rider

Compliments of www.nucow.com

MODEL 416270,
Packard

GENERAL

MOUNTING—All 1950 Packard Cars.

TUBES—Seven, Plus Rectifier.

SPEAKER — 7″ Round, Permanent Magnet.

TUNING—Manual and 5 P.B. Mechanical.

ANTENNA TRIMMER COMPENSATION—0.000060 - 0.000085 Mfd.

Tuning Range—540 - 1600 KC.

PUSHBUTTON SET-UP

Pull pushbutton down and out. Tune in desired station manually. Push button all the way in.

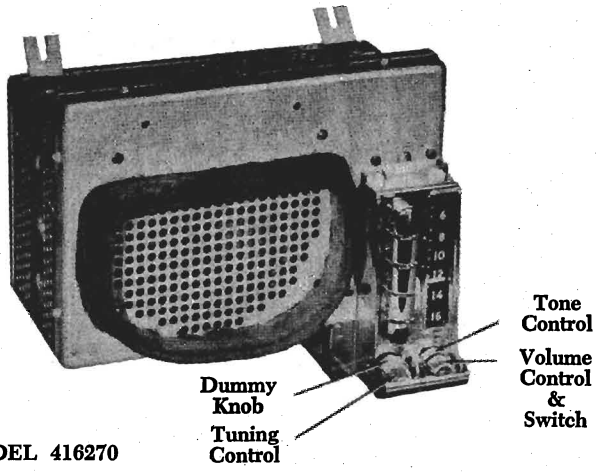

MODEL 416270

ALIGNMENT PROCEDURE:

Output Meter Connection ..... Across Voice Coil
Signal Generator Return ..... To Chassis
Dummy Antenna ..... In Series With Generator
Volume Control ..... Maximum Volume
Tone Control ..... Treble
Generator Output ..... Minimum for Readable Indication

Steps	Series Condenser or Dummy Antenna	Connect To	Signal Generator Frequency	Tune Receiver To	Adjust in Sequence for Max. Output
1	0.1 Mfd.	6SA7 Grid (Pin #8)	260 KC	High Freq. Stop	A, B, C, D
2	0.000068 Mfd.	Antenna Connector	1615 KC	High Freq. Stop	*E, F, G
3	0.000068 Mfd.	Antenna Connector	1000 KC	Signal Gen. Signal	J, K
4	0.000068 Mfd.	Antenna Connector	1615 KC	High Freq. Stop	F, G
5	0.000068 Mfd.	Antenna Connector	1000 KC	Signal Gen. Signal	L**

*Before making this adjustment check the mechanical setting of the oscillator core "H." The slotted end of the core should be 1 25/32″ from the mounting end of the coil form. (This measurement is readily made by inserting a suitable plug in the mounting end of the coil form). If adjustment is necessary, be sure to first dissolve the glyptal seal on the core studs. Core adjustments are made from the mountings end of the coil form with an insulated screwdriver, and core studs should be re-sealed with glyptal or household cement after alignment.

**"L" is the pointer adjustment screw on the pointer connecting link (See tuner drawing). Adjust so pointer reads 1000 KC (on the "10" calibration mark).

With the radio installed and the car antenna plugged in adjust antenna trimmer "G" (See sticker on case) for maximum volume with the radio turned to a weak station near 1400 KC.

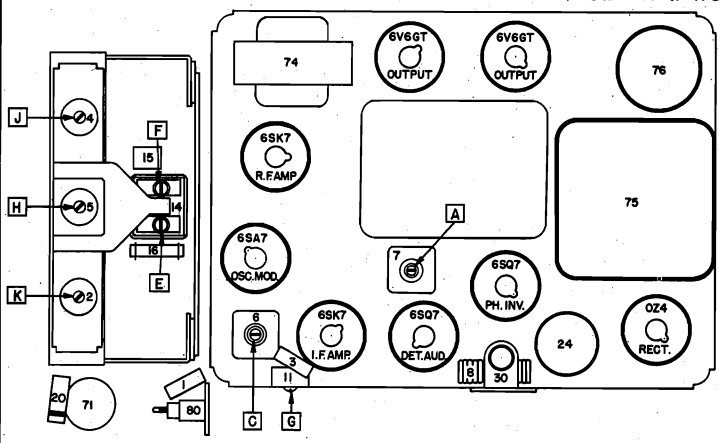

PARTS LAYOUT — TUBE VIEW

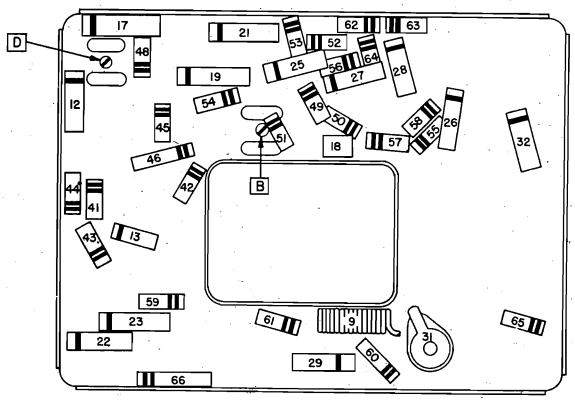

PARTS LAYOUT — CHASSIS VIEW

©John F. Rider

Compliments of www.nucow.com

MODEL 416270,
Packard

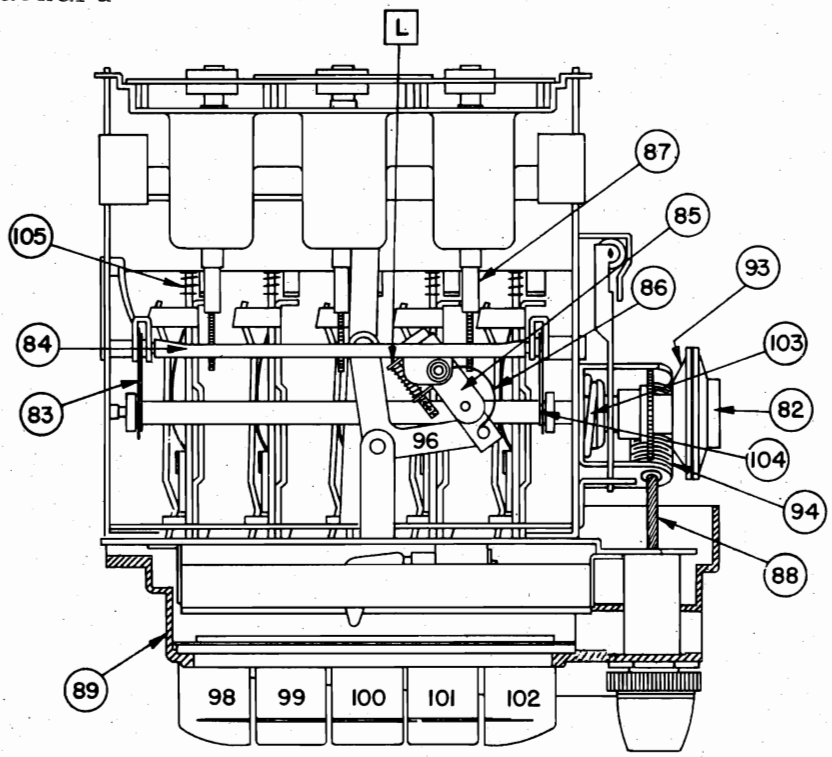

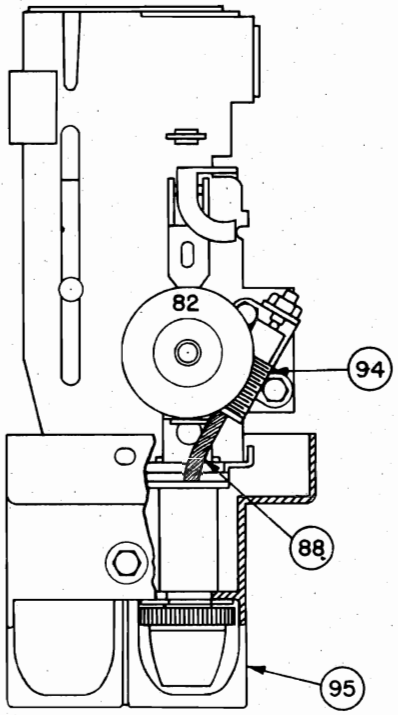

TUNER

TUBE SOCKET VOLTAGE CHART

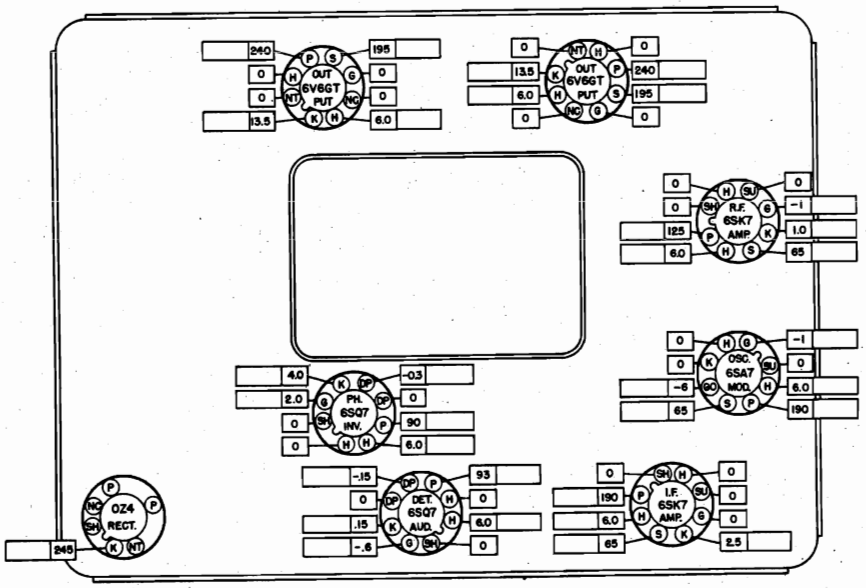

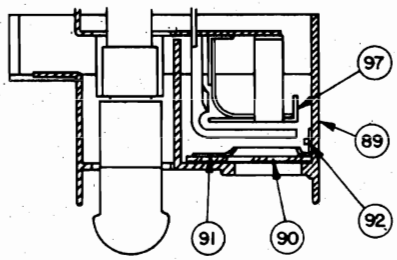

ESCUTCHEON CROSS SECTION

The tube socket voltages, as measured at the factory and under the conditions shown on the schematic diagram, are shown above. The blank spaces are provided so that the serviceman may fill in actual voltage readings as taken with his own equipment. A normal operating radio should be used for these measurements.

Voltmeter resistance_____Ohms Per Volt.

Readings taken with_____Volts at Spark Plate.

All voltages measured from socket terminals to chassis.

©John F. Rider

Compliments of www.nucow.com

MODEL 416270,
Packard

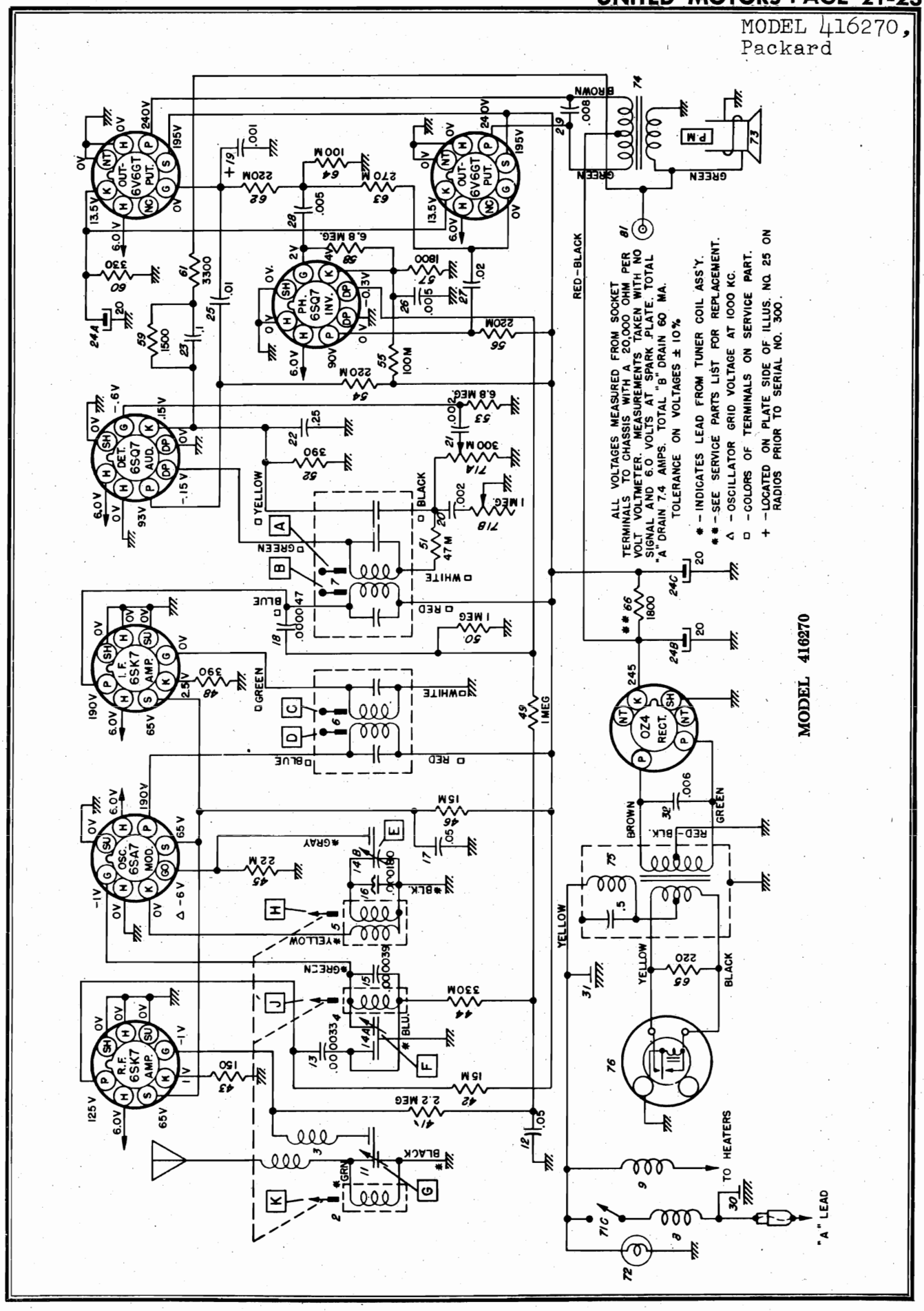

©John F. Rider

Compliments of www.nucow.com

MODEL 416270,
Packard

SERVICE PARTS LIST

Illus. No.	Production Part No.	Service Part No.	Description
		ELECTRICAL PARTS	
		Coils	
1	7258502	7258502	Antenna Series Choke
2	7258914	7258914	Antenna
3	7240251	7240251	Antenna Spark Choke
4	7258914	7258914	R. F.
5	7259687	7259687	Oscillator
6	7258849	1219508	1st I. F. Assembly
7	7258850	1219509	2nd I. F. Assembly
8	7259620	7259620	"A" Spark Choke
9	7259619	1217846	Hash Choke
		Condensers	
11	7259597	7259597	Antenna Trimmer
12	7236842	E503	.05 Mfd. 200 V. Tubular
13	7258222	G330	.000033 Mfd. Molded
14	7242454	7242454	Dual Trimmer
14A			R. F. Section
14B			Oscillator
15	7258223	G390	.000039 Mfd. Ceramic
16	7257424	7257424	.000180 Mfd. Compensating
17	7258125	E503	.05 Mfd. 400 V Tubular
18	1219551	G470	.000047 Mfd. Molded
19	1218883	E102	.001 Mfd. 600 V Tubular
20	7237836	E202	.002 Mfd. 600 V Tubular
21	7237836	E202	.002 Mfd. 600 V Tubular
22	1211202	E254	.25 Mfd. 200 V. Tubular
23	7238789	E104	.1 Mfd. 200 V Tubular
24	7240724	M908	Electrolytic
24A			20 Mfd. 25 V
24B			20 Mfd. 400 V
24C			20 Mfd. 400 V
25	1209309	E103	.01 Mfd. 400 V Tubular
26	7230767	E502	.005 Mfd. 600 V Tubular
27	7238882	E203	.02 Mfd. 400 V Tubular
28	7230767	E502	.005 Mfd. 600 V Tubular
29	1219594	H802	.008 Mfd. 800 V Tubular
30	7259600	7259600	Spark Plate-"A" Connector Choke Assy.
31	1217848	1217848	Chassis Plate Assy.
32	7240906	H602	.006 Mfd. 1600 V Tubular
		Resistors	
41	1211147	A225	2.2 Megohms ½ W Insulated
42	7237595	B153	15,000 Ohms 1 W Insulated
43	1213220	A151	150 Ohms ½ W Insulated
44	7240732	A334	330,000 Ohms ½ W Insulated
45	1211192	A223	22,000 Ohms ½ W Insulated
46	7233653	C153	15,000 Ohms 2 W Insulated
48	1213482	A391	390 Ohms ½ W Insulated
49	7238873	A105	1 Megohm ½ W Insulated
50	7238873	A105	1 Megohm ½ W Insulated
51	7240731	A473	47,000 Ohms ½ W Insulated
52	1213482	A391	390 Ohms ½ W Insulated
53	7241937	A685	6.8 Megohms ½ W Insulated
54	1214555	A224	220,000 Ohms ½ W Insulated
55	1213270	A104	100,000 Ohms ½ W Insulated
56	1214555	A224	220,000 Ohms ½ W Insulated
57	7241616	7241616	1800 Ohms ½ W Insulated
58	7241937	A685	6.8 Megohms ½ W Insulated
59	1213237	A152	1500 Ohms ½ W Insulated
60	7233773	C331	330 Ohms 1 W Wire Wound
61	1213481	A332	3300 Ohms ½ W Insulated
62	1214555	A224	220,000 Ohms ½ W Insulated
63	1214556	A274	270,000 Ohms ½ W Insulated
64	1213270	A104	100,000 Ohms ½ W Insulated
65	7237994	B221	220 Ohms 1 W Insulated
66	1214573	B562	1800 Ohms 2 W Wire Wound (or Replace
		C272	with 2700 Ohms 2 W and 5600 Ohms 1 W in Parallel)

©John F. Rider

Compliments of www.nucow.com

MODEL 416270,
Packard

SERVICE PARTS LIST

Illus. No.	Production Part No.	Service Part No.	Description
		Tubes	
	7237751	5229	6SK7
	7237752	5222	6SA7
	7237753	5231	6SQ7
	1213793	5241	6V6GT
	1211924	5003	OZ4
		Miscellaneous Electrical	
71	7259601	7259601	Control - Volume, Tone, & Switch
71A			Volume Control
71B			Tone Control
71C			Switch
72	125588	55	Lamp - Dial
73	7259608	7259608	Speaker P. M.
74	7259615	7259615	Transformer - Output
75	7259614	6060	Transformer - Power
76	7239124	8542	Vibrator - Non-Synchronous
		MECHANICAL PARTS	
		(Chassis)	
80	7239475	7239475	Socket - Antenna
	1219662	1219662	Socket - Dial Light
	7236279	7236279	Socket - Octal Tube
81	1216747	1216747	Socket - Rear Seat Speaker
	7239125	7239125	Socket - Vibrator
		(Tuner)	
	147481	147481	Ball Bearings (10)
82	7258072	7258072	Clutch Disc-Driven
83	7258203	7258203	Connecting Link-Core Bar
84	7258210	7258210	Core Guide Bar
85	7256271	7256271	Connecting Link - Pointer
86	7255992	7255992	Spring - Pointer Connecting Link
87	7258468	7258468	Core - Iron Tuning
88	7259606	7259606	Drive Shaft - Manual
89	7259570	7259570	Escutcheon Assy.
90	7259569	7259569	Dial Glass
91	7259567	7259567	Dial Backplate
92	7259565	7259565	Dial Retainer (2)
	7259633	7259633	Filter - Dial Light
93	7259539	7259539	Gear and Bushing - Clutch
94	7259556	7259556	Gear and Bracket - Worm
95	7259568	7259568	Guard - Control Knob
	7259656	7259656	Knob - Control
	7259550	7259550	Knob - Tone & Dummy
96	7259584	7259584	Pointer Assembly
	1219663	1219663	Pointer Tip Plate
97	7259676	7259676	Pointer Backplate
98	1219664	1219664	Push Button and Slide No. 1
99	1219665	1219665	Push Button and Slide No. 2
100	1219666	1219666	Push Button and Slide No. 3
101	1219667	1219667	Push Button and Slide No. 4
102	1219668	1219668	Push Button and Slide No. 5
103	7258756	7258756	Spring - Clutch
104	7257415	7257415	Spring - Core Bar Connecting Link
105	7259540	7259540	Spring - Slide Return
		INSTALLATION PARTS	
	7259642	7259642	"A" Lead and Fuse Connector
	7259644	7259644	Capacitor - Generator
	7259643	7259643	Capacitor - Ignition Coil
	7259646	7259646	Distributor Suppressor
	147685	147685	Fuse 14 Amps

©John F. Rider

Compliments of www.nucow.com

MODEL 416387,
Packard

SUBJECT: SERVICE INSTRUCTIONS - PACKARD MODEL 416387

GENERAL

MOUNTING—All 24 Series Packard Cars.

TUBES—Seven, Plus Rectifier.

SPEAKER — 6" x 9" Elliptical, Permanent Magnet.

TUNING—Manual and 5 P.B. Mechanical.

ANTENNA TRIMMER COMPENSATION—0.000050 - 0.000090 Mfd.

TUNING RANGE—540 - 1600 KC.

PUSHBUTTON SET-UP

Pull pushbutton to the left and out. Tune in desired station manually. Push button all the way in.

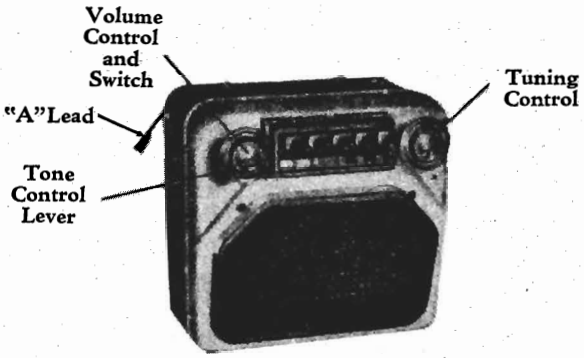

MODEL 416387

ALIGNMENT PROCEDURE:

Output Meter Connection ..... Across Voice Coil

Signal Generator Return ..... To Chassis

Dummy Antenna ..... In Series With Generator

Volume Control ..... Maximum Volume

Tone Control ..... Treble

Generator Output ..... Minimum for Readable Indication

Steps	Series Condenser or Dummy Antenna	Connect To	Signal Generator Frequency	Tune Receiver To	Adjust in Sequence for Max. Output
1	0.1 Mfd.	6SA7 Grid (Pin #8)	260 KC	High Freq. Stop	A, B, C, D
2	0.000068 Mfd.	Antenna Connector	1615 KC	High Freq. Stop	*E, F, G
3	0.000068 Mfd.	Antenna Connector	1000 KC	Signal Gen. Signal	J, K
4	0.000068 Mfd.	Antenna Connector	1615 KC	High Freq. Stop	F, G
5	0.000068 Mfd.	Antenna Connector	1000 KC	Signal Gen. Signal	L**

*Before making this adjustment check the mechanical setting of the oscillator core "H." The slotted end of the core should be 1 25/32" from the mounting end of the coil form. (This measurement is readily made by inserting a suitable plug in the mounting end of the coil form). If adjustment is necessary, be sure to first dissolve the glyptal seal on the core studs. Core adjustments are made from the mountings end of the coil form with an insulated screwdriver, and core studs should be re-sealed with glyptal or household cement after alignment.

**"L" is the pointer adjustment screw on the pointer connecting link (See tuner drawing). Adjust so pointer reads 1000 KC (on the "10" calibration mark).

With the radio installed and the car antenna plugged in adjust antenna trimmer "G" (See sticker on case) for maximum volume with the radio turned to a weak station between 600 and 1000 KC.

©John F. Rider

Compliments of www.nucow.com

MODEL 416387,
Packard

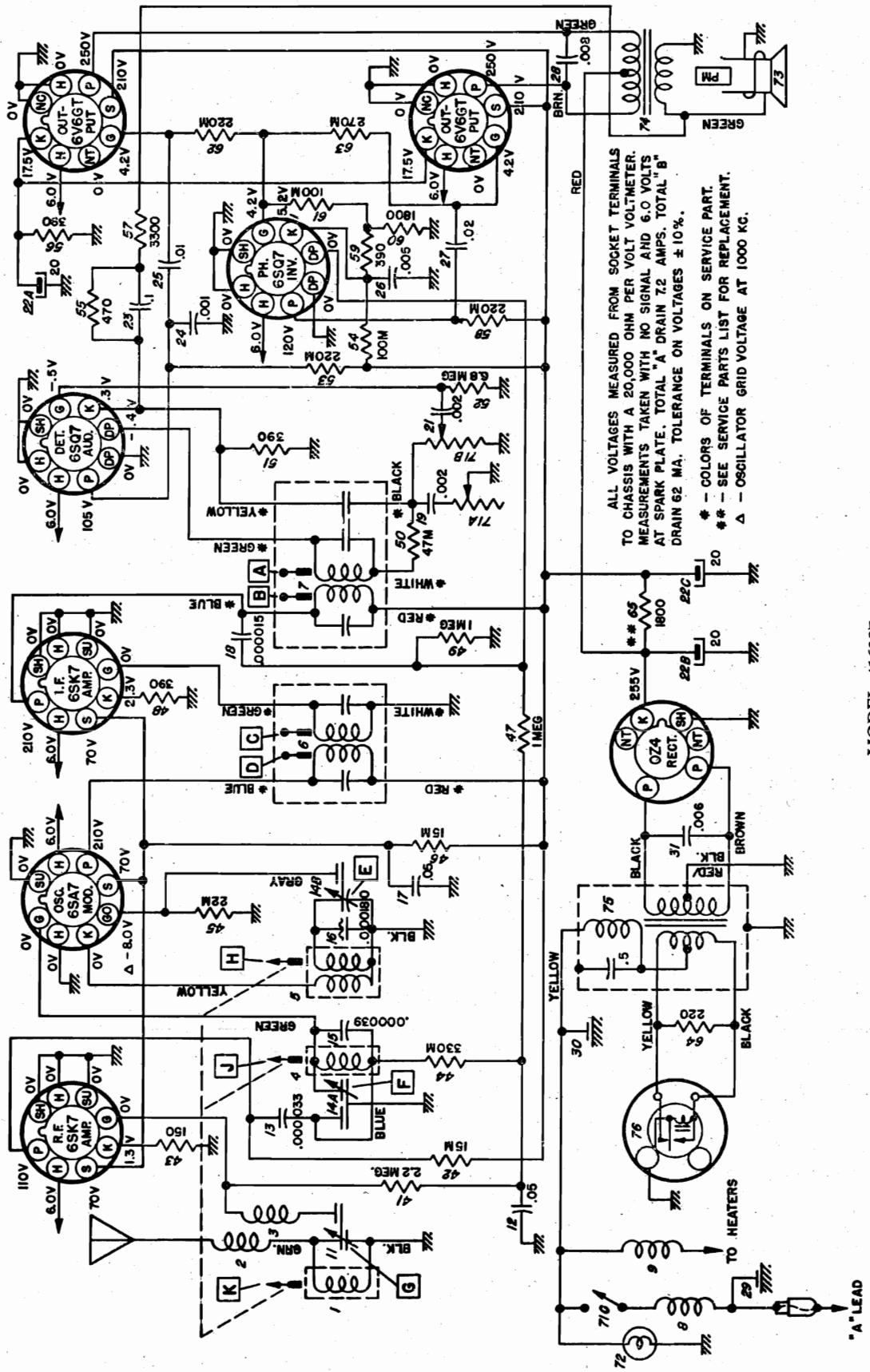

©John F. Rider

Compliments of www.nucow.com

MODEL 416387,
Packard

The tube socket voltages, as measured at the factory and under the conditions shown on the schematic diagram, are shown

All voltages measured from socket terminals to chassis.

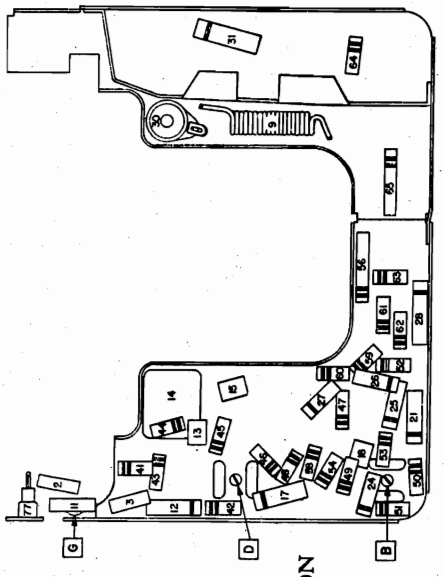

PARTS LAYOUT — CHASSIS VIEW

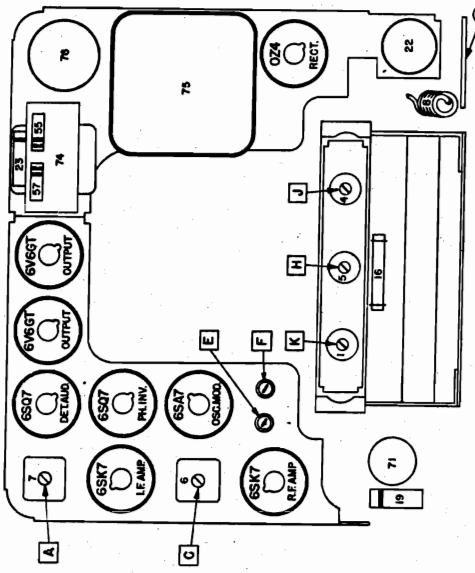

PARTS LAYOUT — TUBE VIEW

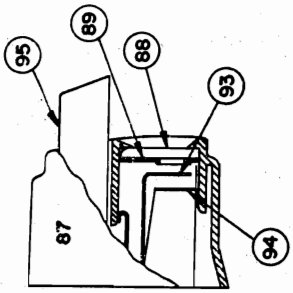

ESCUTCHEON CROSS SECTION

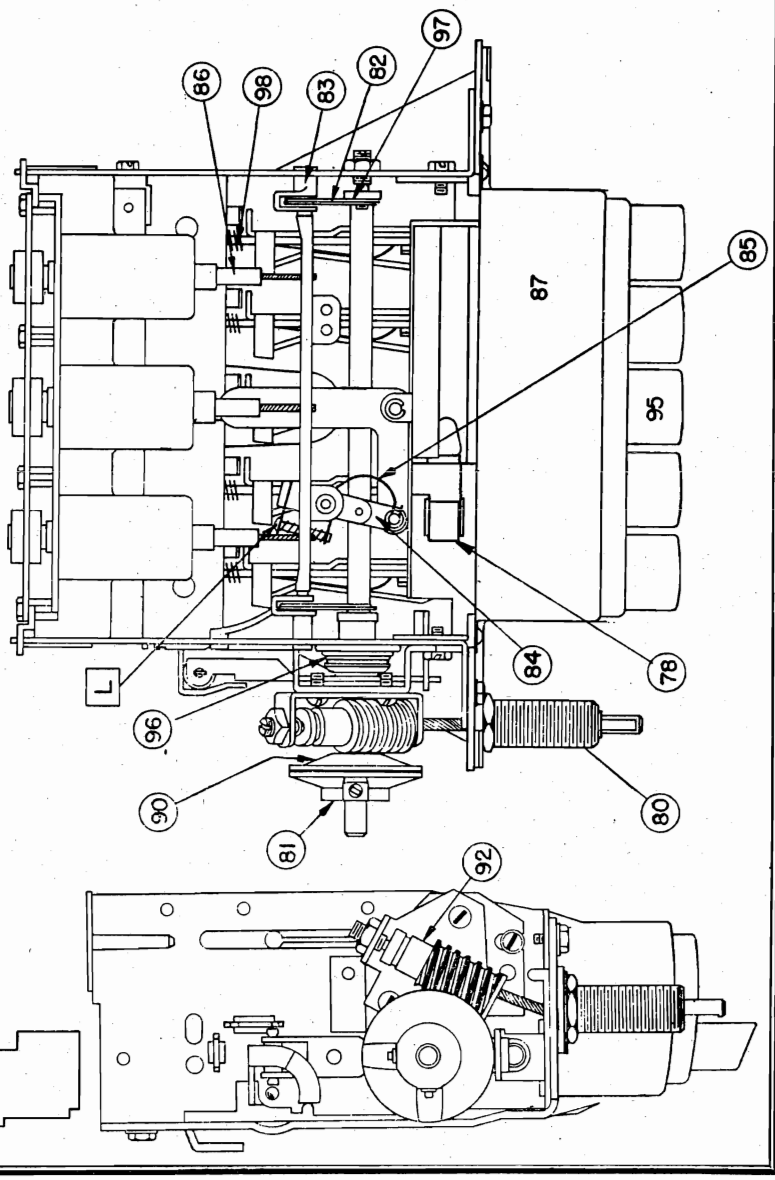

TUBE SOCKET VOLTAGE CHART

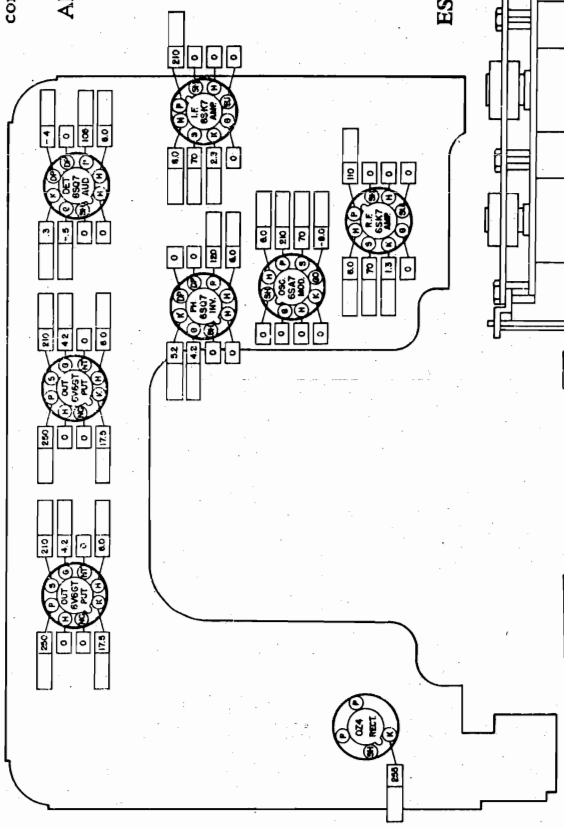

©John F. Rider

Compliments of www.nucow.com

MODEL 416387,
Packard

SERVICE PARTS LIST

Illus. No.	Production Part No.	Service Part No.	Description
			ELECTRICAL PARTS
			Coils
1	7258914	7258914	Antenna
2	7255738	7255738	Antenna Series Choke
3	7240251	7240251	Antenna Spark Choke
4	7258914	7258914	R.F.
5	7259687	7259687	Oscillator
6	7258849	1219508	1st I.F.
7	7258850	1219509	2nd I.F.
8	7259187	7259187	"A" Spark Choke
9	7237846	1217846	Hash Choke
			Condensers
11	7260158	7260158	Antenna Trimmer
12	7236842	E-503	.05 mfd. 200V Tubular
13	7258222	G-330	.000033 mfd. Molded
14	7242454	7242454	Dual Trimmer
14A			R.F.Section
14B			Oscillator
15	7258221	G-390	.000039 mfd. Molded
16	7257424	7257424	.000180 mfd. Compensating
17	7258125	E-503	.05 mfd. 400V Tubular
18	7230955	G-150	.000015 mfd. Molded
19	7237836	E-202	.002 mfd. 600V Tubular
21	7237836	E-202	.002 mfd. 600V Tubular
22	7260065	7260065	Electrolytic
22A			20 mfd. 25V
22B			20 mfd. 400V
22C			20 mfd. 400V
23	7238789	E-104	.1 mfd. 200V Tubular
24	1218883	E-102	.001 mfd. 600V Tubular
25	1209309	E-103	.01 mfd. 400V Tubular
26	7230767	E-502	.005 mfd. 600V Tubular
27	7238882	E-203	.02 mfd. 400V Tubular
28	1219594	H-802	.008 mfd. 800V Tubular
29	7241259	7241259	Spark Plate
30	1217848	1217848	Chassis Plate
31	7240906	H-602	.006 mfd. 1600V Tubular
			Resistors
41	1211147	A-225	2.2 megohms ½ W Insulated
42	7237595	B-153	15,000 ohms 1 W Insulated
43	1213220	A-151	150 ohms ½ W Insulated
44	7240732	A-334	330,000 ohms ½ W Insulated
45	1211192	A-223	22,000 ohms ½ W Insulated
46	7233653	C-153	15,000 ohms 2 W Insulated
47	7238873	A-105	1 megohm ½ W Insulated
48	1213482	A-391	390 ohms ½ W Insulated
49	7238873	A-105	1 megohm ½ W Insulated
50	7240731	A-473	47,000 ohms ½ W Insulated
51	1213482	A-391	390 ohms ½ W Insulated
52	7241937	A-685	6.8 megohms ½ W Insulated
53	1214555	A-224	220,000 ohms ½ W Insulated
54	1213270	A-104	100,000 ohms ½ W Insulated
55	1213486	A-471	470 ohms ½ W Insulated
56	1219690	1219690	390 ohms 2 W Wire Wound
57	1213481	A-332	3300 ohms ½ W Insulated
58	1214555	A-224	220,000 ohms ½ W Insulated
59	1213482	A-391	390 ohms ½ W Insulated
60	7241616	7241616	1800 ohms ½ W Insulated
61	1213270	A-104	100,000 ohms ½ W Insulated
62	1214555	A-224	220,000 ohms ½ W Insulated
63	1214556	A-274	270,000 ohms ½ W Insulated
64	1219738	B-221	220 ohms 1 W Insulated
65	1214573	C-272 / B-562	1800 ohms 2 W Wire Wound (or replace with 2700 ohms 2 W and 5600 ohms 1 W in parallel)

©John F. Rider

Compliments of www.nucow.com

MODEL 416387,
Packard

SERVICE PARTS LIST

Illus. No.	Production Part No.	Service Part No.	Description
		Tubes	
	7237751	5229	6SK7
	7237752	5222	6SA7
	7237753	5231	6SQ7
	1213793	5241	6V6GT
	1211924	5003	0Z4
		Miscellaneous Electrical	
71	7260139	7260139	Control - Volume, Tone and Switch
71A			Volume Control
71B			Tone Control
71C			Switch
72	187189	44	Light - Dial
73	7260362	7260362	Speaker - 6 x 9 p. m.
74	7260167	7260167	Transformer - Output
75	7259375	7255881	Transformer - Power
76	7239124	8542	Vibrator - Non-Synchronous
		MECHANICAL PARTS	
		Chassis	
77	7256742	7256742	Socket - Antenna
78	1219747	1219747	Socket - Dial Light
	7236279	7236279	Socket - Octal Tube
	7239125	7239125	Socket - Vibrator
		Tuner	
	147481	147481	Ball Bearings (10)
80	7260163	7260163	Bushing & Manual Drive Shaft Assy.
	7260162	7260162	Manual Drive Shaft
81	7258072	7258072	Clutch Disc - Driven
82	7258203	7258203	Connecting Link - Core Bar
83	7260403	7260403	Core Guide Bar
84	7256271	7256271	Connecting Link - Pointer
85	7255992	7255992	Spring - Pointer Connecting Link
86	7258468	7258468	Core - Iron Tuning
87	7260325	7260325	Escutcheon Assy.
88	7260141	7260141	Dial
89	7260125	7260125	Dial Backplate
	7259494	7259494	Retainer Spring - Left Hand
	7259495	7259495	Retainer Spring - Right Hand
90	7256495	7256495	Gear & Bushing - Clutch
92	7260212	7260212	Gear & Bracket - Worm
93	7260199	7260199	Pointer Assembly
94	7260265	7260265	Pointer Backplate
95	1219200	1219200	Push Button and Slide Assy.
96	7258756	7258756	Spring - Clutch
97	7257415	7257415	Spring - Core Bar Connecting Link
98	7255984	7255984	Spring - Slide Return
		INSTALLATION PARTS	
	7260148	7260148	"A" Lead and Fuse Holder Assy.
	7259644	7259644	Condenser - Generator
	7259643	7259643	Condenser - Ignition Coil
	7259646	6007	Distributor Suppressor
	147685	147685	Fuse - 14 Amps
	7260187	7260187	Knob - Control
	7260147	7260147	Lever - Tone Control
	7260149	7260149	Trimplate - Control Knob

©John F. Rider

Compliments of www.nucow.com

MODEL 416394, Packard

GENERAL

MOUNTING—All 24 Series Packard Cars.

TUBES—Seven, Plus Rectifier and Trigger.

SPEAKER — 6" x 9" Elliptical, Permanent Magnet.

TUNING—Electronic and Manual.

ANTENNA TRIMMER COMPENSATION — 0.000058 - 0.000090 Mfd.

TUNING RANGE—540 - 1600 KC.

PUSHBUTTON SET-UP

No pushbutton set-up is necessary. However, the number of stations on which the tuner will stop can be controlled by the use of the Sensitivity Control.

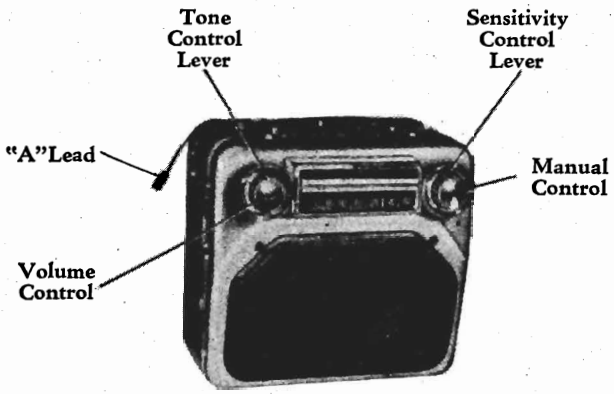

MODEL 416394

SIGNAL SEEKING TUNER ALIGNMENT PROCEDURE:

NOTE: When aligning the signal seeker tuner type radio, be sure to use a vacuum tube voltmeter as indicated and be sure to follow the alignment sequence given—(Notice that the primary of the 2nd I.F. is aligned first.)

Output Meter Connection ..... VTVM From [2] To Chassis (see parts layout page 2)

Generator Return ..... Receiver Chassis

Dummy Antenna ..... In Series With Generator

Volume Control ..... Maximum Volume

Sensitivity Control ..... Maximum Sensitivity

Tone Control ..... Treble

Generator Output ..... Not To Exceed 2 Volts at VTVM

Step	Dummy Antenna	Connect To	Signal Generator Frequency	Tune Receiver To	Adjust in Sequence for Max. Output
1	0.1 Mfd.	6SA7 Grid (Pin 8)	260 KC	High Freq. Stop	A, B, C, D
2	0.000068 Mfd.	Antenna Connector	1615 KC	High Freq. Stop	*E, F, G
3	0.000068 Mfd.	Antenna Connector	600 KC	Signal Gen. Signal	J, K
4	0.000068 Mfd.	Antenna Connector	1615 KC	Signal Gen. Signal	F, G
5	0.000068 Mfd.	Antenna Connector	1000 KC	Signal Gen. Signal	**L

*Before making this adjustment, check the setting of oscillator core "H." The rear of the core should be $1\frac{25}{32}$" from the mounting end of the coil form. This measurement is readily made by inserting a suitable plug in the mounting end of the coil form. The core adjustment is made from the mounting end of the coil form with an insulated screwdriver. (It will be necessary to steady the core guide bar by applying a downward pressure at the antenna core end of the bar while making these adjustments.) If this adjustment is necessary, first dissolve the glyptal seal on the core stud and be sure to re-seal after making the adjustment.

**"L" is the pointer adjustment screw on the end of the core guide bar—adjust so pointer reads 1000 KC.

With the radio installed and the antenna plugged in, adjust antenna trimmer "G" (See sticker on case) for maximum volume with the radio tuned to a weak station from 600 to 1000 KC.

©John F. Rider

Compliments of www.nucow.com

MODEL 416394, Packard

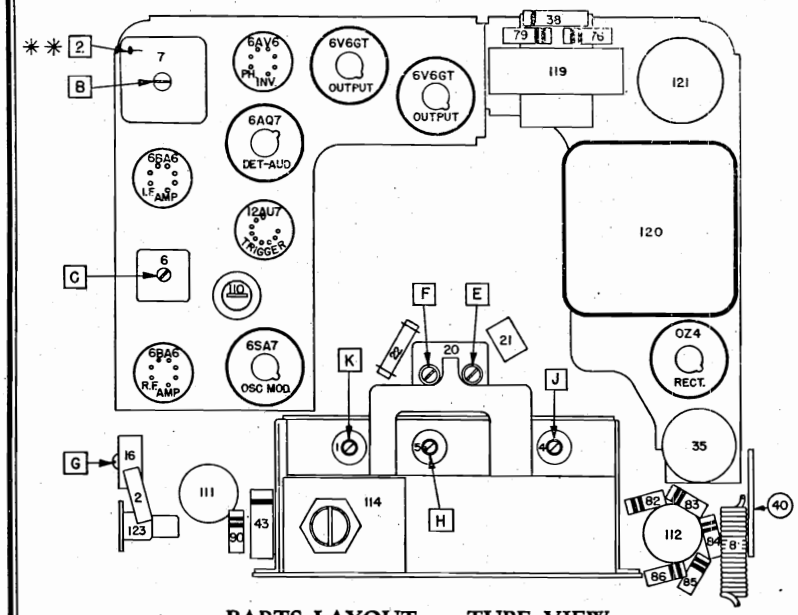

PARTS LAYOUT — TUBE VIEW

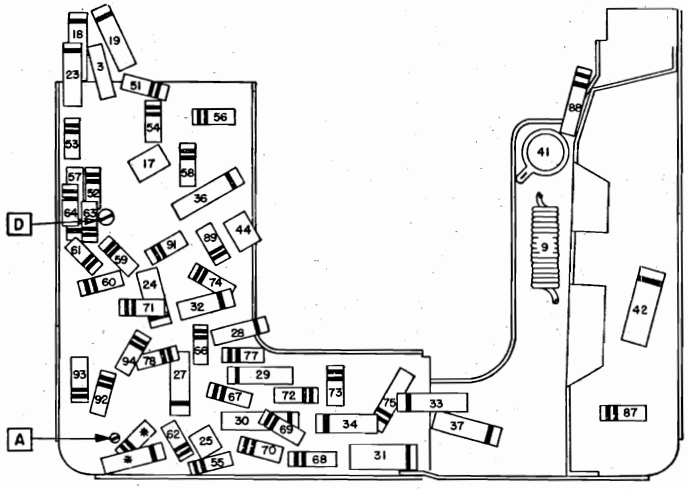

PARTS LAYOUT — CHASSIS VIEW

*Condenser and resistor are included in the 2nd I.F. Coil Assembly.

**Connect a VTVM from this point to ground for output indications during alignment.

TUBE SOCKET VOLTAGE CHART

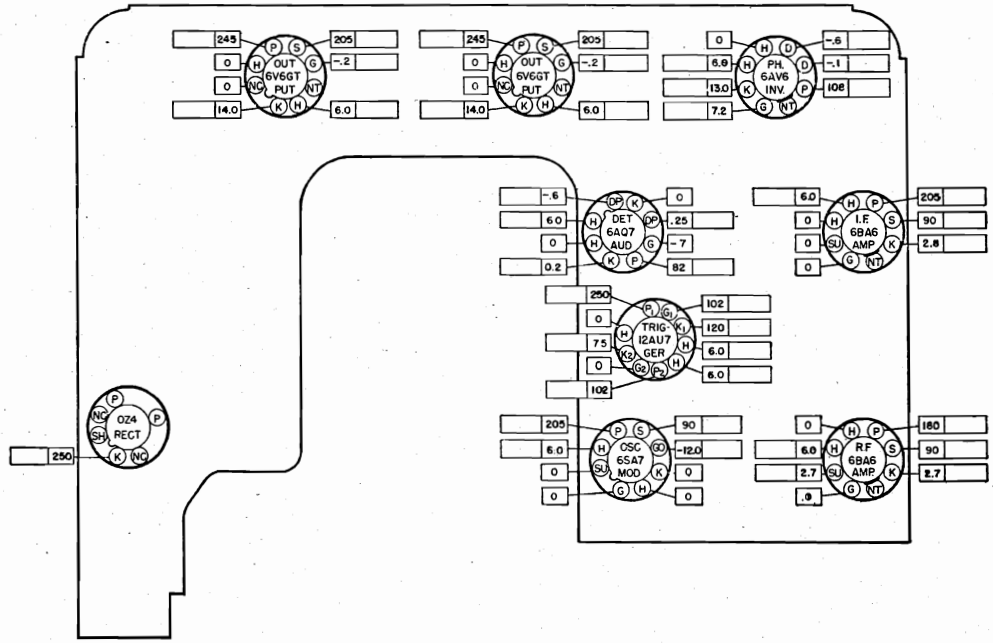

The tube socket voltages, as measured at the factory and under the conditions shown on the schematic diagram, are shown above. The blank spaces are provided so that the serviceman may fill in actual voltage readings as taken with his own equipment. A normal operating radio should be used for these measurements.

Voltmeter resistance.....Ohms Per Volt.

Readings taken with.....Volts At Spark Plate.

All voltages measured from socket terminals to chassis.

TUNER ADJUSTMENT PROCEDURE:

CATHODE DELAY ADJUSTOR (Illustration #110) (This adjustment should be necessary only if the delay adjustor has been replaced or the adjustment has definitely been proven to be faulty).

With exactly 6.0 volts on the spark plate, set the delay adjustor (Illus. 110) so that the voltage at K_2 of the 12AU7 trigger tube (Pin #8) is exactly 7.5 volts.

NOTE: For all other tuner adjustments, see Bulletin 6D-620.

©John F. Rider

Compliments of www.nucow.com

MODEL 416394,
Packard

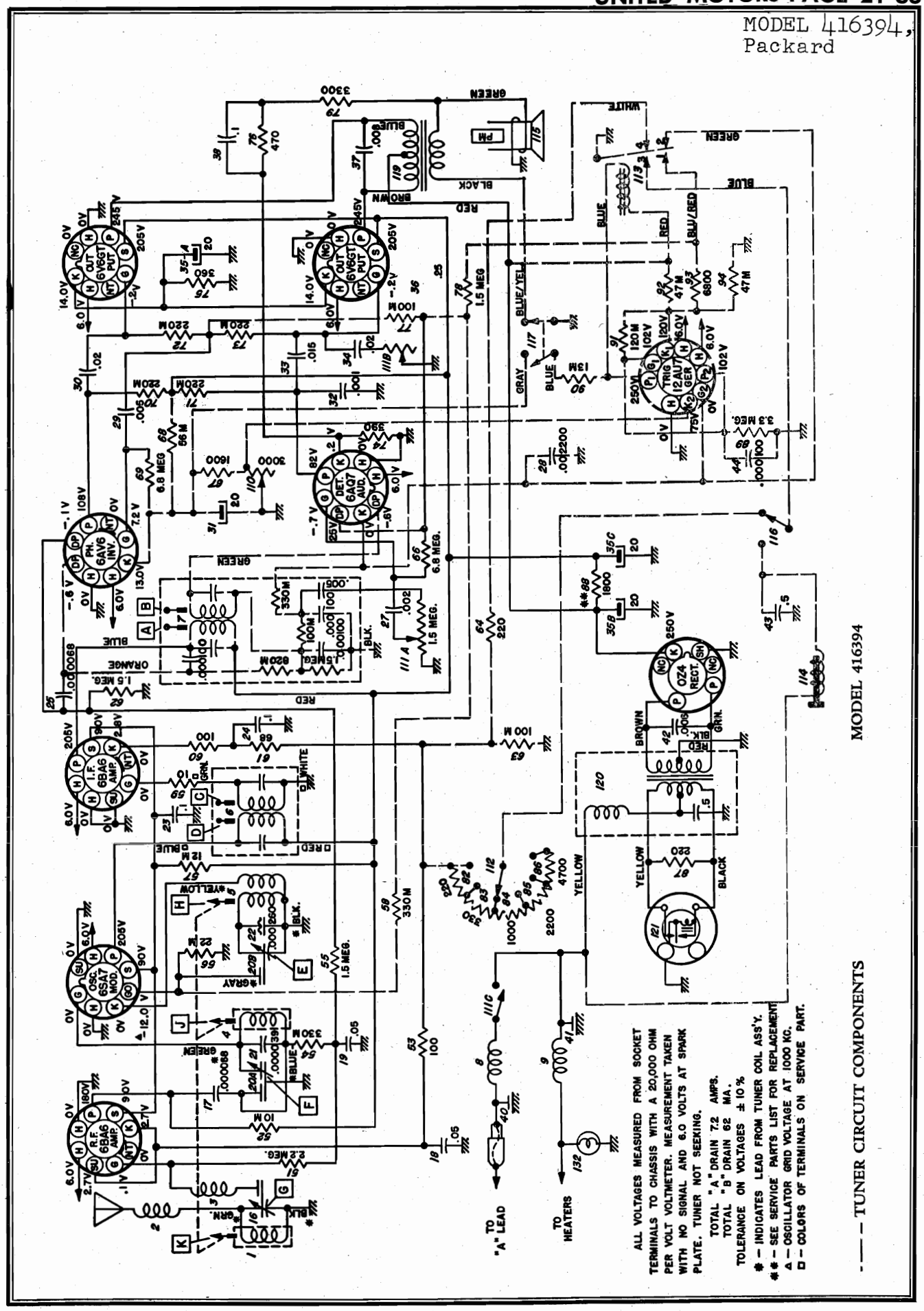

©John F. Rider

Compliments of www.nucow.com

MODEL 416394,
Packard

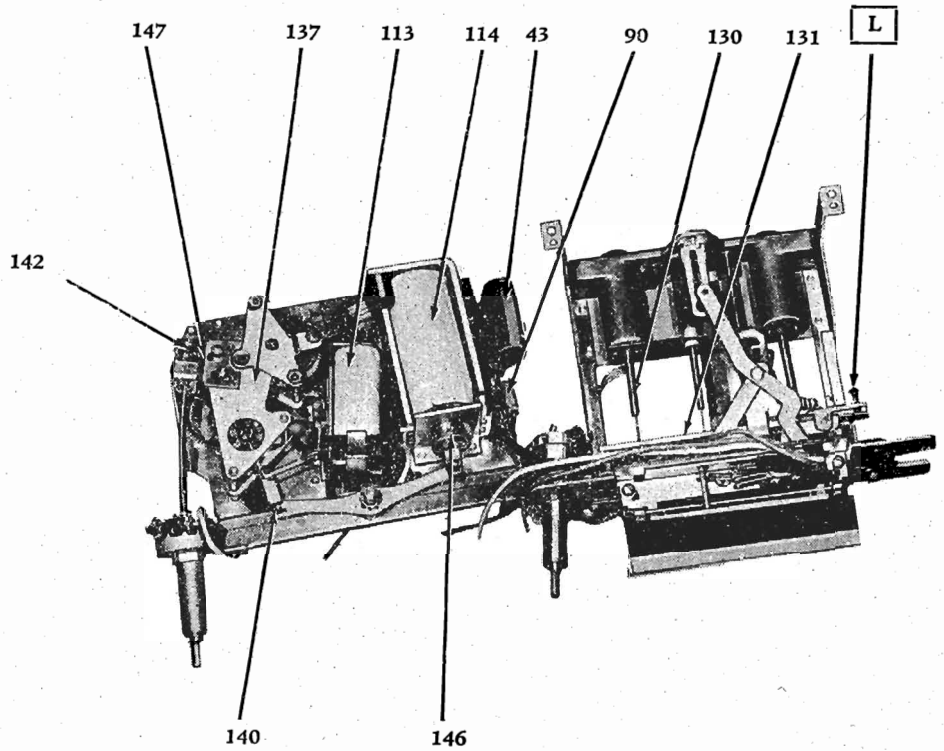

TUNER — OPEN

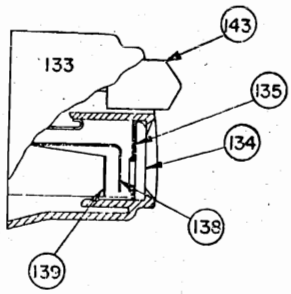

ESCUTCHEON
CROSS-SECTION

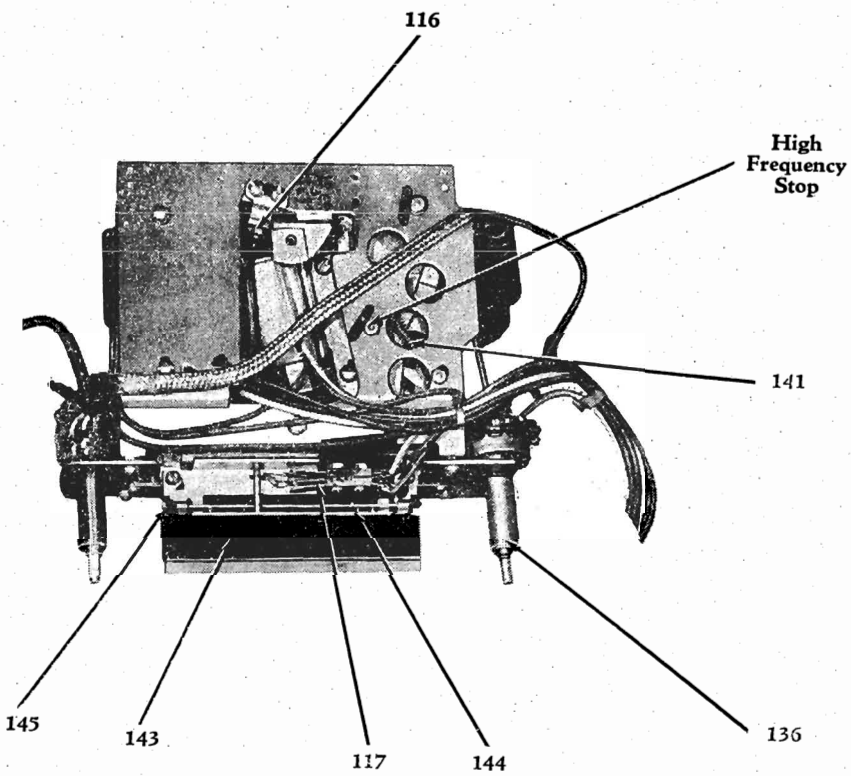

TUNER

©John F. Rider

Compliments of www.nucow.com

MODEL 416394, Packard

SERVICE PARTS LIST

Illus. No.	Production Part No.	Service Part No.	Description
			ELECTRICAL PARTS
			Coils
1	7257979	7257979	Antenna
2	7255738	7255738	Antenna Series Choke
3	7240251	7240251	Antenna Spark Choke
4	7257979	7257979	R. F.
5	7259184	7259184	Oscillator
6	7259790	1219508	1st I. F.
7	7259290	1219602	2nd I. F.
8	7259187	7259187	"A" Spark Choke
9	7256931	1217846	Hash Choke
			Condensers
16	7260158	7260158	Antenna Trimmer
17	1219550	G 680	.000068 mfd. Molded
18	1210697	E 503	.05 mfd. 200V Tubular
19	1210697	E 503	.05 mfd. 200V Tubular
20	7242454	7242454	Dual Trimmer
20A			R. F. Section
20B			Oscillator Section
21	7258221	G 390	.000039 mfd. Molded
22	7257567	7257567	.000260 mfd. Compensating
23	7238788	E 104	.1 mfd. 400V Tubular
24	7238789	E 104	.1 mfd. 200V Tubular
25	1219550	G 680	.000068 mfd. Molded
27	7237836	E 202	.002 mfd. 600V Tubular
28	1219553	1219553	.0022 mfd. 600V Tubular
29	7230767	E 502	.005 mfd. 600V Tubular
30	7238882	E 203	.02 mfd. 400V Tubular
31	1219660	1219660	20 mfd. 50V Electrolytic
32	1218883	E 102	.001 mfd. 600V Tubular
33	7237719	7237719	.015 mfd. 600V Tubular
34	7238882	E 203	.02 mfd. 400V Tubular
35	7240724	M 908	Electrolytic
35A			20 mfd. 25 Volt
35B			20 mfd. 400 Volt
35C			20 mfd. 400 Volt
36	1209817	E 254	.25 mfd. 200V Tubular
37	1219594	H 802	.008 mfd. 800V Tubular
38	7238789	E 104	.1 mfd. 200V Tubular
40	7241259	7241259	Spark Plate
41	1217848	1217848	Chassis Plate
42	7240906	H 602	.006 mfd. 1600V Tubular
43	1219511	E 504	.5 mfd. 100V Tubular
44	1219499	G 101	.000100 mfd. Molded
			Resistors
51	1211147	A 225	2.2 Megohms ½W Insulated
52	1211085	B 103	10,000 Ohms 1W Insulated
53	1213217	A 101	100 Ohms ½W Insulated
54	7240732	A 334	330,000 Ohms ½W Insulated
55	1213283	A 155	1.5 Megohms ½W Insulated
56	1211192	A 223	22,000 Ohms ½W Insulated
57	1212491	1212491	12,000 Ohms 2W Insulated
58	1214557	A 334	330,000 Ohms ½W Insulated
59	1215107	A 100	10 Ohms ½W Insulated
60	1213217	A 101	100 Ohms ½W Insulated
61	1215558	1215558	68 Ohms ½W Insulated
62	1213283	A 155	1.5 Megohms ½W Insulated
63	1213270	A 104	100,000 Ohms ½W Insulated
64	7237835	A 221	220 Ohms ½W Insulated
66	7241937	A 685	6.8 Megohms ½W Insulated
67	1219504	1219504	1600 Ohms ½W Insulated
68	1213509	1213509	56,000 Ohms 1W Insulated
69	7241937	A 685	6.8 Megohms ½W Insulated
70	1214555	A 224	220,000 Ohms ½W Insulated
71	1214555	A 224	220,000 Ohms ½W Insulated
72	1214555	A 224	220,000 Ohms ½W Insulated
73	1214555	A 224	220,000 Ohms ½W Insulated
74	1213482	A 391	390 Ohms ½W Insulated
75	7234563	7234563	360 Ohms 1W Wire Wound
76	1213486	A 471	470 Ohms ½W Insulated
77	1213270	A 104	100,000 Ohms ½W Insulated
78	1213283	A 155	1.5 Megohm ½W Insulated
79	1213481	A 332	3300 Ohms ½W Insulated
82	7237835	A 221	220 Ohms ½W Insulated
83	1213224	A 331	330 Ohms ½W Insulated
84	1213235	A 102	1,000 Ohms ½W Insulated
85	1214545	A 222	2200 Ohms ½W Insulated
86	1214547	A 472	4700 Ohms ½W Insulated

©John F. Rider

Compliments of www.nucow.com

MODEL 416394,
Packard

SERVICE PARTS LIST

Illus. No.	Production Part No.	Service Part No.	Description
		Resistors (Continued)	
87	7237994	B 221	220 Ohms 1W Insulated
88	1214573	C 272 B 562	1800 Ohm 2W Wire Wound (Use 2700 Ohm 2W and 5600 Ohm 1W in parallel)
89	1214564	A 335	3.3 Megohm ½W Insulated
90	7231539	7231539	13,000 Ohms 1W Insulated
91	1213271	1213271	120,000 Ohms ½W Insulated
92	1216157	B 473	47,000 Ohms 1W Insulated
93	1216154	1216154	6800 Ohms 1W Insulated
94	1216157	B 473	47,000 Ohms 1W Insulated
		Tubes	
	1217690	5252	6BA6
	7237752	5222	6SA7
	1218506	5262	6AV6
	1219484	5278	6AQ7GT
	1213793	5241	6V6GT
	1211924	5003	OZ4
	1219485	5328	12AU7
		MISCELLANEOUS ELECTRICAL	
	7260328	7260328	"A" Lead and Fuse Holder Assy. (Male)
110	7259408	7259408	Adjustor - Cathode Delay
111	7260230	7260230	Control - Volume - Tone - Switch
111A			Volume Control
111B			Tone Control
111C			Switch
112	7260222	7260222	Control - Sensitivity
113	7259009	7259009	Relay
114	7259010	1219661	Solenoid
115	7260362	7260362	Speaker
116	7259011	7259011	Switch - Tuner Return
117	7259012	7259012	Switch - Station Selector
119	7260006	7260006	Transformer - Output
120	7259375	7255881	Transformer - Power
121	7239124	8542	Vibrator
		MECHANICAL PARTS	
		Chassis	
123	7256742	7256742	Antenna Connector
	7236279	7236279	Socket - Octal Tube
	7259307	7259307	Socket - 9 Pin Miniature Tube
	7258073	7258073	Socket - 7 Pin Miniature Tube
	7239125	7239125	Socket - Vibrator
	1219747	1219747	Socket - Dial Light
		Tuner	
130	7259201	7259201	Core - Tuning
131	7259178	7259178	Core Guide Bar
132	187189	44	Dial Light
133	7260373	7260373	Escutcheon Assy.
134	7260262	7260262	Dial
135	7260125	7260125	Dial Backplate
	7259494	7259494	Retainer Spring - L. H.
	7259495	7259495	Retainer Spring - R. H.
136	7260357	7260357	Manual Drive Shaft
137	7259197	1219610	Motor Gear Train Assy.
138	7260309	7260309	Pointer Assembly
139	7260501	7260501	Pointer Backplate
140	7259100	6047	Spring Clip
141	7259055	7259055	Spring - Motor Power
142	7259207	7259207	Spring - Worm Anti-rattle
	1219751	1219751	Station Selector Bar Pkg.
	7256121	7256121	"C" Washer
143	7260223	7260223	Station Selector Bar and Shaft
144	7259122	7259122	Retainer Spring
145	7259111	7259111	Spring
	7259125	7259125	Switch Operating Ring
			Toggle Plate
146	7259164	7259164	Solenoid Plunger
147	7259026	7259026	Worm Gear and Bracket Assy.
		INSTALLATION PARTS	
	7260148	7260148	"A" Lead and Fuse Holder Assy.
	7259644	7259644	Condenser - Generator
	7259643	7259643	Condenser - Ignition
	7259646	6007	Distributor - Suppressor
	147685	147685	Fuse - 14 Amps.
	7260187	7260187	Knob - Control
	7260147	7260147	Lever - Tone and Sensitivity
	7260218	7260218	Trimplate - Sensitivity
	7260219	7260219	Trimplate - Tone

©John F. Rider

Compliments of www.nucow.com

MODEL 980899,
Buick

GENERAL

MOUNTING—All 1950 Buick Cars.

TUBES—Seven, Plus Rectifier.

SPEAKER—8″ Round, Permanent Magnet.

TUNING—Manual and Electronic.

ANTENNA TRIMMER COMPENSATION—For Antennas Between 0.000072 - 0.000088 Mfd.

TUNING RANGE—550 - 1600 KC.

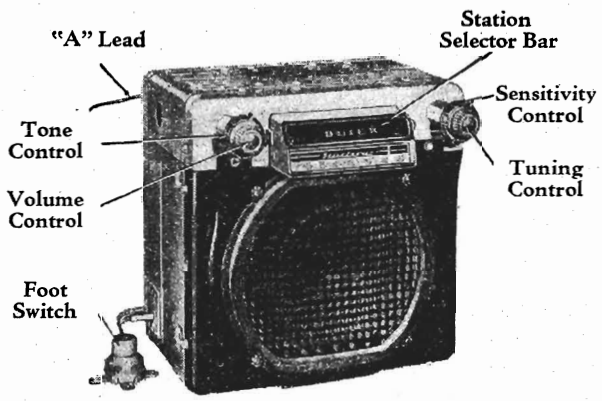

MODEL 980899

PUSH BUTTON SET-UP PROCEDURE

No push button set-up is necessary. However, the number of stations on which the tuner will stop can be controlled through use of the Sensitivity Control.

SIGNAL SEEKING TUNER ALIGNMENT PROCEDURE

NOTE: When aligning the signal seeker tuner type radio, be sure to use a vacuum tube voltmeter as indicated and be sure to follow the alignment sequence given—(Notice that the primary of the 2nd I. F. is aligned first.)

Output Meter Connection ..... VTVM from [2] to chassis (see parts layout
Generator Return ..... Receiver Chassis
Dummy Antenna ..... In series with generator
Volume Control ..... Maximum Volume
Tone Control ..... Treble
Generator Output ..... Not to exceed 2 volts at VTVM

Step	Dummy Antenna	Connect To	Signal Generator Frequency	Tune Receiver To	Adjust in Sequence For Max. Output
1	0.1 mfd	6SA7 Grid (Pin 8)	260 KC	*High Frequency Stop	A, B, C, D
2	0.000082 mfd	Antenna Connector	1615 KC	High Frequency Stop	**E, F, G
3	0.000082 mfd	Antenna Connector	600 KC	Signal Generator Signal	J, K
4	0.000082 mfd	Antenna Connector	1615 KC	Signal Generator Signal	F, G
5	0.000082 mfd	Antenna Connector	1000 KC	Signal Generator Signal	***L

*To tune to high frequency, put a 0.070″ feeler gauge (or bare #13 wire) in slot against the high frequency stop. Depress station selector bar and allow the planetary arm to run against the feeler gauge. Turn the radio off and then back on.

**Before making this adjustment, check the setting of oscillator core "H." The rear of the core should be $1\frac{25}{32}$″ from the mounting end of the coil form. This measurement is readily made by inserting a suitable plug in the mounting end of the coil form. The core adjustment is made from the mounting end of the coil form with an insulated screwdriver. (It will be necessary to steady the core guide bar while making these adjustments. This can be done by applying a downward pressure on the guide bar at the antenna coil end.) If this adjustment is necessary, first dissolve the glyptal seal on the core stud and be sure to re-seal after making the adjustment.

***"L" is the pointer adjustment screw on the end of the core guide bar—adjust so pointer reads 1000 KC.

With the radio installed and the antenna plugged in, adjust the antenna trimmer "G" for maximum volume with the radio tuned to a weak station near 1400 KC (see sticker on case.)

©John F. Rider

Compliments of www.nucow.com

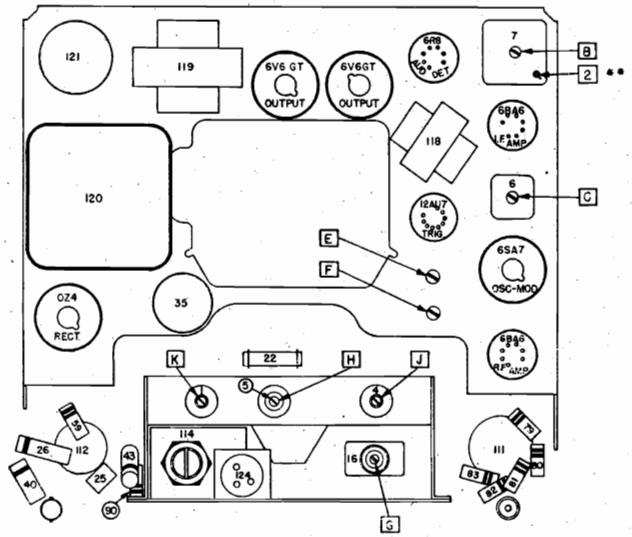

PARTS LAYOUT — TUBE VIEW

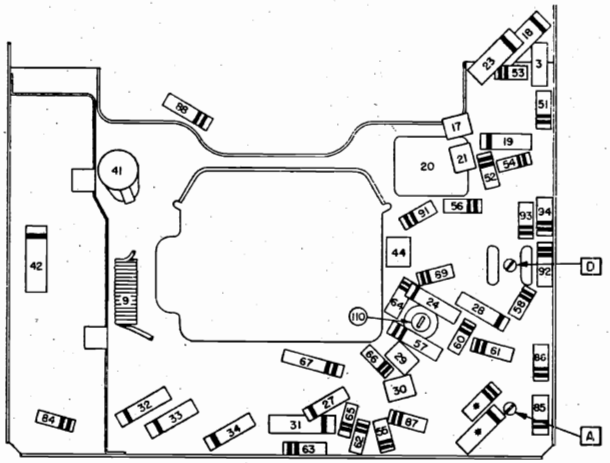

PARTS LAYOUT — CHASSIS VIEW

*The condenser and resistor are included in the 2nd IF Coil Assy.

**Connect VTVM between this point and ground for output indications during alignment procedure.

TUBE SOCKET VOLTAGE CHART

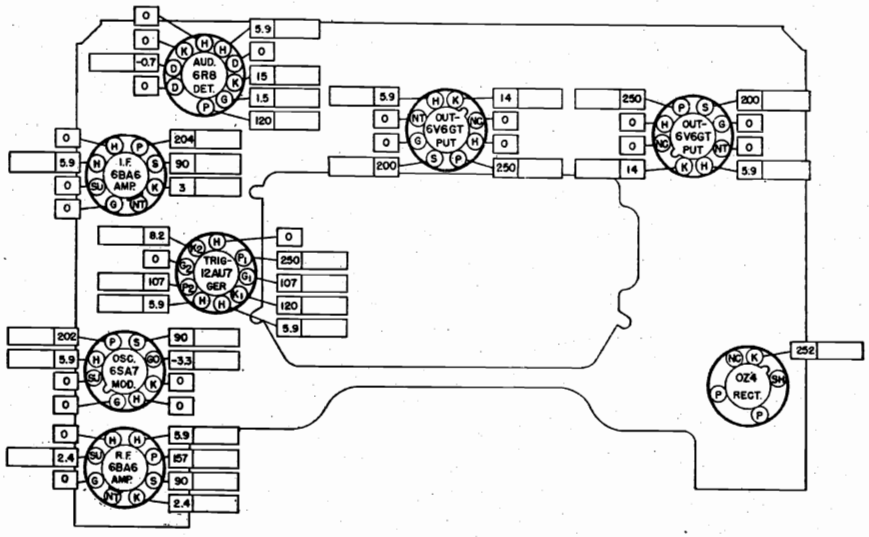

The tube socket voltages, as measured at the factory and under the conditions shown on the schematic diagram, are shown above. The blank spaces are provided so that the serviceman may fill in actual voltage readings as taken with his own equipment. A normal operating radio should be used for these measurements.

Voltmeter resistance .....Ohms Per Volt.

Readings taken with.....Volts at Spark Plate.

All voltages measured from socket terminals to chassis.

TUNER ADJUSTMENT PROCEDURE:

CATHODE DELAY ADJUSTOR (Illustration #110) (This adjustment should not be made unless it is necessary to replace the Delay Adjustor or the setting is definitely proven to be faulty).

1. Disconnect antenna and turn radio on.
2. Allow set to warm up.
3. Momentarily depress station selector bar.
4. Set voltage at K_2 of the 12AU7 trigger tube (Pin #8) to 8.0 volts by adjusting Illustration 110 while the tuner is seeking and with exactly 6.0 volts at the spark plate.

NOTE: For all other tuner adjustments, see Bulletin 6D-620.

©John F. Rider

Compliments of www.nucow.com

MODEL 980899,
Buick

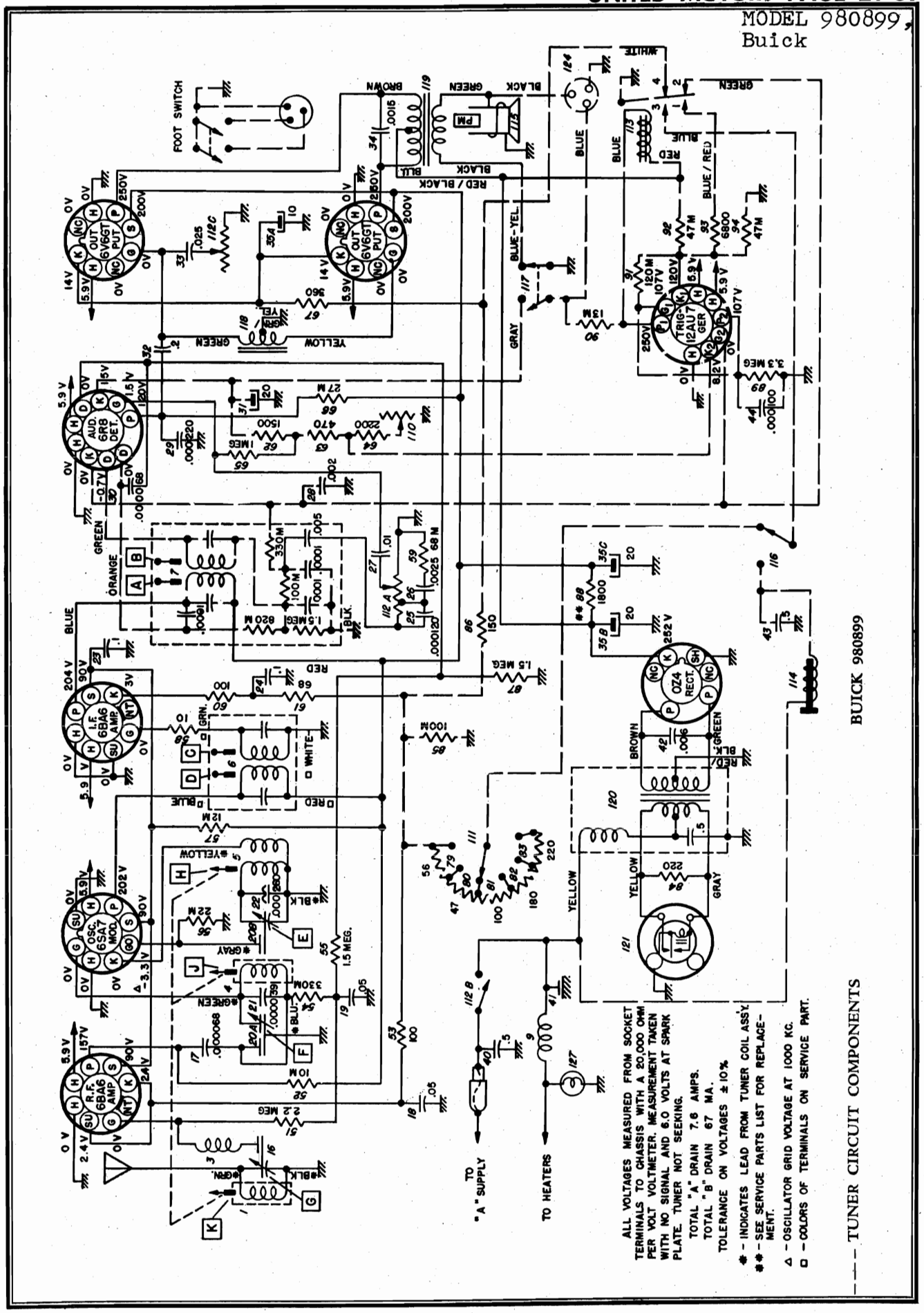

TUNER CIRCUIT COMPONENTS

©John F. Rider

Compliments of www.nucow.com

MODEL 980899,
Buick

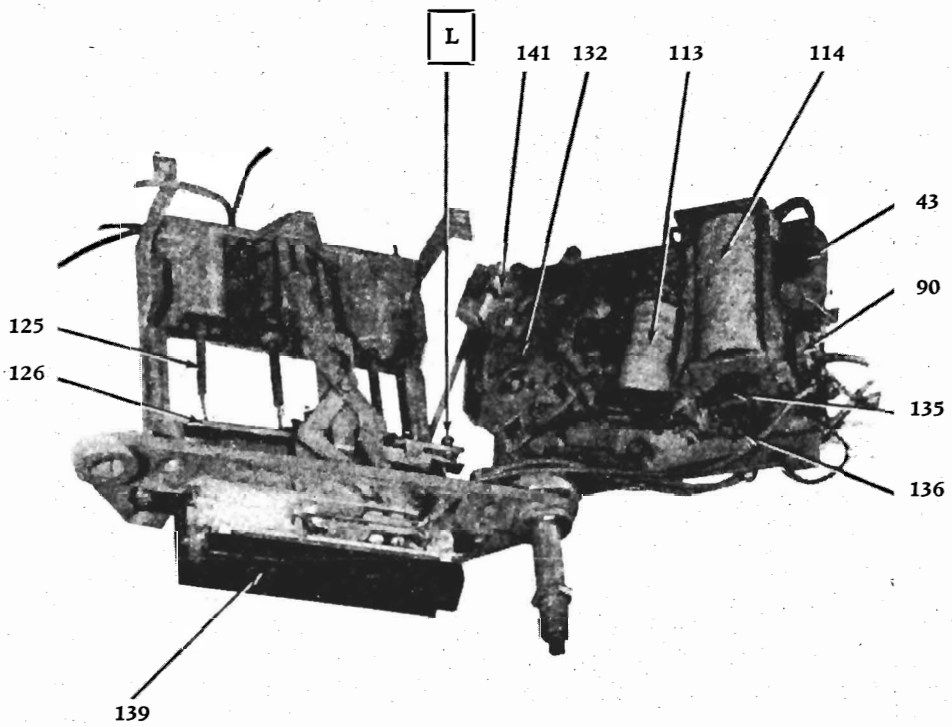

TUNER UNFOLDED

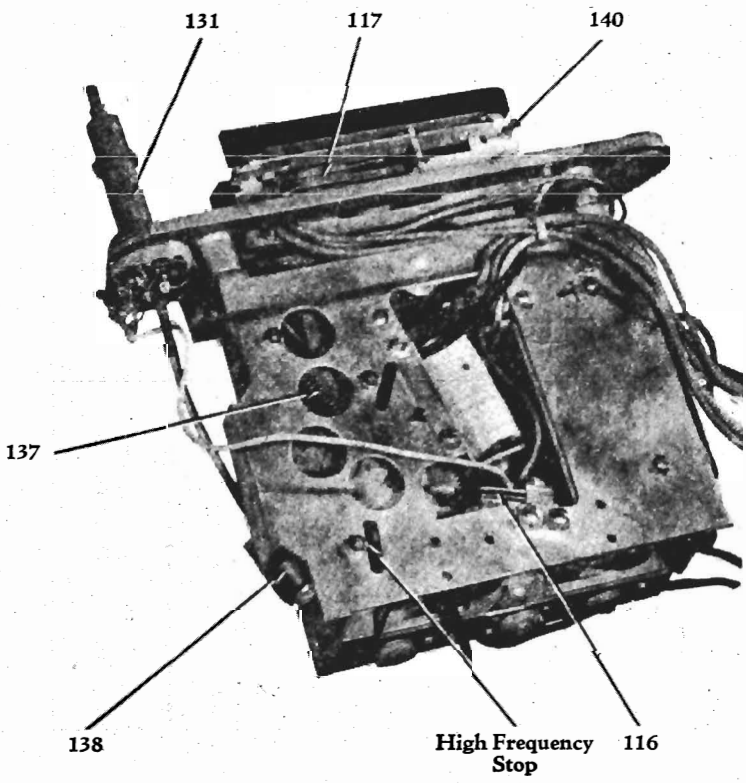

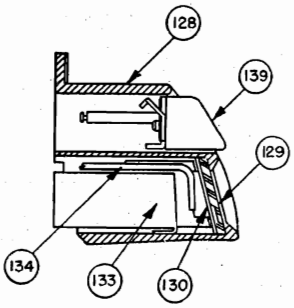

ESCUTCHEON
CROSS-SECTION

©John F. Rider

Compliments of www.nucow.com

MODEL 980899, Buick

SERVICE PARTS LIST

Illus. No.	Production Part No.	Service Part No.	Description
			ELECTRICAL PARTS
			Coils
1	7257979	7257979	Antenna
3	7240251	7240251	Antenna Spark Choke
4	7257979	7257979	R.F.
5	7259184	7259184	Oscillator
6	7258849	1219508	1st I.F.
7	7259350	1219602	2nd I.F.
9	7240690	1217846	Hash Choke
			Condensers
16	7259308	7259308	Antenna Trimmer
17	1219550	G 680	.000068 mfd Mica
18	7236842	E 503	.05 mfd 200 V Tubular
19	7236842	E-503	.05 mfd 200 V Tubular
20	7242454	7242454	Dual Trimmer
20A			RF Section
20B			Oscillator Section
21	7258221	G 390	.000039 mfd Ceramic
22	7257567	7257567	.000260 mfd Compensating
23	7238788	E 104	.1 mfd 400 V Tubular
24	7238789	E 104	.1 mfd 200 V Tubular
25	7240577	7240577	.000120 mfd Mica
26	7240578	7240578	.0025 mfd 400 V Tubular
27	7237957	E 103	.01 mfd 400 V Tubular
28	7237836	E 202	.002 mfd 600 V Tubular
29	7238792	G 221	.000220 mfd Mica
30	1219550	G 680	.000068 mfd Mica
31	1219660	1219660	20 mfd 50 V Electrolytic
32	7240579	E 204	.2 mfd 400 V Tubular
33	1211232	1211232	.025 mfd 400 V Tubular
34	7236134	7236134	.0015 mfd 800 V Tubular
35	7259128	7259128	Electrolytic
35A			10 mfd 100 V
35B			20 mfd 400 V
35C			20 mfd 400 V
40	7236621	E 504	.5 mfd 200 V Tubular
41	1217848	1217848	Chassis Plate Condenser
42	7240906	H 602	.006 mfd 1600 V Tubular
43	1219511	E 504	.5 mfd 100 V Tubular
44	7239184	G 101	.000100 mfd Mica
			Resistors
51	1211147	A 225	2.2 Megohms ½ W Insulated
52	1211085	B 103	10,000 Ohms 1 W Insulated
53	1213217	A 101	100 Ohms ½ W Insulated
54	7240732	A 334	330,000 Ohms ½ W Insulated
55	1211142	A 155	1.5 Megohms ½ W Insulated
56	1211192	A 223	22,000 Ohms ½ W Insulated
57	1212491	1212491	12,000 Ohms 2 W Insulated
58	1215107	A 100	10 Ohms ½ W Insulated
59	1213844	A 683	68,000 Ohms ½ W Insulated
60	1213217	A 101	100 Ohms ½ W Insulated
61	1215558	1215558	68 Ohms ½ W Insulated
62	1219488	1219488	1500 Ohms ½ W Insulated
63	1219487	1219487	470 Ohms ½ W Insulated
64	1214545	A 222	2200 Ohms ½ W Insulated
65	1213282	A 105	1 Megohm ½ W Insulated
66	7236080	B 273	27,000 Ohms 1 W Insulated
67	7234563	7234563	360 Ohms 1 W (Wire Wound)
79	1214540	1214540	56 Ohms ½ W Insulated
80	1213489	A 470	47 Ohms ½ W Insulated
81	1213217	A 101	100 Ohms ½ W Insulated
82	1215559	1215559	180 Ohms ½ W Insulated
83	7237835	A 221	220 Ohms ½ W Insulated
84	7237994	B 221	220 Ohms 1 W Insulated
85	1211118	A 104	100,000 Ohms ½ W Insulated
86	1213220	A 151	150 Ohms ½ W Insulated
87	1211142	A 155	1.5 Megohms ½ W Insulated
88	1214573	C272 / B562	1,800 Ohms 2 W Wire Wound (or replace with 2700 Ohms 2 W and 5600 Ohms 1 W in parallel)
89	1214564	A 335	3.3 Megohms ½ W Insulated
90	7231539	7231539	13,000 Ohms 1 W Insulated
91	1213271	1213271	120,000 Ohms ½ W Insulated
92	1216157	B 473	47,000 Ohms 1 W Insulated
93	1216154	1216154	6800 Ohms 1 W Insulated
94	1216157	B 473	47,000 Ohms 1 W Insulated

©John F. Rider

Compliments of www.nucow.com

MODEL 980899,
Buick

SERVICE PARTS LIST

Illus. No.	Production Part No.	Service Part No.	Description
		Tubes	
	1211924	5003	0Z4
	1213793	5241	6V6GT
	1219496	5541	6R8
	1217690	5252	6BA6
	1219485	5328	12AU7
	7237752	5222	6SA7
		Miscellaneous Electrical	
	7242034	7242034	"A" Lead Connector
112	7258683	7258683	Control - Volume - Tone and Switch
112A			Volume
112B			Tone
112C			Switch
111	7259311	7259311	Control - Sensitivity
110	7242204	7242204	Delay Adjustor
113	7259009	7259009	Relay
114	7259010	1219661	Solenoid
115	7259502	7259502	Speaker 8" PM
	7258903	7258903	Switch - Foot Switch Assy.
116	7259011	7259011	Switch - Tuner Return
117	7259012	7259012	Switch - Station Selector
118	7258941	7258941	Transformer - Input
119	7259336	7259336	Transformer - Output
120	7258889	6060	Transformer - Power
121	7239124	8542	Vibrator - Non-synchronous
		MECHANICAL PARTS	
		Chassis	
	7242035	7242035	Antenna Connector
124	7259392	7259392	Socket - Foot Switch
	7236279	7236279	Socket - Octal Tube
	7259307	7259307	Socket - 9 Pin Miniature
	7258073	7258073	Socket - 7 Pin Miniature
	7239125	7239125	Socket - Vibrator
		Tuner	
125	7259201	7259201	Core - Powdered Iron
126	7259178	7259178	Core Guide Bar
127	125588	55	Dial Light
128	7259347	7259347	Escutcheon Assy.
129	7259310	7259310	Dial
130	7256886	7256886	Dial Backplate
131	7259341	7259341	Manual Drive Assy.
132	1219610	1219610	Motor Gear Train Assy.
133	7259498	7259498	Pointer Backplate
134	1219093	1219093	Pointer Tip Pkg.
135	7259164	7259164	Solenoid Plunger
136	7259100	7259100	Spring Clip
137	7259055	7259055	Spring - Motor Power
138	7259207	7259207	Spring - Worm Anti-Rattle
	1219612	1219612	Station Selector Bar Pkg.
139	7259309	7259309	Station Selector Bar
			Toggle Plate
140	7259111	7259111	Spring (2)
			"C" Washer
	1219124	1219124	Push Bar Insert "B"
	1219125	1219125	Push Bar Insert "U"
	1219126	1219126	Push Bar Insert "I"
	1219127	1219127	Push Bar Insert "C"
	1219128	1219128	Push Bar Insert "K"
141	7259026	7259026	Worm and Bracket Assy.
		INSTALLATION PARTS	
	1321178	1321178	"A" Lead Assy.
	1336763	6030	Condenser - Generator
	1910147	6030	Condenser - Ignition
	120151	120151	Fuse - 15 Amp.
	1341337	1341337	Knob - Sensitivity
	1341536	1341536	Knob - Tone Control
	1341566	1341566	Knob - Tuning Control
	7258903	7258903	Switch - Foot Control
	1853686	1853686	Suppressor - Adapter
	1217820	1217820	Suppressor - Distributor

©John F. Rider

Compliments of www.nucow.com

MODELS 982543, 982579, Oldsmobile

SUBJECT: SERVICE INSTRUCTIONS—OLDSMOBILE 1950 MODELS 982543 AND 982579 DELUXE AUTO RADIO. (These models differ only in accessory parts, the receiver itself being identical in each case. The accessory parts supplied with Model 982543 are for use with 1950 Oldsmobile cars Models 76 and 88. The accessory parts supplied with Model 982579 are for use with 1950 Oldsmobile cars, Model 98).

GENERAL

MOUNTING..Model 982543 in 1950 Oldsmobile cars Models 76 and 88.
..Model 982579 in 1950 Oldsmobile cars Model 98.

TUBES..... Six, plus rectifier

SPEAKER.....
..6"x9" Elliptical Permanent Magnetic

TUNING.. Manual and 5 P.B. Mechanical

ANTENNA TRIMMER COMPENSATION..... For antennas between 0.000055 - 0.000090 Mfd.

TUNING RANGE..... 535 - 1610 KC.

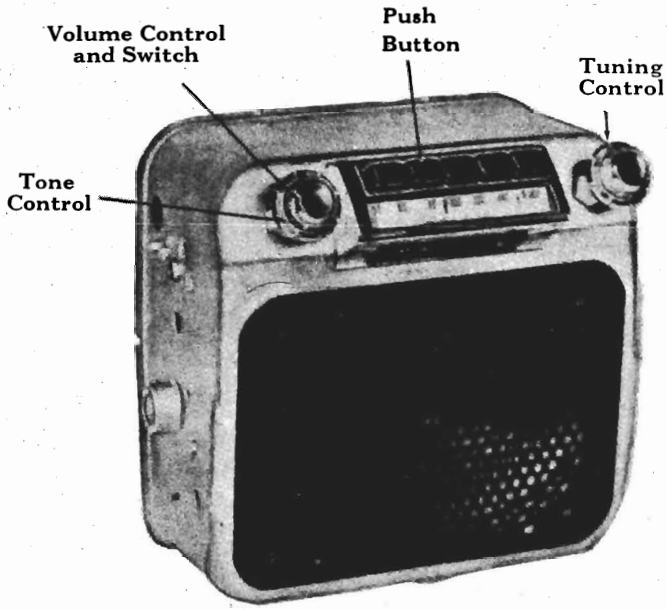

MODELS 982543 and 982579

PUSH BUTTON SET-UP

Pull push button to the left and then out. Tune in desired station manually. Push button all the way in.

ALIGNMENT PROCEDURE:

Output Meter Connection.....Across Voice Coil
Generator Return.....To Receiver Chassis
Dummy Antenna.....In Series With Generator
Volume Control Position.....Maximum Volume
Tone Control Position.....Treble
Generator Output.....Minimum for Readable Indication

Steps	Series Condenser or Dummy Antenna	Connect To	Signal Generator Frequency	Tune Receiver To	Adjust In Sequence For Max. Output
1	0.1 Mfd.	6SA7 Grid (Pin #8)	257.5 KC.	High Frequency Stop	A, B, C, D
2	0.00007 Mfd.	Antenna Connector	1610 KC.	High Frequency Stop	E, F, G

Low frequency alignment not required.

With the radio installed and the car antenna plugged in adjust the antenna trimmer "G" for maximum volume with the radio tuned to a weak station near 1400 KC.

©John F. Rider

Compliments of www.nucow.com

MODELS 982543,
982579, Oldsmobile

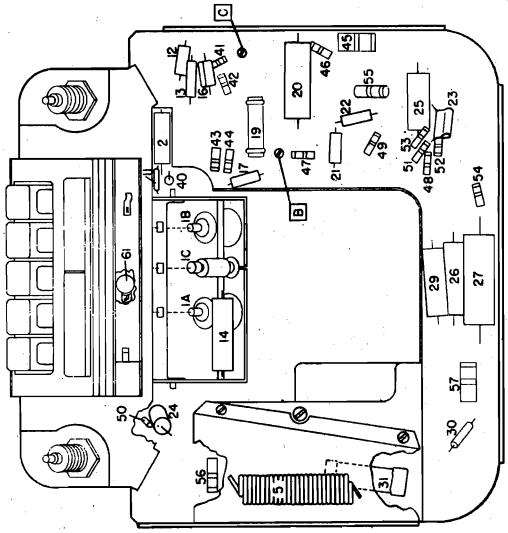

PARTS LAYOUT—CHASSIS VIEW

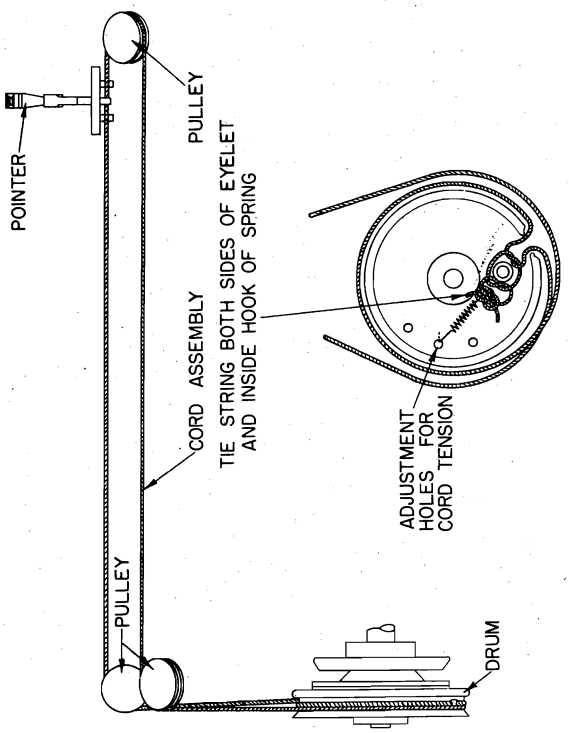

POINTER STRING HOOKUP

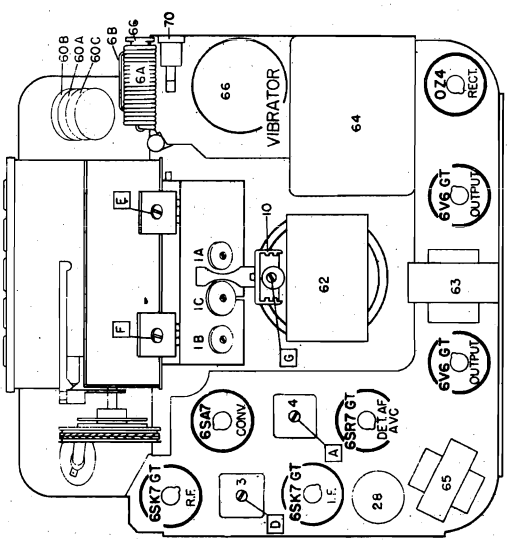

PARTS LAYOUT—TUBE VIEW

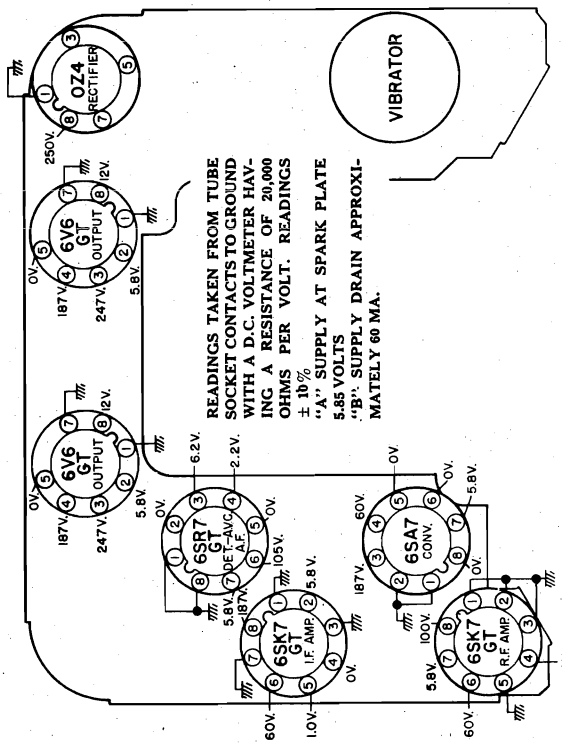

TUBE SOCKET VOLTAGE CHART

©John F. Rider

Compliments of www.nucow.com

MODELS 982543, 982579, Oldsmobile

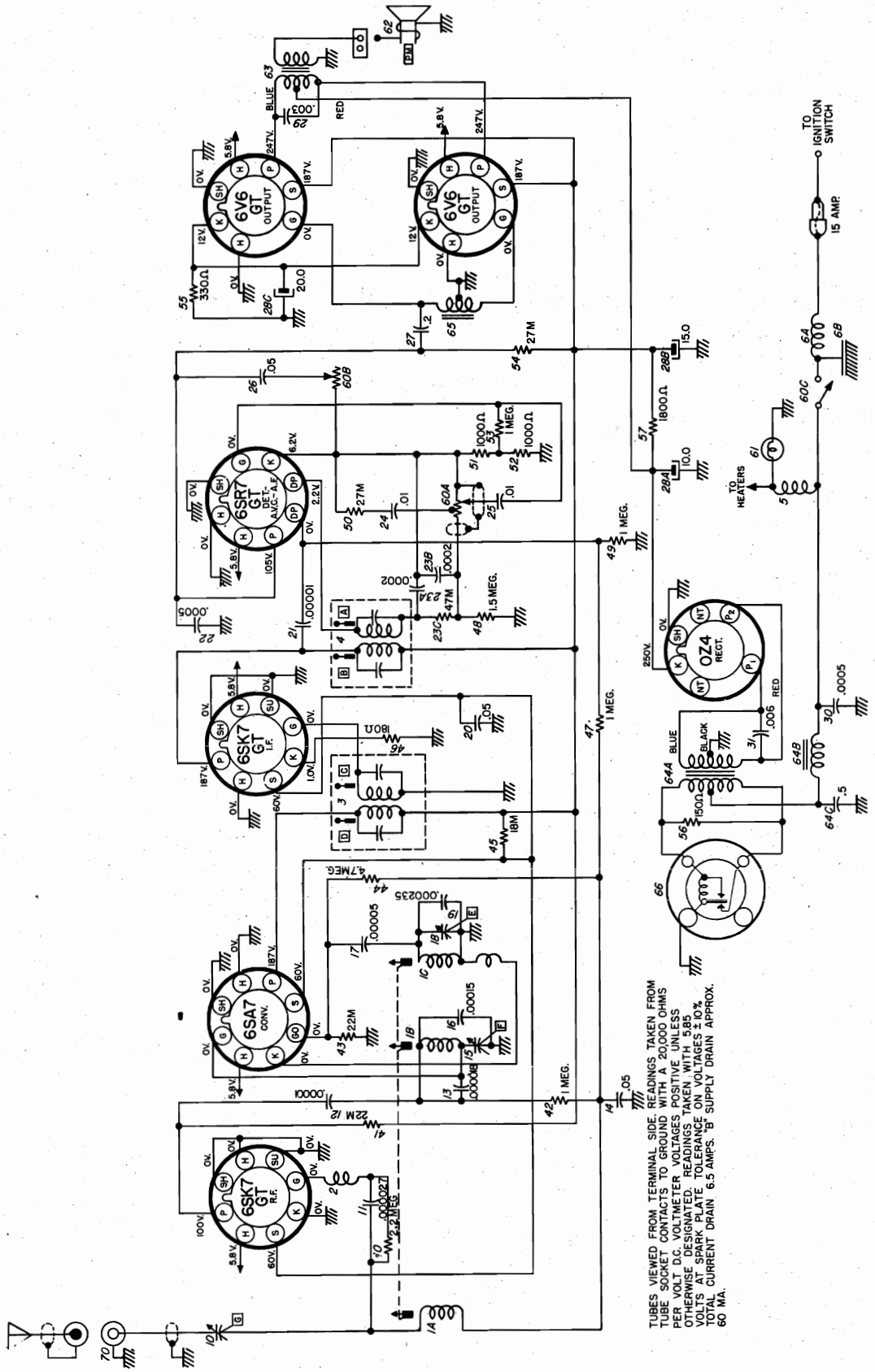

©John F. Rider

Compliments of www.nucow.com

MODELS 982543, 982579, Oldsmobile

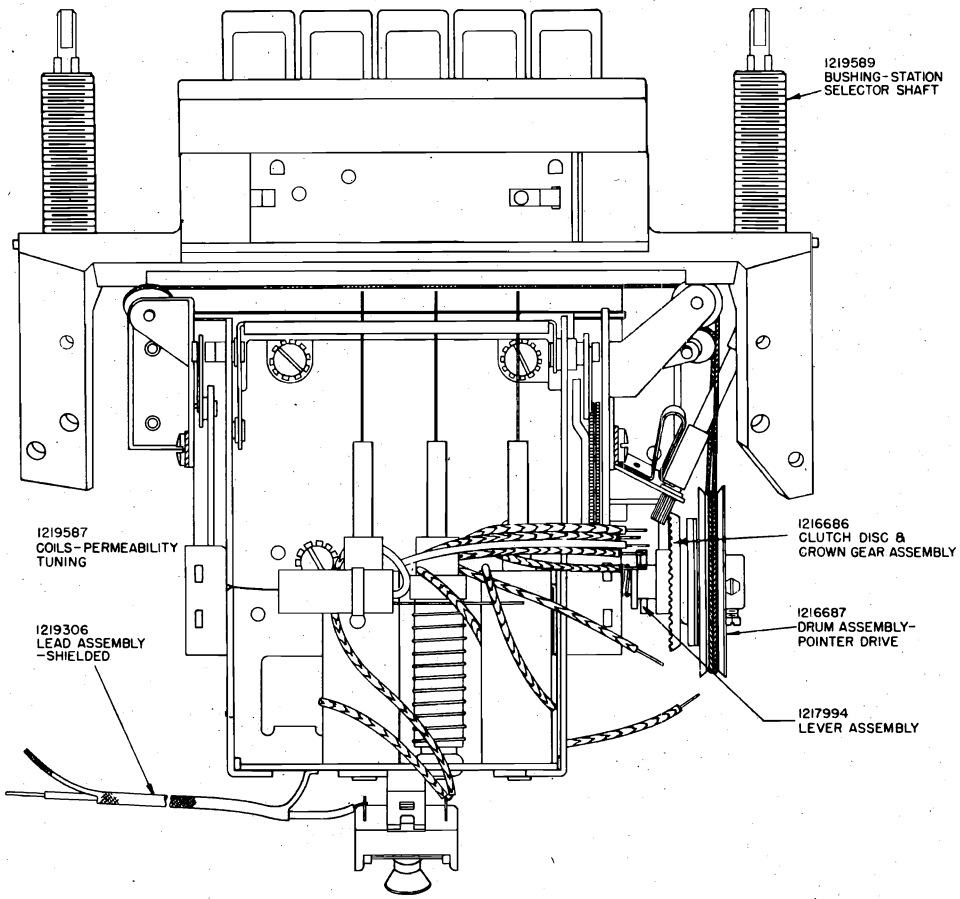

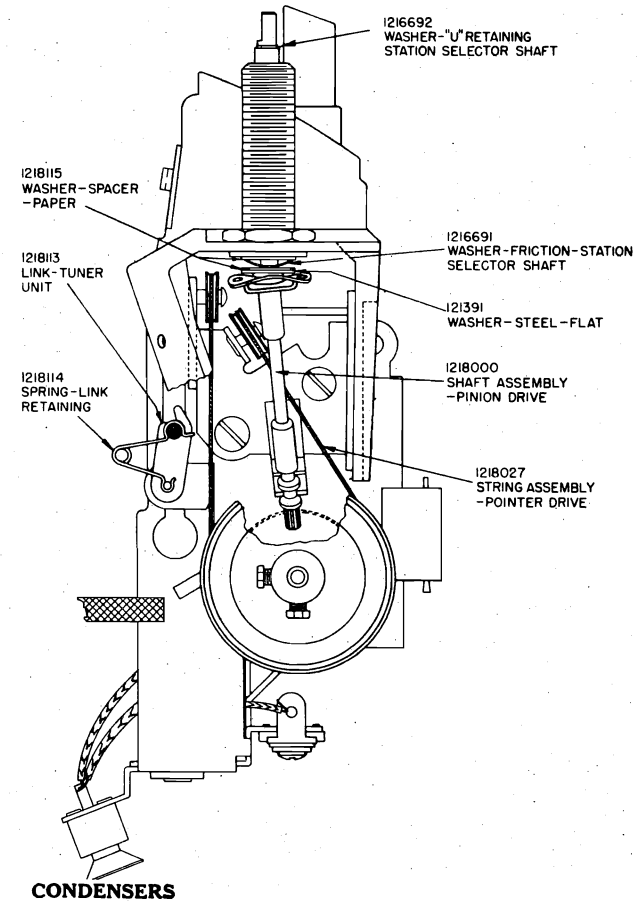

TUNER

Illus. No.	Service Part No.	Production Part No.	Description
			ELECTRICAL PARTS
			COILS
1		1219587	Coils—Permeability Tuning
1 A			Antenna Coil
1 B			R.F. Coil
1 C			Oscillator Coil
2		1214382	Antenna Choke
3		1219583	1st I.F. Assembly
4		1219584	2nd I.F. Assembly
5		1217996	Filament Choke
6		1219310	Spark Filter & "A" Connector Assembly
A			Spark Choke
B			Spark Plate

CONDENSERS

10		1219312	Antenna Trimmer
11		7256259	.000027 Mfd.—Molded
12	G 100	7234242	.00001 Mfd.—Molded
13		1217733	.000018 Mfd.—Molded
14	E 503	7230592	.05 Mfd.—100 V.—Tubular
15		1218046	R.F. Trimmer
16	G 151	7230893	.00015 Mfd.—Molded
17	G 470	1207625	.00005 Mfd.—Molded
18		1218043	Oscillator Trimmer
19		1219305	.000235 Mfd. Temperature Compensating
20	E 503	7230592	.05 Mfd.—200 V.—Tubular
21	G 100	7234242	.00001 Mfd.—Molded
22	G 471	7238879	.0005 Mfd.—Ceramic or Molded
23		1219563	Diode—Filter Unit
A			.0002 Mfd.
B			.0002 Mfd.
C			47,000 Ohm
24	E 103	7237957	.01 Mfd.—100 V.—Tubular
25	E 103	7237957	.01 Mfd.—100 V.—Tubular
26	E 503	7230592	.05 Mfd.—200 V.—Tubular

©John F. Rider

Compliments of www.nucow.com

MODELS 982543, 982579, Oldsmobile

Illus. No.	Service Part No.	Production Part No.	Description
27	E 204	1217876	.2 Mfd.—200 V.—Tubular
28		1218009	Electrolytic Condenser
A			10 Mfd.—350 V.
B			15 Mfd.—350 V.
C			20 Mfd.—25 V.
29		1219301	.003 Mfd.—800 V.—Tubular
30	G 471	7238879	.0005 Mfd.—Ceramic or Molded
31		1219591	.006 Mfd.—1600 V.—Tubular

RESISTORS

40	A 225	1214563	2.2 Megohm—1/2 W. Insulated
41	A 223	1214550	22,000 Ohm—1/2 W. Insulated
42	A 105	1213282	1 Megohm—1/2 W. Insulated
43	A 223	1214550	22,000 Ohm—1/2 W. Insulated
44	A 475	1214566	4.7 Megohm—1/2 W. Insulated
45	C 183	7239157	18,000 Ohm—2 W. Insulated
46	A 181	1215559	180 Ohm—1/2 W. Insulated
47	A 105	1213282	1 Megohm—1/2 W. Insulated
48	A 155	1213283	1.5 Megohm—1/2 W. Insulated
49	A 105	1213282	1 Megohm—1/2 W. Insulated
50	A 273	1214551	27,000 Ohm—1/2 W. Insulated
51	A 102	1213235	1000 Ohm—1/2 W. Insulated
52	A 102	1213235	1000 Ohm—1/2 W. Insulated
53	A 105	1213282	1 Megohm—1/2 W. Insulated
54	A 273	1214551	27,000 Ohm—1/2 W. Insulated
55	B 331	7233773	330 Ohm—1 W. Insulated
56	B 151	1211005	150 Ohm—1 W. Insulated
57	C 182	1214573	1800 Ohm—2 W. Insulated

TUNER PARTS

1219589	Bushing—Station Selector Shaft
1219597	Background Assembly
1219588	Dial Glass—Calibrated
1218030	Pointer & Slide Assembly
1218027	String Assembly—Pointer Drive
1219595	Spring & Sleeve Assembly—Core Lock
1219596	Plate & Socket Assembly—Dial Lamp
1219309	Tuner Unit Assembly—Mechanical portion only (includes Push Buttons, Clutch Disc, and crown gear assembly)
1216687	Drum Assembly—Pointer Drive
1216686	Clutch Disc & Crown Gear Assembly
1214876	Spring—Clutch Compression
1217999	Lever Actuating Plate Assembly
1217994	Lever Assembly
1218113	Link—Tuner Unit
1218114	Spring—Link Retaining
1217992	Screw—10-32 Special
1216692	Washer—"U" Retaining—Station Selector Shaft
1216691	Washer—Friction—Station Selector Shaft
1218115	Washer—Spacing—Paper

TUBES

5230	1214292	6SK7GT—R.F. Amplifier
5222	7237752	6SA7—Oscillator—Translator
5230	1214292	6SK7GT—I.F. Amplifier
5233	1218149	6SR7GT—Detector—AVC—1st Audio
5241	1213793	6V6GT—Audio Output
5241	1213793	6V6GT—Audio Output
5003	1211924	OZ4—Rectifier

MISCELLANEOUS ELECTRICAL PARTS

60		1219582	Control—Volume, Tone & Switch
60A			Volume Control
60B			Tone Control
60C			Switch
61		187189	Lamp—Dial (Mazda #44)
62		1219291	Speaker—6" x 9" Elliptical Permanent Magnet
63		1219314	Transformer—Output
64		1219316	Power Transformer & Filter Assembly
64A			Transformer—Power
64B			Hash Choke
64C			Condenser—.5 Mfd.—100 V.
65		1219315	Transformer—Audio Input.
66	8542	1218006	Vibrator

©John F. Rider

Compliments of www.nucow.com

MODELS 982543,
982579, Oldsmobile

Service Part No.	Production Part No.	Description
		MECHANICAL PARTS
		CHASSIS
70	1219311	Antenna Connector Assembly
	7236279	Socket—Tube—8 Prong—Octal
	1216041	Socket—Vibrator
	1219586	Clip—IF Mounting
	1219585	Cover Assembly—Case Back
		INSTALLATION PARTS MODEL 982543
	414997	Washer—Flat 33/64 I.D.
	7255287	Nut—1/2—28 Hex.
	7258813	Knob—Tone and Dummy
	7257400	Washer—Wave—3/16 I.D. (Anti-Rattle) Tuning and Volume Control
	7259663	Knob—Tuning and Volume Control Includes Set Screw
	7256654	Bracket—Receiver Mounting
	554519	Bracket—Side Mounting
	554690	Bolt—1/4-20x3/8 Truss Head
	121797	Bolt—1/4-20x3/8 Hex. Head
	120706	Bolt—1/4-20x1/2 Hex. Head
	120392	Washer—Flat—17/64 I.D. 5/8 O.D.
	103319	Washer—Lock—1/4 (Split)
	120423	Washer—Lock—1/4 (Internal-Tooth)
	7256717	Spacer—Instrument panel to gasket
	554691	"A" Lead Connector and Filter Condenser Assembly
	120151	Fuse—15 Amp. 25 V.
	1912757	Condenser—Ignition Coil—0.3 Mfd.
	or	
	555437	Condenser—Ignition Coil—0.3 Mfd.
	1911095	Condenser—Generator—0.3 Mfd.
6030	1912900	Condenser—Voltage Regulator—0.5 Mfd.
	or	
	557531	Condenser—Voltage Regulator—0.5 Mfd.
	7257239	Distributor—Suppressor—15,000 Ohms
	414237	Insulating Elbow
	415823	Static Collector (Front Wheel)
	555348	Clip—Hood Grounding
	164349	Screw—8-32x1/4 Phillips Head Self-Tapping
	7256684	Gasket—Speaker Baffle
	7259626	Panel—Radio Control
		INSTALLATION PARTS MODEL 982579
	414997	Washer—Flat—33/64 I.D.
	7255287	Nut—1/2-28 Hex.
	7258813	Knob—Tone and Dummy
	7257400	Washer—Wave—3/16 I.D. (Anti-Rattle) Tuning and Colume Control
	7259663	Knob—Tuning and Volume Control Includes Set Screw
	120706	Bolt—1/4-20x1/2 Hex. Head
	103319	Washer—Lock—1/4 (Split)
	554845	Washer—Flat
	554691	"A" Lead & Filter Condenser Assembly
	120151	Fuse—15 Amp. 25 V.
	1912757	Condenser—Ignition Coil—0.3 Mfd.
	or	
	555437	Condenser—Ignition Coil—0.3 Mfd.
	1911095	Condenser—Generator—0.3 Mfd.
6030	1912900	Condenser—Voltage Regulator—0.5 Mfd.
	or	
	557531	Condenser—Voltage Regulator—0.5 Mfd.
	7257239	Distributor Suppressor—15,000 Ohms
	414237	Insulating Elbow
	415823	Static Collector (Front Wheel)
	555348	Clip—Hood Grounding
	164349	Screw #8-32x1/4 Phillips Head Self-Tapping
	7258815	Panel—Radio Control
	558956	Gasket—Speaker Baffle

©John F. Rider

Compliments of www.nucow.com

MODELS 982544, 982573, Oldsmobile

GENERAL

MOUNTING—982544 - All 1950 - 76 & 88 Series Oldsmobile Cars. 982573 - All 1950 - 98 Series Oldsmobile Cars.

TUBES—Six, Plus Rectifier.

SPEAKER—6"x 9" Elliptical Permanent Magnet.

TUNING—Manual and 5 P. B. Mechanical.

ANTENNA TRIMMER COMPENSATION—For Antennas Between 0.000050 — 0.000070 Mfd.

TUNING RANGE—540 - 1600 KC.

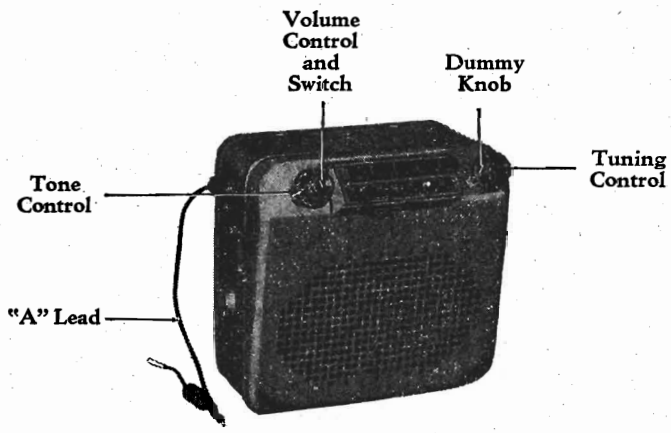

MODELS 982544 982573

PUSHBUTTON SET-UP

Pull pushbutton to the left and out. Tune in desired station manually. Push button all the way in.

ALIGNMENT PROCEDURE:

Output Meter Connection ..... Across Voice Coil
Generator Return ..... To Receiver Chassis
Dummy Antenna ..... In Series With Generator
Volume Control Position ..... Maximum Volume
Tone Control Position ..... Treble
Generator Output ..... Minimum for Readable Indication

Steps	Series Condenser or Dummy Antenna	Connect To	Signal Generator Frequency	Tune Receiver To	Adjust in Sequence For Max. Output
1	0.1 Mfd.	6SA7 Grid (Pin #8)	260 KC	High Frequency Stop	A, B, C, D
2	0.000068 Mfd.	Antenna Connector	1615 KC	High Frequency Stop	*E, F, G
3	0.000068 Mfd.	Antenna Connector	1400 KC	Signal Generator Signal	J, K
4	0.000068 Mfd.	Antenna Connector	1615 KC	High Frequency Stop	F, G
5	0.000068 Mfd.	Antenna Connector	1000 KC	Signal Generator Signal	**L

*Before making this adjustment check the mechanical setting of the oscillator core "H." The slotted end of core should be $1\frac{25}{32}$" from the mounting end of the coil form. (This measurement is readily made by inserting a suitable plug in the mounting end of the coil form.) If adjustment is necessary, first dissolve the glyptal seal on the studs. Core adjustments should be made with an insulated screwdriver and core studs should be re-sealed in place with glyptal or household cement after alignment.

**"L" is the pointer adjustment screw which is on the pointer connecting link (see tuner drawing) and should be adjusted so the pointer reads 1000 KC. (On first "0" of "100.")

With the radio installed and the car antenna plugged in adjust the antenna trimmer "G" for maximum volume with the radio tuned to a weak station near 1400 KC. (See sticker on case.)

©John F. Rider

Compliments of www.nucow.com

MODELS 982544,
982573, Oldsmobile

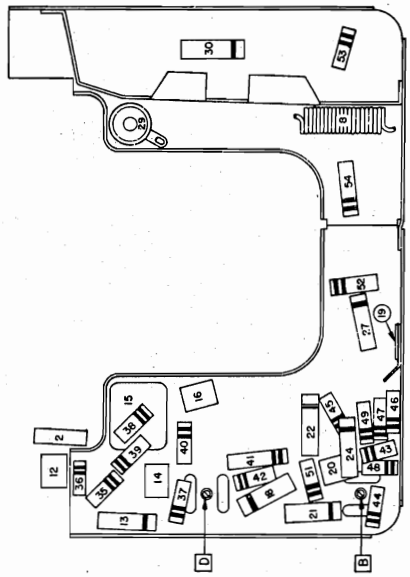

PARTS LAYOUT — CHASSIS VIEW

VOLTMETER RESISTANCE ..... OHMS PER VOLT. READING TAKEN WITH ..... VOLTS AT SPARK PLATE. THE VOLTAGES ARE MEASURED FROM TUBE SOCKET TERMINALS TO CHASSIS AND ARE POSITIVE UNLESS MARKED OTHERWISE.

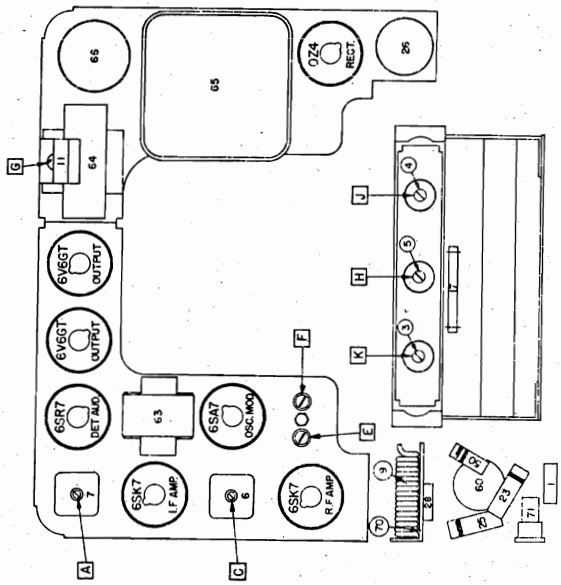

PARTS LAYOUT — TUBE VIEW

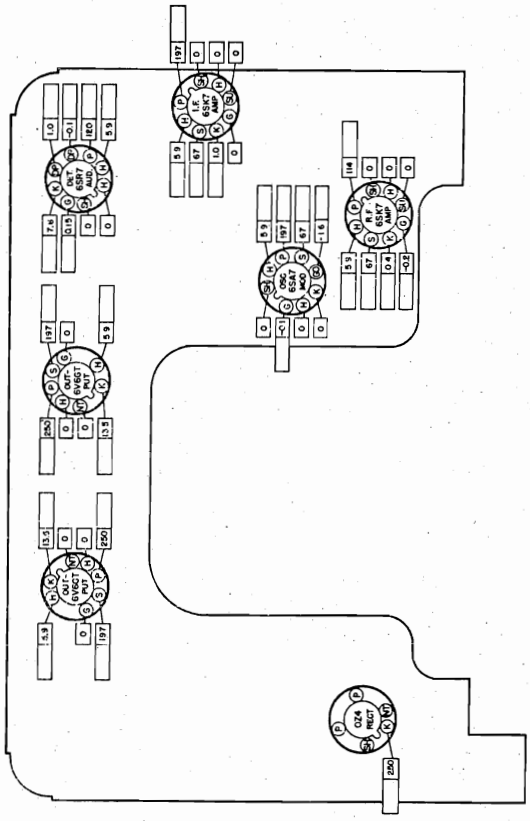

TUBE SOCKET VOLTAGE CHART

The tube socket voltages as measured at the factory and under the conditions shown on the schematic diagram on Page 3 are shown here. The blank spaces are provided so the serviceman may fill in the actual readings as taken with his own equipment. A normal operating radio should be used for these measurements.

©John F. Rider

Compliments of www.nucow.com

MODELS 982544,
982573, Oldsmobile

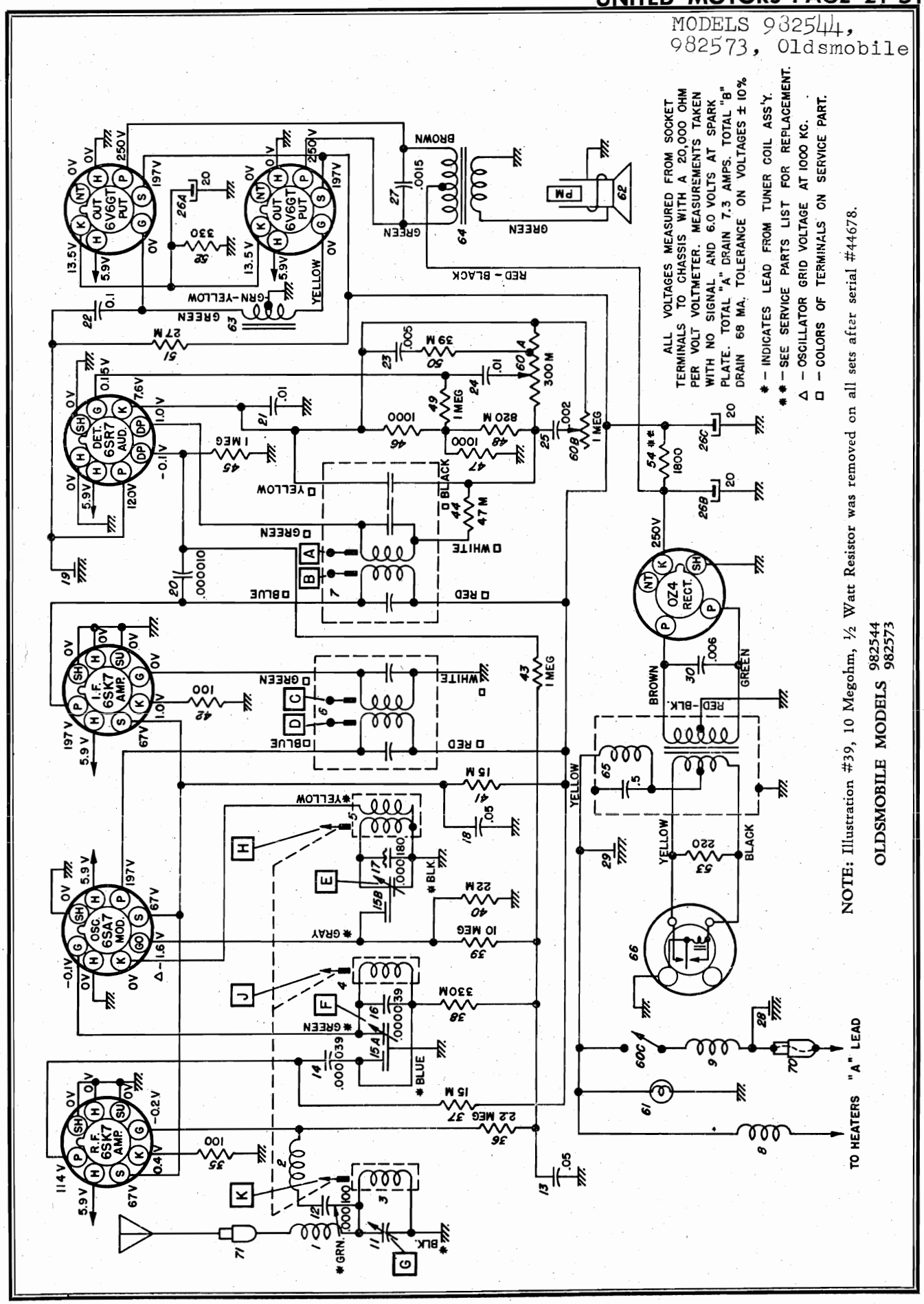

NOTE: Illustration #39, 10 Megohm, ½ Watt Resistor was removed on all sets after serial #44678.

OLDSMOBILE MODELS 982544
982573

©John F. Rider

Compliments of www.nucow.com

MODELS 982544,
982573, Oldsmobile

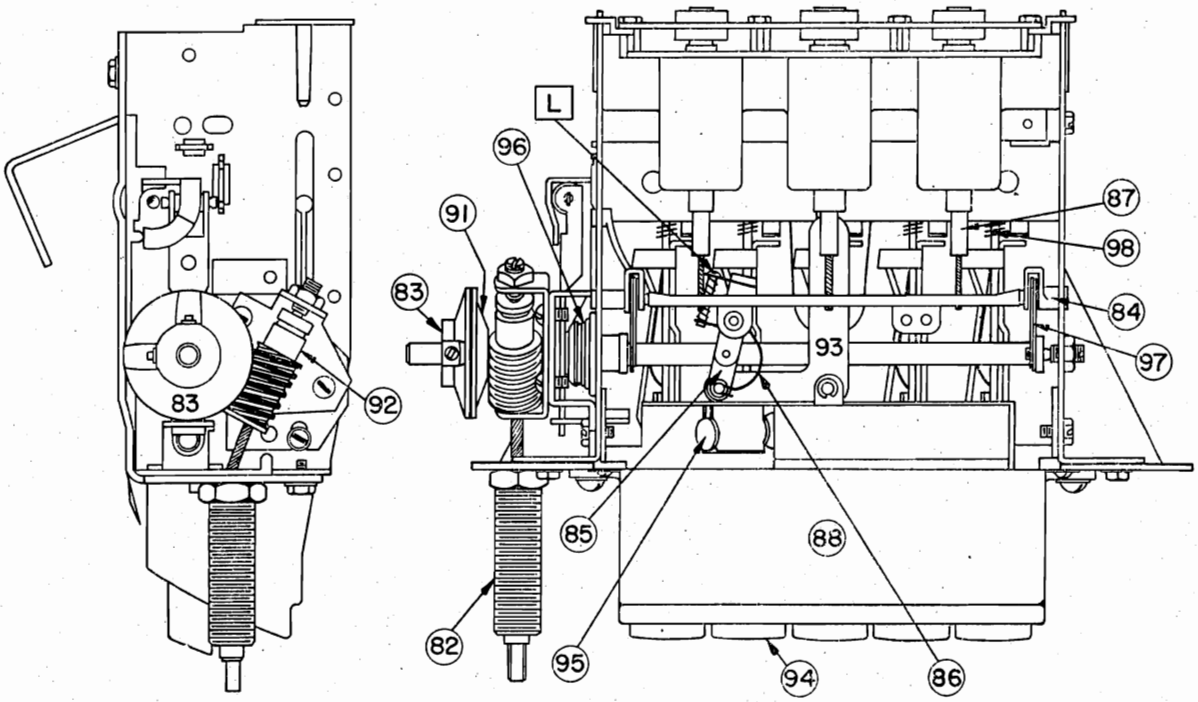

TUNER

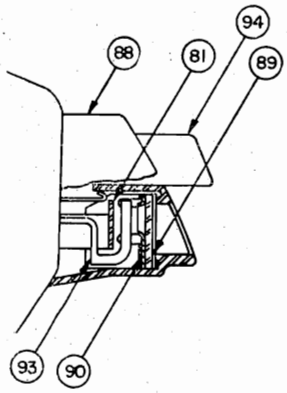

ESCUTCHEON CROSS SECTION

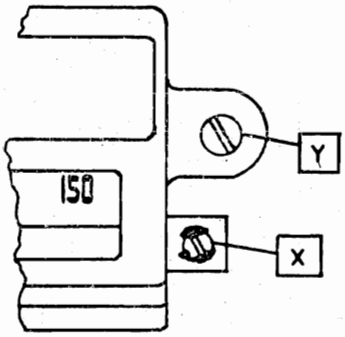

ESCUTCHEON MOUNTING

SPECIAL INSTRUCTIONS

Unless special precautions are taken in removing the dial escutcheon, there is a possibility that the dial pointer tip will be broken. Therefore, in removal of the escutcheon the ollowing procedure is recommended:

1. Loosen, but do not remove, the two screws holding the pointer back plate ("X" in Escutcheon Mounting Drawing Above) and loosen the shellac so that the back plate is free to move.
2. Remove the escutcheon mounting screws "Y" (see Escutcheon Mounting).
3. Carefully lift off the escutcheon (DO NOT FORCE). If the dial backplate is free to move slightly downward the escutcheon will come off easily.

The same caution should be exercised when replacing the escutcheon.

©John F. Rider

Compliments of www.nucow.com

MODELS 982544, 982573, Oldsmobile

SERVICE PARTS LIST

Illus. No.	Production Part No.	Service Part No.	Description
			ELECTRICAL PARTS
			Coils
1	7255738	7255738	Antenna Series Choke
2	7240251	7240251	Antenna Spark Choke
3	7258914	7258914	Antenna
4	7258914	7258914	R.F.
5	7259687	7259687	Oscillator
6	1219508	1219508	1st I.F.
7	1219509	1219509	2nd I.F.
8	1217846	1217846	Hash Choke
9	7258434	7258434	Spark Choke
			Condensers
11	7258160	7258160	Antenna Trimmer
12	1210275	G 101	.000100 mfd. Mica
13	7236842	E 503	.05 mfd. 200 V Tubular
14	7258221	G 390	.000039 mfd. Mica
15	7242454	7242454	Dual Trimmer
15 A			R.F. Section
15 B			Oscillator Section
16	7258221	G 390	.000039 mfd. Mica
17	7257424	7257424	.000180 mfd. Compensating
18	7230892	E 503	.05 mfd. 400 V Tubular
19	1217848	1217848	Chassis Plate Cond.
20	1215189	G 100	.000010 mfd. Mica
21	7237870	E 103	.01 mfd. 400 V Tubular
22	1219495	E 104	.1 mfd. 400 V Tubular
23	7232956	E 502	.005 mfd. 600 V Tubular
24	7238881	E 103	.01 mfd. 400 V Tubular
25	7237836	E 202	.002 mfd. 600 V Tubular
26	7240724	M 908	Electrolytic
26 A			20 mfd. 25 V
26 B			20 mfd. 400 V
26 C			20 mfd. 400 V
27	7236134	7236134	.0015 mfd. 800 V Tubular
28	1212278	1212278	Spark Plate Condenser (included in 7258434)
29	1217848	1217848	Chassis Plate Condenser
30	7240906	H 602	.006 mfd. 1600 V Tubular
			Resistors
35	1213217	A 101	100 ohms ½ W Insulated
36	1211147	A 225	2.2 megohms ½ W Insulated
37	7237595	B 153	15,000 ohms 1 W Insulated
38	7240732	A 334	330,000 ohms ½ W Insulated
*39	1215548	A 106	10 megohms ½ W Insulated
40	1211192	A 223	22,000 ohms ½ W Insulated
41	7233653	C 153	15,000 ohms 2 W Insulated
42	1213217	A 101	100 ohms ½ W Insulated
43	7238873	A 105	1 megohm ½ W Insulated
44	7240731	A 473	47,000 ohms ½ W Insulated
45	7238873	A 105	1 megohm ½ W Insulated
46	1213235	A 102	1,000 ohms ½ W Insulated
47	1213235	A 102	1,000 ohms ½ W Insulated
48	1214561	1214561	820,000 ohms ½ W Insulated
49	7238873	A 105	1 megohm ½ W Insulated
50	1217436	A 393	39,000 ohms ½ W Insulated
51	7236080	B 273	27,000 ohms 1 W Insulated
52	7233773	B 331	330 ohms 1 W Insulated
53	7237994	B 221	220 ohms 1 W Insulated
54	1214573	C 272 / B 562	1800 ohms 2 W Wire Wound (or replace with 2700 ohm 2 W and 5600 ohm 1 W in parallel)

*This Resistor was removed on all sets above serial #44678

©John F. Rider

Compliments of www.nucow.com

MODELS 982544,
982573, Oldsmobile

SERVICE PARTS LIST (Cont.)

Illus. No.	Production Part No.	Service Part No.	Description
			Tubes
	1218107	5233	6SR7
	1213793	5241	6V6GT
	7237751	5229	6SK7
	7237752	5222	6SA7
	1211924	5003	0Z4
			Miscellaneous Electrical
60	7259447	7259447	Control - Volume, Tone and Switch
60 A			Volume Control
60 B			Tone Control
60 C			Switch
61	187189	44	Lamp - Dial Light
62	7258146	7258146	Speaker - 6 x 9 P.M.
63	7258941	7258941	Transformer - Input
64	7259419	7259419	Transformer - Output
65	7255881	7255881	Transformer - Power
66	7239124	8542	Vibrator - Non-synchronous
			MECHANICAL PARTS
			Chassis
70	7258434	7258434	Connector "A" Lead
71	7256742	7256742	Connector - Antenna
	7236279	7236279	Socket - Octal Tube
	7239125	7239125	Socket - Vibrator
			Tuner
81	7256688	7256688	Backplate - Pointer
	147481	147481	Ball Bearing Pkg. (12)
82	7259443	7259443	Bushing and Manual Drive Shaft
83	7258072	7258072	Clutch Disc - Driven
84	7258211	7258211	Core Guide Bar - Parallel
85	7256271	7256271	Pointer Connecting Link
86	7255992	7255992	Spring - Pointer Connecting Link
87	7258468	7258468	Core - Powdered Iron
88	7259429	7259429	Escutcheon Assy.
89	7259430	7259430	Dial
90	7259496	7259496	Dial Backplate
91	7256495	7256495	Gear and Bushing - Clutch
92	7256705	7256705	Gear and Bracket - Worm
93	7257898	7257898	Pointer Assy.
	1219174	1219174	Pointer Tip Pkg.
94	1219173	1219173	Push Button and Slide Assy.
95	1217820	1217820	Socket - Dial Light
96	7258756	7258756	Spring - Clutch
97	7257415	7257415	Spring - Core Bar Connecting Link
98	7255984	7255984	Spring - Slide Return
			INSTALLATION PARTS
	554691	554691	"A" Lead, Condenser, and Fuse Connector, Male
		6016	Condenser - "A" Lead
	1911095	6030	Condenser - Generator
	1912757	6030	Condenser - Ignition Coil
	1912900	6030	Condenser - Voltage Regulator
	120151	120151	Fuse - 15 Amps
	555348	555348	Hook Ground Clip
	7259663	7259663	Knob Control
	7258813	7258813	Knob - Tone Control and Dummy
	7240138	6013	Static Collector
	7257239	7257239	Suppressor - Distributor
	414237	414237	Suppressor - Insulator
	7258815	7258815	Trim Plate (98 series)
	7259626	7259626	Trim Plate (76 and 88 series)

©John F. Rider

Compliments of www.nucow.com

MODELS 982582, 982583, Oldsmobile

GENERAL

MOUNTING—982582 - All 1950 - 76 & 88 Series Oldsmobile Cars.
982583 - All 1950 - 98 Series Oldsmobile Cars.

TUBES—Seven, Plus Rectifier.

SPEAKER—6" x 9" Elliptical Permanent Magnet.

TUNING—Manual and Electronic.

ANTENNA TRIMMER COMPENSATION—For Antennas Between 0.000050 - 0.000070 Mfd.

TUNING RANGE—540 - 1600 KC.

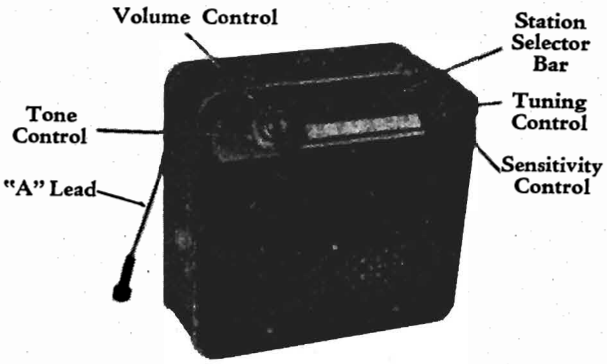

MODELS 982582 982583

PUSHBUTTON SET-UP

No Pushbutton Set-up is required. However, the number of stations on which the tuner will stop can be regulated by use of the Sensitivity Control.

SIGNAL SEEKING TUNER ALIGNMENT PROCEDURE:

NOTE: When aligning the signal seeker tuner type radio, be sure to use a vacuum tube voltmeter as indicated and be sure to follow the alignment sequence given—(Notice that the primary of the 2nd I.F. is aligned first.)

Output Meter Connection ..... VTVM From [2] To Chassis (see parts layout page 2)
Generator Return ..... Receiver Chassis
Dummy Antenna ..... In Series With Generator
Volume Control ..... Maximum Volume
Tone Control ..... Treble
Generator Output ..... Not to Exceed 2 Volts at VTVM

Step	Dummy Antenna	Connect To	Signal Generator Frequency	Tune Receiver To	Adjust in Sequence For Max. Output
1	0.1 mfd	6SA7 Grid (Pin 8)	260 KC	*High Frequency Stop	A, B, C, D
2	0.000068 mfd	Antenna Connector	1615 KC	High Frequency Stop	**E, F, G
3	0.000068 mfd	Antenna Connector	600 KC	Signal Generator Signal	J, K
4	0.000068 mfd	Antenna Connector	1615 KC	Signal Generator Signal	F, G
5	0.000068 mfd	Antenna Connector	1000 KC	Signal Generator Signal	***L

*To tune to high frequency, put a 0.070" feeler gauge (or bare #13 wire) in slot against the high frequency stop. (See tuner pictures). Depress station selector bar and allow the planetary arm to run against the feeler gauge. Turn the radio off and then on.

**Before making this adjustment, check the setting of oscillator core "H." The rear of the core should be $1\frac{25}{32}$" from the mounting end of the coil form. This measurement is readily made by inserting a suitable plug in the mounting end of the coil form. The core adjustment is made from the mounting end of the coil form with an insulated screwdriver. (It will be necessary to steady the core guide bar by applying a downward pressure at the antenna core end of the bar while making these adjustments.) If this adjustment is necessary, first dissolve the glyptal seal on the core stud and be sure to re-seal after making the adjustment.

***"L" is the pointer adjustment screw on the end of the core guide bar—adjust so pointer reads 1000 KC.

With the radio installed and the antenna plugged in, adjust the antenna trimmer "C" for maximum volume with the radio tuned to a weak station near 1400 KC (see sticker on case).

©John F. Rider

Compliments of www.nucow.com

MODELS 982582, 982583, Oldsmobile

TUBE SOCKET VOLTAGE CHART

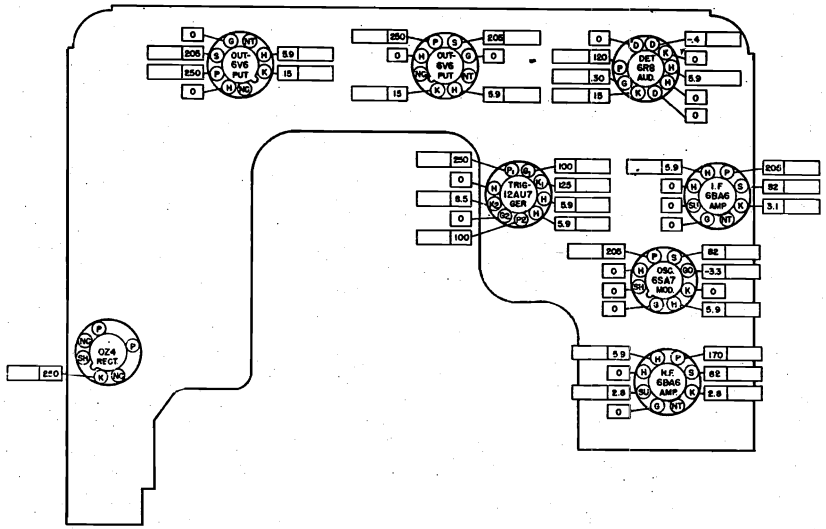

The tube socket voltages, as measured at the factory and under the conditions shown on the schematic diagram, are shown above. The blank spaces are provided so that the serviceman may fill in actual voltage readings as taken with his own equipment. A normal operating radio should be used for these measurements.

Voltmeter resistance.....Ohms Per Volt.

Readings taken with.....Volts at Spark Plate.

All voltages measured from socket terminals to chassis.

TUNER ADJUSTMENT PROCEDURE:

CATHODE DELAY ADJUSTOR (Illustration #110) (This adjustment should not be made unless it is necessary to replace the Delay Adjustor or the setting is definitely proven to be faulty).

1. Disconnect antenna and turn radio on.
2. Allow set to warm up.
3. Depress station selector bar.
4. Set voltage at K_2 of the 12AU7 trigger tube (Pin #8) to 8.0 volts by adjusting Illustration 110 while the tuner is seeking and with exactly 6.0 volts at the spark plate.

NOTE: For all other tuner adjustments, see Bulletin 6D-620.

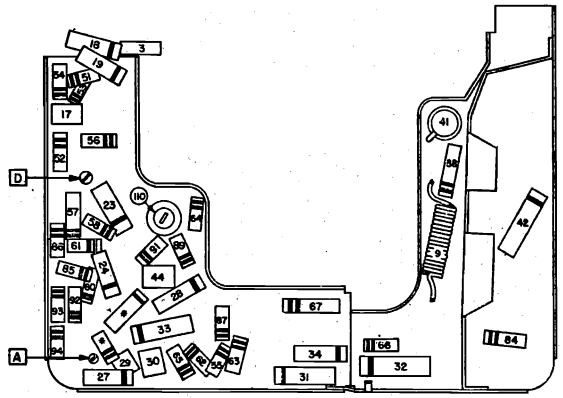

PARTS LAYOUT — CHASSIS VIEW

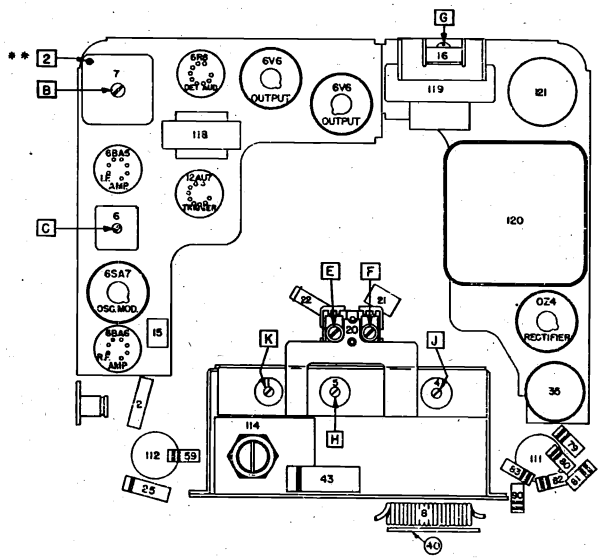

PARTS LAYOUT — TUNER VIEW

*Resistor and condenser are included in the 2nd IF Assy.

**Connect vacuum tube voltmeter between this point and ground during alignment.

©John F. Rider

Compliments of www.nucow.com

MODELS 982582,
982583, Oldsmobile

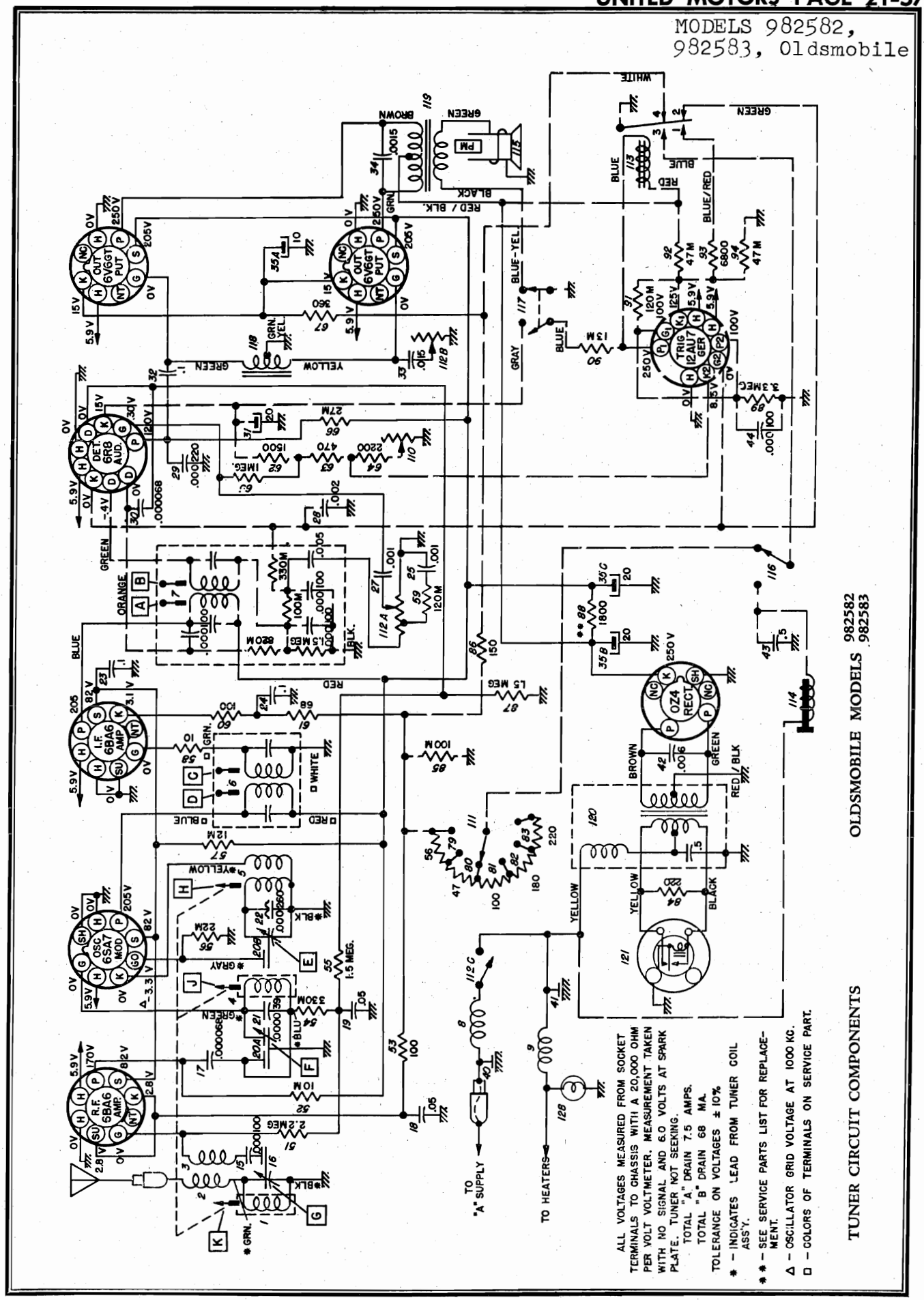

©John F. Rider

Compliments of www.nucow.com

MODELS 982582,
982583, Oldsmobile

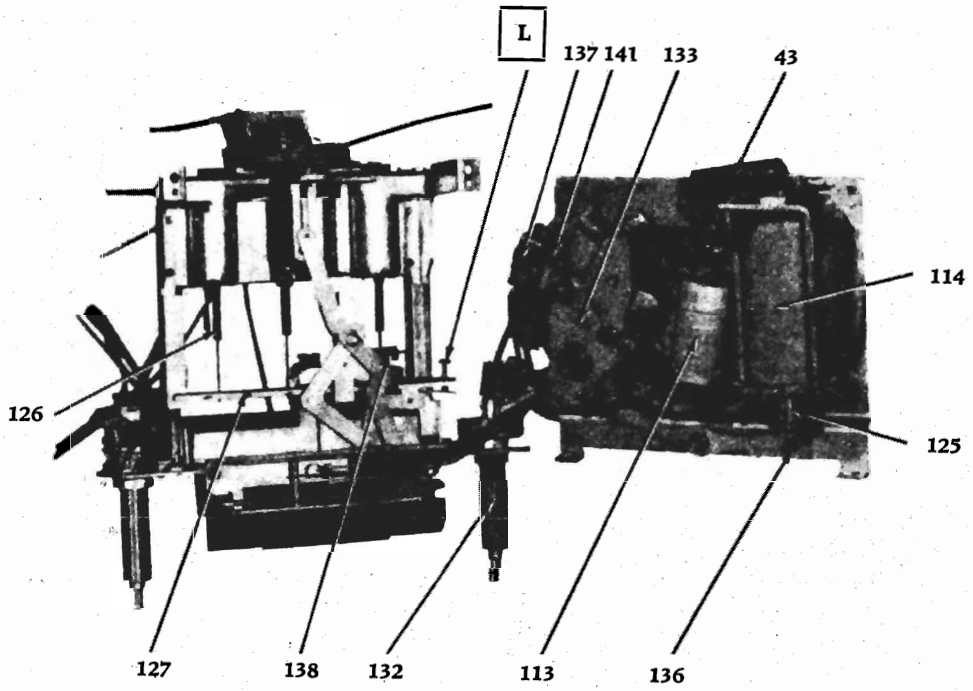

TUNER UNFOLDED

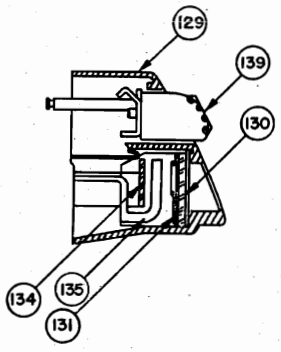

ESCUTCHEON
CROSS-SECTION

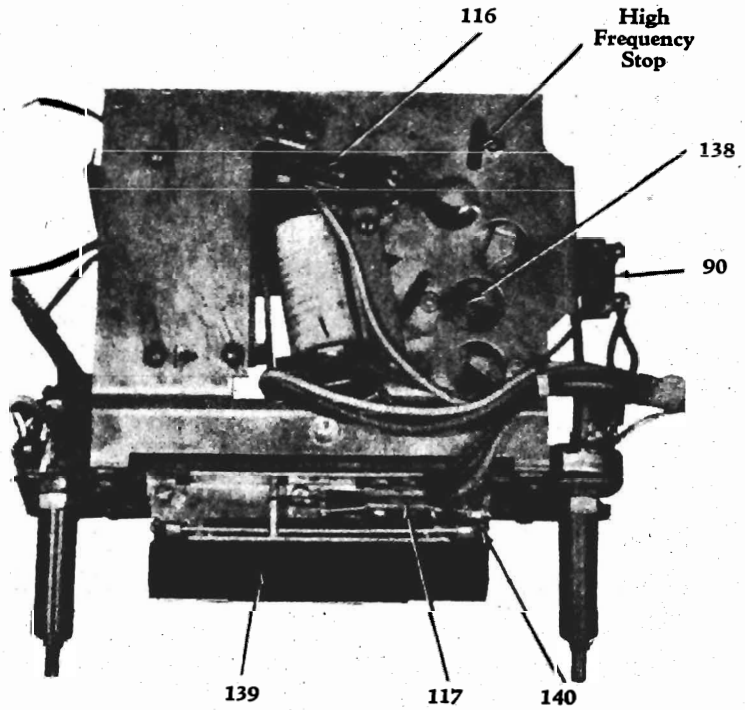

TUNER

©John F. Rider

Compliments of www.nucow.com

MODELS 982582, 982583, Oldsmobile

SERVICE PARTS LIST

Illus. No.	Production Part No.	Service Part No.	Description
			ELECTRICAL PARTS
			Coils
1	7257979	7257979	Antenna
2	7255738	7255738	Antenna Series Choke
3	7240251	7240251	Antenna Spark Choke
4	7257979	7257979	R.F.
5	7259665	7259665	Oscillator
6	7258849	1219508	1st I.F. Assy.
7	7259350	1219602	2nd I.F. Assy.
8	1217846	1217846	A Spark Choke
9	1217846	1217846	Hash Choke
			Condensers
15	7239184	G 101	.000100 mfd Mica
16	7258160	7258160	Antenna Trimmer
17	7238793	G 680	.000068 mfd Mica
18	7236842	E 503	.05 mfd 200 V Tubular
19	7236842	E 503	.05 mfd 200 V Tubular
20	7242454	7242454	Dual Trimmer
20A			R.F. Section
20B			Oscillator Section
21	7258221	G 390	.000039 mfd Mica
22	7257567	7257567	.000260 mfd Compensating
23	7238788	E 104	.1 mfd 400 V Tubular
24	1209306	E 104	.1 mfd 200 V Tubular
25	1218883	E 102	.001 mfd 600 V Tubular
27	1218883	E 102	.001 mfd 600 V Tubular
28	7237836	E 202	.002 mfd 600 V Tubular
29	7238972	G 221	.000220 mfd Mica
30	1219550	G 680	.000068 mfd Mica
31	1219660	1219660	20 mfd 50 V Electrolytic
32	1219495	E 104	.1 mfd 400 V Tubular
33	7237719	7237719	.015 mfd 600 V Tubular
34	7236134	7236134	.0015 mfd 800 V Tubular
35	7259128	7259128	Electrolytic
35A			10 mfd 100 V
35B			20 mfd 400 V
35C			20 mfd 400 V
40	7241259	7241259	Spark Plate Assy.
41	1217848	1217848	Chassis Plate Condenser
42	7240906	H 602	.006 mfd 1600 V Tubular
43	1219511	E 504	.5 mfd 100 V Tubular
44	7239184	G 101	.000100 mfd Mica
			Resistors
51	1211147	A 225	2.2 Megohms ½ W Insulated
52	1211085	B 103	10,000 Ohms 1 W Insulated
53	1213217	A 101	100 Ohms ½ W Insulated
54	7240732	A 334	330,000 Ohms ½ W Insulated
55	1211142	A 155	1.5 Megohms ½ W Insulated
56	1211192	A 223	22,000 Ohms ½ W Insulated
57	1212491	1212491	12,000 Ohms 2 W Insulated
58	1215107	A 100	10 Ohms ½ W Insulated
59	1213271	1213271	120,000 Ohms ½ W Insulated
60	1213217	A 101	100 Ohms ½ W Insulated
61	1215558	1215558	68 Ohms ½ W Insulated
62	1219488	1219488	1500 Ohms ½ W Insulated
63	1219487	1219487	470 Ohms ½ W Insulated
64	1214545	A 222	2200 Ohms ½ W Insulated
65	7238873	A 105	1 Megohm ½ W Insulated
66	1213342	B 273	27,000 Ohms 1 W Insulated
67	7234563	7234563	360 Ohms 1 W Insulated
79	1214540	1214540	56 Ohms ½ W Insulated
80	1213489	1213489	47 Ohms ½ W Insulated
81	1213217	A 101	100 Ohms ½ W Insulated
82	1215559	1215559	180 Ohms ½ W Insulated
83	7257835	A 221	220 Ohms ½ W Insulated
84	7237994	B 221	220 Ohms 1 W Insulated
85	1213270	A 104	100,000 Ohms ½ W Insulated
86	1213220	A 151	150 Ohms ½ W Insulated
87	1211142	A 155	1.5 Megohm ½ W Insulated
88	1214573	C 272 B 562	1800 Ohm 2 W Wire Wound (Replace with C 272 and B 562 in parallel)
89	1214564	A 335	3.3 Megohm ½ W Insulated
*90	*7231539	*7231539	13,000 Ohms 1 W Insulated
91	1213271	1213271	120,000 Ohms ½ W Insulated

*This resistor was 15,000 Ohms until Serial # 82222 - 76 & 88 / 83179 - 98 —Use above Value in Service.

©John F. Rider

Compliments of www.nucow.com

MODELS 982582, 982583, Oldsmobile

SERVICE PARTS LIST

Illus. No.	Production Part No.	Service Part No.	Description
			Resistors (Continued)
92	1216157	B 473	47,000 Ohms 1 W Insulated
93	1216154	1216154	6800 Ohms 1 W Insulated
94	1216157	B 473	47,000 Ohms 1 W Insulated
			Tubes
	1217690	5252	6BA6
	7237752	5222	6SA7
	1219485	5328	12AU7
	1219496	5541	6R8
	1213793	5241	6V6GT
	1211924	5003	0Z4
			Miscellaneous Electrical
	7259352	7259352	A. Lead and Fuse Holder Assy.
112	7259034	7259034	Control - Volume - Tone and Switch
112A			Volume
112B			Tone
112C			Switch
111	7259021	7259021	Control - Sensitivity
110	7242204	7242204	Delay Adjustor
113	7259009	7259009	Relay
114	7259010	1219661	Solenoid
125	7259164	7259164	Solenoid Plunger Assy.
115	7258146	7258146	Speaker
116	7259011	7259011	Switch - Tuner Return
117	7259012	7259012	Switch - Station Selector
118	7258941	7258941	Transformer - Input
119	7259324	7259324	Transformer - Output
120	7259375	7255881	Transformer - Power
121	7239124	8542	Vibrator - Non-Synchronous
			MECHANICAL PARTS
			Chassis
	7256742	7256742	Antenna Connector
	1217820	1217820	Socket - Dial Light
	7236279	7236279	Socket - Octal
	7259307	7259307	Socket - 9 Pin Miniature
	7258073	7258073	Socket - 7 Pin Miniature
	7239125	7239125	Socket - Vibrator
			Tuner
126	7259201	7259201	Core - Tuning Core
127	7259178	7259178	Core - Guide Bar
128	187189	44	Dial Light
129	7259287	7259287	Escutcheon Assy.
130	7259344	7259344	Dial
131	7259496	7259496	Dial Backplate
132	7259017	7259017	Manual Drive Shaft Assy.
133	1219610	1219610	Motor Gear Train Assy.
134	7256688	7256688	Pointer Backplate
135	1219174	1219174	Pointer Tip Pkg.
136	7259100	7259100	Spring Clip
137	7259207	7259207	Spring - Worm Anti-rattle
138	7259055	7259055	Spring - Motor Power
139	1219611	1219611	Station Selector Bar Pkg.
	7259028	7259028	Station Selector Bar & Shaft Assy.
	7259125	7259125	Switch Operating Ring
			Toggle Plate
140	7259111	7259111	Spring (2)
	7256121	7256121	"C" Washer
141	7259026	7259026	Worm and Bracket Assy.
			INSTALLATION PARTS
	554691	554691	"A" Lead & Condenser Assy.
	1911095	6030	Condenser - Generator
	1912757	6030	Condenser - Ignition
	1912900	6030	Condenser - Regulator
	555348	555348	Clip - Hood Bonding
	414237	414237	Distributor - Insulator Elbow
	7257239	7257239	Distributor - Suppressor
	120151	120151	Fuse - 15 Amps
	7259663	7259663	Knob - Tuner
	7259007	7259007	Knob - Tone Control
	7259008	7259008	Knob - Sensitivity Control
	7240138	6013	Static Collector
	7258815	7258815	Trim Plate - 98 Series
	7259626	7259626	Trim Plate - 88 and 76 Series

©John F. Rider

Compliments of www.nucow.com

MODEL 986388, Chevrolet

GENERAL

MOUNTING—All 1950 Chevrolet Cars.

TUBES—Five, plus rectifier.

SPEAKER—6" x 9" Elliptical, Permanent Magnet.

TUNING—Manual and 5 P. B. Mechanical.

ANTENNA TRIMMER COMPENSATION—For Antennas Between 0.000058 - 0.000090 Mfd.

TUNING RANGE—550-1600 KC.

PUSH BUTTON SETUP PROCEDURE

Pull Push Button down and out. Tune in desired station manually. Push button all the way in.

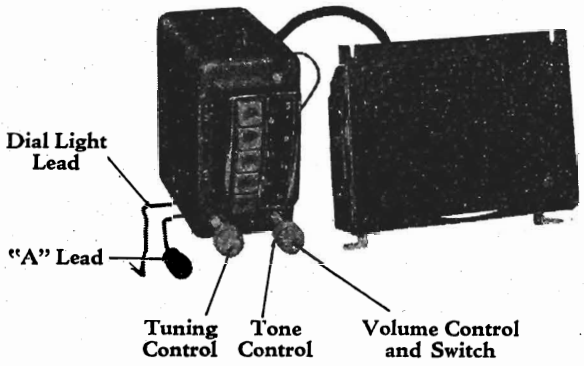

MODEL 986388

ALIGNMENT PROCEDURE

Output Meter Connections ..... Across Voice Coil
Generator Return ..... To Receiver Chassis
Dummy Antenna ..... In Series With Generator
Volume Control Position ..... Maximum Volume
Tone Control Position ..... Treble
Generator Output ..... Minimum for Readable Indication

Steps	Series Condenser or Dummy Antenna	Connect Signal Generator to	Signal Generator Frequency	Tune Receiver to	Adjust in Sequence For Max. Output
1	0.1 Mfd.	6BE6 Grid (Pin #7)	260 KC	High Frequency Stop	A, B, C, D
2	0.000068 Mfd.	Antenna Connector	1615 KC	High Frequency Stop	*E, F, G
3	0.000068 Mfd.	Antenna Connector	1400 KC	Signal Generator Signal	J, K
4	0.000068 Mfd.	Antenna Connector	1615 KC	High Frequency Stop	F, G
5	0.000068 Mfd.	Antenna Connector	1000 KC	Signal Generator Signal	L**

*Before making this adjustment check mechanical setting of oscillator core "H." The rear of the core should be 1 25/32" from the mounting end of the coil form. (This measurement is readily made by inserting a suitable plug in the mounting end of the coil form.) If adjustment is necessary, first dissolve the glyptal seal on the core studs. Core adjustments should be made with an insulated screw driver, and core studs should be cemented in place with glyptal or household cement after alignment.

**L is the pointer adjustment screw which is on the connecting link, between the pointer assembly and core guide bar (See tuner Dwg.). It should be adjusted so that when looking directly at the dial the pointer is 3/16" below the 1000 KC mark. This setting is to give the correct relationship between the pointer and the dial when the radio is installed in a car.

With the radio installed and the car antenna plugged in adjust the antenna trimmer "G" for maximum volume with the radio tuned to a weak station near 1400 KC (see sticker on case).

©John F. Rider

Compliments of www.nucow.com

MODEL 986388,
Chevrolet

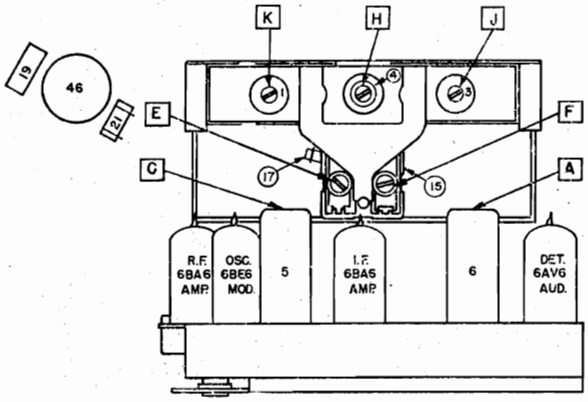

R.F. UNIT

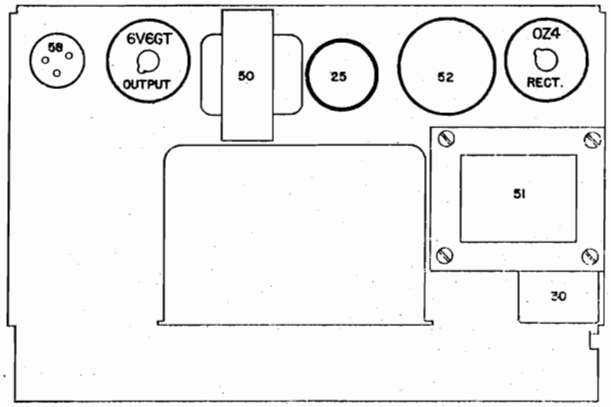

AUDIO UNIT

PARTS LAYOUT — TUBE VIEW

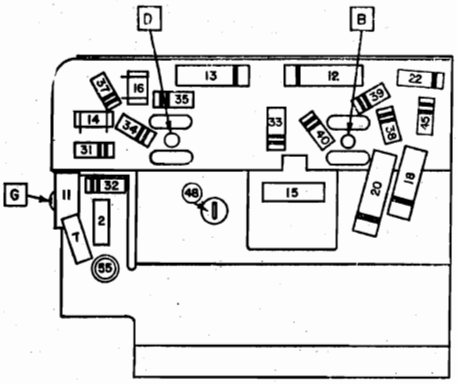

R.F. UNIT

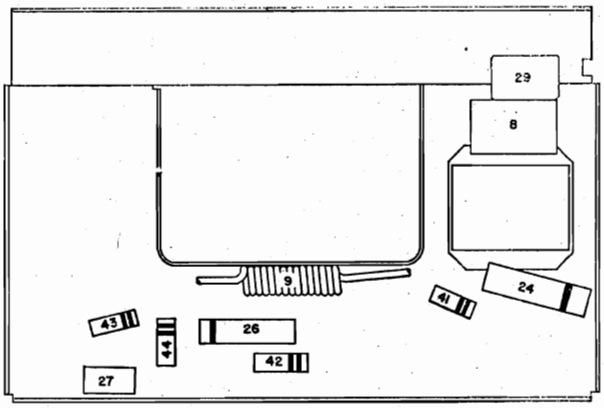

AUDIO UNIT

PARTS LAYOUT — CHASSIS VIEW

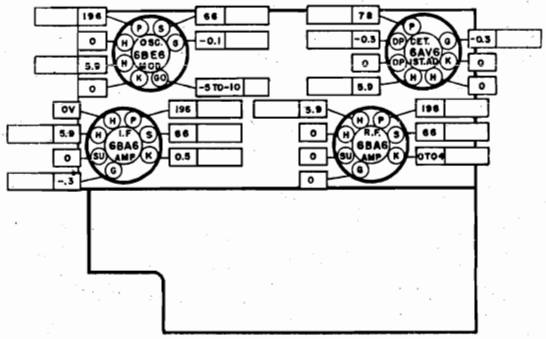

R.F. UNIT

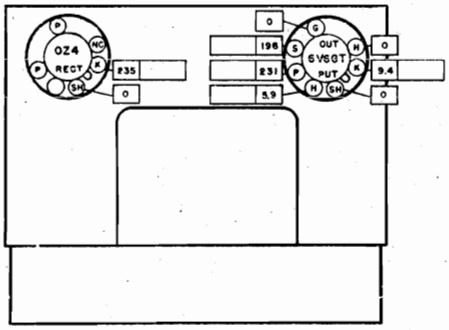

AUDIO UNIT

TUBE SOCKET VOLTAGE CHART

The tube socket voltages, as measured at the factory and under the conditions shown on the schematic diagram on page 3 are shown above. The blank spaces are provided so the service man may fill in the actual voltage readings as taken with his own equipment. A normal operating radio should be used for these measurements.

VOLTMETER RESISTANCE.....OHMS PER VOLT

READINGS TAKEN WITH.....VOLTS AT SPARK PLATE

Voltage measured from socket terminals to chassis and are positive unless marked otherwise.

©John F. Rider

Compliments of www.nucow.com

MODEL 986388,
Chevrolet

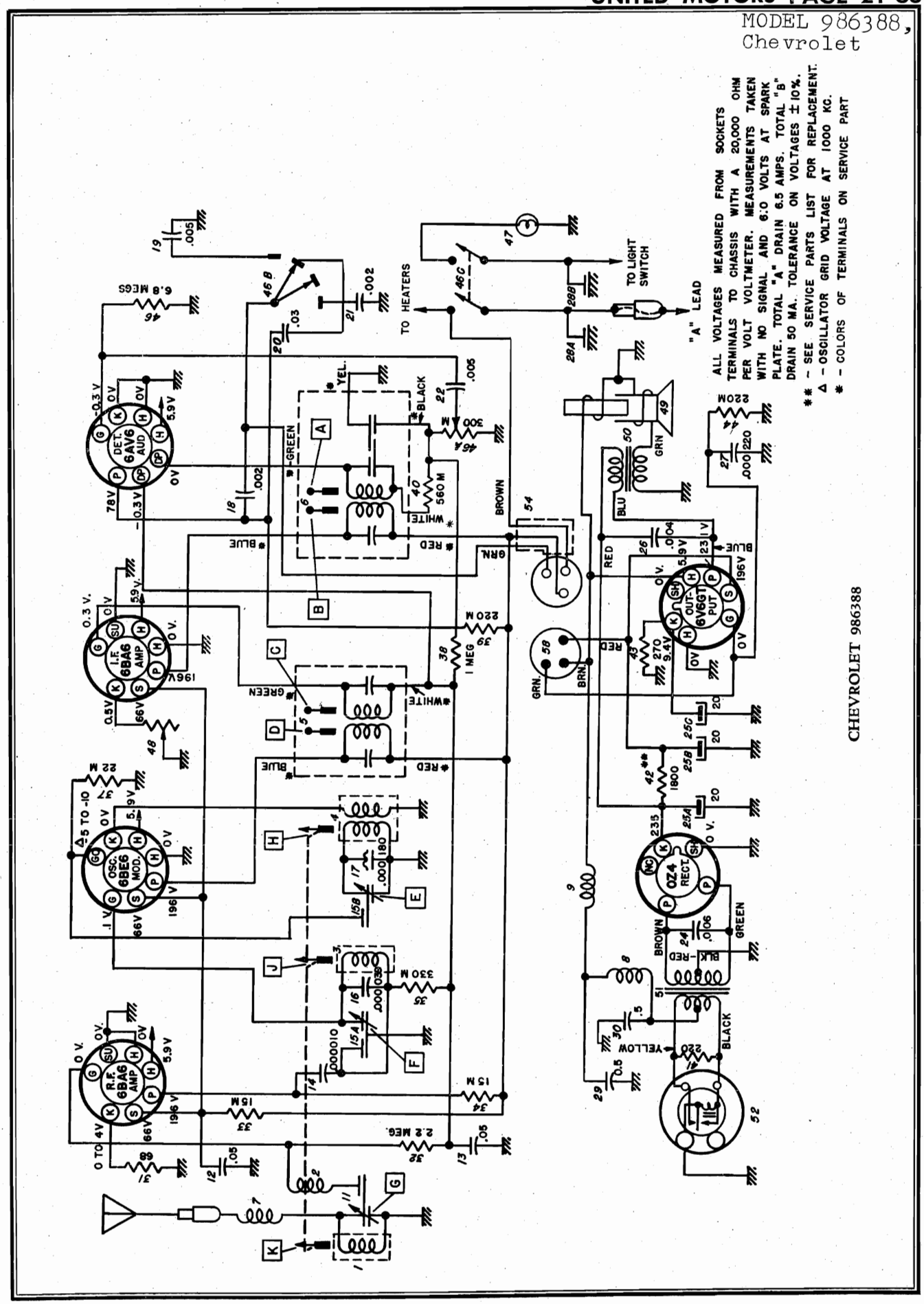

©John F. Rider

Compliments of www.nucow.com

MODEL 986388, Chevrolet

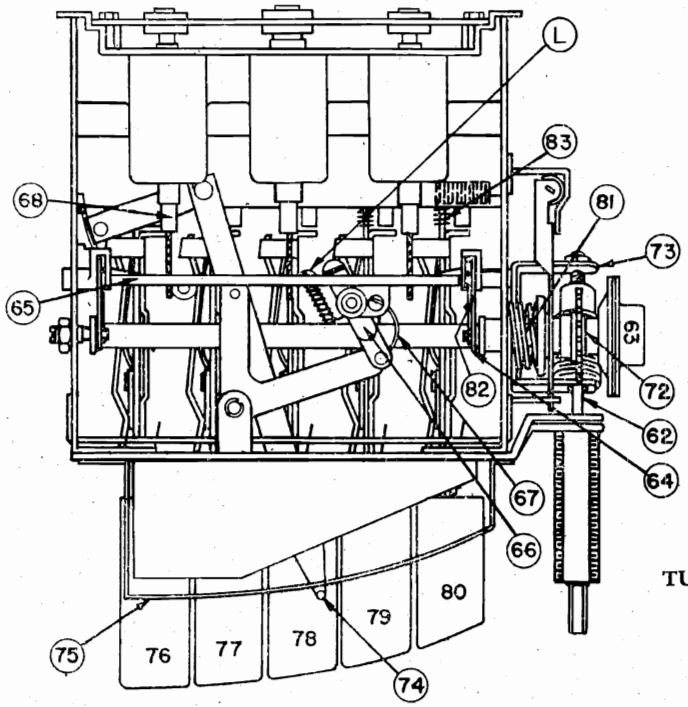

TUNER

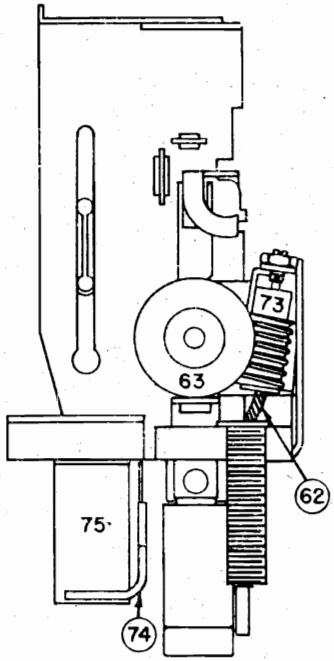

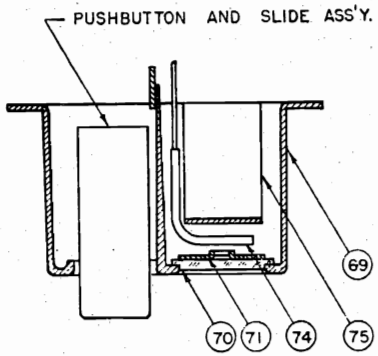

ESCUTCHEON CROSS SECTION

SERVICE PARTS LIST

Illus. No.	Production Part No.	Service Part No.	Description
			ELECTRICAL PARTS
			Coils
1	7258914	7258914	Antenna
2	7240251	7240251	Antenna Spark Choke
3	7258914	7258914	R.F.
4	7258911	7258911	Oscillator
5	7258188	1218725	1st IF
6	7258198	1218726	2nd IF
7	7258502	7258502	Antenna Series Choke
8	7258743	7258743	Hash Choke
9	7241708	7241708	Hash Choke
			Condensers
11	7258000	7258000	Antenna Trimmer Cond.
12	7236841	E 503	.05 mfd 400 V Tubular
13	7236842	E 503	.05 mfd 200 V Tubular
14	1218371	G 100	.000010 mfd Ceramic
15	7242454	7242454	Dual Trimmer
15A			RF Section
15B			Oscillator Section
16	7258221	G 390	.000039 mfd Ceramic
17	7257424	7257424	.000180 mfd Compensating
18	1219634	E 202	.002 mfd 600 V Tubular
19	7230767	E 502	.005 mfd 600 V Tubular
20	7242448	E 303	.03 mfd 400 V Tubular
21	1219632	E 202	.002 mfd 600 V Tubular
22	1219635	E 502	.005 mfd 600 V Tubular
24	7240906	H 602	.006 mfd 1600 V Tubular
25	7240724	M 908	Electrolytic
25A			20 mfd 400 V
25B			20 mfd 400 V
25C			20 mfd 25 V
26	7233243	H 402	.004 mfd 800 V Tubular
27	7236105	G 221	.000220 mfd Molded
28	7258332	7258332	Dual Spark Plate
28A			"A" Lead Section
28B			Dial Light Section
29	7257879	E 504	.5 mfd 100 V Tubular
30	7257879	E 504	.5 mfd 100 V Tubular

©John F. Rider

Compliments of www.nucow.com

SERVICE PARTS LIST

Illus. No.	Production Part No.	Service Part No.	Description
			Miscellaneous Electrical Parts
46	7258084	7258084	Control - Volume, Tone and Switch
46A			Volume Control
46B			Tone Control
46C			Switch
47	115273	51	Lamp - Dial
48	7242204	7242204	Sensitivity Control
49	7249381	6111	Speaker - 6 x 9 Elliptical PM
50	7256009	7256009	Transformer - Output
51	7258747	7258747	Transformer - Power
52	7239124	8542	Vibrator - Non-synchronous
			MECHANICAL PARTS
			Chassis - RF Unit
54	7258022	7258022	Cable
55	7239475	7239475	Socket - Antenna
56	1218724	1218724	Socket - Dial Light
	7258073	7258073	Socket - 7 Pin Miniature
			Chassis - Audio Unit
58	7258111	7258111	Plug - Cable
	7236279	7236279	Socket - Octal Tube
	7239125	7239125	Socket - Vibrator
			Tuner
	147481	147481	Ball Bearings (10)
62	7258608	7258608	Drive Shaft - Manual
63	7258072	7258072	Clutch Disc - Driven
64	7258203	7258203	Connecting Link - Core Bar
65	7258206	7258206	Core Guide Bar
66	7256271	7256271	Connecting Link Pointer
67	7255992	7255992	Spring - Pointer Connecting Link
68	7258468	7258468	Core - Iron Tuning
69	7258963	7258963	Escutcheon
70	7258002	7258002	Dial
71	7258962	7258962	Dial Backplate
72	7259480	7259480	Gear and Bushing
73	7258052	7258052	Gear and Bracket - Worm
74	7258059	7258059	Pointer Assy.
	1218848	1218848	Pointer Tip Package
75	7258961	7258961	Pointer Backplate
76	1219558	1219558	Push Button and Slide No. 1
77	1219559	1219559	Push Button and Slide No. 2
78	1219560	1219560	Push Button and Slide No. 3
79	1219561	1219561	Push Button and Slide No. 4
80	1219562	1219562	Push Button and Slide No. 5
81	7258756	7258756	Spring - Clutch
82	7257415	7257415	Spring - Core Bar Connecting Link
83	7255984	7255984	Spring - Pushbutton Return

INSTALLATION PARTS

	1912900	1912900	Condenser - Ammeter
	1911095	6030	Condenser - Generator
	1910147	6030	Condenser - Ignition Coil
	1912900	1912900	Condenser - Regulator
	1887829	6003	Distributor Suppressor
	7258880	7258880	Knob - Control
	7258879	7258879	Knob - Dummy
	7258882	7258882	Knob - Tone Control
	7257918	7257918	Nut - Speed
	1888204	1888204	Rubber Nipple - Distributor Suppressor
	7257920	7257920	Spacer - RF Mtg. (inner)
	7257922	7257922	Spacer - RF Mtg. (outer)
	7257925	7257925	Speaker Shroud
	494786	6009	Static Collector - Wheel
	7257917	7257917	Stud - Audio Unit Mtg.
	7257924	7257924	Trim Plate - Instrument Panel
	7257921	1218728	Fuse Holder Body - Male
	1912900	1912900	Condenser, Regulator

Resistors

31	1215558	1215558	68 Ohms ½ W Insulated
32	1211147	A 225	2.2 Megohms ½ W Insulated
33	7233653	C 153	15,000 Ohms 2 W Insulated
34	7237595	B 153	15,000 Ohms 1 W Insulated
35	7240732	A 334	330,000 Ohms ½ W Insulated
37	1214550	A 223	22,000 Ohms ½ W Insulated
38	7238873	A 105	1 Megohm ½ W Insulated
39	1214555	A 224	220,000 Ohms ½ W Insulated
40	1214560	A 564	560,000 Ohms ½ W Insulated
41	7237994	B 221	220 Ohms 1 W Insulated
42	1214573	C 272, B 562	1800 Ohms 2 W — Replace with C 272 and B 567 in parallel
43	1213846	B 271	270 Ohms 1 W Insulated
44	1214555	A 224	220,000 Ohms ½ W Insulated
45	7241937	A 685	6.8 Megohms ½ W Insulated

Tubes

1213793	5241	6V6GT
1211924	5003	0Z4
1217690	5252	6BA6
1217691	5253	6BE6
1218506	5262	6AV6

©John F. Rider
Compliments of www.nucow.com

MODEL 986389,
Chevrolet

GENERAL

MOUNTING — All 1950 Chevrolet Cars

TUBES — Five, plus Rectifier

SPEAKER — 6″ Electro-Magnetic or 6″ Permanent Magnet

TUNING — Manual

ANTENNA TRIMMER COMPENSATION
—For Antennas Between 0.000060 - 0.000090 Mfd.

TUNING RANGE — 535 - 1610 KC.

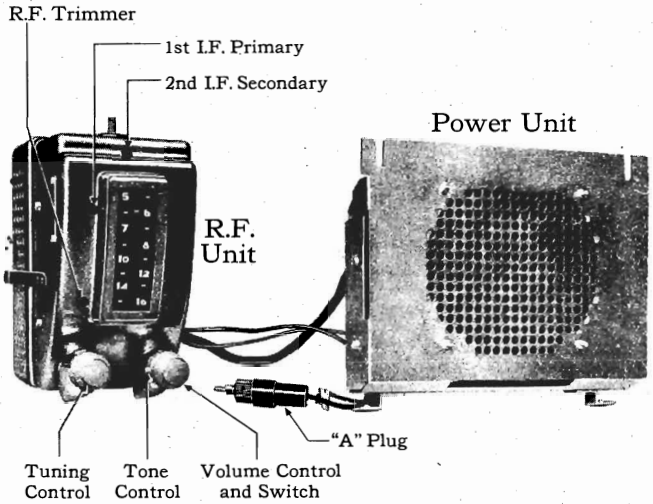

MODEL 986389

ALIGNMENT PROCEDURE:

Output Meter Connection ..... Across Voice Coil

Generator Return ..... To Receiver Chassis

Dummy Antenna ..... In Series With Generator

Volume Control Position ..... Maximum Volume

Tone Control Position ..... Treble

Generator Output ..... Minimum for Readable Indication

Steps	Series Condenser or Dummy Antenna	Connect To	Signal Generator Frequency	Tune Receiver To	Adjust In Sequence For Max. Output
1	0.02 Mfd.	6BE6 Grid (Pin #7)	257.5 KC.	High Frequency Stop	A, B, C, D
2	0.000065 Mfd	Antenna Connector	1610 KC.	High Frequency Stop	E, F, G
3	0.000065 Mfd.	Antenna Connector	1400 KC.	Signal Generator Signal	H, J, K
4	0.000065 Mfd.	Antenna Connector	1610 KC.	High Frequency Stop	F, G
5	0.000065 Mfd.	Antenna Connector	1400 KC.	Signal Generator Signal	*Pointer Adjust. Screw

*Refer to the Pointer String Hookup drawing — This should be adjusted so the pointer reads 1400 KC.

With the radio installed and the car antenna plugged in adjust the antenna trimmer "G" for maximum volume with the radio tuned to a weak station near 1400 KC.

©John F. Rider

Compliments of www.nucow.com

MODEL 986389,
Chevrolet

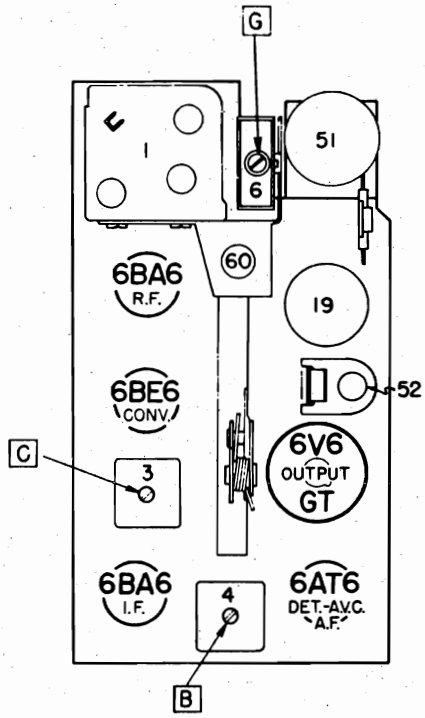

PARTS LAYOUT—TUBE VIEW

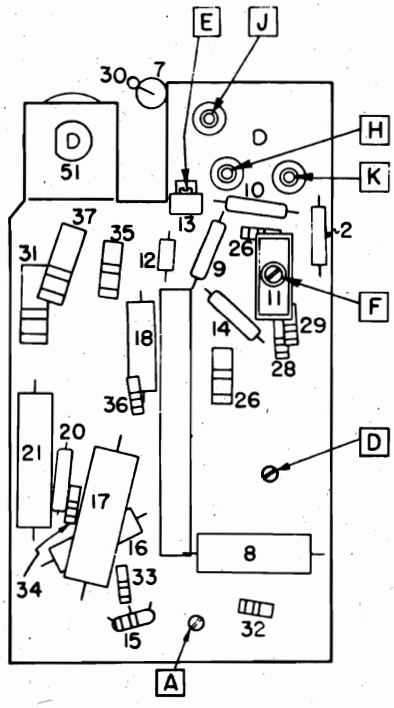

PARTS LAYOUT—CHASSIS VIEW

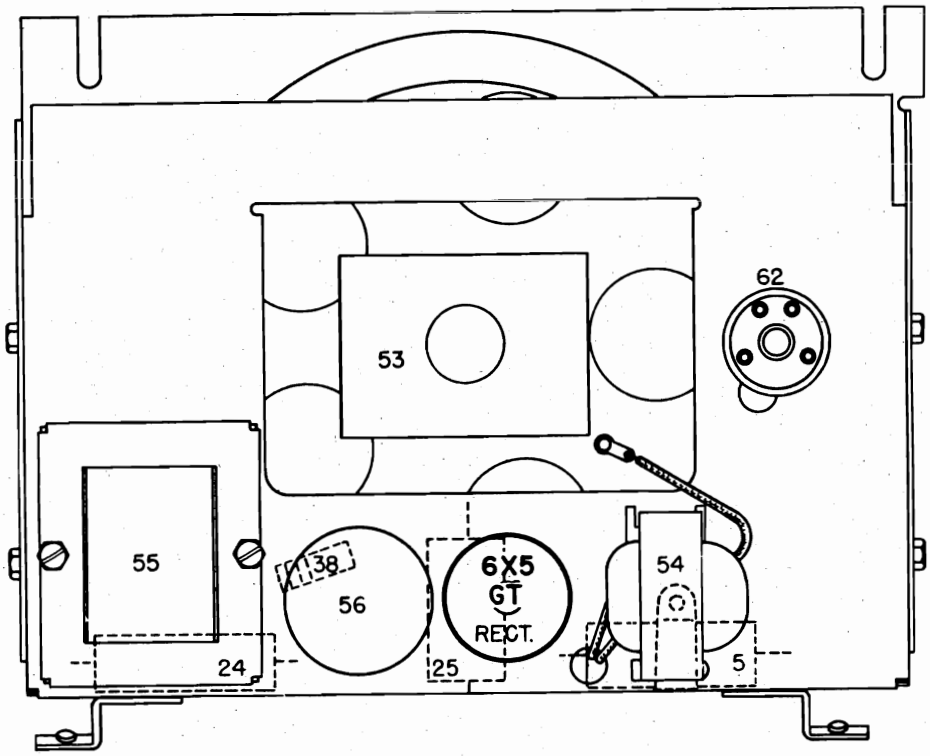

PARTS LAYOUT—POWER UNIT

©John F. Rider

Compliments of www.nucow.com

MODEL 986389,
Chevrolet

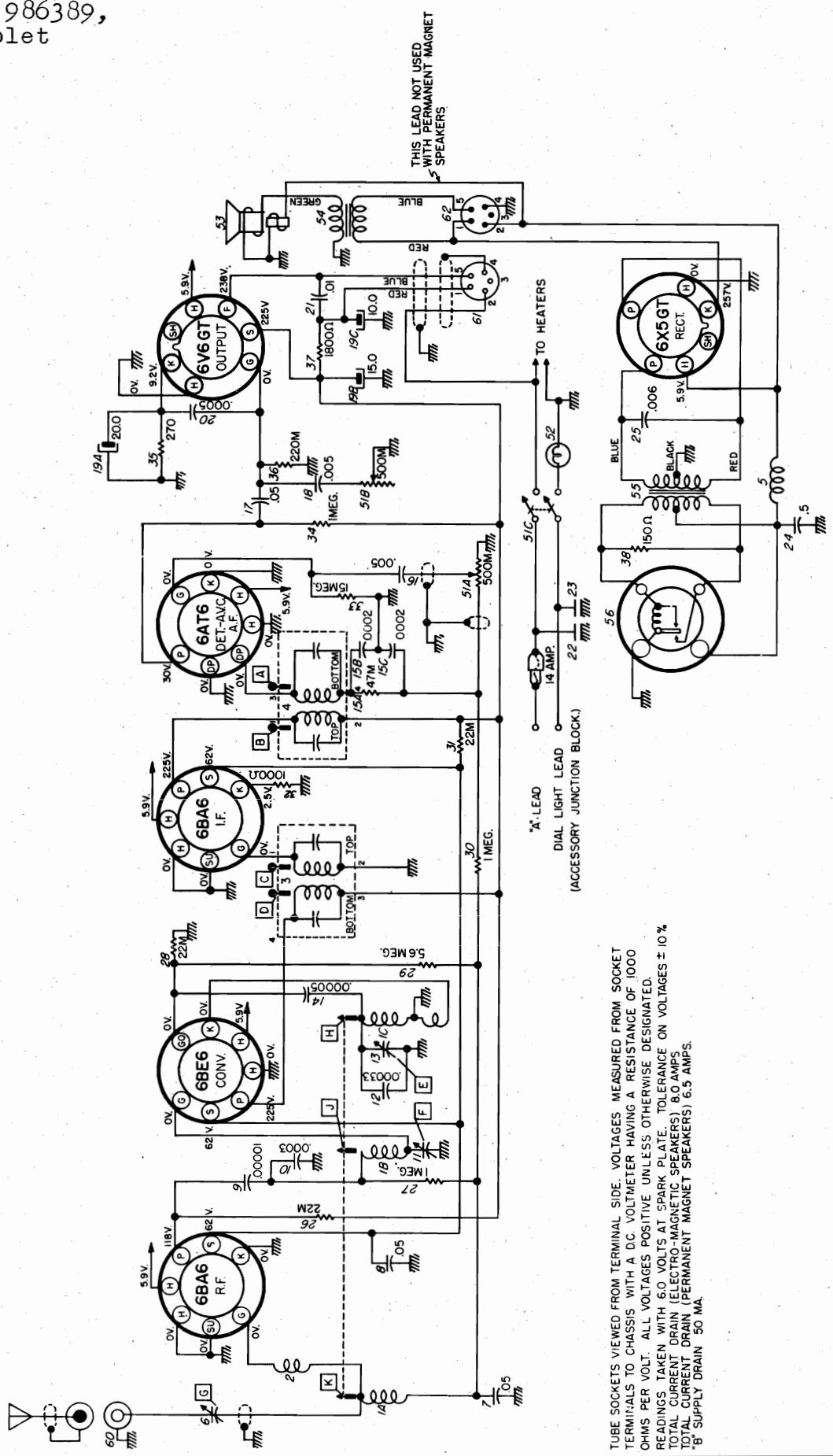

TUBE SOCKETS VIEWED FROM TERMINAL SIDE. VOLTAGES MEASURED FROM SOCKET TERMINALS TO CHASSIS WITH A D.C. VOLTMETER HAVING A RESISTANCE OF 1000 OHMS PER VOLT. ALL VOLTAGES POSITIVE UNLESS OTHERWISE DESIGNATED.
READINGS TAKEN WITH 6.0 VOLTS AT SPARK PLATE. TOLERANCE ON VOLTAGES ± 10%.
TOTAL CURRENT DRAIN (ELECTRO-MAGNETIC SPEAKERS) 8.0 AMPS.
TOTAL CURRENT DRAIN (PERMANENT MAGNET SPEAKERS) 6.5 AMPS.
"B" SUPPLY DRAIN 50 MA.

©John F. Rider

Compliments of www.nucow.com

MODEL 986389,
Chevrolet

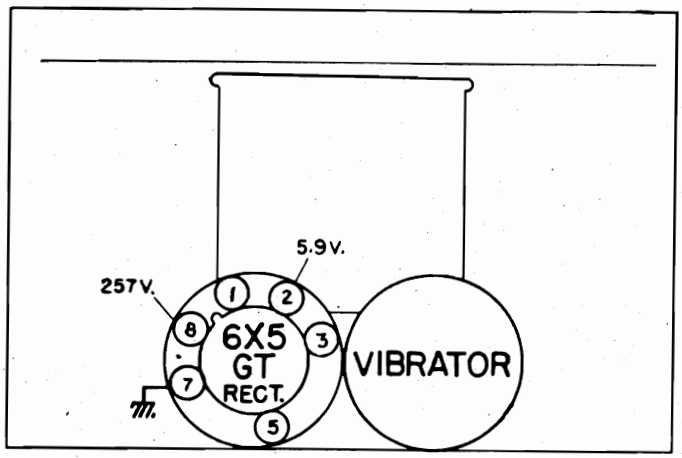

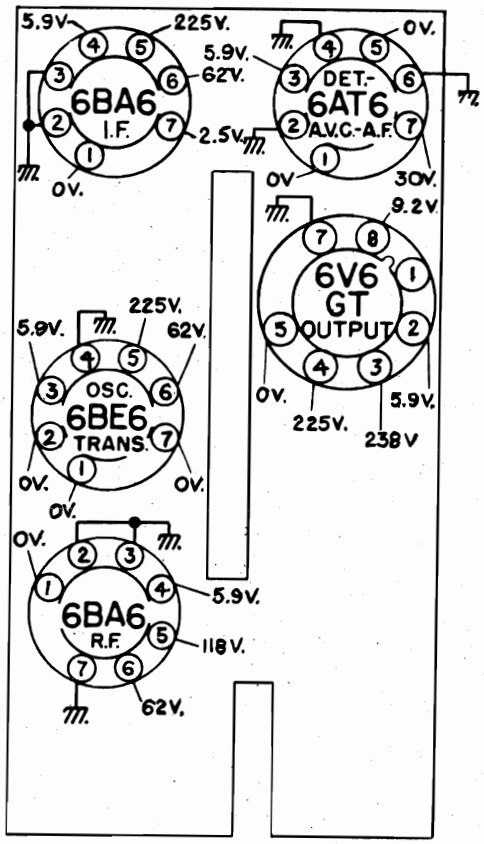

BOTTOM VIEW OF TUBE SOCKETS

READINGS TAKEN FROM TUBE SOCKET CONTACTS TO CHASSIS WITH A D. C. VOLTMETER HAVING A RESISTANCE OF 1000 OHMS PER VOLT.

"A" SUPPLY AT SPARK PLATE 6.0 VOLTS
"B" SUPPLY DRAIN APPROXIMATELY 50 MA.

TUBE SOCKET VOLTAGE CHART

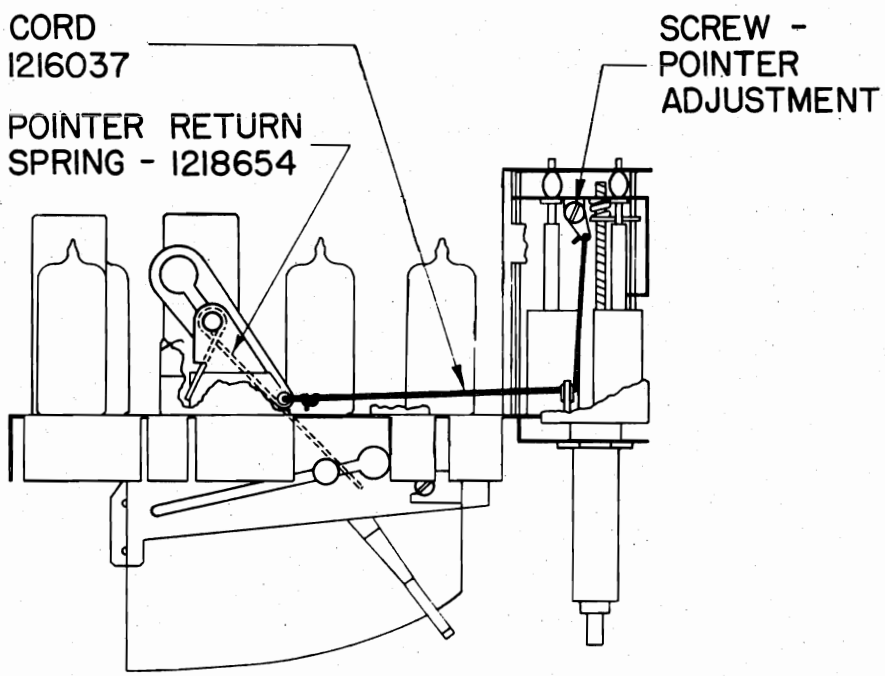

POINTER STRING HOOKUP

©John F. Rider

Compliments of www.nucow.com

MODEL 986389,
Chevrolet

ELECTRICAL PARTS

COILS

Illus. No.	Service Part No.	Production Part No.	Description
1		1219569	Coils-Permeability Tuning
1A			Antenna Coil
1B			R. F. Coil
1C			Oscillator Coil
2		1218639	Antenna Spark Choke
3		1219567	1st I. F. Assembly
4		1219568	2nd I.F. Assembly
5		1219572	Hash Choke

CONDENSERS

Illus. No.	Service Part No.	Production Part No.	Description
6		1218634	Antenna Trimmer
7	E503	7230592	.05 Mfd. 200 V. Tubular
8	E503	7230592	.05 Mfd. 200 V. Tubular
9	G100	1215189	.00001 Mfd. Molded
10	G271	1215553	.0003 Mfd. Molded
11		1218636	R.F. Trimmer
12		1219566	.00033 Mfd.—Silver Mica
13		1218635	Oscillator Trimmer
14	G470	7236141	.00005 Mfd. Molded
15		1219563	Diode Filter Unit
15A			47,000 Ohm
15B			.0002 Mfd.
15C			.0002 Mfd.
16		7230767	.005 Mfd. 100 V. Tubular
17	E503	7230592	.05 Mfd. 200 V. Tubular
18		7230767	.005 Mfd. 100 V. Tubular
19		1218009	Electrolytic Condenser
19A			20 Mfd. 25 V.
19B			15 Mfd. 350 V.
19C			10 Mfd. 350 V.
20		1216881	.0005 Mfd. Molded
21	E103	7233608	.01 Mfd. 600 V.
22		1219577	Spark Plate
23		1219577	Spark Plate
24		7240248	5 Mfd. 100 V. Tubular
25		1219320	.006 Mfd. 1600 V. Tubular

RESISTORS

Illus. No.	Service Part No.	Production Part No.	Description
26	B223	1216156	22,000 Ohm 1 W. Insulated
27	A105	1213282	1 Megohm ½ W. Insulated
28	A223	1214550	22,000 Ohm ½ W. Insulated
29		1215562	5.6 Megohm ½ W. Insulated
30	A105	1213282	1 Megohm ½ W. Insulated
31	C223	7240590	22,000 Ohm 2 W. Insulated
32	A102	1213235	1000 Ohm ½ W. Insulated
33	A156	1213289	15 Megohm ½ W. Insulated
34	A105	1213282	1 Megohm ½ W. Insulated
35	B271	1213846	270 Ohm 1 W. Insulated
36	A224	1214555	220,000 Ohm ½ W. Insulated
37	C182	1214573	1800 Ohm 2 W. Insulated
38	B151	1211005	150 Ohm 1 W. Insulated

TUBES

Production Part No.	Description
1217690	6BA6—R. F. Amplifier
1217691	6BE6—Oscillator—Translator
1217690	6BA6—I.F. Amplifier
1218105	6AT6—Detector—AVC—1st Audio
1213793	6V6GT—Audio Output
1213794	6X5GT—Rectifier

MISCELLANEOUS ELECTRICAL PARTS

Illus. No.	Service Part No.	Production Part No.	Description
51		1218641	Control-Volume, Tone & Switch
51A			Volume Control
51B			Tone Control
51C			On-Off Switch
52		125588	Lamp, Dial (Mazda 55)
53		1219575	Speaker—6" Electro-Magnetic
			or
53		1219576	Speaker—6" Perm. Magnet
54		1219573	Transformer—Output
55		1219571	Transformer—Power
56	8542	1218006	Vibrator

MECHANICAL PARTS

CHASSIS

Illus. No.	Production Part No.	Description
60	1218651	Socket—Antenna Connector
	7236279	Socket—Octal
	1219570	Socket—Miniature
	7239125	Socket—Vibrator
	1218640	Clip—Pilot Lamp
	1219586	Clip—I. F. Transformer Mtg.
61	1218642	Cable & Socket—Power
	1218645	Lead Assy.—Dimmer
	1219574	Plug & Leads Assy.—Power Supply & Speaker
62	1218650	Plug—Plug & Leads Assy.
	1218655	Spring—Case Assembly Cover
	1219579	"A" Connector Assembly
	1219556	Case—Front

TUNER PARTS

Production Part No.	Description
1218621	Pointer Arm
1218623	Pointer Arm Assembly
1219564	Background—Dial
1219565	Background—Pointer
1218644	Dial
1218646	Link & Stud Assy.—Pointer
1218647	Nut—Speed—Dial & Dial Background
1218648	Pointer—Dial
1218654	Spring—Pointer Return
1218659	Stud—Top Mounting

INSTALLATION PARTS

Service Part No.	Production Part No.	Description
	7257921	Body, Fuse Holder
	3690332	Bracket—Receiver Mtg.—Top
	7257984	Block—Serrated—Radio Mtg.
	7257922	Bushing—Control
	3690333	Trim Plate
	147685	Fuse—14 Amp.—25 V.
	3693934	Knob—Tone
	7258879	Knob—Dummy
	7258880	Knob—Includes Set Screw—Volume & Tuning
6015	1911095	Condenser—Generator
	1910147	Condenser—Ignition Coil
	1912900	Condenser—Voltage Regulator
		or
	557531	Condenser—Voltage Regulator
	494786	Static Collector Assy.
	1888204	Nipple—Suppressor
	7257917	Stud—Power Supply Mtg.
	7257925	Shroud—Speaker
	1887829	Suppressor Distributor

©John F. Rider

Compliments of www.nucow.com

MODEL 986443, Chevrolet

MOUNTING—All 1950 Chevrolet Trucks.

TUBES—Five, plus rectifier.

SPEAKER—6″ x 9″ Elliptical, Permanent Magnet.

TUNING—Manual and 5 P. B. Mechanical.

ANTENNA TRIMMER COMPENSATION—For Antennas Between 0.000058 - 0.000090 Mfd.

TUNING RANGE—550-1600 KC.

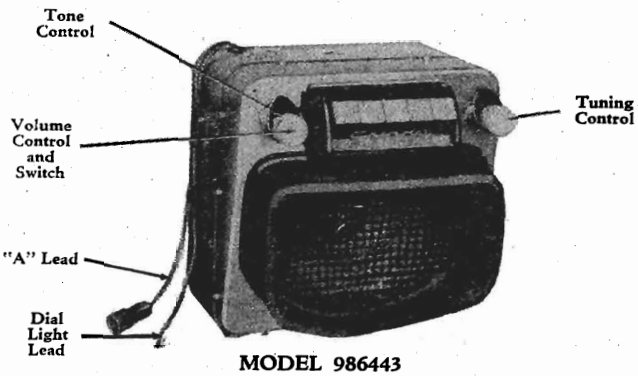

MODEL 986443

PUSH BUTTON SET-UP PROCEDURE

Pull Push Button left and out. Tune in desired station manually. Push button all the way in.

ALIGNMENT PROCEDURE

Output Meter Connections ..... Across Voice Coil

Generator Return ..... To Receiver Chassis

Dummy Antenna ..... In Series With Generator

Volume Control Position ..... Maximum Volume

Tone Control Position ..... Treble

Generator Output ..... Minimum for Readable Indication

Steps	Series Condenser or Dummy Antenna	Connect Signal Generator to	Signal Generator Frequency	Tune Receiver to	Adjust in Sequence for Max. Output
1	0.1 Mfd.	6SA7 Grid (Pin #8)	260 KC	High Frequency Stop	A, B, C, D
2	0.000068 Mfd.	Antenna Connector	1615 KC	High Frequency Stop	*E, F, G
3	0.000068 Mfd.	Antenna Connector	1000 KC	Signal Generator Signal	J, K
4	0.000068 Mfd.	Antenna Connector	1615 KC	High Frequency Stop	F, G
5	0.000068 Mfd.	Antenna Connector	1000 KC	Signal Generator Signal	L**

*Before making this adjustment check mechanical setting of oscillator core "H." The rear of the core should be $1\frac{25}{32}$″ from the mounting end of the coil form. (This measurement is readily made by inserting a suitable plug in the mounting end of the coil form.) If adjustment is necessary, first dissolve the glyptal seal on the core studs. Core adjustments should be made with an insulated screw driver, and core studs should be cemented in place with glyptal or household cement after alignment.

**L is the pointer adjustment screw which is on the connecting link, between the pointer assembly and core guide bar (See tuner Dwg.) It should be adjusted so that when looking directly at the dial the pointer is on the 1100 KC mark. This setting is to give the correct relationship between the pointer and the dial when the radio is installed in a car.

With the radio installed and the car antenna plugged in adjust the antenna trimmer "G" for maximum volume with the radio tuned to a weak station near 1400 KC (see sticker on case).

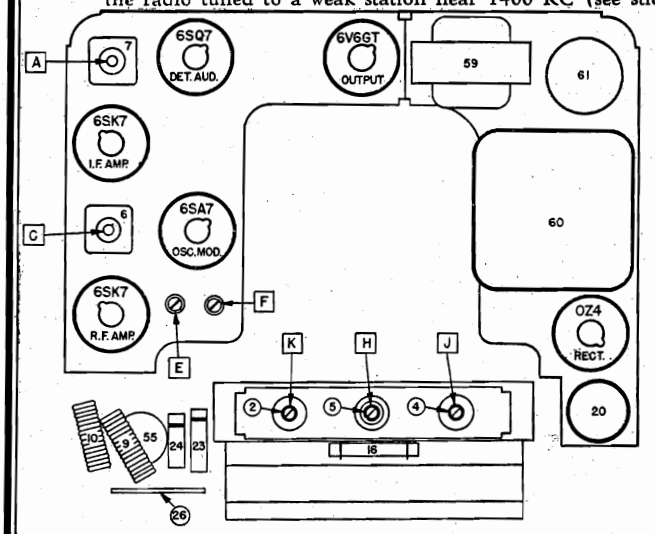

PARTS LAYOUT—TUBE VIEW

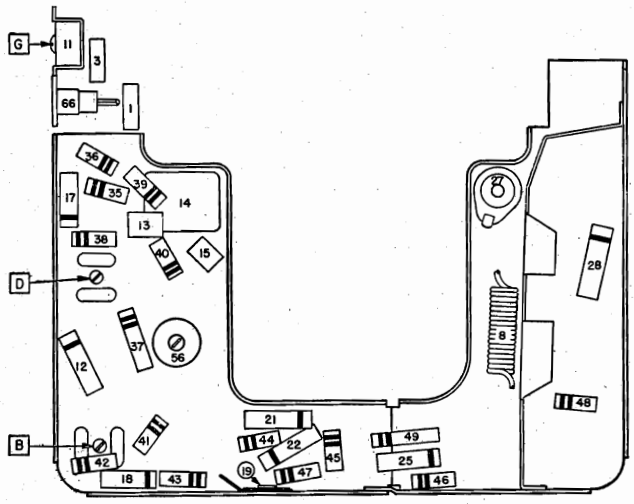

PARTS LAYOUT—CHASSIS VIEW

©John F. Rider

Compliments of www.nucow.com

MODEL 986443,
Chevrolet

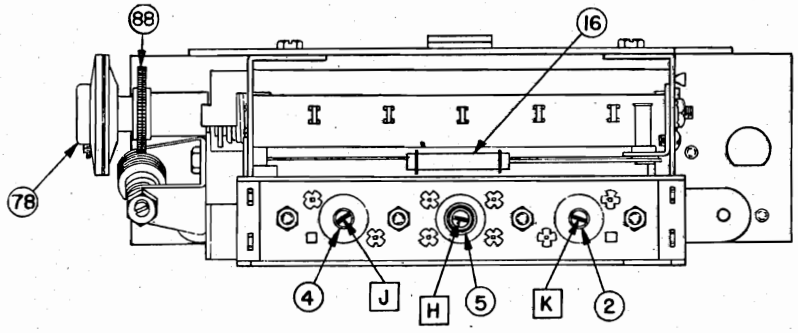

TUNER

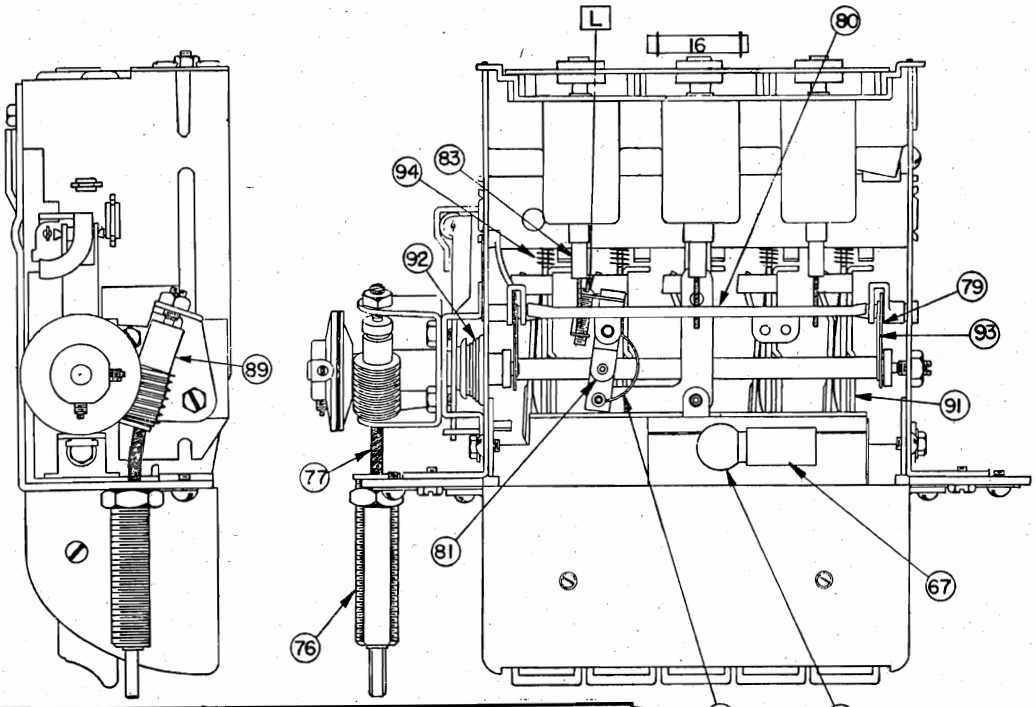

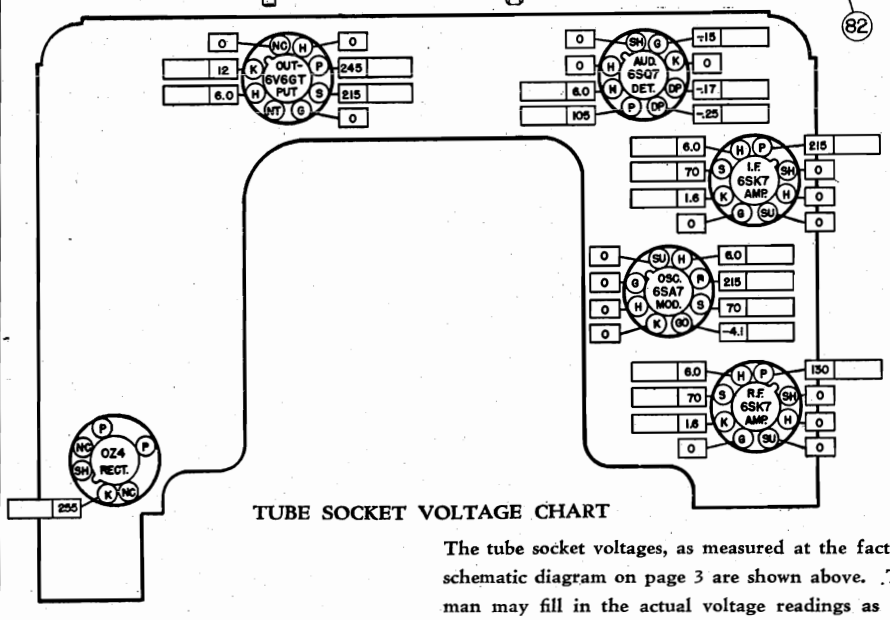

TUBE SOCKET VOLTAGE CHART

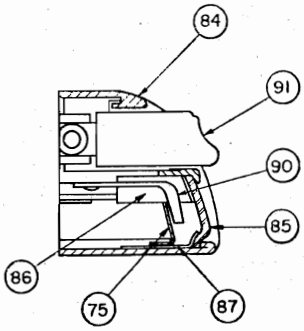

ESCUTCHEON CROSS SECTION

The tube socket voltages, as measured at the factory and under the conditions shown on the schematic diagram on page 3 are shown above. The blank spaces are provided so the service man may fill in the actual voltage readings as taken with his own equipment. A normal operating radio should be used for these measurements.

VOLTMETER RESISTANCE.....OHMS PER VOLT

READINGS TAKEN WITH.....VOLTS AT SPARK PLATE

Voltage measured from socket terminals to chassis and are positive unless marked otherwise.

©John F. Rider

Compliments of www.nucow.com

MODEL 986443,
Chevrolet

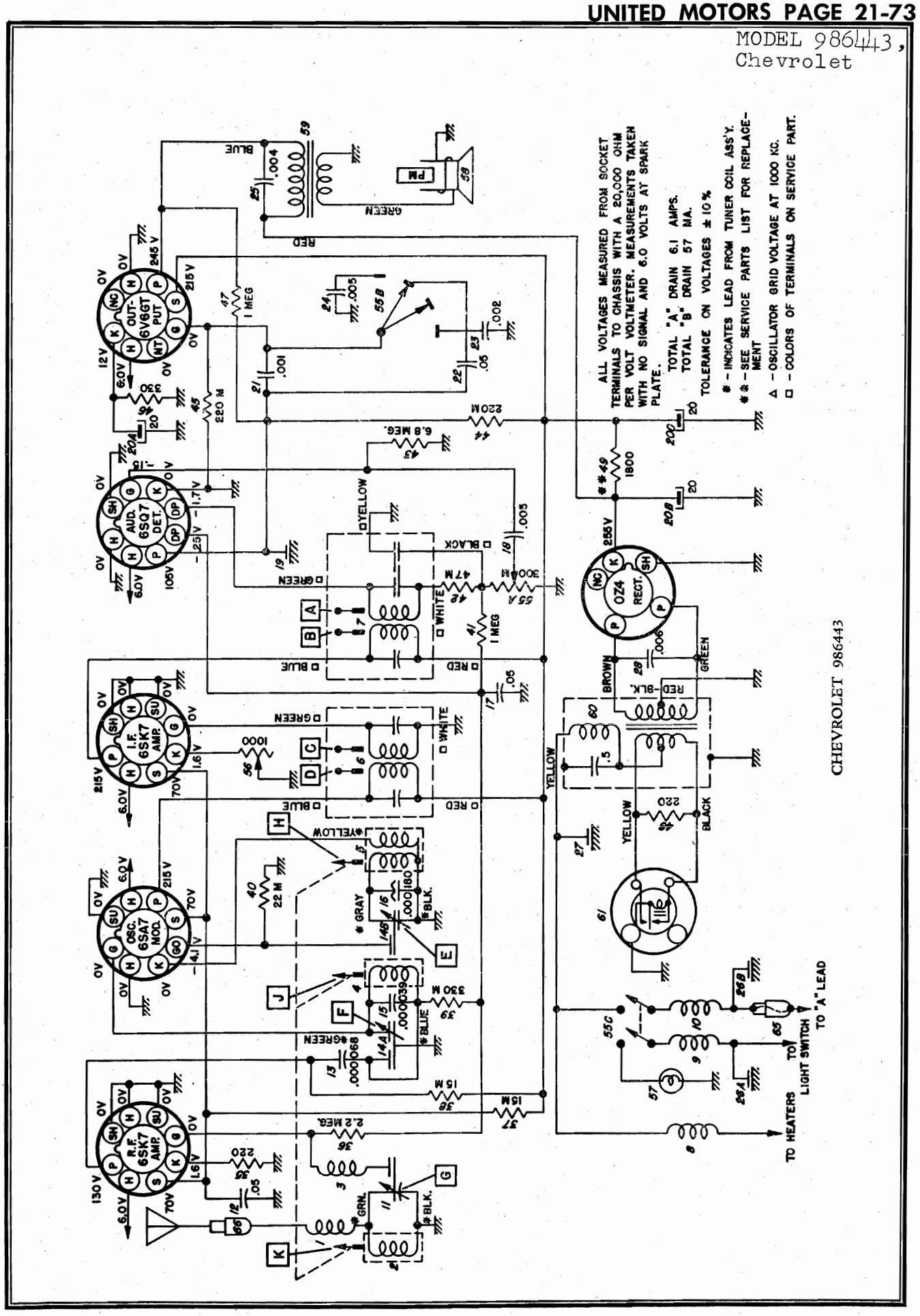

©John F. Rider

Compliments of www.nucow.com

MODEL 986443,
Chevrolet

SERVICE PARTS LIST

Illus. No.	Production Part No.	Service Part No.	Description
			ELECTRICAL PARTS
			Coils
1	7255738	7255738	Antenna Series Choke
2	7258914	7258914	Antenna
3	7240251	7240251	Antenna Spark Choke
4	7258914	7258914	R.F.
5	7258911	7258911	Oscillator
6	7258188	1218725	1st I. F.
7	7258198	1218726	2nd I.F.
8	7255912	7255912	Hash Choke
9	7258554	1217846	"A" Spark Choke
10	7258554	1217846	"A" Spark Choke
			Condensers
11	7257959	7257959	Antenna Trimmer & Brkt.
12	7236841	E-503	.05 mfd. 400V Tubular
13	1219550	G 680	.000068 mfd. Mica
14	7242454	7242454	Dual Trimmer
14A			R.F. Section
14B			Oscillator Section
15	7258221	G 390	.000039 mfd. Mica
16	7257424	7257424	.000180 mfd. Compensating
17	7236842	E 503	.05 mfd. 200V Tubular
18	7230767	E 502	.005 mfd. 600V Tubular
19	1217848	1217848	Chassis Plate Cond.
20	7240724	M 908	Electrolytic
20A			20 mfd. 25V
20B			20 mfd. 400V
20C			20 mfd. 400V
21	7239188	E 102	.001 mfd. 600V Tubular
22	7230892	E 503	.05 mfd. 400V Tubular
23	1219632	E 202	.002 mfd. 600V Tubular
24	7232956	E 502	.005 mfd. 600V Tubular
25	7233243	H 402	.004 mfd. 800V Tubular
26	7258332	1219869	Spark Plate Cond.
26A			Pilot Light Section
26B			"A" Lead Section
27	1217848	1217848	Chassis Plate Cond.
28	7240906	H 602	.006 mfd. 1600V Tubular
			Resistors
35	7237835	A 221	220 ohms ½W Insulated
36	1211147	A 225	2.2 megohms ½W Insulated
37	7233653	C 153	15,000 ohms 2W Insulated
38	7237595	B 153	15,000 ohms 1W Insulated
39	7240732	A 334	330,000 ohms ½W Insulated
40	1214550	A 223	22,000 ohms ½W Insulated
41	7238873	A 105	1 megohm ½W Insulated
42	1214553	A 473	47,000 ohms ½W Insulated
43	7241937	A 685	6.8 megohms ½W Insulated
44	1213479	A 224	220,000 ohms ½W Insulated
45	1213479	A 224	220,000 ohms ½W Insulated
46	7233773	C 331	330 ohms 1W Insulated
47	7238873	A 105	1 megohm ½W Insulated
48	7237994	B 221	220 ohms 1W Insulated
49	1214573	C-272 B-562	1800 ohms 2W wire wound (Replace with 2700 2W and 5600 1W in parallel
			Tubes
	7237751	5229	6SK7
	7237752	5222	6SA7
	1214293	5232	6SQ7GT
	1213793	5241	6V6GT
	1211924	5003	0Z4

©John F. Rider

Compliments of www.nucow.com

MODEL 986443,
Chevrolet

SERVICE PARTS LIST

Illus. No.	Production Part No.	Service Part No.	Description
			Miscellaneous Electrical Parts
55	7256188	7256188	Control - Volume, Tone & Switch
55A			Volume Control
55B			Tone Control
55C			Switch
56	7242204	7242204	Control - Sensitivity
57	125588	55	Lamp - Dial Light
58	7259381	6111	Speaker - 6x9 Elliptical PM
59	7256009	7256009	Transformer - Output
60	7255881	7255881	Transformer - Power
61	7239124	8542	Vibrator
			MECHANICAL PARTS
			Chassis
65	7256250	1217950	"A" Lead & Fuse Holder
66	7256742	7256742	Connector - Antenna
67	1219619	1219619	Socket - Dial Light
	7236279	7236279	Socket - Octal Tube
	7239125	7239125	Socket - Vibrator
			Tuner
75	7255941	7255941	Backplate - Pointer
	147481	147481	Ball Bearings Pkg.
76	7258491	7258491	Bushing & Drive Shaft Assy.
77	7258525	7258525	Manual Drive Shaft Assy.
78	7258072	7258072	Clutch Disc - Driven
79	7258203	7258203	Connecting Link
80	7258211	7258211	Core Guide Bar - Parallel
81	7256271	7256271	Conn. Link - Pointer
82	7255992	7255992	Spring-Conn. Link - Pointer
83	7258468	7258468	Core Assy. - Powdered Iron
84	7259759	7259759	Escutcheon Assy.
85	7259764	7259764	Dial
86	7255940	7255940	Dial Backplate - Upper
87	7256163	7256163	Dial Backplate - Lower
88	7256102	7256102	Gear & Bushing - Clutch
89	7259755	7259755	Gear & Bracket - Worm
	7237172	7237172	Grommet - Osc. Coil Mtg.
	7244021	7244021	Grommet - Ant. - RF Coil Mtg.
	7251168	7251168	Grommet - "A" Lead
90	7256175	7256175	Pointer Assy.
	1219618	1219618	Pointer Tip Pkg.
91	1217837	1217837	Push Button and Slide Assy.
92	7258756	7258756	Spring - Clutch
93	7257415	7257415	Spring - Core Bar Conn. Link
94	7255984	7255984	Spring - Slide Return
			INSTALLATION PARTS
	7257919	7257919	Condenser - Ammeter
	1911095	6030	Condenser - Generator
	1910147	6030	Condenser - Ignition Coil
	1912900	6030	Condenser - Voltage Regulator
	7256098	7256098	Escutcheon - Control Bushing
	147685	147685	Fuse - 14 amps
	7256148	7256148	Knob - Control
	7255935	7255935	Knob - Dummy
	7255936	7255936	Knob - Wing
	7256466	7256466	Spacer - Radio Mtg. - Lower
	7255934	7255934	Spacer - Radio Mtg. - Upper
	494786	6009	Static Collector
	1887829	6003	Suppressor - Distributor
	1888204	1888204	Rubber Nipple

©John F. Rider

Compliments of www.nucow.com

MODEL 2233297

GENERAL

MOUNTING—All 1950 GMC Trucks.

TUBES—Five, plus rectifier.

SPEAKER—6″ x 9″ Elliptical, Permanent Magnet.

TUNING—Manual and 5 P. B. Mechanical.

ANTENNA TRIMMER COMPENSATION—For Antennas Between 0.000058 - 0.000090 Mfd.

TUNING RANGE—550-1600 KC.

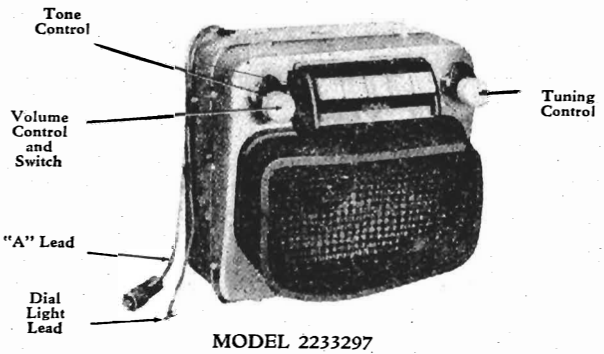

MODEL 2233297

PUSH BUTTON SET-UP PROCEDURE

Pull Push Button left and out. Tune in desired station manually. Push button all the way in.

ALIGNMENT PROCEDURE

Output Meter Connections ..... Across Voice Coil

Generator Return ..... To Receiver Chassis

Dummy Antenna ..... In Series With Generator

Volume Control Position ..... Maximum Volume

Tone Control Position ..... Treble

Generator Output ..... Minimum for Readable Indication

Steps	Series Condenser or Dummy Antenna	Connect Signal Generator to	Signal Generator Frequency	Tune Receiver to	Adjust in Sequence for Max. Output
1	0.1 Mfd.	6SA7 Grid (Pin #8)	260 KC	High Frequency Stop	A, B, C, D
2	0.000068 Mfd.	Antenna Connector	1615 KC	High Frequency Stop	*E, F, G
3	0.000068 Mfd.	Antenna Connector	1000 KC	Signal Generator Signal	J, K
4	0.000068 Mfd.	Antenna Connector	1615 KC	High Frequency Stop	F, G
5	0.000068 Mfd.	Antenna Connector	1000 KC	Signal Generator Signal	L**

*Before making this adjustment check mechanical setting of oscillator core "H." The rear of the core should be $1\frac{25}{32}$″ from the mounting end of the coil form. (This measurement is readily made by inserting a suitable plug in the mounting end of the coil form.) If adjustment is necessary, first dissolve the glyptal seal on the core studs. Core adjustments should be made with an insulated screw driver, and core studs should be cemented in place with glyptal or household cement afrer alignment.

**L is the pointer adjustment screw which is on the connecting link, between the pointer assembly and core guide bar (See tuner Dwg.) It should be adjusted so that when looking directly at the dial the pointer is at the 1100 KC mark. This setting is to give the correct relationship between the pointer and the dial when the radio is installed in a car.

With the radio installed and the car antenna plugged in adjust the antenna trimmer "G" for maximum volume with the radio tuned to a weak station near 1400 KC (see sticker on case).

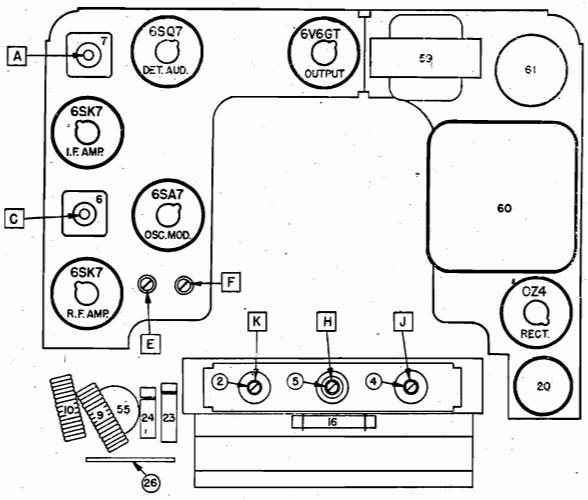

PARTS LAYOUT—TUBE VIEW

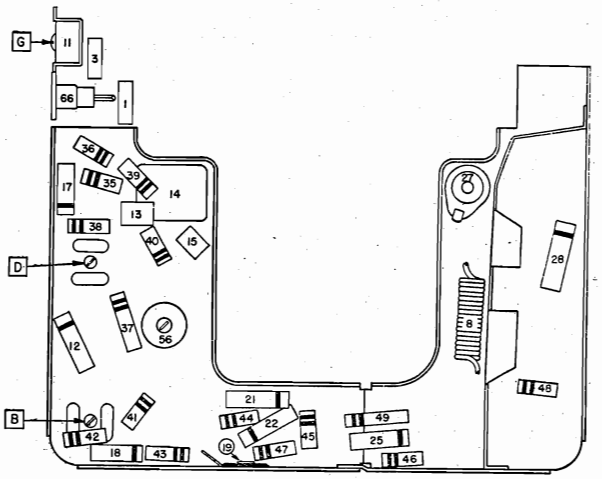

PARTS LAYOUT—CHASSIS VIEW

©John F. Rider

Compliments of www.nucow.com

MODEL 2233297

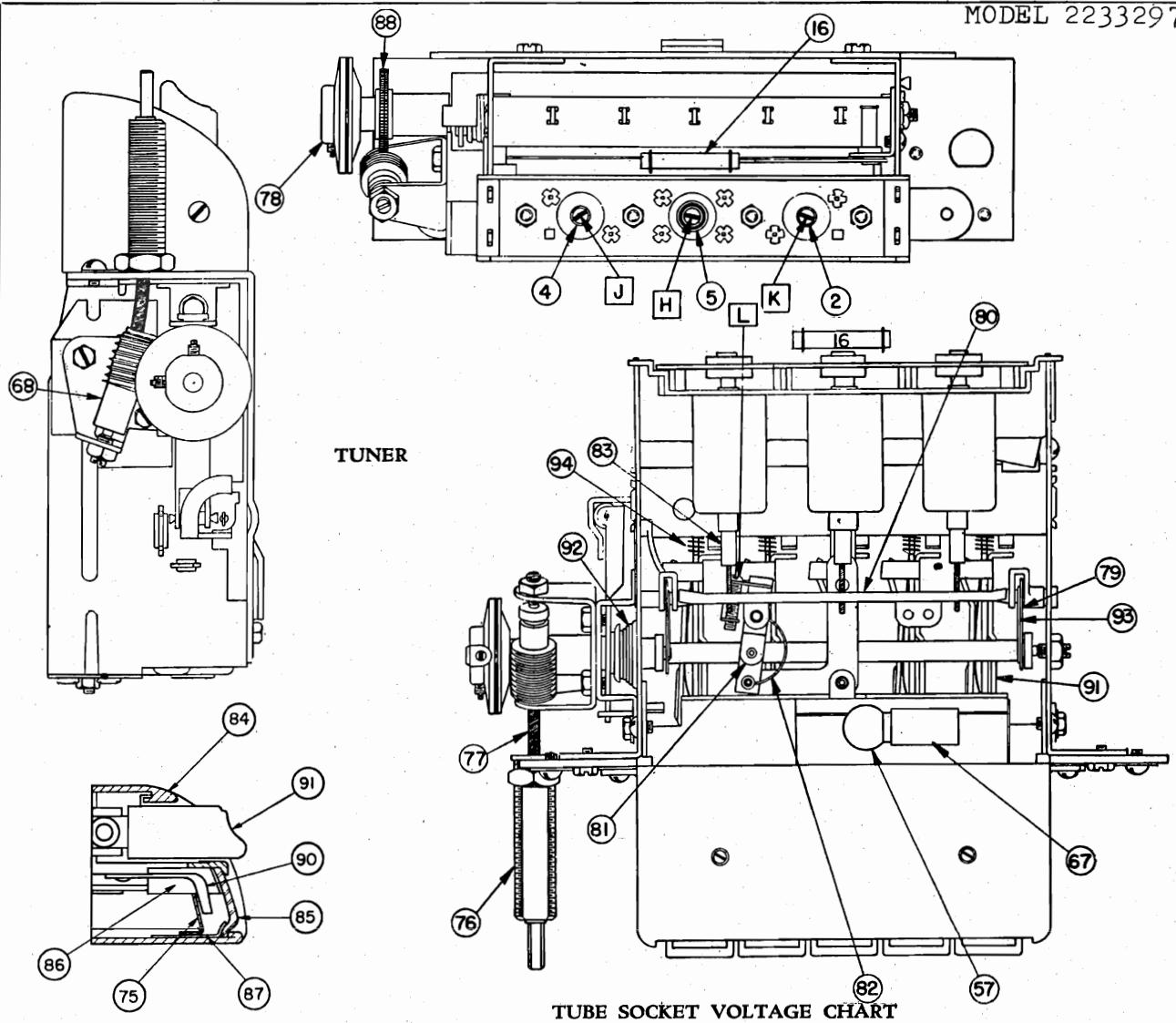

ESCUTCHEON CROSS SECTION

TUBE SOCKET VOLTAGE CHART

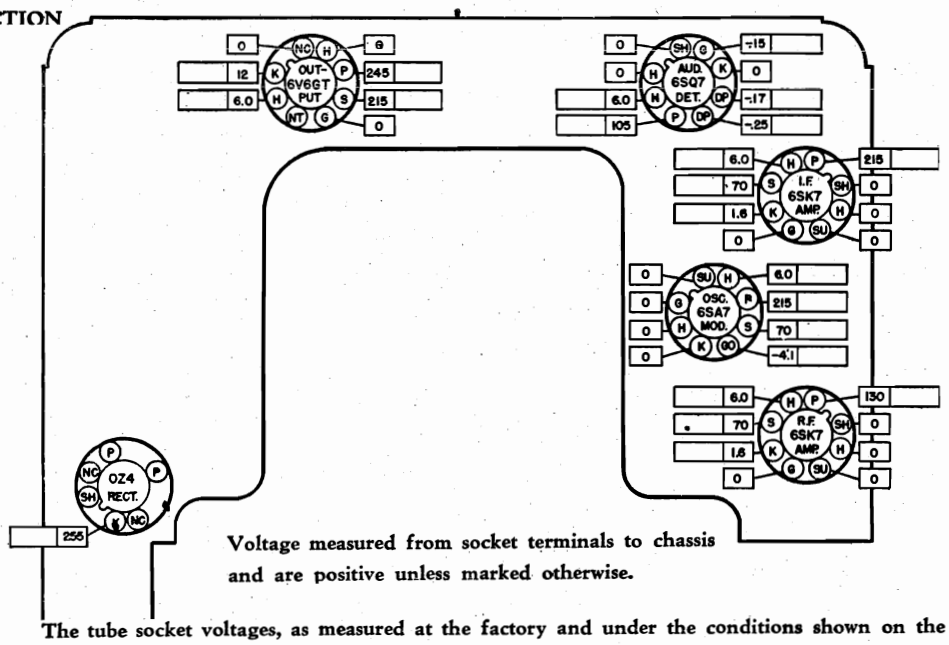

Voltage measured from socket terminals to chassis and are positive unless marked otherwise.

The tube socket voltages, as measured at the factory and under the conditions shown on the schematic diagram on page are shown above. The blank spaces are provided so the service man may fill in the actual voltage readings as taken with his own equipment. A normal operating radio should be used for these measurements.

©John F. Rider

Compliments of www.nucow.com

MODEL 2233297

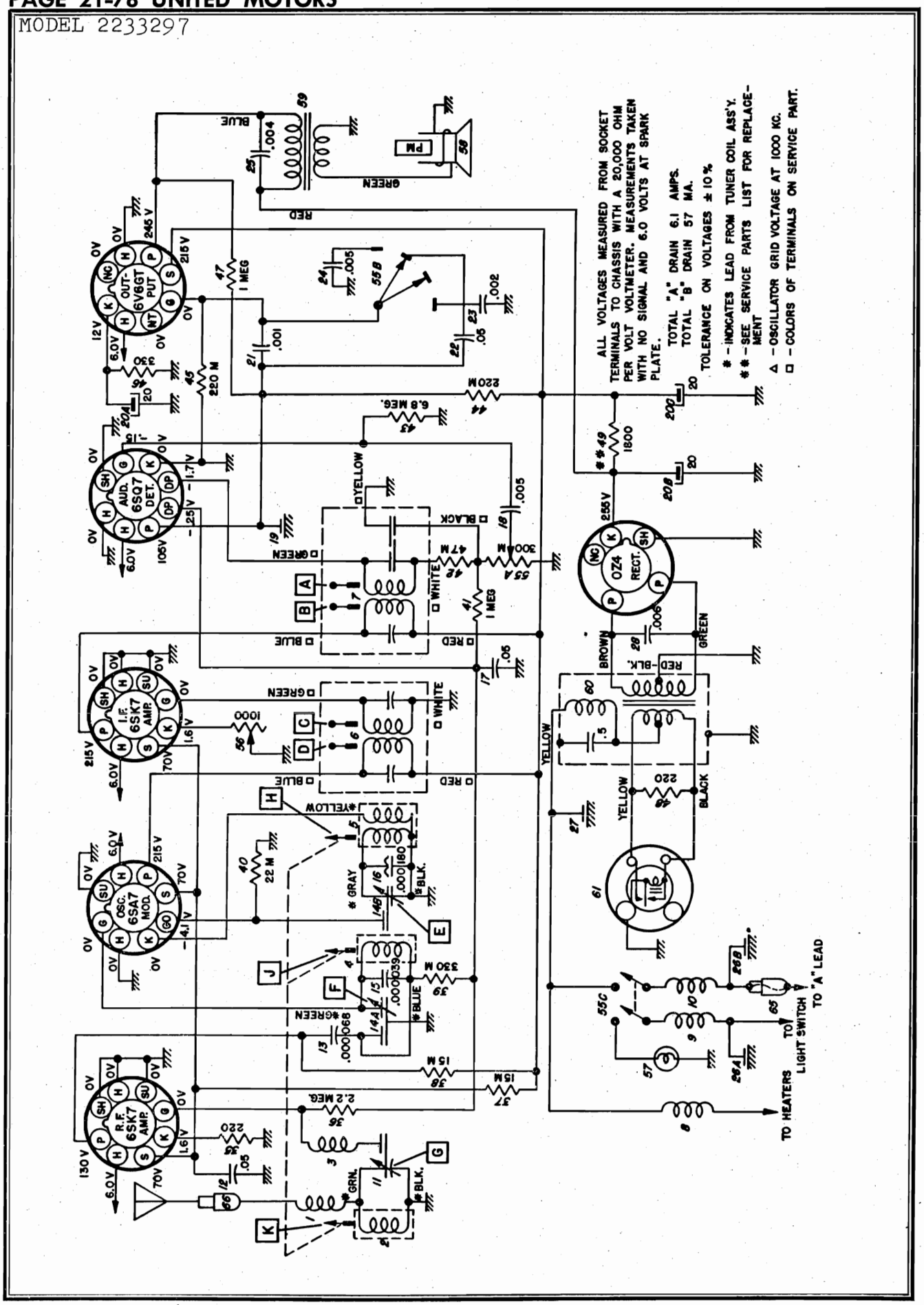

©John F. Rider

Compliments of www.nucow.com

MODEL 2233297

SERVICE PARTS LIST

Illus. No.	Production Part No.	Service Part No.	Description
			ELECTRICAL PARTS
			Coils
1	7255738	7255738	Antenna Series Choke
2	7258914	7258914	Antenna
3	7240251	7240251	Antenna Spark Choke
4	7258914	7258914	R.F.
5	7258911	7258911	Oscillator
6	7258188	1218725	1st I.F.
7	7258198	1218726	2nd I.F.
8	7255912	7241708	Hash Choke
9	7258554	1217846	"A" Spark Choke
10	7258554	1217846	"A" Spark Choke
			Condensers
11	7257959	7257959	Antenna Trimmer & Brkt.
12	7236841	E-503	.05 mfd. 400V Tubular
13	1219550	G 680	.000068 mfd. Mica
14	7242454	7242454	Dual Trimmer
14A			R.F. Section
14B			Oscillator Section
15	7258221	G 390	.000039 mfd. Mica
16	7257424	7257424	.000180 mfd. Compensating
17	7236842	E 503	.05 mfd. 200V Tubular
18	7230767	E 502	.005 mfd. 600V Tubular
19	1217848	1217848	Chassis Plate Cond.
20	7240724	M 908	Electrolytic
20A			20 mfd. 25V
20B			20 mfd. 400V
20C			20 mfd. 400V
21	7239188	E 102	.001 mfd. 600V Tubular
22	7230892	E 503	.05 mfd. 400V Tubular
23	1219632	E 202	.002 mfd. 600V Tubular
24	7232956	E 502	.005 mfd. 600V Tubular
25	7233243	H 402	.004 mfd. 800V Tubular
26	7258332	1219369	Spark Plate Cond.
26A			Pilot Light Section
26B			"A" Lead Section
27	1217848	1217848	Chassis Plate Cond.
28	7240906	H 602	.006 mfd. 1600V Tubular
			Resistors
35	7237835	A 221	220 ohms ½W Insulated
36	1211147	A 225	2.2 megohms ½W Insulated
37	7233653	C 153	15,000 ohms 2W Insulated
38	7237595	B 153	15,000 ohms 1W Insulated
39	7240732	A 334	330,000 ohms ½W Insulated
40	1214550	A 223	22,000 ohms ½W Insulated
41	7238873	A 105	1 megohm ½W Insulated
42	1214553	A 473	47,000 ohms ½W Insulated
43	7241937	A 685	6.8 megohms ½W Insulated
44	1213479	A 224	220,000 ohms ½W Insulated
45	1213479	A 224	220,000 ohms ½W Insulated
46	7233773	B 331	330 ohms 1W Insulated
47	7238873	A 105	1 megohm ½W Insulated
48	7237994	B 221	220 ohms 1W Insulated
49	1214573	C-272 B-562	1800 ohms (Replace with 2700 2W and 5600 1W in parallel)
			Tubes
	7237751	5229	6SK7
	7237752	5222	6SA7
	1214293	5232	6SQ7GT
	1213793	5241	6V6GT
	1211924	5003	0Z4

©John F. Rider

Compliments of www.nucow.com

MODEL 2233297

SERVICE PARTS LIST

Illus. No.	Production Part No.	Service Part No.	Description
			Miscellaneous Electrical Parts
55	7256188	7256188	Control - Volume, Tone & Switch
55A			Volume Control
55B			Tone Control
55C			Switch
56	7242204	7242204	Control - Sensitivity
57	125588	55	Lamp - Dial Light
58	7259381	7259381	Speaker - 6x9 Elliptical PM
59	7256009	7256009	Transformer - Output
60	7255881	7255881	Transformer - Power
61	7239124	8542	Vibrator
			MECHANICAL PARTS
			Chassis
65	7256250	1217950	"A" Lead & Fuse Holder
66	7256742	7256742	Connector - Antenna
67	1219619	1219619	Socket - Dial Light
	7236279	7236279	Socket - Octal Tube
	7239125	7239125	Socket - Vibrator
			Tuner
75	7255941	7255941	Backplate - Pointer
	147481	147481	Ball Bearings Pkg.
76	7258491	7258491	Bushing & Drive Shaft Assy.
77	7258525	7258525	Manual Drive Shaft Assy.
78	7258072	7258072	Clutch Disc - Driven
79	7258203	7258203	Connecting Link
80	7258211	7258211	Core Guide Bar - Parallel
81	7256271	7256271	Conn. Link - Pointer
82	7255992	7255992	Spring-Conn. Link - Pointer
83	7258468	7258468	Core Assy. - Powdered Iron
84	7259798	7259798	Escutcheon Assy.
85	7259799	7259799	Dial
86	7255940	7255940	Dial Backplate - Upper
87	7256163	7256163	Dial Backplate - Lower
88	7256102	7256102	Gear & Bushing - Clutch
89	7259755	7259755	Gear & Bracket - Worm
	7237172	7237172	Grommet - Osc. Coil Mtg.
	7244021	7244021	Grommet - Ant. - RF Coil Mtg.
	7251168	7251168	Grommet - "A" Lead
90	7256175	7256175	Pointer Assy.
	1219618	1219618	Pointer Tip Pkg.
91	1217837	1217837	Push Button and Slide Assy.
92	7258756	7258756	Spring - Clutch
93	7257415	7257415	Spring - Core Bar Conn. Link
94	7255984	7255984	Spring - Slide Return
			INSTALLATION PARTS
	7257919	7257919	Condenser - Ammeter
	1911095	6030	Condenser - Generator
	1910147	6030	Condenser - Ignition Coil
	1912900	6030	Condenser - Voltage Regulator
	7256098	7256098	Escutcheon - Control Bushing
	147685	147685	Fuse - 14 amps
	7256148	7256148	Knob - Control
	7255935	7255935	Knob - Dummy
	7255936	7255936	Knob - Wing
	7256466	7256466	Spacer - Radio Mtg. - Lower
	7255934	7255934	Spacer - Radio Mtg. - Upper
	494786	6009	Static Collector
	1887829	6003	Suppressor - Distributor
	1888204	1888204	Rubber Nipple

©John F. Rider

Compliments of www.nucow.com

MODEL 7258755,
Cadillac

GENERAL

MOUNTING—All 1950 Cadillac Cars.

TUBES—Seven, Plus Rectifier.

SPEAKER — 6" x 9" Elliptical, Permanent Magnet.

TUNING—Manual and 5 P.B. Mechanical.

ANTENNA TRIMMER COMPENSATION — 0.000060 - 0.000085 Mfd.

TUNING RANGE—550-1600 KC.

PUSHBUTTON SET-UP

Pull pushbutton to the right and out. Tune in desired station manually. Push button all the way in.

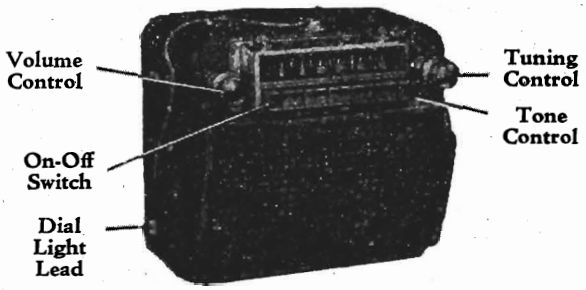

MODEL 7258755

ALIGNMENT PROCEDURE:

Output Meter Connection ..... Across Voice Coil

Signal Generator Return ..... To Chassis

Dummy Antenna ..... In Series With Generator

Volume Control ..... Maximum Volume

Tone Control ..... Treble

Generator Output ..... Minimum for Readable Indication

Steps	Series Condenser or Dummy Antenna	Connect To	Signal Generator Frequency	Tune Receiver To	Adjust in Sequence for Max. Output
1	0.1 Mfd.	6SA7 Grid (Pin #8)	260 KC	High Freq. Stop	A, B, C, D
2	0.000068 Mfd.	Antenna Connector	1615 KC	High Freq. Stop	*E, F, G
3	0.000068 Mfd.	Antenna Connector	1430 KC	Signal Gen. Signal	J, K
4	0.000068 Mfd.	Antenna Connector	1615 KC	High Freq. Stop	F, G
5	0.000068 Mfd.	Antenna Connector	1000 KC	Signal Gen. Signal	L**

*Before making this adjustment check the mechanical setting of the oscillator core "H." The slotted end of the core should be 1 25/32" from the mounting end of the coil form. (This measurement is readily made by inserting a suitable plug in the mounting end of the coil form). If adjustment is necessary, be sure to first dissolve the glyptal seal on the core studs. Core adjustments are made from the mounting end of the coil form with an insulated screwdriver, and core studs should be re-sealed with glyptal or household cement after alignment.

**"L" is the pointer adjustment screw on the pointer connecting link (See tuner drawing). Adjust so pointer reads 1000 KC (on the "10" calibration mark).

With the radio installed and the car antenna plugged in adjust antenna trimmer "G" (See sticker on case) for maximum volume with the radio tuned to a weak station near 1400 KC.

©John F. Rider

Compliments of www.nucow.com

MODEL 7258755,
Cadillac

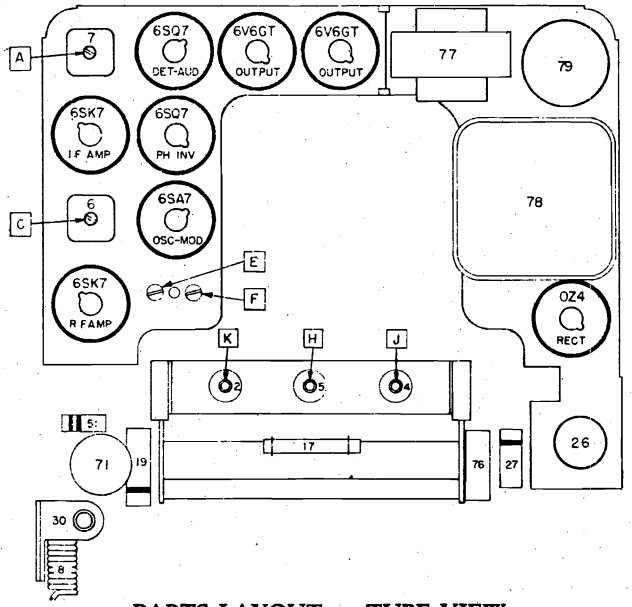

PARTS LAYOUT — TUBE VIEW

TUBE SOCKET VOLTAGE CHART

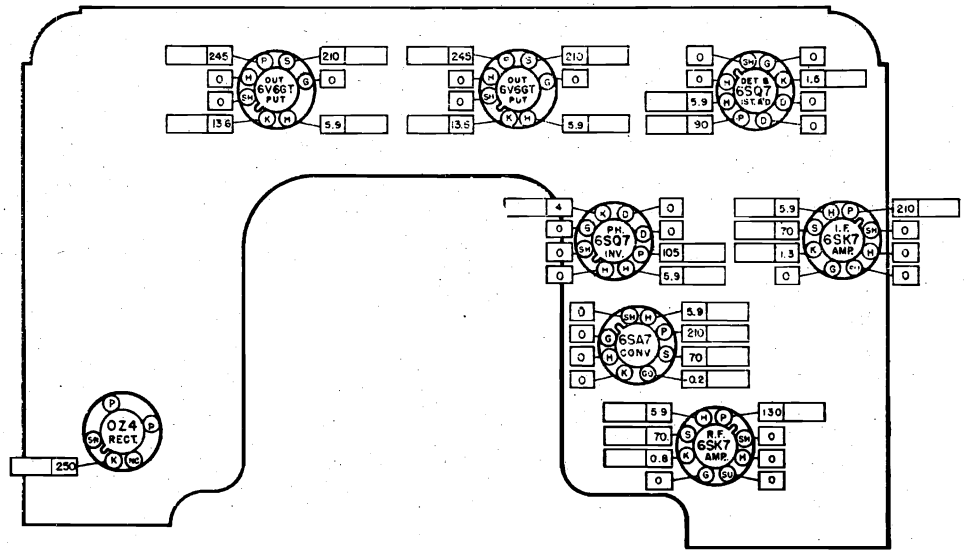

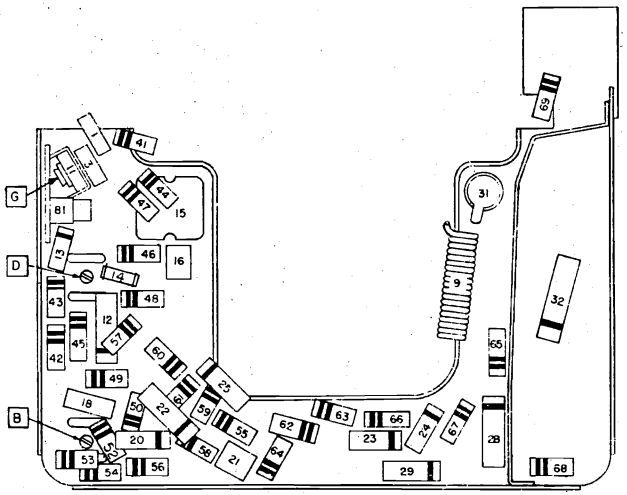

PARTS LAYOUT — CHASSIS VIEW

The tube socket voltages, as measured at the factory and under the conditions shown on the schematic diagram, are shown above. The blank spaces are provided so that the serviceman may fill in actual voltage readings as taken with his own equipment. A normal operating radio should be used for these measurements.

Voltmeter resistance.....Ohms Per Volt.

Readings taken with.....Volts at Spark Plate.

All voltages measured from socket terminals to chassis.

©John F. Rider

Compliments of www.nucow.com

MODEL 7258755,
Cadillac

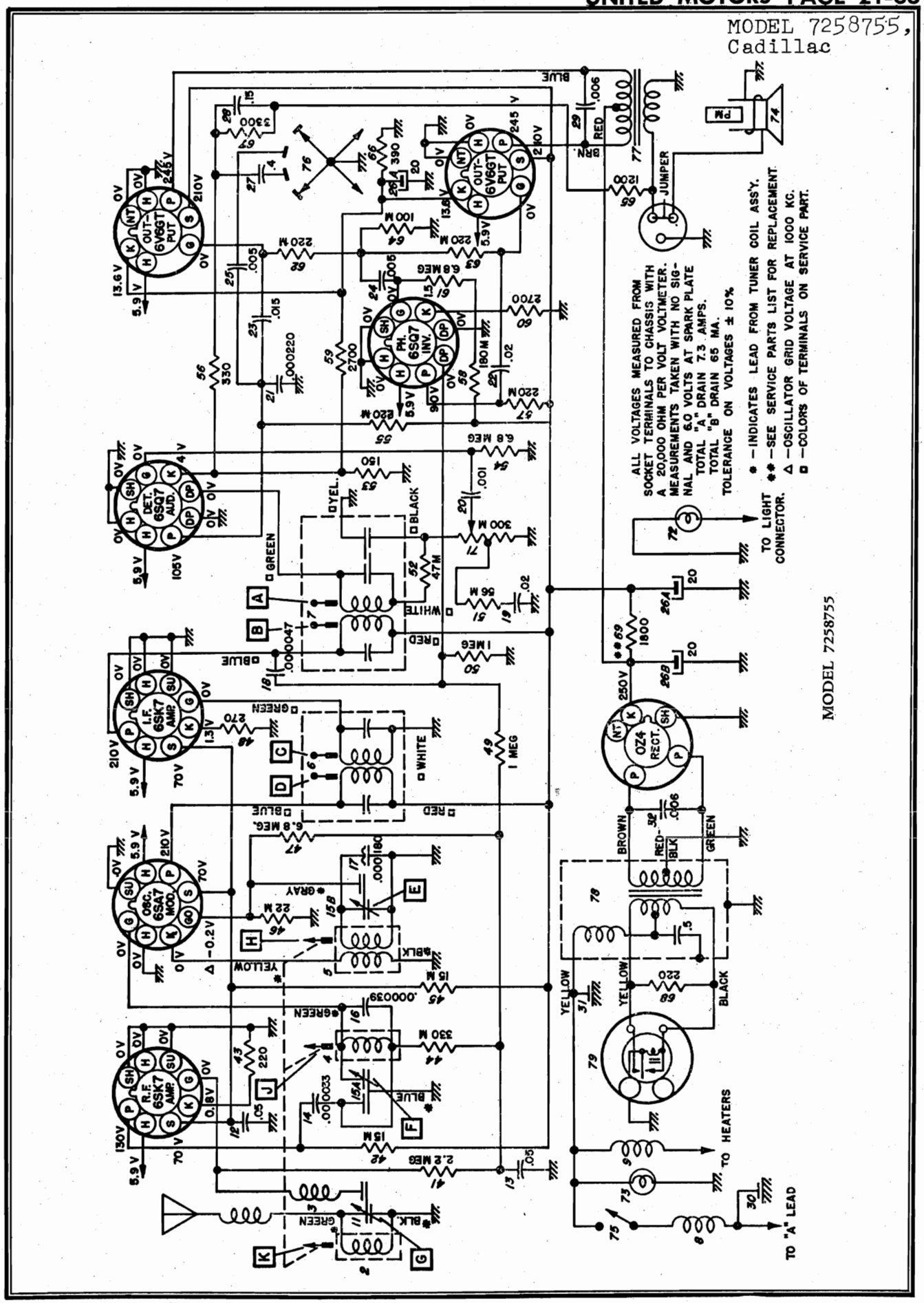

©John F. Rider

Compliments of www.nucow.com

MODEL 7258755,
Cadillac

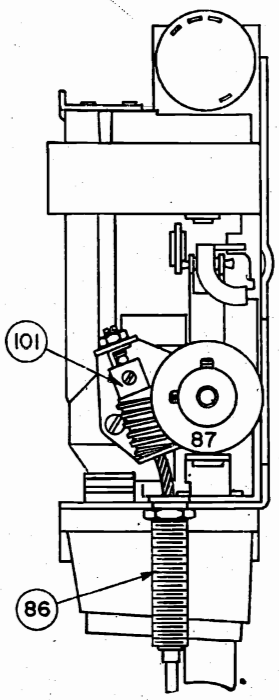

TUNER

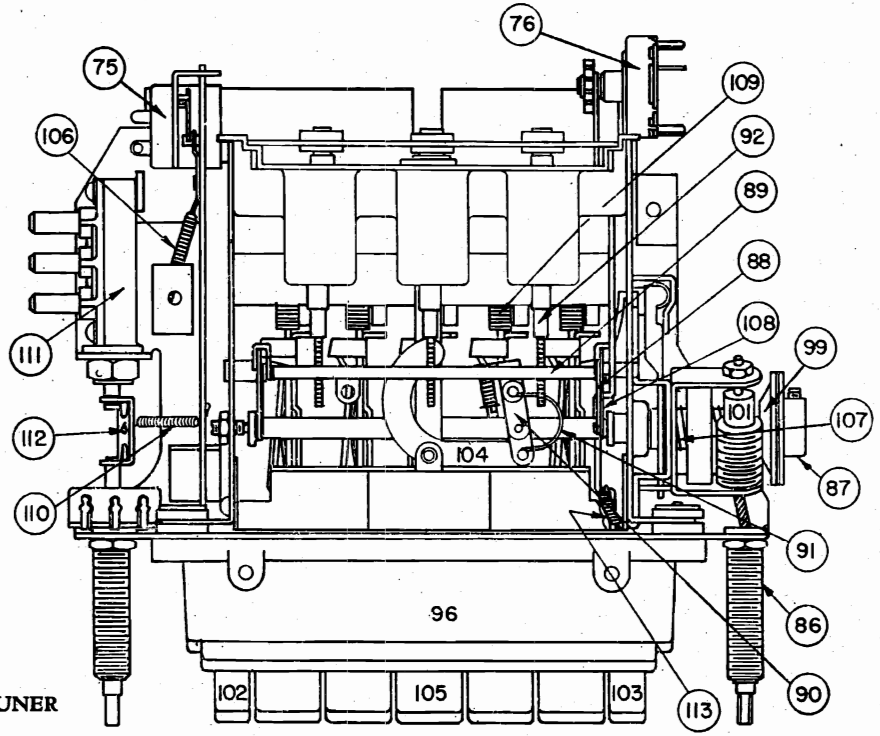

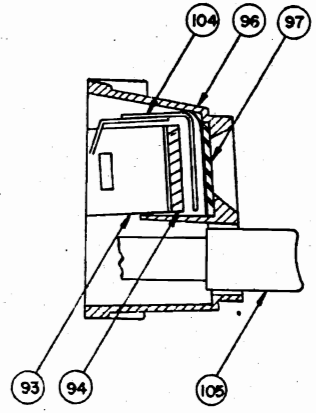

ESCUTCHEON CROSS SECTION

SERVICE PARTS LIST

Illus. No	Production Part No.	Service Part No.	Description
			ELECTRICAL PARTS
			Coils
1	7255738	7255738	Antenna Series Choke
2	7258914	7258914	Antenna
3	7240251	7240251	Antenna Spark Choke
4	7258914	7258914	R.F.
5	7258911	7258911	Oscillator
6	7258849	1219508	1st I.F.
7	7258850	1219509	2nd I.F.
8	1217846	1217846	"A" Spark Plate
9	1217846	1217846	Hash Choke
			Condensers
11	7258226	7258226	Antenna Trimmer
12	7258125	E 503	.05 Mfd 400 V Tubular
13	1210697	E 503	.05 Mfd 200 V Tubular
14	1218348	G 330	.000033 Mfd Ceramic
15	7242454	7242454	Dual Trimmer
15A			R.F. Section
15B			Oscillator
16	7258221	G 390	.000039 Mfd Ceramic
17	7257424	7257424	.000180 Mfd Compensating
18	1218202	G 470	.000047 Mfd Ceramic
19	7237720	E 203	.02 Mfd 400 V Tubular
20	1218883	E 102	.001 Mfd 600 V Tubular
21	1218886	G 221	.000220 Mfd Ceramic
22	7233770	E 203	.02 Mfd 600 V Tubular
23	7237719	7237719	.015 Mfd 600 V Tubular
24	7232956	E 502	.005 Mfd 600 V Tubular
25	7230767	E 502	.005 Mfd 600 V Tubular
26	7240724	M 908	Electrolytic
26A			20 Mfd 25 V
26B			20 Mfd 400 V
26C			20 Mfd 400 V
27	1218882	1218882	.4 Mfd 100 V Tubular
28	1218880	1218880	.15 Mfd 100 V Tubular
29	7240906	H 602	.006 Mfd 600 V Tubular
30	7240797	7240797	Spark Plate and Choke Assy.
31	1217848	1217848	Chassis Plate Assy.

©John F. Rider

Compliments of www.nucow.com

MODEL 7258755,
Cadillac

SERVICE PARTS LIST

Illus. No	Production Part No.	Service Part No.	Description
			Tubes
	7237751	5229	6SK7
	7237752	5222	6SA7
	7237753	5231	6SQ7
	1213793	5241	6V6GT
	1211924	5003	0Z4
			Miscellaneous Electrical
71	7258954	7258954	Control - Volume
72	125588	55	Lamp - Dial Light
73	187189	187189	Lamp - Pilot Light
74	7258488	7258488	Speaker - 6 x 9 Elliptical P.M.
75	7242411	7242411	Switch - "On - Off"
76	7258273	7258273	Switch - Tone Control
77	7258390	7258390	Transformer - Output
78	7255881	7255881	Transformer - Power
79	7239124	8542	Vibrator - Non-synchronous
			MECHANICAL PARTS
			Chassis
81	7239475	7239475	Socket - Antenna
82	1219106	1219106	Socket - Dial Light
	7236279	7236279	Socket - Octal Tube
	7239125	7239125	Socket - Vibrator
			Tuner
86	7258957	7258957	Bushing and Manual Drive Shaft
87	7258072	7258072	Clutch Disc-Driven
88	7258203	7258203	Connecting Link - Core Bar
89	7258206	7258206	Core Guide Bar - Parallel
90	7256271	7256271	Pointer Connecting Link
91	7255992	7255992	Spring - Pointer Connecting Link
92	7258468	7258468	Core - Powdered Iron
93	1219105	1219105	Dial Backplate Assy.
94	7258254	7258254	Dial - Calibration
95	7258239	7258239	Dial - Retainer Spring
96	7258270	7258270	Escutcheon
97	7258236	7258236	Dial Glass
98	7258232	7258232	Dial Retainer
99	7256760	7256760	Gear and Bushing
101	7256758	7256758	Gear and Bracket - Worm
102	7258757	7258757	Plunger and Button - "On - Off"
103	1219138	1219138	Plunger and Button - Tone Control
104	7258269	7258269	Pointer Assy.
105	1219104	1219104	Push Button and Slide Assy.
106	7257361	7257361	Spring - Toggle Lever
107	7258756	7258756	Spring - Clutch
108	7257415	7257415	Spring - Core Bar Connecting Link
109	7255984	7255984	Spring - Slide Return
113	7258786	7258786	Spring - Tone Control
110	7258731	7258731	Spring - Yoke
111	7258260	7258260	Vacuum Valve
112	7258229	7258229	Vacuum Valve Drive Yoke
			INSTALLATION PARTS
	7258542	7258542	"A" Lead and Fuse Connector
	1911095	6030	Capacitor - Generator
	1910147	6030	Capacitor - Ignition Coil
	147685	147685	Fuse - 14 amps
	7240138	6013	Static Collector
	1456932	1456932	Knob - Dummy
	7259369	7259369	Knob - Control
			Resistors
41	1211147	A 225	2.2 Megohms ½ W Insulated
42	7237595	B 153	15,000 Ohms 1 W Insulated
43	7237835	A 221	220 Ohms ½ W Insulated
44	7240732	A 334	330,000 Ohms ½ W Insulated
45	7233653	C 153	15,000 Ohms 2 W Insulated
46	1211192	A 223	22,000 Ohms ½ W Insulated
47	1215563	A 685	6.8 Megohms ½ W Insulated
48	1214542	A 271	270 Ohms ½ W Insulated
49	7238873	A 105	1 Megohm ½ W Insulated
50	7238873	A 105	1 Megohm ½ W Insulated
51	1213267	A 563	56,000 Ohms ½ W Insulated
52	7240731	A 473	47,000 Ohms ½ W Insulated
53	1213220	A 151	150 Ohms ½ W Insulated
54	7241937	A 685	6.8 Megohms ½ W Insulated
55	1214555	A 224	220,000 Ohms ½ W Insulated
56	1213224	A 331	330 Ohms ½ W Insulated
57	1214555	A 224	220,000 Ohms ½ W Insulated
58	1215560	1215560	180,000 Ohms ½ W Insulated
59	1213240	1213240	2,700 Ohms ½ W Insulated
60	1213240	1213240	2,700 Ohms ½ W Insulated
61	7241937	A 685	6.8 Megohms ½ W Insulated
62	1214555	A 224	220,000 Ohms ½ W Insulated
63	1214555	A-224	220,000 Ohms ½ W Insulated
64	1213270	A 104	100,000 Ohms ½ W Insulated
65	1213236	1213236	1200 Ohms ½ W Insulated
66	1216149	B 391	390 Ohms 1 W Insulated
67	1213481	A 332	3,300 Ohms ½ W Insulated
68	7237994	B 221	220 Ohms 1 W Insulated
69	1214573	C 272 / B 562	1800 Ohms 2 W Wire Wound (or Replace with 2700 Ohms 2 W and 5600 Ohms 1 W in Parallel)

©John F. Rider

Compliments of www.nucow.com

MODEL 7258865,
Cadillac

GENERAL

MOUNTING—All 1950 Cadillac Cars.

TUBES—Eight, Plus Rectifier.

SPEAKER — 6" x 9" Elliptical, Permanent Magnet.

TUNING—Electronic.

ANTENNA TRIMMER COMPENSATION — 0.000060 - 0.000085 Mfd.

TUNING RANGE—540 - 1600 KC.

PUSHBUTTON SET-UP

No pushbutton set-up is necessary. However, the number of stations on which the tuner will stop can be controlled by the use of the Sensitivity Control.

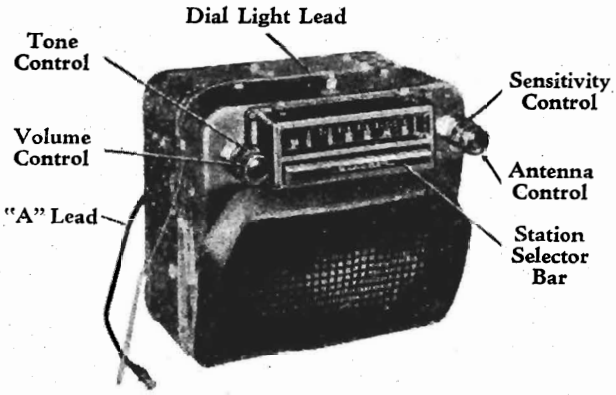

MODEL 7258865

SIGNAL SEEKING TUNER ALIGNMENT PROCEDURE:

NOTE: When aligning the signal seeker tuner type radio, be sure to use a vacuum tube voltmeter as indicated and be sure to follow the alignment sequence given—(Notice that the primary of the 2nd I.F. is aligned first.)

Output Meter Connection ..... VTVM From [2] To Chassis (see parts layout page 2)
Generator Return ..... Receiver Chassis
Dummy Antenna ..... In Series With Generator
Volume Control ..... Maximum Volume
Sensitivity Control ..... Maximum Sensitivity
Tone Control ..... Treble
Generator Output ..... Not To Exceed 2 Volts at VTVM

Step	Dummy Antenna	Connect To	Signal Generator Frequency	Tune Receiver To	Adjust in Sequence for Max. Output
1	0.1 mfd	6SA7 Grid (Pin 8)	260 KC	*High Frequency Stop	A, B, C, D
2	0.000068 mfd	Antenna Connector	1615 KC	High Frequency Stop	**E, F, G
3	0.000068 mfd	Antenna Connector	600 KC	Signal Gen. Signal	J, K
4	0.000068 mfd	Antenna Connector	1615 KC	Signal Gen. Signal	F, G
5	0.000068 mfd	Antenna Connector	1000 KC	Signal Gen. Signal	***L

*To tune to high frequency, put a 0.070" feeler gauge (or bare #13 wire) in slot against the high frequency stop. (See tuner picture). Depress station selector bar and allow the planetary arm to run against the feeler gauge. Turn the radio off and then on.

**Before making this adjustment, check the setting of oscillator core "H." The rear of the core should be $1\frac{25}{32}$" from the mounting end of the coil form. This measurement is readily made by inserting a suitable plug in the mounting end of the coil form. The core adjustment is made from the mounting end of the coil form with an insulated screwdriver. (It will be necessary to steady the core guide bar by applying a downward pressure at the antenna core end of the bar while making these adjustments.) If this adjustment is necessary, first dissolve the glyptal seal on the core stud and be sure to re-seal after making the adjustment.

***"L" is the pointer adjustment screw on the end of the core guide bar—adjust so pointer reads 1000 KC.

With the radio installed and the antenna plugged in, adjust antenna trimmer "G" (See sticker on case) for maximum volume with the radio tuned to a weak station near 1400 KC.

©John F. Rider

Compliments of www.nucow.com

MODEL 7258865,
Cadillac

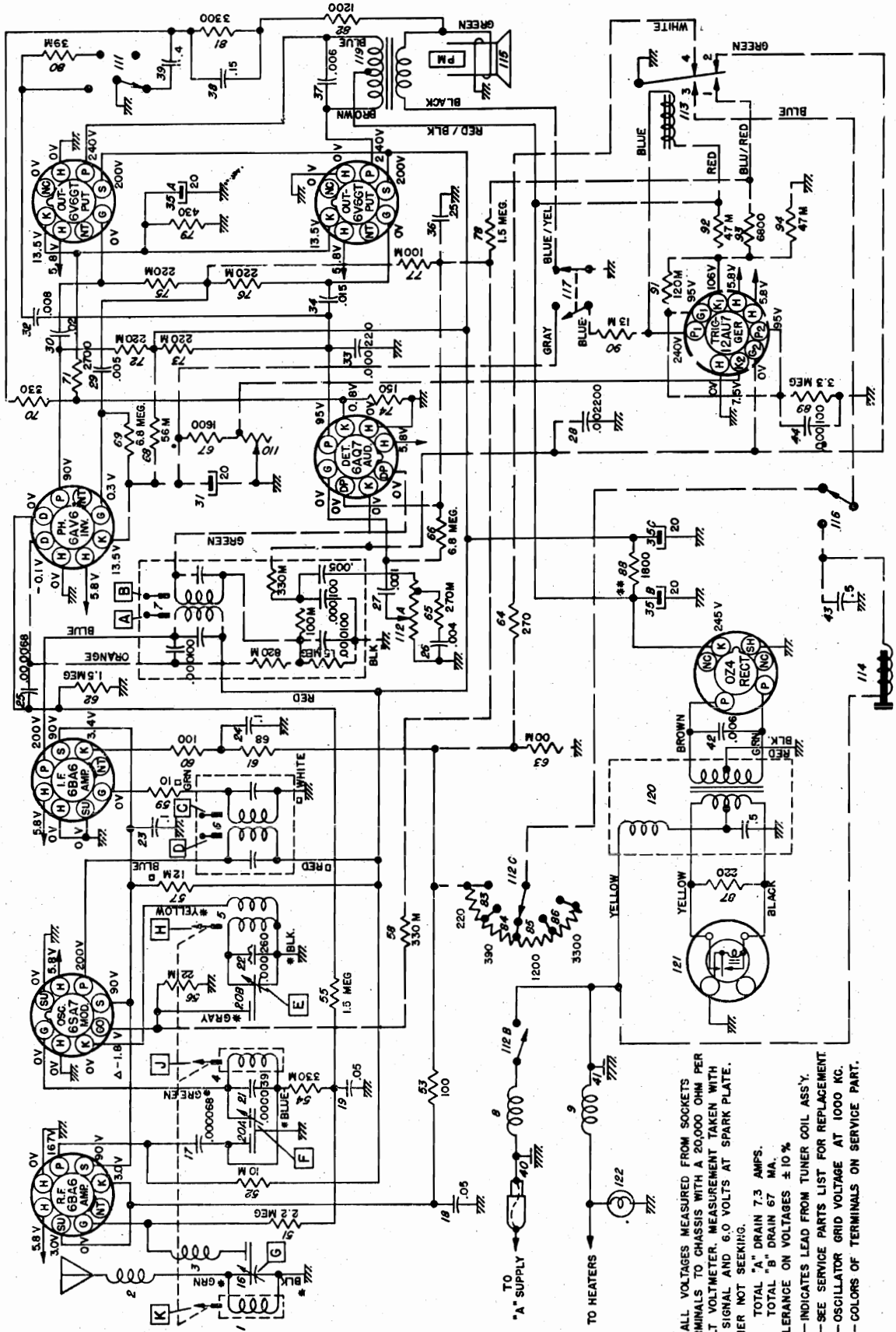

MODEL 7258865

——TUNER CIRCUIT COMPONENTS

©John F. Rider

Compliments of www.nucow.com

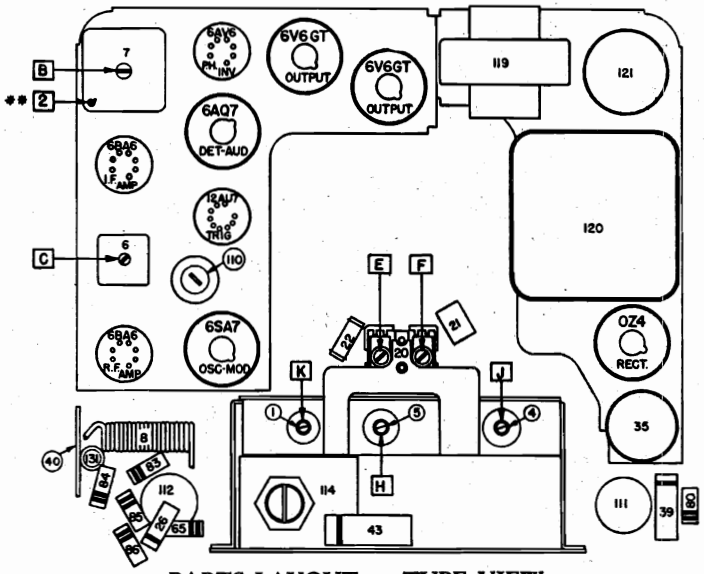

PARTS LAYOUT — TUBE VIEW

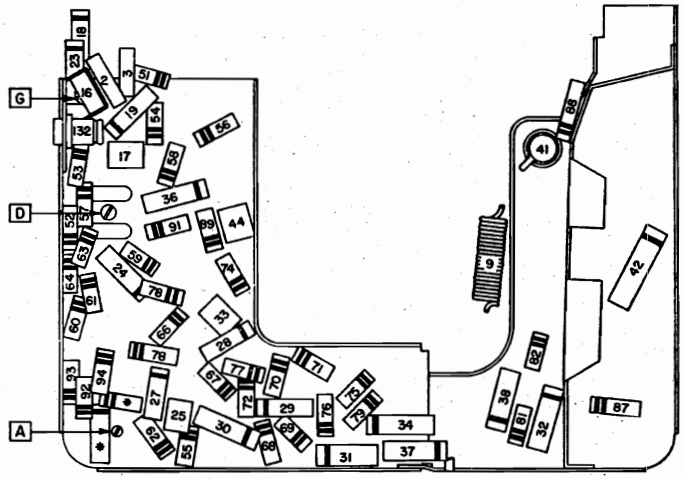

PARTS LAYOUT — CHASSIS VIEW

*Condenser and resistor are included in the 2nd I.F. Coil Assembly.

**Connect a VTVM from this point to ground for output indications during alignment.

TUBE SOCKET VOLTAGE CHART

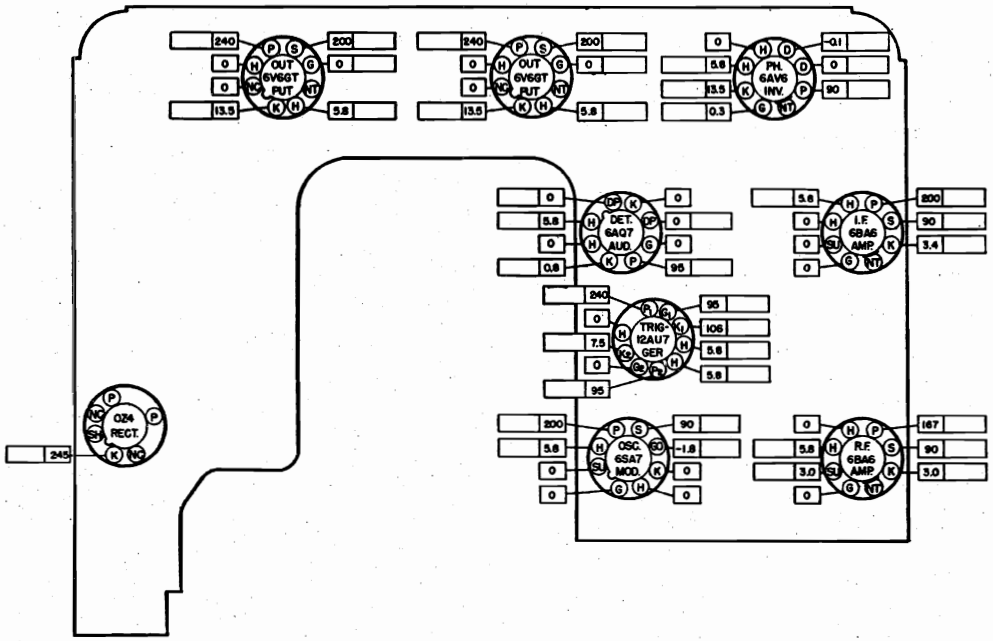

The tube socket voltages, as measured at the factory and under the conditions shown on the schematic diagram, are shown above. The blank spaces are provided so that the serviceman may fill in actual voltage readings as taken with his own equipment. A normal operating radio should be used for these measurements.

Voltmeter resistance.....Ohms Per Volt.

Readings taken with.....Volts At Spark Plate.

All voltages measured from socket terminals to chassis.

TUNER ADJUSTMENT PROCEDURE:

CATHODE DELAY ADJUSTOR (Illustration #110) (This adjustment should be necessary only if the delay adjustor has been replaced or the adjustment has definitely been proven to be faulty).

With exactly 6.0 volts on the spark plate, set the delay adjustor (Illus. 110) so that the voltage at K_2 of the 12AU7 trigger tube (Pin #8) is exactly 7.5 volts.

NOTE: For all other tuner adjustments, see Bulletin 6D-620.

©John F. Rider

Compliments of www.nucow.com

MODEL 7258865, Cadillac

L

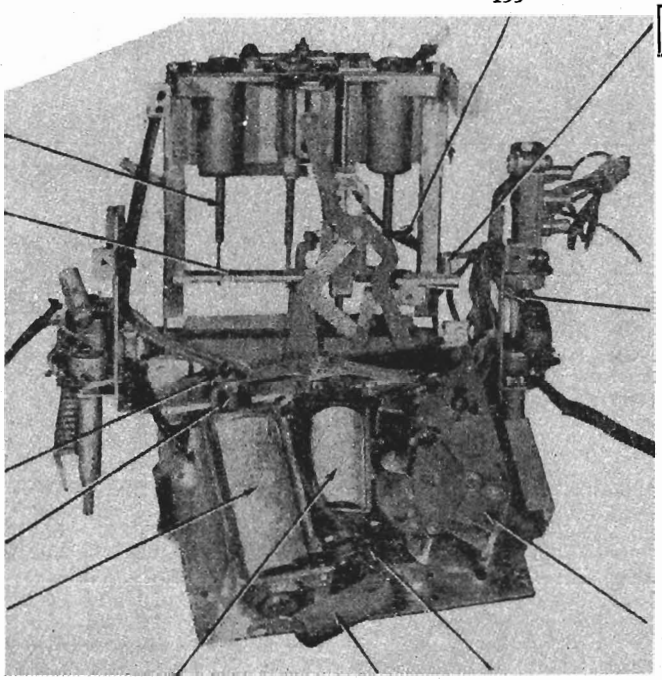

TUNER — OPEN

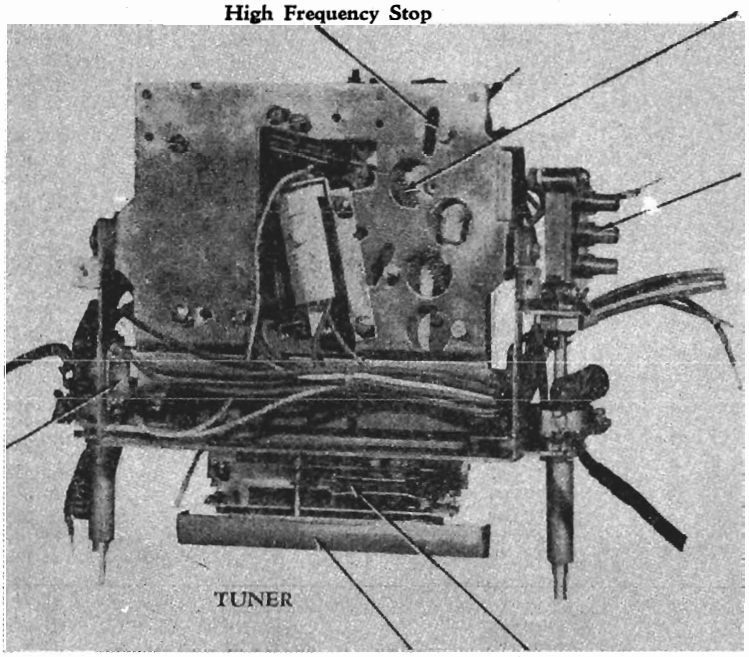

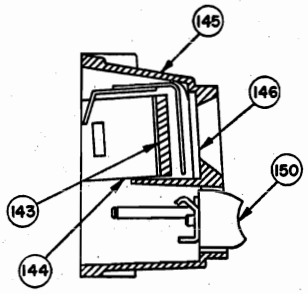

ESCUTCHEON CROSS-SECTION

SERVICE PARTS LIST

Illus. No.	Production Part No.	Service Part No.	Description
		ELECTRICAL PARTS	
		Coils	
1	7257979	7257979	Antenna
2	7258502	7258502	Antenna Series Choke
3	7240251	7240251	Antenna Spark Choke
4	7257979	7257979	R.F.
5	7259184	7259184	Oscillator
6	7258849	1219508	1st I.F. Assy.
7	7259290	1219602	2nd I.F. Assy.
8	1217846	1217846	"A" Spark Choke
9	1217846	1217846	Hash Choke

©John F. Rider

Compliments of www.nucow.com

MODEL 7258865

SERVICE PARTS LIST

Illus. No.	Production Part No.	Service Part No.	Description
		Condensers	
16	7258226	7258226	Antenna Trimmer
17	1219550	G 680	0.000068 mfd. molded
18	1210697	E 503	0.05 mfd. 200 V Tubular
19	1210697	E 503	0.05 mfd. 200 V Tubular
20	7242454	7242454	Dual Trimmer
20A			RF Section
20B			Oscillator Section
21	7258221	G 390	0.000039 mfd. Ceramic
22	7257567	7257567	0.000260 mfd. Compensating
23	7238788	E 104	0.1 mfd. 400 V Tubular
24	7238789	E 104	0.1 mfd. 200 V Tubular
25	1219550	G 680	0.000068 mfd. Molded
26	1218969	E 402	0.004 mfd. 600 V Tubular
27	1218883	E 102	0.001 mfd. 600 V Tubular
28	1219553	1219553	0.002200 mfd. 600 V Tubular
29	7230767	E 502	0.005 mfd. 600 V Tubular
30	7233770	E 203	0.02 mfd. 600 V Tubular
31	1219660	1219660	20 mfd. 50 V Electrolytic
32	1219463	1219463	0.008 mfd. 600 V Tubular
33	7238792	G 221	0.000220 mfd. Molded
34	7237719	7237719	0.015 mfd. 600 V Tubular
35	7240724	M 908	Electrolytic
35A			20 mfd. 25 V
35B			20 mfd. 400 V
35C			20 mfd. 400 V
36	1209817	E 254	0.25 mfd. 200 V Tubular
37	1219084	H 602	0.006 mfd. 800 V Tubular
38	1218880	1218880	0.15 mfd. 100 V Tubular
39	1218882	1218882	0.4 mfd. 100 V Tubular
40	7259710	7259710	Spark Plate and "A" Connector
41	1217848	1217848	Chassis Plate Condenser
42	7240906	H 602	0.006 mfd. 1600 V Tubular
43	1219511	E 504	0.5 mfd. 100 V Tubular
44	1219499	G 101	0.000100 mfd. Molded
		Resistors	
51	1211147	A 225	2.2 Megohms ½ W Insulated
52	1211085	B 103	10,000 Ohms 1 W Insulated
53	1213217	A 101	100 Ohms ½ W Insulated
54	7240732	A 334	330,000 Ohms ½ W Insulated
55	1213283	A 155	1.5 Megohms ½ W Insulated
56	1211192	A 223	22,000 Ohms ½ W Insulated
57	1212491	1212491	12,000 Ohms 2 W Insulated
58	1214557	A 334	330,000 Ohms ½ W Insulated
59	1215107	A 100	10 Ohms ½ W Insulated
60	1213217	A 101	100 Ohms ½ W Insulated
61	1215558	1215558	68 Ohms ½ W Insulated
62	1213283	A 155	1.5 Megohms ½ W Insulated
63	1213270	A-104	100,000 Ohms ½ W Insulated
64	1214542	A 271	270 Ohms ½ W Insulated
65	1214556	A 274	270,000 Ohms ½ W Insulated
66	7241937	A 685	6.8 Megohms ½ W Insulated
67	1219504	1219504	1600 Ohms ½ W Insulated
68	1213509	1213509	56,000 Ohms 1 W Insulated
69	7241937	A 685	6.8 Megohms ½ W Insulated
70	1213224	A 331	330 Ohms ½ W Insulated
71	1213240	1213240	2700 Ohms ½ W Insulated
72	1214555	A 224	220,000 Ohms ½ W Insulated
73	1214555	A 224	220,000 Ohms ½ W Insulated
74	1213220	A 151	150 Ohms ½ W Insulated
75	1214555	A 224	220,000 Ohms ½ W Insulated
76	1214555	A 224	220,000 Ohms ½ W Insulated
77	1213270	A 104	100,000 Ohms ½ W Insulated
*78	*1213283	*A 155	1.5 Megohms ½ W Insulated
79	7239745	7239745	430 Ohms 1 W Wire Wound Insulated
80	1213480	A 393	39,000 Ohms ½ W Insulated
81	1213481	A 332	3300 Ohms ½ W Insulated
82	1213236	1213236	1200 Ohms ½ W Insulated
83	7237835	A 221	220 Ohms ½ W Insulated
84	1213482	A 391	390 Ohms ½ W Insulated
85	1213236	1213236	1200 Ohms ½ W Insulated
86	1213481	A 332	3300 Ohms ½ W Insulated
87	7237994	B 221	220 Ohms 1 W Insulated
88	1214573	C 272 B 562	1800 Ohms Wire Wound (Replace with 2700 ohms 2 W and 5600 Ohms I W in parallel)
89	1214564	A 335	3.3 Megohms ½ W Insulated

*This resistor was 2.2 Megohms until Serial #62397—Use above Value in Service.

©John F. Rider

Compliments of www.nucow.com

MODEL 7258865, Cadillac

SERVICE PARTS LIST

Illus. No.	Production Part No.	Service Part No.	Description
		Resistors (Continued)	
*90	*7231539	*7231539	13,000 Ohms 1 W Insulated
91	1213271	1213271	120,000 Ohms ½ W Insulated
92	1216157	B 473	47,000 Ohms 1 W Insulated
93	1216154	1216154	6800 Ohms 1 W Insulated
94	1216157	B 473	47,000 Ohms 1 W Insulated
		Tubes	
	1217690	5252	6BA6
	7237752	5222	6SA7
	1218506	5262	6AV6
	1219484	5278	6AQ7GT
	1213793	5241	6V6GT
	1217924	5003	0Z4 Rectifier
	1219485	5328	12AU7
		Miscellaneous Electrical Parts	
110	7259408	7259408	Adjuster Cathode Relay
111	7259239	7259239	Control - Tone
112	7259240	7259240	Control - Volume, Sensitivity Switch
112A			Volume Control
112B			Switch
112C			Sensitivity Control
113	7259009	7259009	Relay
114	1219661	1219661	Solenoid
115	7258488	7258488	Speaker 6 x 9 Elliptical PM
116	7259011	7259011	Switch - Tuner Return
117	7259012	7259012	Switch - Station Selector
119	7259336	7259336	Transformer - Output
120	7259375	7255881	Transformer - Power
121	7239124	8542	Vibrator - Non-Synchronous
122	125588	55	Lamp - Dial Light
		MECHANICAL PARTS	
		Chassis	
131	7259710	7259710	"A" Connector and Spark Plate
132	7258520	7258520	Antenna Connector
	7236279	7236279	Socket - Octal Tube
	7259307	7259307	Socket - 9 Pin Miniature Tube
	7258073	7258073	Socket - 7 Pin Miniature Tube
	7239125	7239125	Socket - Vibrator
133	1219603	1219603	Socket - Dial Light
		Tuner	
141	7259201	7259201	Core - Iron Tuning
142	7259178	7259178	Core - Guide Bar
143	7259319	7259319	Dial - Calibrated
144	7259531	7259531	Dial Backplate Assembly
	187189	44	Pilot Light
145	7258270	7258270	Escutcheon Assy.
146	7258236	7258236	Dial Glass
	7258232	7258232	Dial Glass Retainer (2)
148	1219610	1219610	Motor Gear Train
149	7259164	7259164	Plunger - Solenoid
150	1219604	1219604	Station Selector Bar Pkg.
			Station Selector Bar
	7259125	7259125	Switch Operating Collar
			Toggle Plate
	7259111	7259111	Spring (2)
	1216508	1216508	"C" Washer
151	7259100	7259100	Spring Clip
152	7257361	7257361	Spring - Vacuum Valve Anti-Rattle
	7258239	7258239	Spring - Calibrated Dial Retainer
154	7258260	7258260	Vacuum Valve
	7259264	7259264	Vacuum Valve Shaft
155	7259055	7259055	Spring - Motor Power
		INSTALLATION PARTS	
	7258542	7258542	"A" Lead Assy.
	7240138	6013	Static Collector
	1911095	6030	Condenser - Generator
	1910147	6030	Condenser - Ignition Coil
	7259510	7259510	Escutcheon - Sensitivity Control
	7259509	7259509	Escutcheon - Tone Control
	147685	147685	Fuse - 14 Amperes
	7242024	7242024	Fuse Holder Complete
	7259369	7259369	Knob - Control
	7259508	7259508	Knob - Sensitivity Control
	7259507	7259507	Knob - Tone Control
	7259514	7259514	Spring - Tone Control Retainer

*This resistor was 15,000 Ohms until Serial #62300—Use above Value in Service.

©John F. Rider

Compliments of www.nucow.com

MODEL 7259825,
Cadillac

This Model Same as Model 7258865, Except as Indicated by This Bulletin

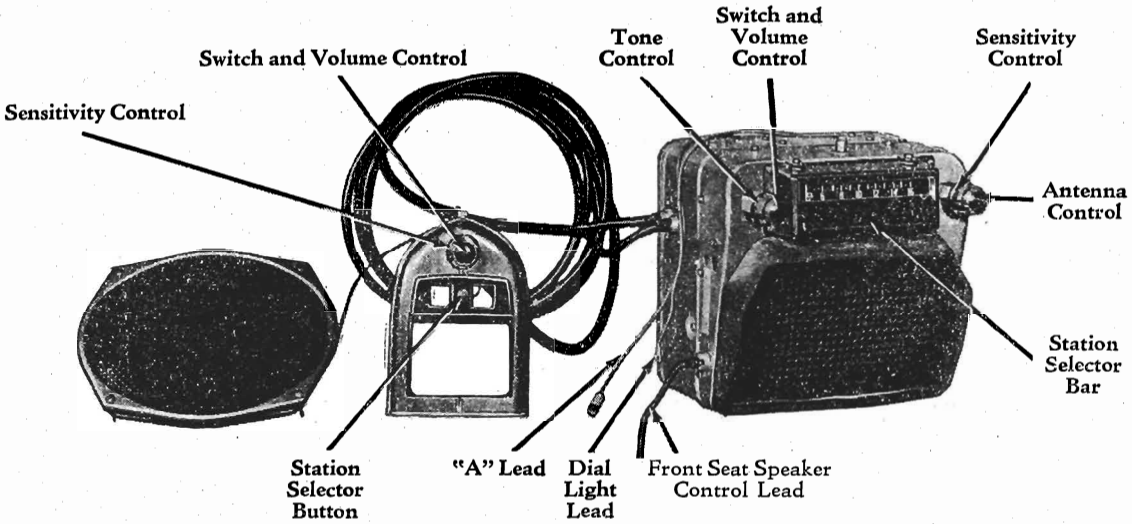

MODEL 7259825

GENERAL

MOUNTING—1950 Cadillac 75 Series Cars.

TUBES—Seven, Plus Rectifier and Trigger.

SPEAKER—6" x 9" Elliptical, Permanent Magnet, Front — 6" x 9" Elliptical, Permanent Magnet, Rear.

TUNING—Electronic.

ANTENNA TRIMMER COMPENSATION—0.000060 - 0.000085 Mfd.

TUNING RANGE—540 - 1600 KC.

PUSHBUTTON SET-UP—No pushbutton set-up is necessary. However, the number of stations on which the tuner will stop can be controlled by the use of the Sensitivity Controls.

ALIGNMENT PROCEDURE—Alignment procedure same as that of Model 7258865, Bulletin 6D-1060.

FUNCTIONAL OPERATION

The Cadillac remote control signal seeker type radio has all the controls of the Cadillac Syncro-Matic Model 7258865 Radio for front seat operation and in addition has a control head mounted in the left rear seat arm rest for rear seat operation. This remote control head has a switch, volume control, and station selector button.

After the rear seat control switch is turned on, only the rear controls operate the radio. The radio can not be operated from the front seat again until the rear control switch is turned off. Two controls that are always operated at the receiver are the tone control and the antenna control.

This radio operates from the front instrument panel in exactly the same manner as the 7258865 Model except for a front speaker switch mounted on the lower edge of the instrument panel to the left of the steering wheel. This switch can only be used when the rear control is in operation, and it gives the front seat occupants the choice of listening at a reduced volume from normal output to the stations selected by the person operating the rear selector button or completely disconnecting the front speaker.

THEORY OF OPERATION

The energizing of relays, illustration numbers 125 and 126, is accomplished by turning the rear control switch (123C) to to the "on" position. When this switch is turned on, the "A" voltage is applied across the relays, energizing the relays and closing the contacts to the rear controls. With the relays 125 and 126 energized, the rear seat controls are operative and not the front seat controls.

Once these relays are energized, the "A" supply is connected to the power transformer center-tap through contacts 1-2 and 3-4 of relay 126, regardless of the position of the front switch (112B); therefore the radio can not be turned off until the relays are de-energized by turning off the rear switch (123C). With the relays in the de-energized position, all controls are operative at the receiver, while all remote controls in the left rear arm rest are inoperative.

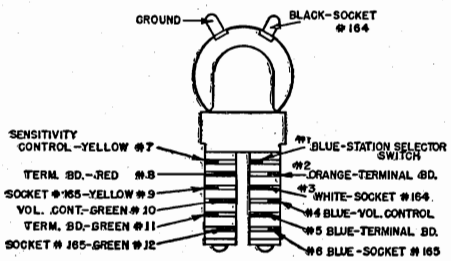

RELAY 125

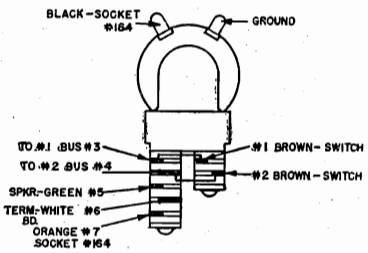

RELAY 126

Relay leads' destinations and colors are to the respective contacts as numbered on the schematic.

©John F. Rider

Compliments of www.nucow.com

MODEL 7259825, Cadillac

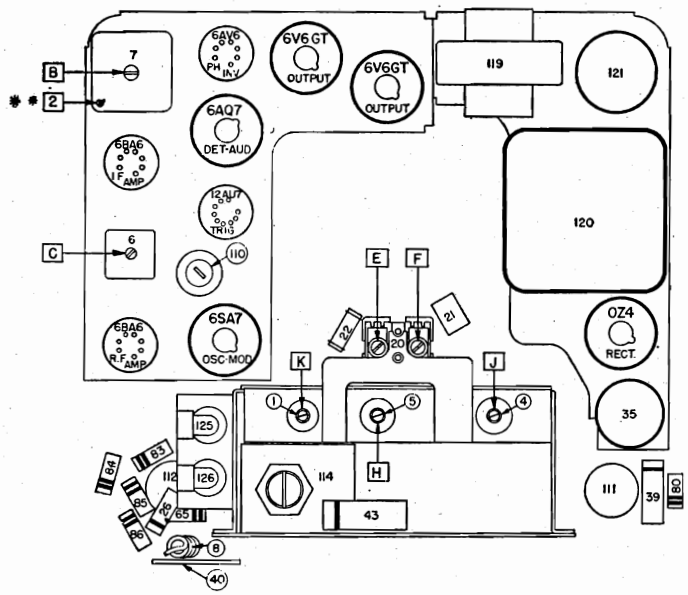

PARTS LAYOUT — TUBE VIEW

**Connect a VTVM from this point to ground for output indications during alignment.

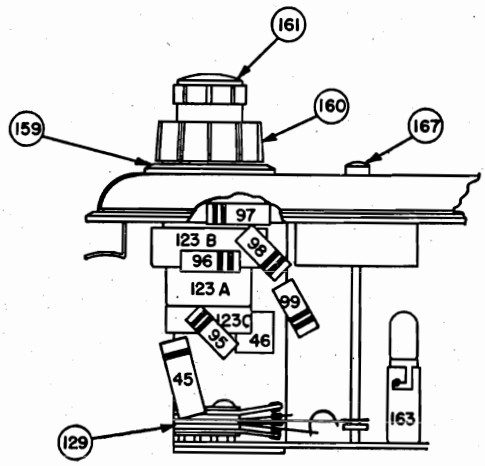

PARTS LAYOUT — REAR CONTROL

SCHEMATIC DATA

All voltages measured from sockets terminals to chassis with a 20,000 Ohm per volt voltmeter. Measurements taken with no signal and 6.0 volts at spark plate. Oscillator grid voltage taken with the set tuned to 1000 KC. Tuner not seeking.

Total "A" Drain 7.3 Amps.

Total "B" Drain 67MA.

Tolerance on voltages ± 10%.

*—Indicates lead from tuner coil assy.

**—See Service Parts List for replacement.

□—Colors of terminals on service part.

Note the red and black circuits are exactly the same as those of Model 7258865. The blue circuit has been added so that the tuner can be controlled from the rear seat location. This circuit is switched in or out of control by the relays which are energized from the rear seat.

©John F. Rider

Compliments of www.nucow.com

MODEL 7259825,
Cadillac

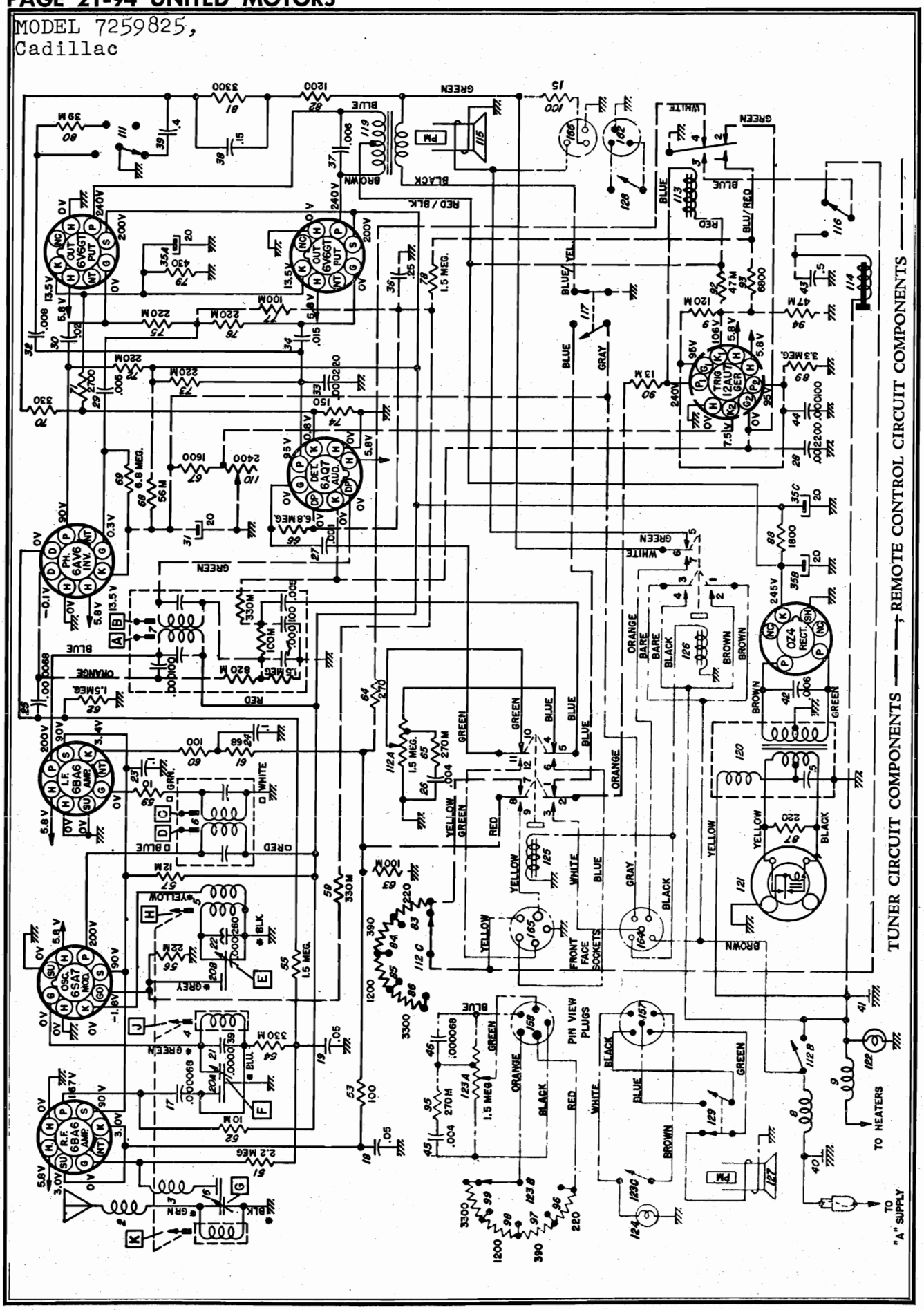

©John F. Rider

Compliments of www.nucow.com

MODEL 7259825,
Cadillac

CADILLAC REMOTE CONTROL SYNCROMATIC MODEL SERVICE PARTS LIST

The Service Parts List of the Cadillac Remote Control Syncromatic Radio is identical to the Cadillac Syncromatic Radio, Model 7258865, except for the illustration numbers and parts listed below: Those parts marked with an asterisk (*) are changed from Model 7258865—the others are added parts.

ELECTRICAL PARTS

Illus. No.	Production Part No.	Service Part No.	Description
		Condensers	
* 40	7241259	7241259	Spark Plate
45	1218969	E 402	.004 Mfd 600V Tubular
46	1219550	G 680	.000068 Mfd Molded
		Resistors	
95	1214556	A 274	270,000 Ohms ½W Insulated
96	7237835	A 221	220 Ohms ½W Insulated
97	1213482	A 391	390 Ohms ½W Insulated
98	1213236	1213236	1200 Ohms ½W Insulated
99	1213481	A 332	3300 Ohms ½W Insulated
**100	1219672	1219672	15 Ohms 2W Insulated
		Miscellaneous	
123	7259947	7259947	Control - Volume, Sensitivity and Switch - Rear
123A			Volume
123B			Sensitivity
123C			Switch
124	187189	44	Lamp - Dial Light
125	7259951	7259951	Relay - 4 Section
126	7259952	7259952	Relay - 3 Section
127	1457062	1457062	Speaker - 6x9 Elliptical PM, Rear
128	7259950	7259950	Switch - Front Speaker
129	7259012	7259012	Switch - Station Selector, Rear

MECHANICAL PARTS

		Chassis	
*131	7257891	7257891	A-Lead Assembly
		Remote Control	
	7259946	7259946	Cable - Rear Seat
157	1219682	1219682	Plug and Shell Pkg.
158	1219679	1219679	Plug and Shell Pkg.
	4589122	4589122	Escutcheon - Arm Rest
159	7259510	7259510	Escutcheon - Sensitivity Control
160	7259508	7259508	Knob - Sensitivity Control
161	7259369	7259369	Knob Control
162	1219688	1219688	Plug - Front Speaker Switch
163	1219686	1219686	Socket Pkg. - Dial Light
164	7259944	7259944	Socket - Cable Plug
165	7259943	7259943	Socket - Cable Plug
166	7258498	7258498	Socket - Front Speaker Plug
167	1219687	1219687	Station Selector Button Pkg.
			Push Button Assy.
	7259125	7259125	Retaining Ring
			Washer
			Felt Washer
	7256121	7256121	"C" Washer

INSTALLATION PARTS

*	7259970	7259970	"A" Lead Assembly

** Located on the top of the hash cover.

©John F. Rider

Compliments of www.nucow.com

Compliments of www.nucow.com

DESCRIPTION

This model is a 4 tube (plus rectifier) superhetrodyne radio receiver designed for use on 117 volts 60 cycle AC or 117 volts DC power supply.

The tubes used are:—

1—12SA7	Oscillator Converter	1—12SQ7	AVC Detector and 1st Audio
1—12SK7	I.F. Amplifier		
1—35Z5GT	Power Rectifier	1—50L6GT	Power Output

This receiver covers the frequency range from 540 kilocycles to 1630 kilocycles (KC).

INSTALLATION

The loop antenna incorporated in the receiver is sufficient for all normal reception. If the receiver is to be used in very remote areas or in a building constructed mainly of steel, it may be necessary to use an external antenna. The antenna should be approximately fifty feet long, including lead in, and placed as far away from trees, buildings, etc., as possible. The lead in from the external antenna should be connected to the wire at the back of the receiver. An external ground is not necessary.

When using a DC power supply and after allowing sufficient time for the tubes to warm up the receiver does not operate, remove the line cord plug from the receptacle and reverse. Replace the plug in the reversed position and allow tubes to warm up at which time the receiver will operate.

If an excessive hum is noticed when operating from an AC power source, reverse the line cord plug to determine which position gives the best results.

NOTE: All loop antennas are somewhat directional in their characteristics.

Reception can sometimes be improved and/or local interference reduced by turning the set in a different direction.

OPERATION

To turn the receiver on, rotate the on-off switch and volume control knob (left hand control) clockwise about one-half its range. This supplies power to the receiver. Allow about thirty seconds for the tubes to warm up after which the desired station may be tuned by rotating the station selector (right hand control).

For best tone, tune the desired station with the volume control turned low. This enables you to get the exact point where the station comes in best. Then, adjust the volume to the desired level with volume control.

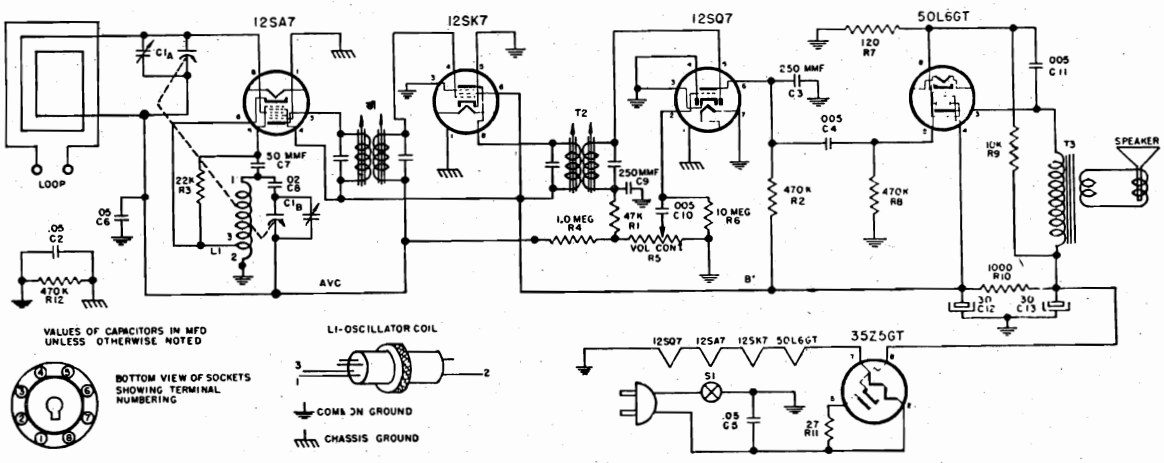

©John F. Rider

Compliments of www.nucow.com

MODEL 142 Series

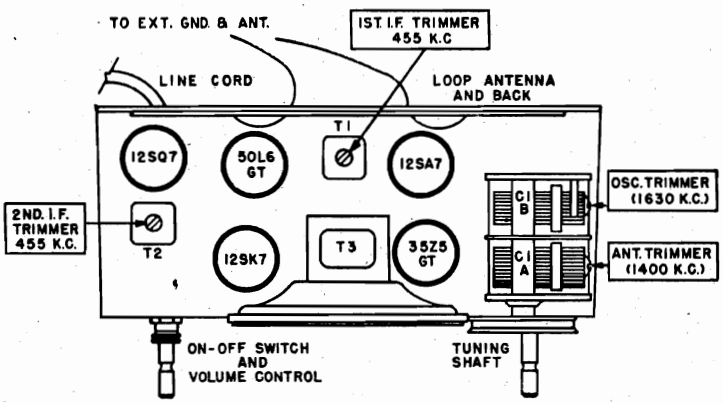

ALIGNMENT PROCEDURE

The following alignment procedure is for use only by competent servicemen having the proper equipment.

The alignment should be made with volume control fully on, and the output from the signal generator as low as possible, to prevent A.V.C. action from interfering with correct alignment.

With the output meter connected across the voice coil of the speaker, the output meter reading for 50 milli-watts is .4 volts using a signal which is modulated 400 c.p.s.

Adjust all trimmers for maximum output. Repeat alignment procedure given below as a final check.

CAUTION: This is an A.C.-D.C. receiver and when aligning the set it is necessary to isolate the Signal Generator or the Receiver from the line by use of a transformer, or place a .2 MFD. condenser in both test leads of the Signal Generator.

Position of Variable	Generator Frequency	Dummy Ant. Mfd.	Generator Connections	Trimmer Adjustment	Trimmer Function
Fully open	455 KC	.1	*12SA7 Grid (Stator of C1A)	T1	Input I.F.
Fully open	455 KC	.1	*12SA7 Grid (Stator of C1A)	T2	Output I.F.
Fully open	1630 KC	.1	*12SA7 Grid (Stator of C1A)	C1B	Oscillator
Tune in signal from generator	1400 KC	.00025	**Ant. lead from loop	C1A	Antenna

*Connect low side of signal generator to common negative through .25 MFD condenser.

**Connect low side of signal generator to ground lead.

CODE NO.	PART NO.	DESCRIPTION
C1A, C1B	B19-198	Variable condenser
C2, C5	A16-158	.05 MFD 400 volt condenser
C3, C9	A15-176	250 MMF mica condenser
C4, C10, C11	A16-153	.005 MFD 600 volt condenser
C6	A16-152	.05 MFD 200 volt condenser
C7	A15-175	50 MMF mica condenser
C8	A16-150	.02 MFD 400 volt condenser
C12, C13	B18-283	30 x 30 MFD 150 volt electrolytic condenser
R1	A60-685	47K ohm ½ watt 20% resistor
R2, R8, R12	A60-662	470K ohm, ½ watt 20% resistor
R3	A60-659	22K ohm ½ watt 20% resistor
R4	A60-668	1 megohm ½ watt 20% resistor
R5, S1	A24-179	Volume control, with switch
R6	A60-663	10 megohm ½ watt 20% resistor
R7	A60-702	120 ohm ½ watt 10% resistor
R9	A60-698	10K ohm 1 watt 10% resistor
R10	A60-732	1000 ohm 1 watt 10% resistor
R11	A60-690	27 ohm ½ watt 10% resistor
T1	C10-475	1st I.F. Transformer
T2	A10-479	2nd I.F. Transformer
L1	B10-480	Oscillator coil
	42-320W	Cabinet, molded, walnut
	A42-420	Cabinet, molded, ivory
	A51-105	Dial cord, 15" long
	48-34	Dial crystal
	67-462	Dial scale
	52-165W	Knob, walnut
	A52-222	Knob, ivory
	A23-151	Line cord
	S84-267	Loop and back assembly
	B79-366	Speaker, 4" P. M. (includes output transformer).

©John F. Rider

Compliments of www.nucow.com

MODEL 146 Series

DESCRIPTION

This model is a 4 tube (plus rectifier) superhetrodyne radio receiver designed for use on 117 volts 60 cycle AC or 117 volts DC power supply.

The tubes used are:—

1—12SA7 Oscillator Converter
1—12SK7 I.F. Amplifier
1—35Z5GT Power Rectifier
1—12SQ7 AVC Detector and 1st Audio
1—50L6GT Power Output

This receiver covers the frequency range from 540 kilocycles to 1630 kilocycles (KC).

OPERATION

To turn the receiver on, rotate the on-off switch and volume control knob (left hand control) clockwise about one-half its range. This supplies power to the receiver. Allow about thirty seconds for the tubes to warm up after which the desired station may be tuned by rotating the station selector (right hand control).

For best tone, tune the desired station with the volume control turned low. This enables you to get the exact point where the station comes in best. Then, adjust the volume to the desired level with volume control.

ALIGNMENT PROCEDURE

The alignment should be made with volume control fully on, and the output from the signal generator as low as possible, to prevent A.V.C. action from interfering with correct alignment.

With the output meter connected across the voice coil of the speaker, the output meter reading for 50 milli-watts is .4 volts using a signal which is modulated 400 c.p.s.

Adjust all trimmers for maximum output. Repeat alignment procedure given below as a final check.

CAUTION: This is an A.C.-D.C. receiver and when aligning the set it is necessary to isolate the Signal Generator or the Receiver from the line by use of a transformer, or place a .2 MFD. condenser in both test leads of the Signal Generator.

Position of Variable	Generator Frequency	Dummy Ant. Mfd.	Generator Connections	Trimmer Adjustment	Trimmer Function
Fully open	455 KC	.1	*12SA7 Grid (Stator of C1A)	T1	Input I.F.
Fully open	455 KC	.1	*12SA7 Grid (Stator of C1A)	T2	Output I.F.
Fully open	1630 KC	.00025	*12SA7 Grid (Stator of C1A)	C1B	Oscillator
Tune in signal from generator	1400 KC		Loosely coupled to loop antenna	C1A	Antenna

*Connect ground lead of signal generator to common negative.

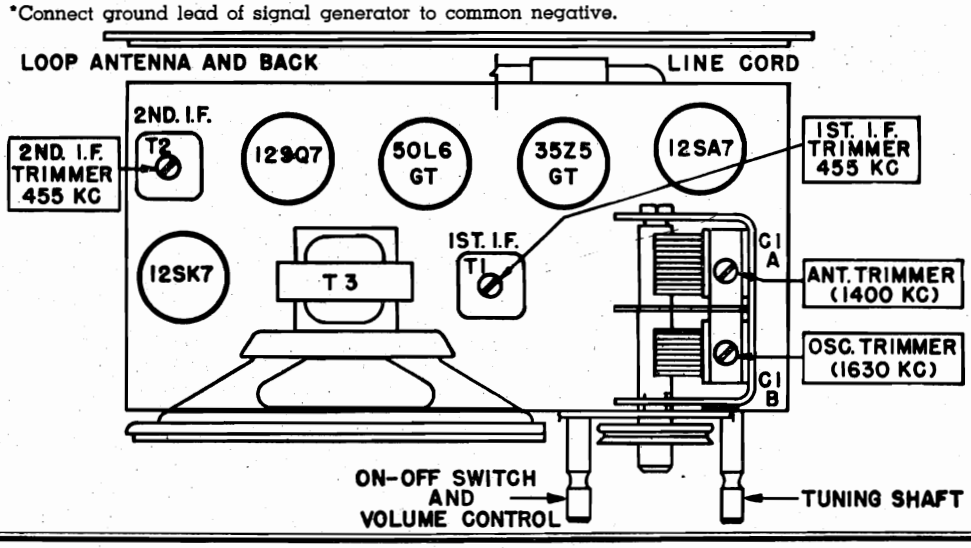

©John F. Rider

Compliments of www.nucow.com

MODEL 146 Series

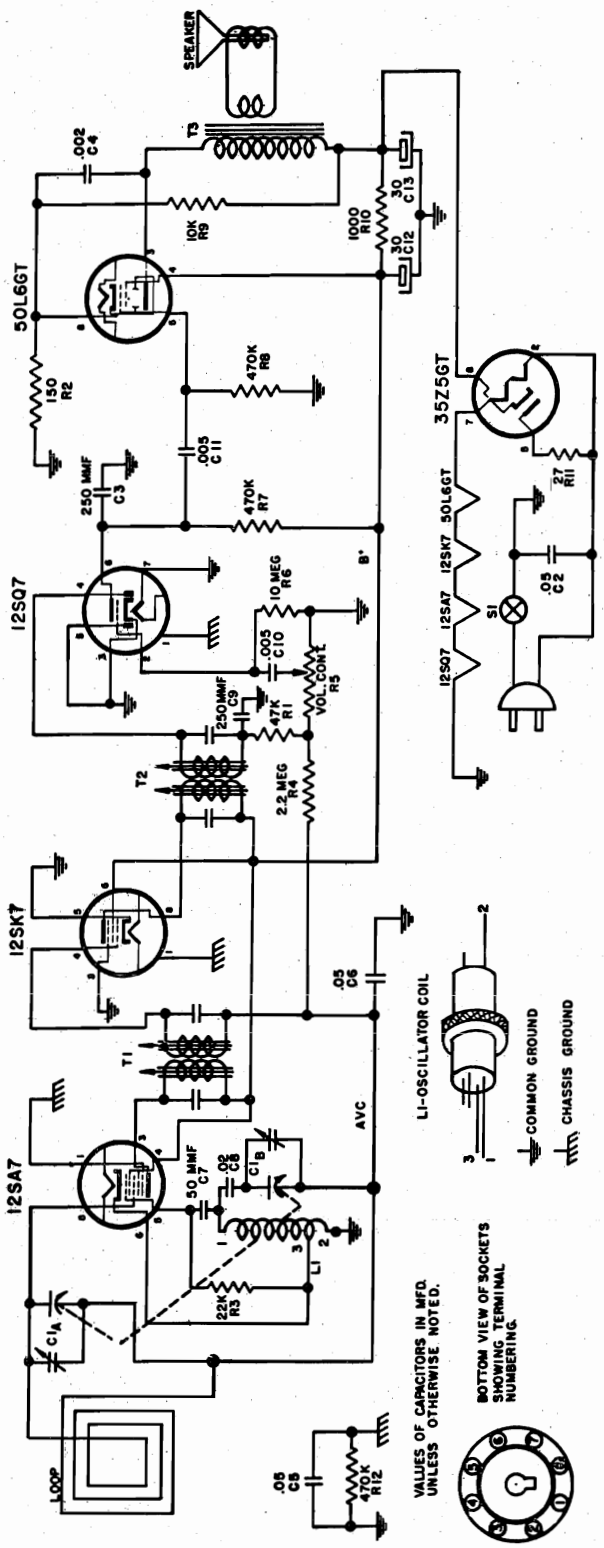

PARTS LIST

CODE	PART NO.	DESCRIPTION
C1A, C1B	B19-194	Variable condenser
C2, C5	A16-158	.05 MFD 400 volt condenser
C3, C9	A15-178	250 MMF mica condenser
C4	A16-155	.002 MFD 600 volt condenser
C6	A16-152	.05 MFD 200 volt condenser
C7	A15-175	50 MMF mica condenser
C8	A16-150	.02 MFD 400 volt condenser
C10, C11	A16-153	.005 MFD 600 volt condenser
C12, C13	B18-283	30-30 MFD 150 volt electrolytic condenser
R1	A60-685	47K ohm ½ watt resistor
R2	A60-686	150 ohm ½ watt resistor
R3	A60-659	22K ohm ½ watt resistor
R4	A60-684	2.2 megohm ½ watt resistor
R5	A24-174	Volume control and switch, 1 megohm

CODE	PART NO.	DESCRIPTION
R6	A60-663	10 megohm ½ watt resistor
R7, R8, R12	A60-662	470K ohm ½ watt resistor
R9	A60-698	10K ohm 1 watt resistor
R10	A60-732	1000 ohm 1 watt resistor
R11	A60-690	27 ohm ½ watt resistor
T1, T2	A10-479	1st and 2nd I.F. transformers
L1	B10-502	Oscillator coil
	A42-451	Cabinet, molded, brown
	D42-424	Cabinet, molded, ivory
	B67-510	Dial scale, paper
	A52-243	Knob, tenite, black
	A52-222	Knob, tenite, ivory
	S84-266	Loop and back
	A58-69	Pointer, "Clarion"
	B78-378	Speaker, 5", P.M. (includes output transformer)

©John F. Rider

Compliments of www.nucow.com

DESCRIPTION

Model 11611 is a 4-tube superheterodyne portable receiver designed for operation on a 117 volt 50-60 cycle, 117 volt DC power supply or from a self-contained battery.

This receiver covers the frequency range from 535 kilocycles to 1600 kilocycles (K.C.).

The tubes used are:—

1R5—Mixer, Oscillator
1S5—Detector and first Audio
1U4—I. F. Amplifier
3Q4—Power Output

No rectifier tube is required as a Selenium rectifier is used when operating on A. C. current.

INSTALLATION

The radio is shipped from the factory minus the battery. One combination A. B. Battery Pack is required, having 90 volts "B" and 7½ volts "A," such as Ray-o-vac No. AB-994, General No. 60A6F6/5, Burgess No. D5A60 or Eveready No. 753.

To install the battery remove the back from the cabinet, place the battery in the space provided and insert the battery plug into the socket.

The battery A-C switch, located on the top right side of the chassis, is accessible from the rear of the cabinet after removing the back. For battery operation this switch should be turned so that the extended portion of the knob is over the A. C. socket, thereby making it impossible to connect the radio to A. C. current without setting the change-over switch in its proper position. The set is now ready for operation from its self-contained Battery.

To operate the receiver from 117 volts A. C. or D. C., turn the battery A. C. switch away from the A. C. socket. Remove the A. C. cord from its brackets on the cabinet back and insert the plug into the A. C. socket, placing the plug on the other end of the cord into the wall receptacle. The receiver is now ready for operation on 117 volts A. C. or D. C. current.

ALIGNMENT PROCEDURE

The following alignment procedure is for use only by competent servicemen having the proper equipment.

The alignment should be made with volume control fully on, and the output from the signal generator as low as possible, to prevent A. V. C. action from interfering with correct alignment.

With the output meter connect across the voice coil of the speaker, the output meter reading for 50 milliwatts is .4 volts using a signal which is modulated 400 c.p.s.

Adjust all trimmers for maximum output. Repeat alignment procedure given below as a final check.

CAUTION: This is an A.C.-D. C. receiver and if alignment is made with the receiver connected to 117 volts A. C. or D. C., it is necessary to isolate the signal generator or the receiver from the line by use of a transformer, or place a .2 M. F. D. condenser in both test leads of the Signal Generator.

ALIGNMENT PROCEDURE

(Continued)

Position of Variable	Generator Frequency	Dummy Ant. Mfd.	Generator Connections	Trimmer Adjustment	Trimmer Function
Fully open	455 KC	.1	*1R5 Grid (Stator of CIA)	T2	Output I. F.
Fully open	455 KC	.1	*1R5 Grid (Stator of CIA)	T1	Input I. F.
Fully open	1600 KC	.00025	**Ant. lead (Stapled to Cabinet)	C1B	Oscillator
Tune in signal from generator	1400 KC	.00025	**Ant. lead (Stapled to Cabinet)	C1A	Antenna

*Connect ground lead of signal generator to Common "B."
**Connect ground lead of signal generator to ground wire stapled to cabinet.

If it should become necessary to re-adjust the loop antenna loading coil tune in a weak station, between 600 and 650 Kilocycles, and adjust for maximum output.

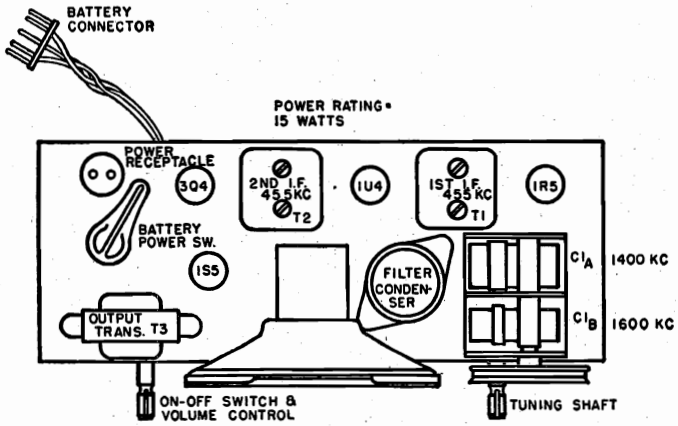

©John F. Rider

Compliments of www.nucow.com

PARTS LIST

Code	Part No.	DESCRIPTION
C1A, C1B	B19-188	Variable Condenser
C2, C5, C6	A15-188	100 MMF Mica Condenser
C3, C7	A15-175	50 MMF Mica Condenser
C4, C16	A16-155	.002 MFD. 600 volt Condenser
C8, C9, C10	A16-166	.005 MFD. 150 volt Condenser
C11, C13	A16-165	.01 MFD. 200 volt Condenser
C12, C15	A16-160	.1 MFD. 400 volt Condenser
C 14	A16-157	.1 MFD. 200 volt Condenser
C18	A16-158	.05 MFD. 400 volt Condenser
C17		20 MFD. 150 volt Electrolytic Condenser
C19	A18-281	40 MFD. 150 volt Electrolytic Condenser
C20, C21		100 MFD. 25 volt Electrolytic Condenser

Code	Part No.	DESCRIPTION
R1, R7, R9, R10	A60-684	2.2 Megohm ½ watt 20% Resistor
R2	A60-671	100K Ohm ½ watt 20% Resistor
R3, R6	A60-663	10 Megohm ½ watt 20% Resistor
R4	A60-685	47K Ohm ½ watt 20% Resistor
R8	A60-707	470 Ohm ½ watt 20% Resistor
R11	A60-662	470K Ohm ½ watt 20% Resistor
R12	A60-709	820 Ohm ½ watt 10% Resistor
R13	A60-710	3900 Ohm ½ watt 10% Resistor
R14	A60-675	1000 Ohm ½ watt 20% Resistor
R15	A60-708	680 Ohm ½ watt 10% Resistor
R16	A60-667	220K Ohm ½ watt 20% Resistor
R17	A60-712	75 Ohm 3 watt 5% Resistor

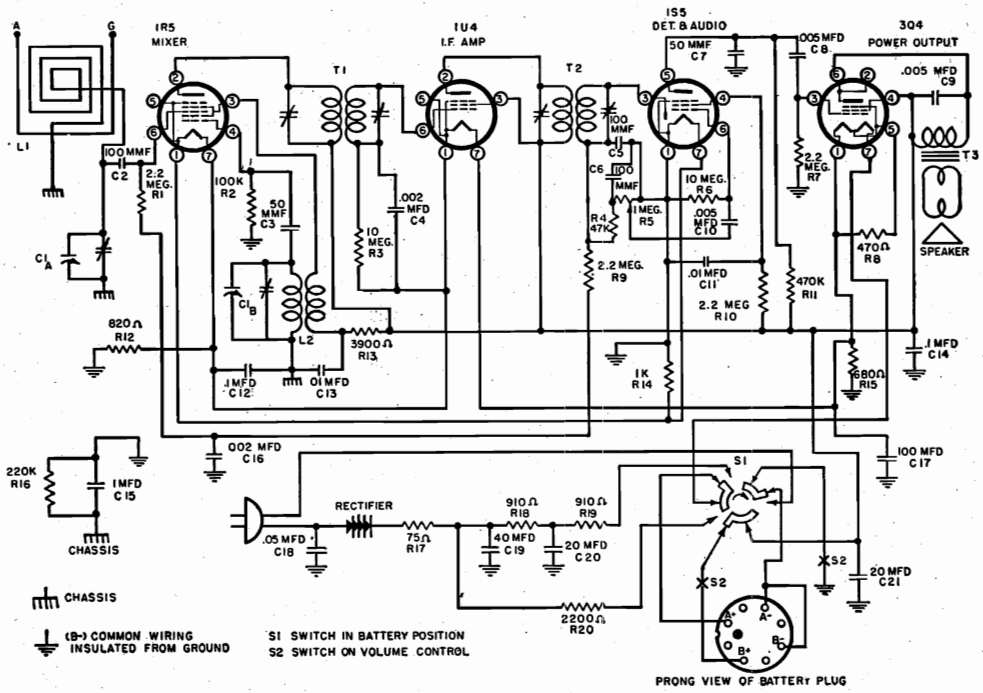

Code	Part No.	DESCRIPTION
R18, R19	A60-713	1820 Ohm 10 watt 5% Resistor (each section 910 ohms)
R20	A60-714	2200 Ohm ½ watt 10% Resistor
L2	B10-460	Oscillator Coil
T1	C10-462	1st I. F. Transformer
T2	C10-463	2nd I. F. Transformer
R5	A24-170	Volume Control and Switch
	A10-470	Loading Coil
	A52-197	Knob, Tuning
	A52-198	Knob, Volume
	A52-196	Knob, Battery—AC-DC
	B67-496	Dial Scale
	A58-63	Dial Pointer
	A83-391	Selenium Rectifier
	A75-60	Tuning Shaft
S1	B69-173	Switch, Battery—AC-DC
T3	A80-228	Output Transformer
	B79-350	Speaker, 5" P M
	A45-119	Plug, Battery
	D42-406	Cabinet
	D40-140	Escutcheon and Grille
	S84-123	Line Cord Assembly
	B21-109	Cover, Chassis
	A68-29	Receptacle, Male
	A23-151	Line Cord and Plug
	A68-30	Plug, Female
	C10-473	Alternate 1st I. F. Transformer
	C10-474	Alternate 2nd I. F. Transformer
	C10-471	Alternate 1st I. F. Transformer
	C10-472	Alternate 2nd I. F. Transformer
	C10-475	Alternate I. F. Transformer May be used as 1st or 2nd I. F. Transformer

©John F. Rider
Compliments of www.nucow.com

MODEL D1034A

CHECK YOUR LINE VOLTAGE

Unless otherwise marked this radio must be operated on a supply of 105-125 volts AC, 60 cycles only. Do not connect the radio to a wall outlet unless certain that the power supply is correct for the receiver. If in doubt, telephone your local power company before inserting the plug. Radios of this model which are to be used on other power supplies are marked accordingly.

FM BAND

88 - 108 MEGACYCLES — This band is calibrated in megacycles and covers the newly allocated frequency modulation band of 88-108 megacycles. Reception in this band is usually limited to "line of sight" distances between the transmitting and receiving antennas. This is normally up to about 30 miles with approximately 45 miles being the extreme range.

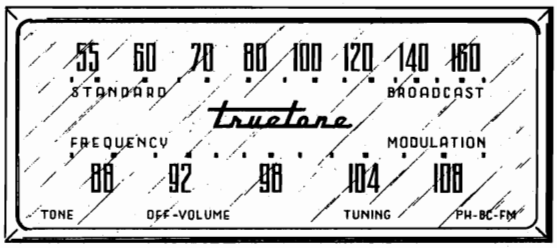

BROADCAST BAND

540 - 1600 KILOCYCLES — This band is calibrated in channel numbers. To obtain the kilocycle number add a zero to the number on the dial scale.

TONE CONTROL

Use this knob to adjust the tone of the receiver. When turned clockwise the high notes will predominate and when turned counterclockwise a deep bass effect will result.

BAND AND PHONO RADIO SWITCH

This control has three positions, FM, Broadcast and Phono. In the Phono position, the electrical circuits are connected for the reproduction of records played on the Automatic Record Changer.

ON-OFF SWITCH AND VOLUME CONTROL

The On-Off switch and Volume control are operated by the same knob. To turn the radio on, turn the knob clockwise until a click is heard. Allow approximately 30 seconds for the tubes to heat. Then continue to turn the knob clockwise to increase the volume.

TUNING KNOB

Use this control to tune in the desired station. Turn the knob until the station is heard. Then slowly rotate it back and forth until the signal is clearest and strongest. If signal is too strong, reduce it by means of the volume control, not by using the tuning knob.

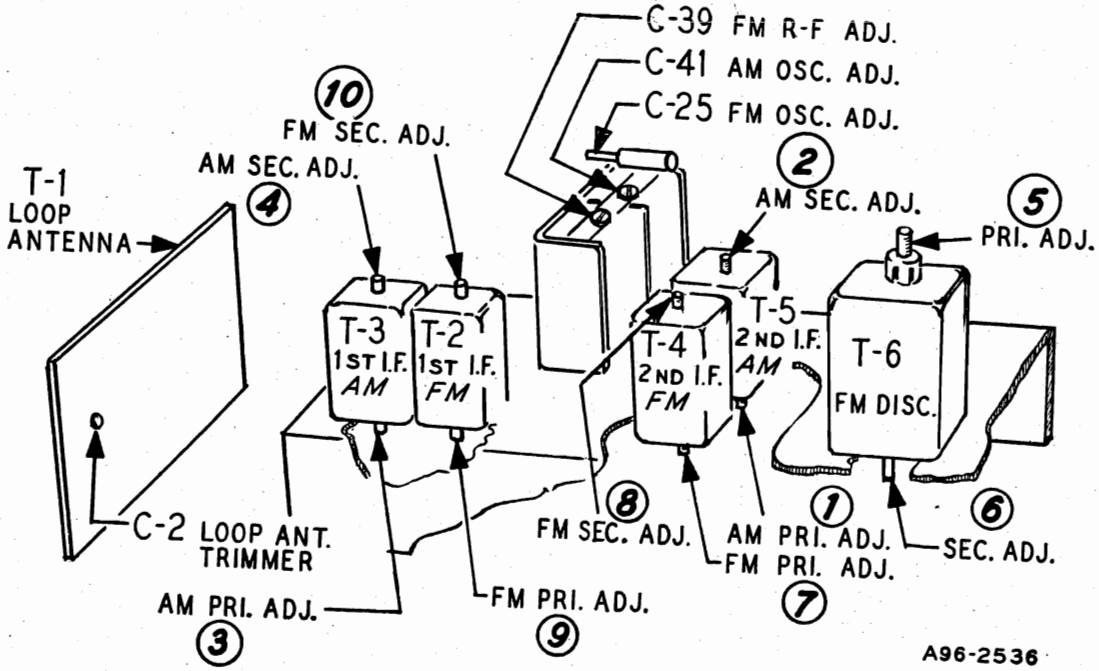

©John F. Rider

Compliments of www.nucow.com

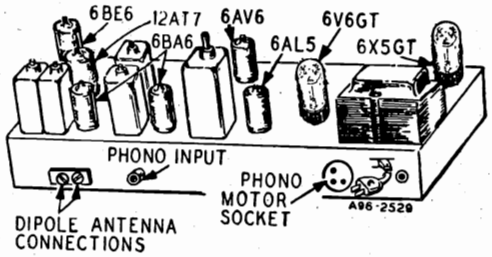

DRIVE CORD REPLACEMENT

Replacement of the drive cord may be accomplished as shown in the illustration. For this purpose use the new drive cord assembly listed in the Replacement Parts List. Turn the gang condenser until the plates are fully meshed Then install the string as shown, winding three turns counter-clockwise around the tuning shaft with the turns progressing away from the chassis. After the cord is installed, rotate the tuning shaft several times in order to take up any slack in the cord.

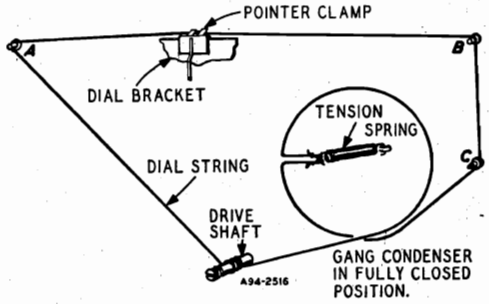

ELECTRICAL SPECIFICATIONS

Power Output—
117 volts AC—40 watts
60 watts phono operating

Power Output—
1.9 watts maximum
.8 watts 10% distortion

Speaker—8 inch PM dynamic

Frequency Ranges—
Broadcast 540-1600 KC
Frequency modulation 88-108 MC

Intermediate Frequency—
AM 455 KC — FM 10.7 MC

Selectivity — AM — 45 KC broad at 1000 times signal, measured at 1000 KC

I.F. FM—200 KC broad at 2 times down

I.F. FM—950 KC broad at 200 times down

AM Sensitivity—(For .5 watt output with external antenna)
25 microvolts average

FM Sensitivity—(For .5 watt output)
25 microvolts average

ALIGNMENT PROCEDURES
AM STAGES

The following is required for aligning:
An All Wave Signal Generator Which Will Provide an Accurately Calibrated Signal at the Test Frequencies as Listed.
Output Indicating Meter, Non-Metallic Screwdriver, Dummy Antennas — .1 mf, and 50mmf.

Volume Control Maximum all Adjustments.
Connect Radio Chassis to Ground Post of Signal Generator with a Short Heavy Lead.
Allow Chassis and Signal Generator to "Heat Up" for Several Minutes.

SIGNAL GENERATOR						
FREQUENCY SETTING	CONNECT GENERATOR OUTPUT TO	THROUGH DUMMY ANTENNA	CONNECT GROUND TO	GANG CONDENSER SETTING	ADJUST	ADJUST FOR
455 KC	Control Grid 1st 6BA6 Pin No. 1	.1 mf	Chassis Base	Rotor Fully Open	2nd I.F. Pri. (1) and Sec. (2)	Maximum Output
455 KC	Control Grid 6BE6 Pin No. 7 1st Det.	.1 mf	Chassis Base	Rotor Fully Open	1st I.F. Pri. (3) and Sec. (4)	Maximum Output
455 KC	Control Grid 6BE6 Pin No. 7	.1 mf	Chassis Base	Rotor Fully Open	2nd I-F Pri. (1) and Sec. (2)	Maximum Output
1620 KC	Control Grid 6BE6 Pin No. 7	.1 mf	Chassis Base	Rotor Fully Open	Oscillator C-41	Maximum Output
1400 KC	External Antenna Lead	50 mmf	Chassis Base	Turn Rotor to Max. Output. Set Pointer to 1400 KC See Note A	Antenna C-2	Maximum Output

NOTE A—If the pointer is not at 1400 KC on the dial, reset pointer to the 1400 KC mark on the dial scale.

©John F. Rider
Compliments of www.nucow.com

MODEL D1034A

FM STAGES

The following is required for aligning:

An accurately calibrated signal generator providing unmodulated signals at the test frequencies listed below.

Non-metallic screwdriver.

Dummy Antennas and I-F Loading Resistor—2500 mmf, 300 ohms

Zero center scale DC vacuum tube voltmeter having a range of approximately 3 volts.
(If a zero center scale meter is not available, a standard scale vacuum tube voltmeter may be used by reversing the meter connections for negative readings).
Allow chassis and signal generator to "Heat Up" for several minutes.

SIGNAL GENERATOR	FREQUENCY SETTING	CONNECT GENERATOR OUTPUT TO	THROUGH DUMMY ANTENNA	BAND SWITCH SETTING	GANG CONDENSER SETTING	ADJUST	ADJUST FOR
Discriminator	10.7 MC	6BA6 2nd I-F Pin 1 and Chassis	2500 mmf	FM	Rotor Fully Open	Disc. Pri. (5) Note A	Maximum Deflection
	10.7 MC	6BA6 2nd I-F Pin 1 and Chassis	2500 mmf	FM	Rotor Fully Open	Disc. Sec. (6) Note B	
I-F	10.7 MC Note C	6BA6 1st I-F Pin 1 and Chassis	2500 mmf	FM	Rotor Fully Open	2nd I-F Pri. (7) Sec. (8) Note D	Maximum Deflection
Discriminator	10.7 MC	6BA6 1st I-F Pin 1 and Chassis	2500 mmf	FM	Rotor Fully Open	Disc. Pri. (5) Note D	Maximum Deflection
I-F	10.7 MC	Junction C-32A & B (Dual 100 mmf cond.) And chassis	2500 mmf	FM	Rotor Fully Open	1st I-F Pri. (9) & Sec. (10) 2nd I-F Pri. (7) & Sec. (8) Disc. Pri. (5) In Order Shown Note D	Maximum Deflection
	10.7 MC	Same as above	2500 mmf	FM	Rotor Fully Open	Disc. Sec. (6) Note B	Maximum Deflection
RECHECK I-F ADJUSTMENTS IN ORDER GIVEN							
Oscillator	108.5	Disconnect built-in dipole antenna and connect generator to dipole terminals with resistor in series.	300 ohms	FM	Rotor Fully Open	Osc. C-25	Maximum Deflection
Antenna	104.5	Same as above	300 ohms	FM	Tune rotor for max. AVC voltage	Ant. C-39	Maximum Deflection
RECHECK ANTENNA & OSC. ADJUSTMENTS IN ORDER GIVEN							

FM ALIGNMENT NOTES

NOTE A—The zero center scale DC vacuum tube voltmeter is to be connected between chassis ground and the AVC line. A signal of .1 volt must be fed into the receiver for this adjustment.
Note output voltage on the zero center DC vacuum tube voltmeter

NOTE B—Disconnect zero center DC vacuum tube voltmeter from AVC and connect it at the audio takeoff point at the 27 K ohm resistor (R-10) and its junction with the terminal strip. Adjust for zero voltage indication.

NOTE C—AM I-F coils must be aligned before attempting to align the FM I-F coils.

NOTE D—Connect zero center DC vacuum tube voltmeter as in Note A. Adjust input to give same output on the zero center DC vacuum tube voltmeter as in Note A.

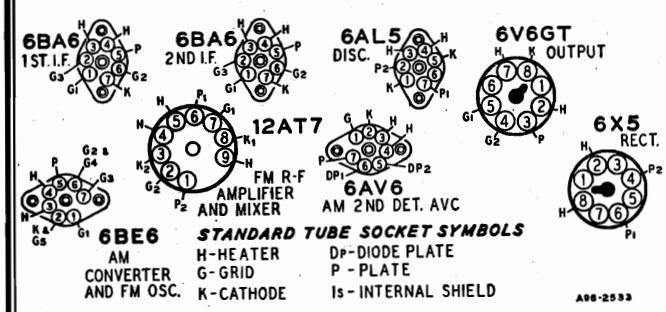

TUBE SOCKET VOLTAGES

Socket voltages are shown on the schematic diagram at the tube socket terminals. All voltages are between the socket terminal and chassis ground. Plate, screen and cathode voltages were taken with a 1000 ohm-per-volt meter with a 300 volt scale used for plate and screen voltages. Audio grid voltages were read with a vacuum tube volt-meter. Conditions of measurement are:

Line voltage .....117 Volts AC
Signal Input .....None
A Variation of ±10% is usually permissible.

©John F. Rider

Compliments of www.nucow.com

MODEL D1034A

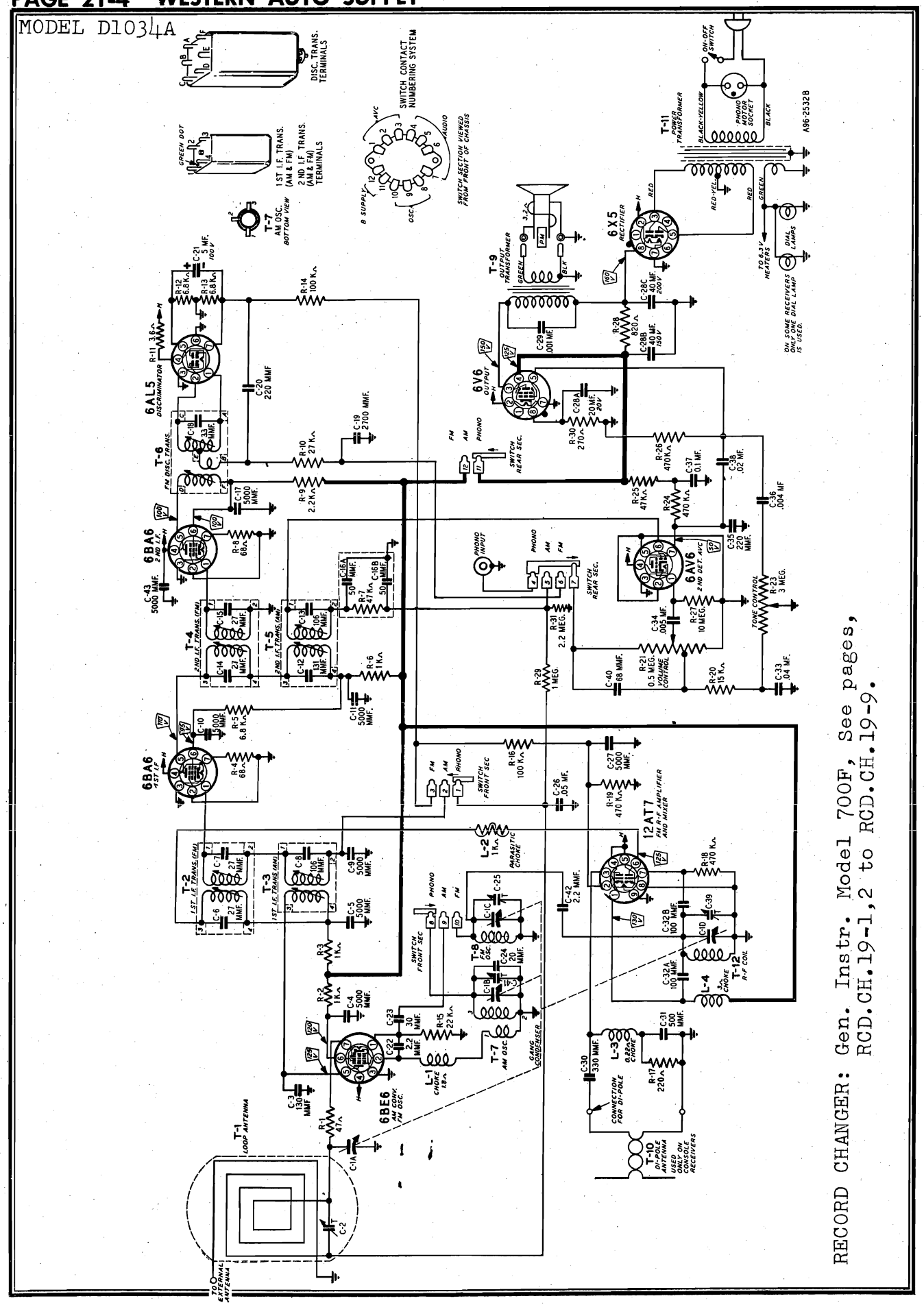

RECORD CHANGER: Gen. Instr. Model 700F, See pages, RCD.CH.19-1,2 to RCD.CH.19-9.

©John F. Rider

Compliments of www.nucow.com

MODEL D1034A

REPLACEMENT PARTS LIST

NOTICE: There is a model number label on the chassis. This label identifies the radio as to chassis, dial and issue letter. When ordering parts or writing, give ALL information on this label.

MISCELLANEOUS

12A477	8" P.M. Speaker
4X1082	Escutcheon
10X755	Knob
13X546	Line Cord & Plug Assembly
2A393	Band Change Switch
3A435	Molded Octal Tube Socket
3A305	Phono Socket
3A426	Tube Socket (1st 6BA6)
3A443	Tube Socket (12AT7)
3A304	Phono Motor Socket
3A427	Tube Socket (6BE6)
3A439	Tube Socket (Miniature)
	Cabinet No. 054

CAPACITORS

C-1	14A209	Gang Condenser Assembly		
C-2	17A256	2-24 mmf		Trimmer
C-3	47X559	130 mmf		Molded Mica
C-4, C-5, C-9, C-10, C-11, C-17, C-27, C-43	47X507	5000 mmf		Ceramic
C-6, C-7	Part of T-2 (1st I-F Trans. FM)			
C-8	Part of T-3 (1st I-F Trans. AM)			
C-12, C-13	Part of T-5 (2nd I-F Trans. AM)			
C-14, C-15	Part of T-4 (2nd I-F Trans. FM)			
C-16A, C-16B	47X112	50-50 mmf		Dual Mica
C-18	Part of T-6 (Discriminator Trans.)			
C-19	47X492	2700 mmf		Molded Mica
C-20, C-35	47X468	220 mmf		Ceramic
C-21	45X361	5 mf	100 V	Dry Electrolytic
C-22, C-42	47X557	2.2 mmf		Ceramic
C-23	47X558	30 mmf		Ceramic
C-24	47X516	20 mmf		Ceramic
C-25	17A255	1-8 mmf		Trimmer
C-26	B66503	.05 mf	200 V	Tubular
C-28A	45X360	20 mf	20 V	Dry Electrolytic
C-28B		40 mf	150 V	
C-28C		40 mf	200 V	
C-29	H66102	.001 mf	800 V	Tubular
C-30	47X470	330 mmf		Molded Mica
C-31	47X508	500 mmf		Ceramic
C-32A, C-32B	76X4	100 mmf		Dual Ceramic
C-33	B66403	.04 mf	200 V	Tubular
C-34	D66502	.005 mf	400 V	Tubular
C-36	B66402	.004 mf	200 V	Tubular
C-37	D66104	.1 mf	400 V	Tubular
C-38	D66203	.02 mf	400 V	Tubular
C-39, C-41	Part of C-1 (Gang Condenser)			
C-40	47X471	68 mmf		Ceramic

RESISTORS

		Ohms	Watts	
R-1	B85470	47	0.5	Carbon
R-2, R-3, R-6	B85102	1000	0.5	Carbon
R-4, R-8	B84680	68	0.5	Carbon
R-5, R-12, R-13	B84682	6800	0.5	Carbon
R-7, R-25	B85473	47 K	0.5	Carbon
R-9	B85222	2200	0.5	Carbon
R-10	B85273	27 K	0.5	Carbon
R-11	43X233	3.6	0.5	Wirewound
R-14, R-16	B85104	100	0.5	Carbon
R-15	B85223	22 K	0.5	Carbon
R-17	B84221	220	0.5	Carbon
R-18, R-19, R-24, R-26	B85474	470 K	0.5	Carbon
R-20	B85153	15 K	0.5	Carbon
R-21	36X372	.5 meg		Volume Control
R-23	40X285	3 meg.		Tone Control
R-27	B85106	10 meg.	0.5	Carbon
R-28	D84821	820	2.0	Carbon
R-29	B85105	1 meg.	0.5	Carbon
R-30	B84271	270	0.5	Carbon
R-31	B85225	2.2 meg.	0.5	Carbon

TRANSFORMERS AND COILS

L-1	35A5	Insulated Choke
L-2	9A2068	Parasitic Choke
L-3	35A9	Insulated Choke
L-4	35A8	Insulated Choke
T-1	9A2099	"B" Range Loop Antenna
T-2	9A2060	1st I-F Trans. (FM)
T-3	9A2062	1st I-F Trans. (AM)
T-4	9A2061	2nd I-F Trans. (FM)
T-5	9A2063	2nd I-F Trans. (AM)
T-6	9A2064	Discriminator Transformer
T-7	9A2065	Oscillator Coil (AM)
T-8	9A2067	Oscillator Coil (FM)
T-9	51X134	Output Transformer
T-10	9A2002	Dipole Antenna
T-11	53X291	Power Transformer
T-12	9A2066	Antenna Coil (FM)

DIAL AND DRIVE ASSEMBLY

58X733	Dial Glass
15X260	Pointer
19X192	"C" Washer (Mtg. Drive Shaft)
6X66	Rubber Grommet
25X1616	Dial Bracket
28X113	Drive Cord Tension Spring
7A103	No. 47 Pilot Light
7A199	Pilot Light Socket Assembly
10X38	Drive Cord Assembly
26X486	Drive Shaft

TYPE G.I. — 28A169 RECORD CHANGER PARTS

G.I. 69-73657	Tone Arm
G.I. 55-73613	Plastic Stabilizer
G.I. 28A755782	Idler Wheel Assembly
G.I. 56-76507	Motor, 3 speed, 60 cycles, 105-125 Volts A.C.
E-V No. 33-4	Crystal Cartridge, complete with needle *Needle only

*When ordering needles, specify part number and letter stamped on Cartridge.

69X2141

©John F. Rider

Compliments of www.nucow.com

MODEL D1046A

CHECK YOUR LINE VOLTAGE

Unless otherwise marked this radio must be operated on a supply of 105-125 volts AC, 60 cycles only. Do not connect the radio to a wall outlet unless certain that the power supply is correct for the receiver. If in doubt, telephone your local power company before inserting the plug. Radios of this model which are to be used on other power supplies are marked accordingly.

FM BAND

88 - 108 MEGACYCLES — This band is calibrated in megacycles and covers the newly allocated frequency modulation band of 88-108 megacycles. Reception in this band is usually limited to "line of sight" distances between the transmitting and receiving antennas. This is normally up to about 30 miles with approximately 45 miles being the extreme range.

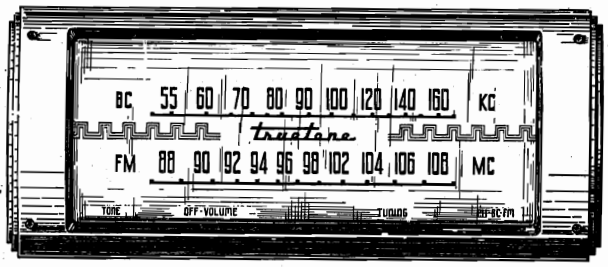

BROADCAST BAND

540 - 1600 KILOCYCLES — This band is calibrated in channel numbers. To obtain the kilocycle number add a zero to the number on the dial scale.

TONE CONTROL

Use this knob to adjust the tone of the receiver. When turned clockwise the high notes will predominate and when turned counterclockwise a deep bass effect will result.

BAND AND PHONO RADIO SWITCH

This control has three positions, FM, Broadcast and Phono. In the Phono position, the electrical circuits are connected for the reproduction of records played on the Automatic Record Changer.

ON-OFF SWITCH AND VOLUME CONTROL

The On-Off switch and Volume control are operated by the same knob. To turn the radio on, turn the knob clockwise until a click is heard. Allow approximately 30 seconds for the tubes to heat. Then continue to turn the knob clockwise to increase the volume.

TUNING KNOB

Use this control to tune in the desired station. Turn the knob until the station is heard. Then slowly rotate it back and forth until the signal is clearest and strongest. If signal is too strong, reduce it by means of the volume control, not by using the tuning knob.

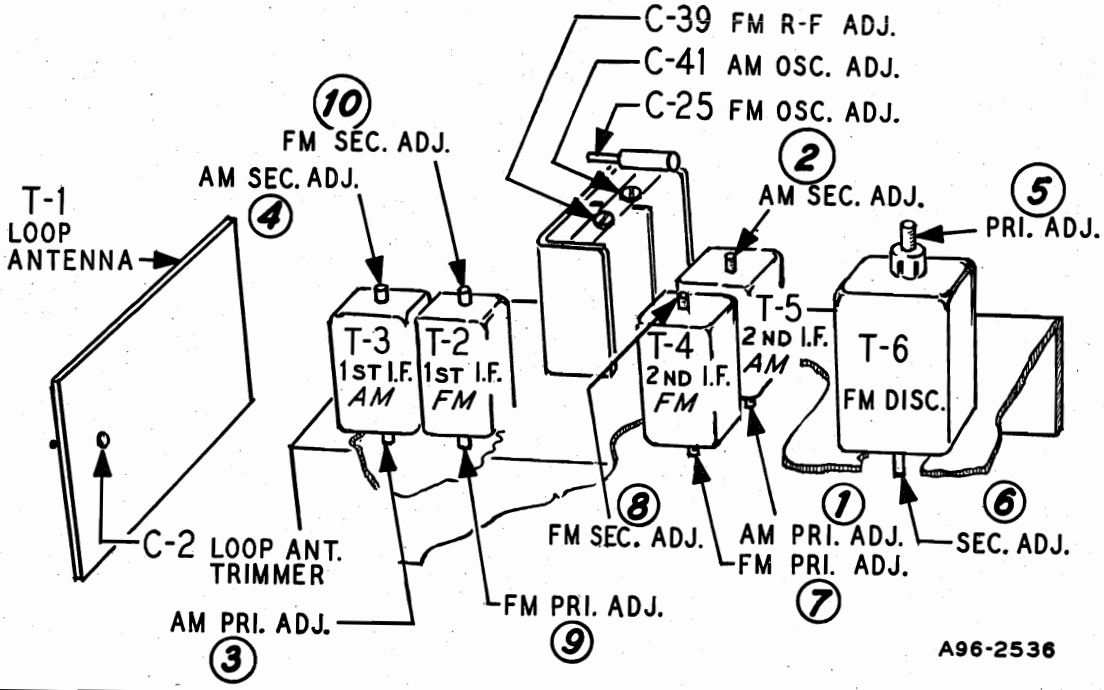

©John F. Rider

Compliments of www.nucow.com

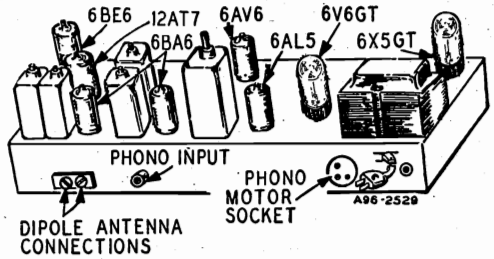

DRIVE CORD REPLACEMENT

Replacement of the drive cord may be accomplished as shown in the illustration. For this purpose use the new drive cord assembly listed in the Replacement Parts List. Turn the gang condenser until the plates are fully meshed Then install the string as shown, winding three turns counter-clockwise around the tuning shaft with the turns progressing away from the chassis. After the cord is installed, rotate the tuning shaft several times in order to take up any slack in the cord.

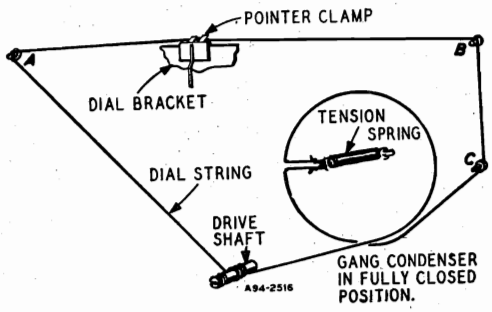

ELECTRICAL SPECIFICATIONS

Power Output—
117 volts AC—40 watts
60 watts phono operating

Power Output—
1.9 watts maximum
.8 watts 10% distortion

Speaker—8 inch PM dynamic

Frequency Ranges—
Broadcast 540-1600 KC
Frequency modulation 88-108 MC

Intermediate Frequency—
AM 455 KC — FM 10.7 MC

Selectivity — AM — 45 KC broad at 1000 times signal, measured at 1000 KC

I.F. FM—200 KC broad at 2 times down

I.F. FM—950 KC broad at 200 times down

AM Sensitivity—(For .5 watt output with external antenna)
25 microvolts average

FM Sensitivity—(For .5 watt output)
25 microvolts average

ALIGNMENT PROCEDURES

AM STAGES

The following is required for aligning:
An All Wave Signal Generator Which Will Provide an Accurately Calibrated Signal at the Test Frequencies as Listed.
Output Indicating Meter, Non-Metallic Screwdriver, Dummy Antennas — .1 mf, and 50mmf.

Volume Control Maximum all Adjustments.
Connect Radio Chassis to Ground Post of Signal Generator with a Short Heavy Lead.
Allow Chassis and Signal Generator to "Heat Up" for Several Minutes.

SIGNAL GENERATOR						
FREQUENCY SETTING	CONNECT GENERATOR OUTPUT TO	THROUGH DUMMY ANTENNA	CONNECT GROUND TO	GANG CONDENSER SETTING	ADJUST	ADJUST FOR
455 KC	Control Grid 1st 6BA6 Pin No. 1	.1 mf	Chassis Base	Rotor Fully Open	2nd I.F. Pri. (1) and Sec. (2)	Maximum Output
455 KC	Control Grid 6BE6 Pin No. 7 1st Det.	.1 mf	Chassis Base	Rotor Fully Open	1st I.F. Pri. (3) and Sec. (4)	Maximum Output
455 KC	Control Grid 6BE6 Pin No. 7	.1 mf	Chassis Base	Rotor Fully Open	2nd I-F Pri. (1) and Sec. (2)	Maximum Output
1620 KC	Control Grid 6BE6 Pin No. 7	.1 mf	Chassis Base	Rotor Fully Open	Oscillator C-41	Maximum Output
1400 KC	External Antenna Lead	50 mmf	Chassis Base	Turn Rotor to Max. Output. Set Pointer to 1400 KC See Note A	Antenna C-2	Maximum Output

NOTE A—If the pointer is not at 1400 KC on the dial, reset pointer to the 1400 KC mark on the dial scale.

©John F. Rider
Compliments of www.nucow.com

MODEL D1046A

FM STAGES

The following is required for aligning:

An accurately calibrated signal generator providing unmodulated signals at the test frequencies listed below.

Non-metallic screwdriver.

Dummy Antennas and I-F Loading Resistor—2500 mmf, 300 ohms

Zero center scale DC vacuum tube voltmeter having a range of approximately 3 volts.
(If a zero center scale meter is not available, a standard scale vacuum tube voltmeter may be used by reversing the meter connections for negative readings).
Allow chassis and signal generator to "Heat Up" for several minutes.

	SIGNAL GENERATOR						
	FREQUENCY SETTING	CONNECT GENERATOR OUTPUT TO	THROUGH DUMMY ANTENNA	BAND SWITCH SETTING	GANG CONDENSER SETTING	ADJUST	ADJUST FOR
Discriminator	10.7 MC	6BA6 2nd I-F Pin 1 and Chassis	2500 mmf	FM	Rotor Fully Open	Disc. Pri. (5) Note A	Maximum Deflection
	10.7 MC	6BA6 2nd I-F Pin 1 and Chassis	2500 mmf	FM	Rotor Fully Open	Disc. Sec. (6) Note B	
I-F	10.7 MC Note C	6BA6 1st I-F Pin 1 and Chassis	2500 mmf	FM	Rotor Fully Open	2nd I-F Pri. (7) Sec. (8) Note D	Maximum Deflection
Discriminator	10.7 MC	6BA6 1st I-F Pin 1 and Chassis	2500 mmf	FM	Rotor Fully Open	Disc. Pri. (5) Note D	Maximum Deflection
I-F	10.7 MC	Junction C-32A & B (Dual 100 mmf cond.) And chassis	2500 mmf	FM	Rotor Fully Open	1st I-F Pri. (9) & Sec. (10) 2nd I-F Pri. (7) & Sec. (8) Disc. Pri. (5) In Order Shown Note D	Maximum Deflection
	10.7 MC	Same as above	2500 mmf	FM	Rotor Fully Open	Disc. Sec. (6) Note B	Maximum Deflection
RECHECK I-F ADJUSTMENTS IN ORDER GIVEN							
Oscillator	108.5	Disconnect dipole antenna and connect generator to dipole terminals with resistor in series.	300 ohms	FM	Rotor Fully Open	Osc. C-25	Maximum Deflection
Antenna	104.5	Same as above	300 ohms	FM	Tune rotor for max. AVC voltage	Ant. C-39	Maximum Deflection
RECHECK ANTENNA & OSC. ADJUSTMENTS IN ORDER GIVEN							

FM ALIGNMENT NOTES

NOTE A—The zero center scale DC vacuum tube voltmeter is to be connected between chassis ground and the AVC line. A signal of .1 volt must be fed into the receiver for this adjustment.
Note output voltage on the zero center DC vacuum tube voltmeter.

NOTE B—Disconnect zero center DC vacuum tube voltmeter from AVC and connect it at the audio takeoff point at the 27 K ohm resistor (R-10) and its junction with the terminal strip. Adjust for zero voltage indication.

NOTE C—AM I-F coils must be aligned before attempting to align the FM I-F coils.

NOTE D—Connect zero center DC vacuum tube voltmeter as in Note A. Adjust input to give same output on the zero center DC vacuum tube voltmeter as in Note A.

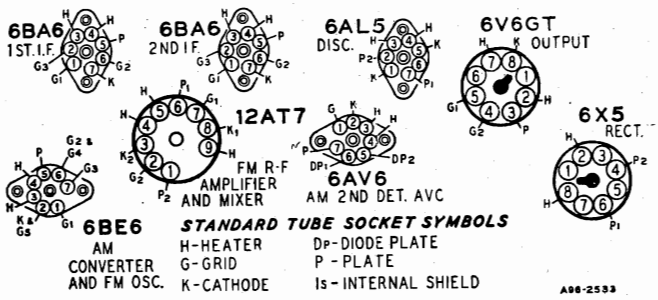

TUBE SOCKET VOLTAGES

Socket voltages are shown on the schematic diagram at the tube socket terminals. All voltages are between the socket terminal and chassis ground. Plate, screen and cathode voltages were taken with a 1000 ohm-per-volt meter with a 300 volt scale used for plate and screen voltages. Audio grid voltages were read with a vacuum tube volt-meter. Conditions of measurement are:

Line voltage .....117 Volts AC
Signal Input .....None
A Variation of ±10% is usually permissible.

©John F. Rider

Compliments of www.nucow.com

MODEL D1046A

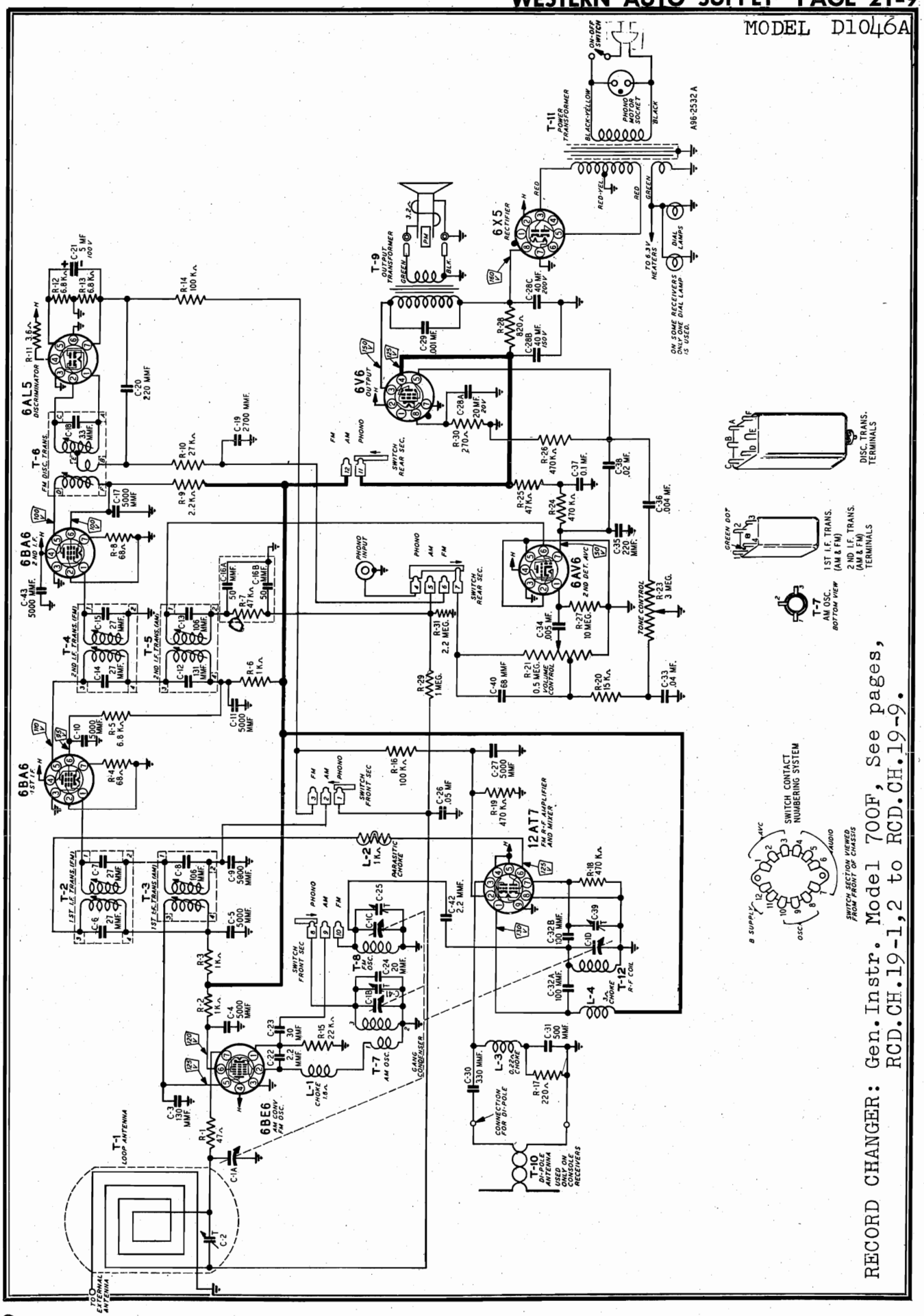

RECORD CHANGER: Gen. Instr. Model 700F, See pages, RCD.CH.19-1,2 to RCD.CH.19-9.

©John F. Rider

Compliments of www.nucow.com

MODEL D1046A

REPLACEMENT PARTS LIST

NOTICE: There is a model number label on the chassis. This label identifies the radio as to chassis, dial and issue letter. When ordering parts or writing, give ALL information on this label.

MISCELLANEOUS

12A477	8" P.M. Speaker
4X1073	Escutcheon
10X751	Knob
13X546	Line Cord & Plug Assembly
2A395	Band Change Switch
3A303	Molded Octal Tube Socket
3A305	Phono Socket
3A426	Tube Socket (Miniature)
3A443	Tube Socket (6BE6)
3A304	Phono Motor Socket
3A427	Tube Socket (12AT7)
	Cabinet No. 952

CAPACITORS

C-1	14A209	Gang Condenser Assembly		
C-2	17A256	2-24 mmf		Trimmer
C-3	47X559	130 mmf		Ceramic
C-4, C-5, C-9, C-10, C-11, C-17, C-27, C-43	47X507	5000 mmf		Ceramic
C-6, C-7	Part of T-2 (1st I-F Trans. FM)			
C-8	Part of T-3 (1st I-F Trans. AM)			
C-12, C-13	Part of T-5 (2nd I-F Trans. AM)			
C-14, C-15	Part of T-4 (2nd I-F Trans. FM)			
C-16A, C-16B	47X112	50-50 mmf		Dual Mica
C-18	Part of T-6 (Discriminator Trans.)			
C-19	47X492	2700 mmf		Molded Mica
C-20, C-35	47X468	220 mmf		Ceramic
C-21	45X361	5 mf	100 V	Dry Electrolytic
C-22, C-42	47X557	2.2 mmf		Ceramic
C-23	47X558	30 mmf		Ceramic
C-24	47X516	20 mmf		Ceramic
C-25	17A255	1-8 mmf		Trimmer
C-26	B66503	.05 mf	200 V	Tubular
C-28A	45X360	20 mf	20 V	Dry Electrolytic
C-28B		40 mf	150 V	
C-28C		40 mf	200 V	
C-29	H66102	.001 mf	800 V	Tubular
C-30	47X470	330 mmf		Molded Mica
C-31	47X508	500 mmf		Ceramic
C-32A, C-32B	76X4	100 mmf		Dual Ceramic
C-33	B66403	.04 mf	200 V	Tubular
C-34	D66502	.005 mf	400 V	Tubular
C-36	B66402	.004 mf	200 V	Tubular
C-37	D66104	.1 mf	400 V	Tubular
C-38	D66203	.02 mf	400 V	Tubular
C-39, C-41	Part of C-1 (Gang Condenser)			
C-40	47X471	68 mmf		Ceramic

RESISTORS

		Ohms	Watts	
R-1	B85470	47	0.5	Carbon
R-2, R-3, R-6	B85102	1000	0.5	Carbon
R-4, R-8	B84680	68	0.5	Carbon
R-5, R-12, R-13	B84682	6800	0.5	Carbon
R-7, R-25	B85473	47 K	0.5	Carbon
R-9	B85222	2200	0.5	Carbon
R-10	B85273	27 K	0.5	Carbon
R-11	43X233	3.6	0.5	Wirewound
R-14, R-16	B85104	100 K	0.5	Carbon
R-15	B85223	22 K	0.5	Carbon
R-17	B84221	220	0.5	Carbon
R-18, R-19, R-24, R-26	B85474	470 K	0.5	Carbon
R-20	B85153	15 K	0.5	Carbon
R-21	36X381	.5 meg		Volume Control
R-23	40X289	3 meg.		Tone Control
R-27	B85106	10 meg.	0.5	Carbon
R-28	D84821	820	2.0	Carbon
R-29	B85105	1 meg.	0.5	Carbon
R-30	B84271	270	0.5	Carbon
R-31	B85225	2.2 meg.	0.5	Carbon

TRANSFORMERS AND COILS

L-1	35A5	Insulated Choke
L-2	9A2068	Parasitic Choke
L-3	35A9	Insulated Choke
L-4	35A8	Insulated Choke
T-1	9A1972	"B" Range Loop Antenna
T-2	9A2060	1st I-F Trans. (FM)
T-3	9A2062	1st I-F Trans. (AM)
T-4	9A2061	2nd I-F Trans. (FM)
T-5	9A2063	2nd I-F Trans. (AM)
T-6	9A2064	Discriminator Transformer
T-7	9A2065	Oscillator Coil (AM)
T-8	9A2067	Oscillator Coil (FM)
T-9	51X134	Output Transformer
T-10	9A2003	Dipole Antenna
T-11	53X291	Power Transformer
T-12	9A2066	Antenna Coil (FM)

DIAL AND DRIVE ASSEMBLY

58X730	Dial Glass
15X254	Pointer
19X192	"C" Washer (Mtg. Drive Shaft)
6X66	Rubber Grommet
25X1610	Dial Bracket
28X113	Drive Cord Tension Spring
7A103	No. 47 Pilot Light
7A215	Pilot Light Socket Assembly
10X38	Drive Cord Assembly
26X510	Drive Shaft

TYPE G.I. — 28A168 RECORD CHANGER PARTS

G.I. 69-75506	Tone Arm
G.I. 55-73613	Plastic Stabilizer
G.I. 28A755782	Idler Wheel Assembly
G.I. 56-76507	Motor, 3 speed, 60 cycles, 105-125 Volts A.C.
ASTATIC LT3D	Crystal Cartridge
	*Needle, Regular
	*Needle, Microgroove (Red)

*When ordering needles, specify part number and letter stamped on Cartridge.

69X2080

©John F. Rider

Compliments of www.nucow.com

MODELS D2017, D2018

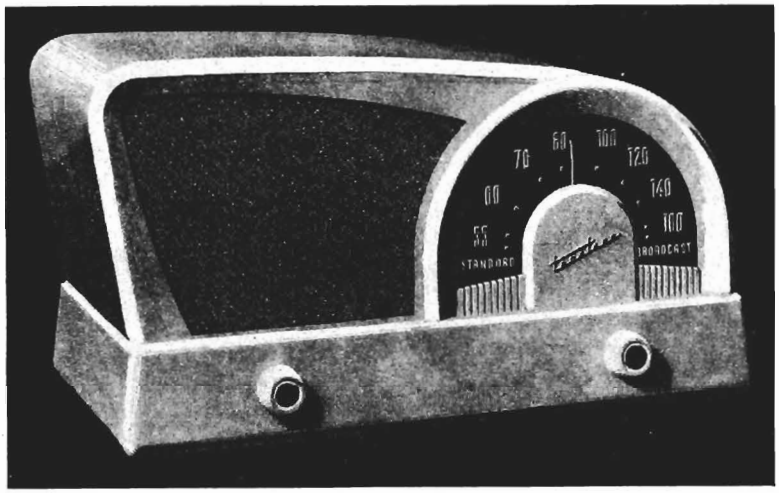

SERVICE DATA

ALIGNMENT PROCEDURE

The following equipment is required for aligning:
Signal Generator which will provide an accurately calibrated signal at the test frequencies as listed.
Output Indicating Meter: Non-Metallic Screwdriver.
Dummy Antennas—.1 mf., 50 mmf.
Volume Control—Maximum All Adjustments.
Allow Chassis and Signal Generator to "Heat Up" for several Minutes.

SIGNAL GENERATOR			DUMMY ANTENNA	GANG CONDENSER SETTING	ADJUST TUNING SLUGS (I-F) AND TRIMMERS TO MAXIMUM
FREQUENCY SETTING	ANTENNA CONNECTION	GROUND CONNECTION			
455 KC	Control Grid 12BA6—1.F. Prong No. 1	"X" Point	.1 mf.	Turn Rotor to full open	2nd I.F. Pri. (1) & Sec. (2)
455 KC	Control Grid 12BE6—1st Det. Prong No. 7	"X" Point	.1 mt.	Turn Rotor to full open	1st I.F. Pri. (3) & Sec. (4)
1620 KC	Control Grid 12BE6—1st Det. Prong No. 7	"X" Point	.1 mf.	Turn Rotor to full open	Oscillator (C-4)
1400 KC	External Antenna Clip On Loop	Chassis	50 mmf.	Tune Receiver to 1400 KC.	Antenna (C-3) Trimmer

SPECIFICATIONS

6 Tube Superheterodyne, including Rectifier Tube.
Tuning Frequency Range .....540 to 1600 KC
Power Consumption .....35 watts (At 117 volts AC)
Power Output..1.5 watt maximum, .9 watt (10% distortion)
Intermediate Frequency .....455 KC
Sensitivity .....10 Microvolts Average
Selectivity .....50 KC Wide at 1000 Times Signal
Speaker .....5¼" PM Dynamic

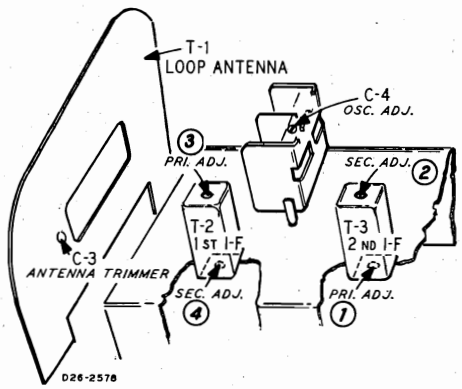

DRIVE CORD REPLACEMENT

Turn the large drive pulley to the fully closed position. Use a new 10x75 drive cord assembly or a piece of cord 15 inches long and fasten one end to the tension spring and fasten the other end of the spring to the drive pulley. Install the cord as shown in the illustration. Wind 2¾ turns counterclockwise around the tuning shaft with the turns progressing toward the front of the chassis. After string is installed, stretch the tension spring and fasten free end of cord to spring.

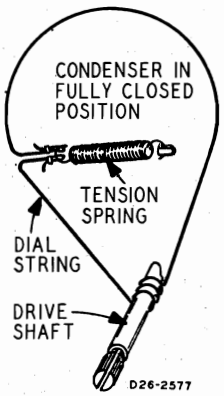

©John F. Rider

Compliments of www.nucow.com

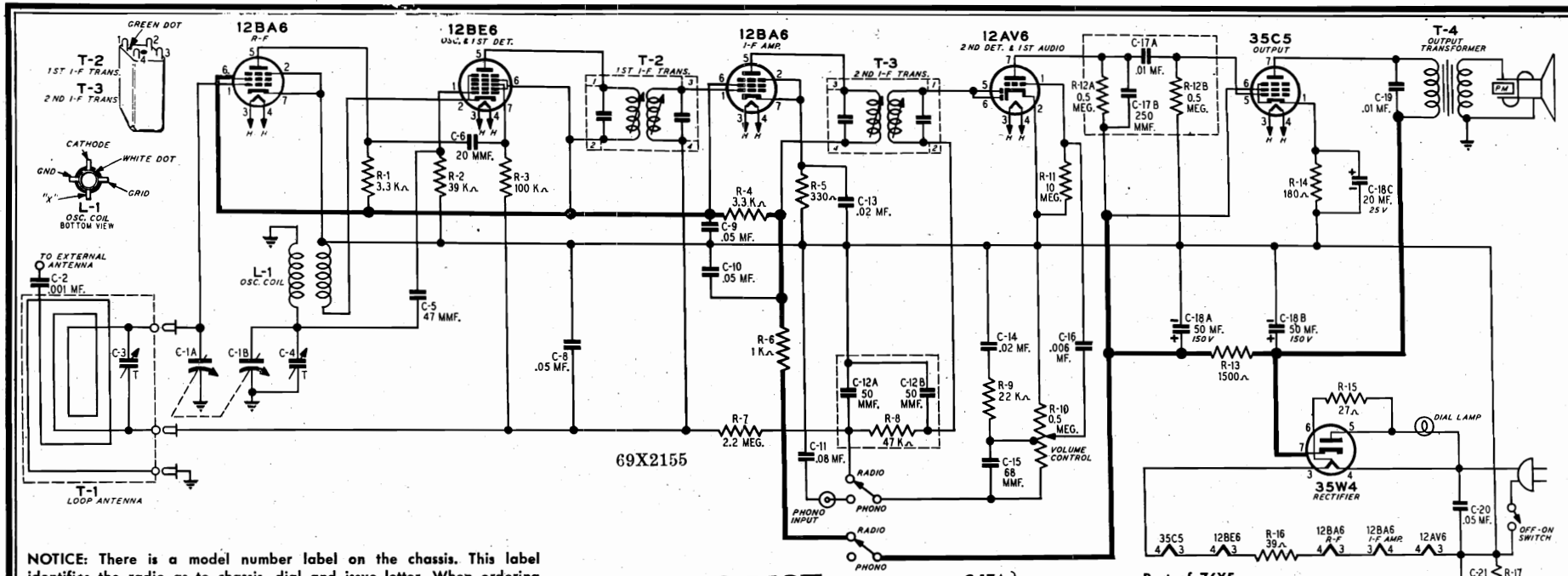

NOTICE: There is a model number label on the chassis. This label identifies the radio as to chassis, dial and issue letter. When ordering parts or writing, give ALL information appearing on this label.

PARTS LIST

MISCELLANEOUS

12A499	5-1/4" P.M. Speaker	L-1
76X5	Multiple Resistor-Capacitor Combination	T-1
76X1	Resistor-Capacitor Combination	T-2
2A402	Switch (Phono-Radio)	T-3
3A305	Phono Socket (Single pin)	T-4
3A426	Tube Socket (Miniature)	
32X386	Tube Shield	
14X497	Grille Cloth (Walnut)	
14X500	Grille Cloth (Ivory)	C-1A, C-1B
10A760	Knob (Ivory)	
10A761	Knob (Walnut)	C-2
13X546	Line Cord Assembly	C-3
55X384	Plastic Cabinet (Ivory)	
55X392	Plastic Cabinet (Walnut)	C-4
		C-5
		C-6
		C-8, C-9, C-10

DIAL AND DRIVE ASSEMBLY

58X735	Dial Glass	C-11
15X261	Pointer	C-12A, C-12B
25X1696	Dial Background Bracket	
26X514	Drive Shaft	C-13, C-14
28X113	Drive Cord Tension Spring	
19X192	"C" Washer (Mtg. Drive Shaft)	C-15
10X75	Drive Cord Assembly	C-16
7A103	No. 47 Pilot Light	
7A227	Pilot Light Assembly	

TRANSFORMERS AND COILS

9A2101	Oscillator Coil
9A2102	Loop Antenna
9A2108	1st I-F Transformer
9A2109	2nd I-F Transformer
51X148	Output Transformer

CAPACITORS

14A212	Gang Condenser Assembly			
D65102	.001	400 V	Ceramic	
17A256			Trimmer	
	Part of Gang Condenser			
47X495	47 mmf		Ceramic	
47X516	20 mmf		Ceramic	
B66503	.05 mf	200 V	Tubular	
B66803	.08 mf	200 V	Tubular	
	Part of 76X1 (See Miscellaneous)			
B66203	.02 mf	200 V	Tubular	
47X471	68 mmf		Ceramic	
B66602	.006 mf	200 V	Tubular	
C-17A, C-17B	Part of 76X5 (See Miscellaneous)			
C-18A, C18B, C-18C	45X343	50 mf / 50 mf / 20 mf	150 V / 150 V / 25 V	Dry Electrolytic
C-19	B66103	.01 mf	200 V	Tubular
C-20	D66503	.05 mf	400 V	Tubular
C-21	B66204	.2 mf	200 V	Tubular

RESISTORS

		Ohms	Watts	
R-1, R-4	B84332	3.3 K	0.5	Carbon
R-2	B85393	39 K	0.5	Carbon
R-3	B85104	100 K	0.5	Carbon
R-5	B84331	330	0.5	Carbon
R-6	B84102	1 K	0.5	Carbon
R-7	B85225	2.2 meg.	0.5	Carbon
R-8		Part of 76X1 (See Miscellaneous)		
R-9	B85223	22 K	0.5	Carbon
R-10	36X385	.5 meg		Volume Control
R-11	B85105	10 meg.	0.5	Carbon
R-12A, R-12B		Part of 76X5 (See Miscellaneous)		
R-13	C84152	1500	1.0	Carbon
R-14	B84181	180	0.5	Carbon
R-15	B83270	27	0.5	Carbon
R-16	D84390	39	2.0	Carbon
R-17	B84274	270 K	0.5	Carbon

©John F. Rider

Compliments of www.nucow.com

MODELS D2017, D2018

TUBE SOCKET VOLTAGES

Socket voltages are shown on the Bottom Socket diagram at the tube socket terminals. All voltages are between the socket terminal and chassis ground. Plate, screen and cathode voltages were taken with a 1000 ohm-per-volt meter with a 300 volt scale used for plate and screen voltages. Audio grid voltages were read with a vacuum tube volt-meter. Conditions of measurement are:

Line voltage .....117 Volts AC

Signal Input .....None

A Variation of ±10% is usually permissible.

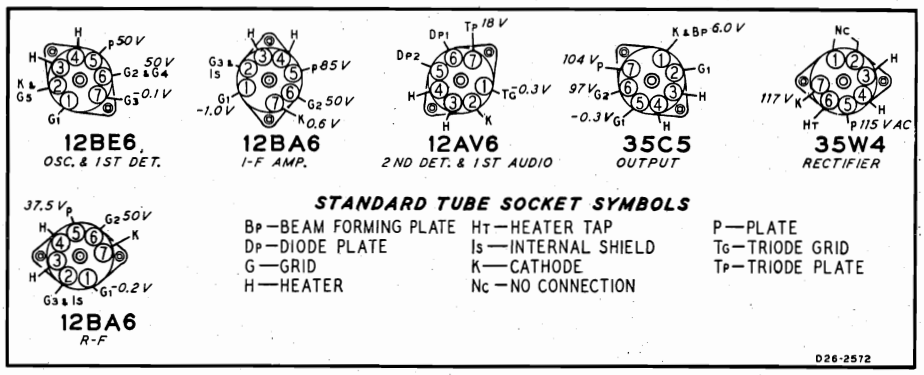

TRUETONE MODELS D2017 & D2018
ISSUE "A"

The circuit of the 35W4 rectifier tube has been modified to reduce hum and to lengthen the life of the pilot light lamp. A 1500 ohm resistor R-18 was also added to the circuit. A partial schematic incorporating these changes is shown below. Due to these changes the voltage reading on Pin #7 of the 35C5 output tube now reads 97 volts instead of 104 volts as shown on the bottom socket voltage chart.

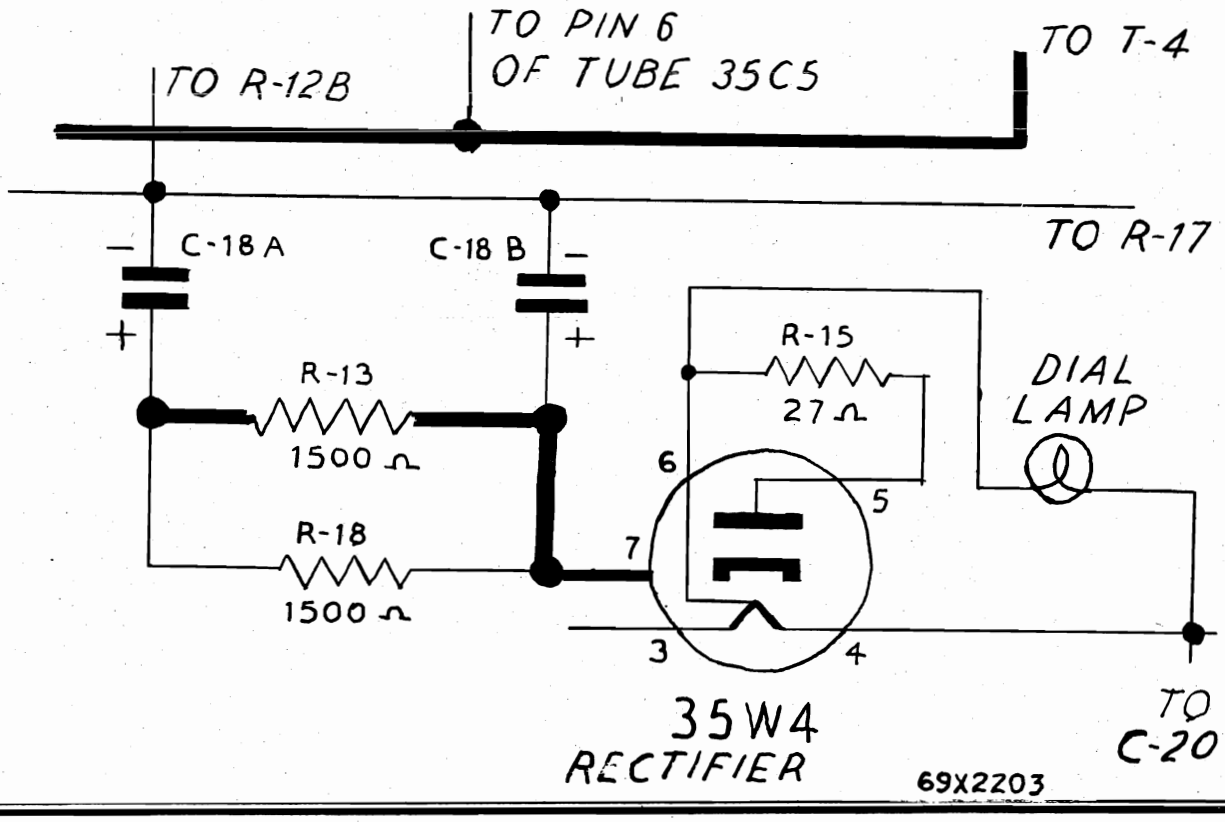

©John F. Rider

Compliments of www.nucow.com

MODELS D2017B, D2018B

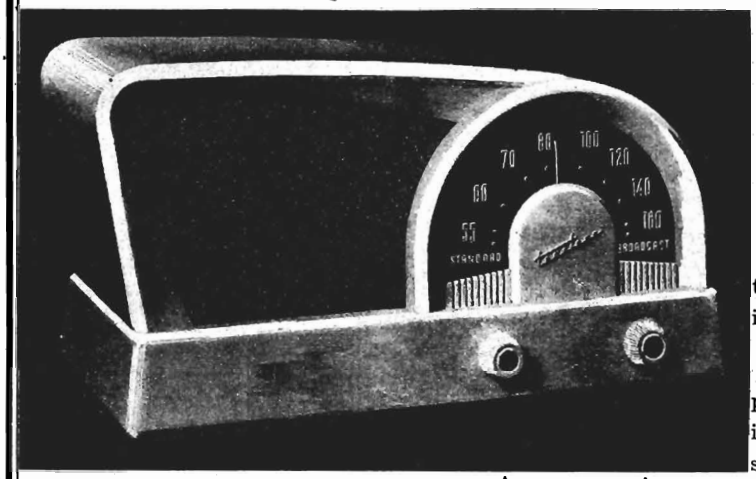

CHECK YOUR LINE VOLTAGE

Unless otherwise marked, this radio must be operated on a power supply of 105-125 volts AC, 50 to 60 cycles only, or 105-125 volts DC. Do not connect the radio to the power source until certain that the power supply is correct for the receiver. If in doubt, telephone your local power company before connecting the receiver.

If there appears to be excessive hum when using the radio on AC, reverse the plug. Leave the plug inserted the way which gives the least hum.

When operating the receiver on a DC power supply, if it does not operate within one minute after it is turned on, reverse the power plug in the proper supply outlet.

ON-OFF SWITCH AND VOLUME CONTROL

Turn until the desired station is heard. Then slowly rotate the knob back and forth until the signal is clearest and strongest. If signal is too strong, reduce it by means of the volume control, not by using the tuning knob.

TUNING KNOB

Turn radio on by turning knob to the right. A click will be heard—allow approximately 30 seconds for tubes to heat. Continue to turn the knob to the right until the desired volume level is obtained. To turn radio off, turn knob to left until click is heard.

DIAL SCALE

540 to 1600 Kilocycles

The dial scale is calibrated in channel numbers. To convert these channel numbers to kilocycles add a zero to the dial number. Thus when the dial pointer is at 100 on the dial, the radio is tuned to 1000 kilocycles.

GENERAL INFORMATION

ANTENNA

A Stratoscope Loop Antenna is built on the chassis of this radio. For reception of stations no other antenna or ground is required.

When operating the radio with the built-in loop aerial, directional effects are obtained. Better reception of distant stations and reduction of local interference may be obtained by rotating the radio until the desired signal is at a maximum.

TUBES AND DIAL LAMP

The type designation of each tube is stamped on both the tube and the radio chassis base. The correct position in which each tube must be installed is also shown in the tube position illustration.

All tubes and the dial lamp must be in their sockets to operate the radio.

CAUTION—If the dial lamp burns out do not operate the receiver until after the lamp is replaced, as rectifier tube failure may result. Use ONLY a **number 47 dial lamp.** To remove the dial lamp, push lamp into socket, turn slightly counterclockwise and withdraw from socket.

The tubes in the radio should be checked periodically by taking them out and having them tested. To reach the tubes for servicing, remove the cabinet back from the rear of the receiver. See instructions on cabinet back.

Be sure receiver is turned OFF when checking or replacing tubes, or damage to the receiver may result.

When replacing the tubes, be sure that they are inserted in the proper sockets. To install a tube into a miniature type tube socket, line up the tube prongs with the holes in the socket and then gently push the tube down until it is held firmly in the socket.

Refasten the cabinet back in place before operating the radio.

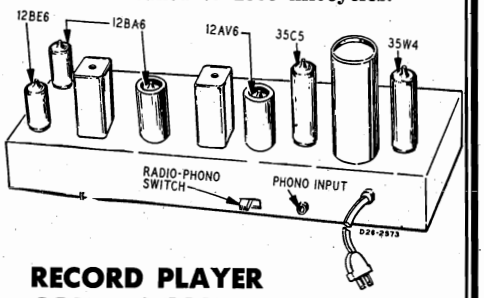

RECORD PLAYER CONNECTION AND PHONO-RADIO SWITCH

This receiver has a PHONO socket located at the rear of the chassis. When it is desired to play records through the radio, insert the connector on the cable of any standard record player or changer into this socket. Then, push the PHONO-RADIO switch to PHONO and use volume control to adjust the sound level.

NOTE—Be sure to push the PHONO-RADIO switch back to the RADIO position when through playing records otherwise the radio will not operate.

IF THE RADIO FAILS TO OPERATE SATISFACTORILY

If, after rechecking the foregoing instructions carefully, the radio still does not appear to operate satisfactorily, proceed as follows:

FIRST—Check Phono-Radio Switch. If the radio does not operate after it has been on for a while, check the PHONO-RADIO switch at the rear of the chassis. For radio operation this switch must be in the RADIO position.

SECOND—Check Power Supply. Be sure there is power at the convenience outlet to which the radio is connected. To determine this, connect a lamp to the outlet and see whether or not the lamp lights.

Check the voltage of the power supply with that shown on the power rating notice on the cabinet back. If the supply is AC, also check the frequency (cycles) on the power rating notice. If there is any doubt concerning the power supply, withdraw the plug from the outlet and consult the local power company before reinserting the plug.

When used on a DC line, if the set does not operate after one minute, reverse the plug.

THIRD — Check Tube Positions. See that the tubes are in the correct sockets as shown in the illustration.

Make certain that the tubes are operating. (Glass tubes will light very dimly.)

FOURTH—Test Tubes. Remove the tubes from the radio, take them to your local radio dealer and have them tested either by means of a tube tester or by inserting them in a radio that is operating satisfactorily.

FIFTH—Service. If the radio does not function properly after the above procedure has been followed and the tubes have been tested, get in touch with the dealer from whom the radio was purchased or call in a competent radio technician.

©John F. Rider

Compliments of www.nucow.com

SERVICE DATA

MODELS D2017B, D2018B

ALIGNMENT PROCEDURE

The following equipment is required for aligning:
Signal Generator which will provide an accurately calibrated signal at the test frequencies as listed.
Output Indicating Meter: Non-Metallic Screwdriver.
Dummy Antennas—.1 mf., 50 mmf.
Volume Control—Maximum All Adjustments.
Allow Chassis and Signal Generator to "Heat Up" for several Minutes.

SIGNAL GENERATOR			DUMMY ANTENNA	GANG CONDENSER SETTING	ADJUST TUNING SLUGS (I-F) AND TRIMMERS TO MAXIMUM
FREQUENCY SETTING	ANTENNA CONNECTION	GROUND CONNECTION			
455 KC	Control Grid 12BA6—1.F. Prong No. 1	"X" Point	.1 mf.	Turn Rotor to full open	2nd I.F. Pri. (1) & Sec. (2)
455 KC	Control Grid 12BE6—1st Det. Prong No. 7	"X" Point	.1 mf.	Turn Rotor to full open	1st I.F. Pri. (3) & Sec. (4)
1620 KC	Control Grid 12BE6—1st Det. Prong No. 7	"X" Point	.1 mf.	Turn Rotor to full open	Oscillator (C-4)
1400 KC	External Antenna Clip On Loop	Chassis	50 mmf.	Tune Receiver to 1400 KC.	Antenna (C-3) Trimmer

SPECIFICATIONS

6 Tube Superheterodyne, including Rectifier Tube.
Tuning Frequency Range .....540 to 1600 KC
Power Consumption .....35 watts (At 117 volts AC)
Power Output..1.5 watt maximum, .9 watt (10% distortion)
Intermediate Frequency .....455 KC
Sensitivity .....10 Microvolts Average
Selectivity .....50 KC Wide at 1000 Times Signal
Speaker .....5¼" PM Dynamic

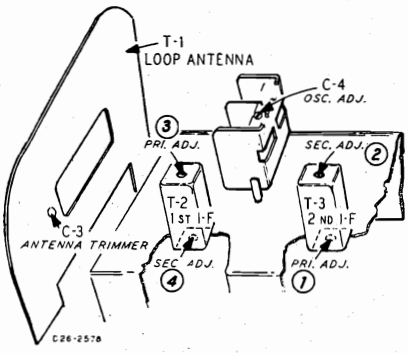

DRIVE CORD REPLACEMENT

Turn the large drive pulley to the fully closed position. Use a new 10x78 drive cord assembly or a piece of cord 16 inches long and fasten one end to the tension spring and fasten the other end of the spring to the drive pulley. Install the cord as shown in the illustration. Wind 2¾ turns counterclockwise around the tuning shaft with the turns progressing toward the front of the chassis. After string is installed, stretch the tension spring and fasten free end of cord to spring.

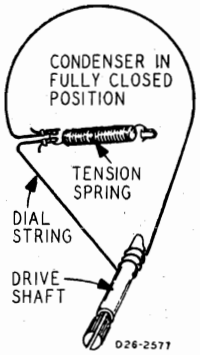

REPLACEMENT PARTS LIST

NOTICE: There is a model number label on the chassis. This label identifies the radio as to chassis, dial and issue letter. When ordering parts or writing, give ALL information appearing on this label.

MISCELLANEOUS

12A499	5-1, 4" P.M. Speaker
76X5	Multiple Resistor-Capacitor Combination
76X1	Resistor-Capacitor Combination
2A402	Switch (Phono-Radio)
3A305	Phono Socket (Single pin)
3A426	Tube Socket (Miniature)
32X403	Tube Shield
14X497	Grille Cloth (Walnut)
14X500	Grille Cloth (Ivory)
10A760	Knob (Ivory)
10A761	Knob (Walnut)
13X546	Line Cord Assembly
55X405	Plastic Cabinet (Ivory)
55X406	Plastic Cabinet (Walnut)
3A458	Tube Socket (12BA6-12AV6)

DIAL AND DRIVE ASSEMBLY

58X735	Dial Glass
15X261	Pointer
25X1696	Dial Background Bracket
26X514	Drive Shaft
28X113	Drive Cord Tension Spring
19X192	"C" Washer (Mtg. Drive Shaft)
10X78	Drive Cord Assembly
7A103	No. 47 Pilot Light
7A227	Pilot Light Assembly

TRANSFORMERS AND COILS

L-1	9A2101	Oscillator Coil
T-1	9A2151	Loop Antenna
T-2	9A2108	1st I-F Transformer
T-3	9A2109	2nd I-F Transformer
T-4	51X148	Output Transformer

CAPACITORS

C-1A / C-1B	14A212	Gang Condenser Assembly		
C-2	D65102	.001	400 V	Ceramic
C-3	17A256			Trimmer
C-4		Part of Gang Condenser		
C-5	47X495	47 mmf		Ceramic
C-6	47X516	20 mmf		Ceramic
C-8				
C-9 / C-10	B66503	.05 mf	200 V	Tubular
C-11	B66803	.08 mf	200 V	Tubular
C-12A / C-12B		Part of 76X1 (See Miscellaneous)		
C-13 / C-14	B66203	.02 mf	200 V	Tubular
C-15	47X471	68 mmf		Ceramic
C-16	B66602	.006 mf	200 V	Tubular
C-17A / C-17B		Part of 76X5 (See Miscellaneous)		
C-18A		50 mf	150 V	
C-18B	45X343	50 mf	150 V	Dry Electrolytic
C-18C		20 mf	25 V	
C-19	B66103	.01 mf	200 V	Tubular
C-20	46X397	.05 mf	400 V	Molded
R-11	B85106	10 meg.	0.5	Carbon

RESISTORS

		Ohms	Watts	
R-1 / R-4	B84332	3.3 K	0.5	Carbon
R-2	B85393	39 K	0.5	Carbon
R-3	B85104	100 K	0.5	Carbon
R-5	B84331	330	0.5	Carbon
R-6	B84102	1 K	0.5	Carbon
R-7	B85225	2.2 meg.	0.5	Carbon
R-8		Part of 76X1 (See Miscellaneous)		
R-9	B85223	22 K	0.5	Carbon
R-10	36X385	.5 meg		Volume Control
R-11	B85106	10 meg.	0.5	Carbon
R-12A / R-12B		Part of 76X5 (See Miscellaneous)		
R-13	D84751	750	2.0	Carbon
R-14	B84181	180	0.5	Carbon
R-15	B83270	27	0.5	Carbon
R-16	D84390	39	2.0	Carbon
R-17	B84274	270 K	0.5	Carbon

©John F. Rider

Compliments of www.nucow.com

MODELS D2017B, D2018B

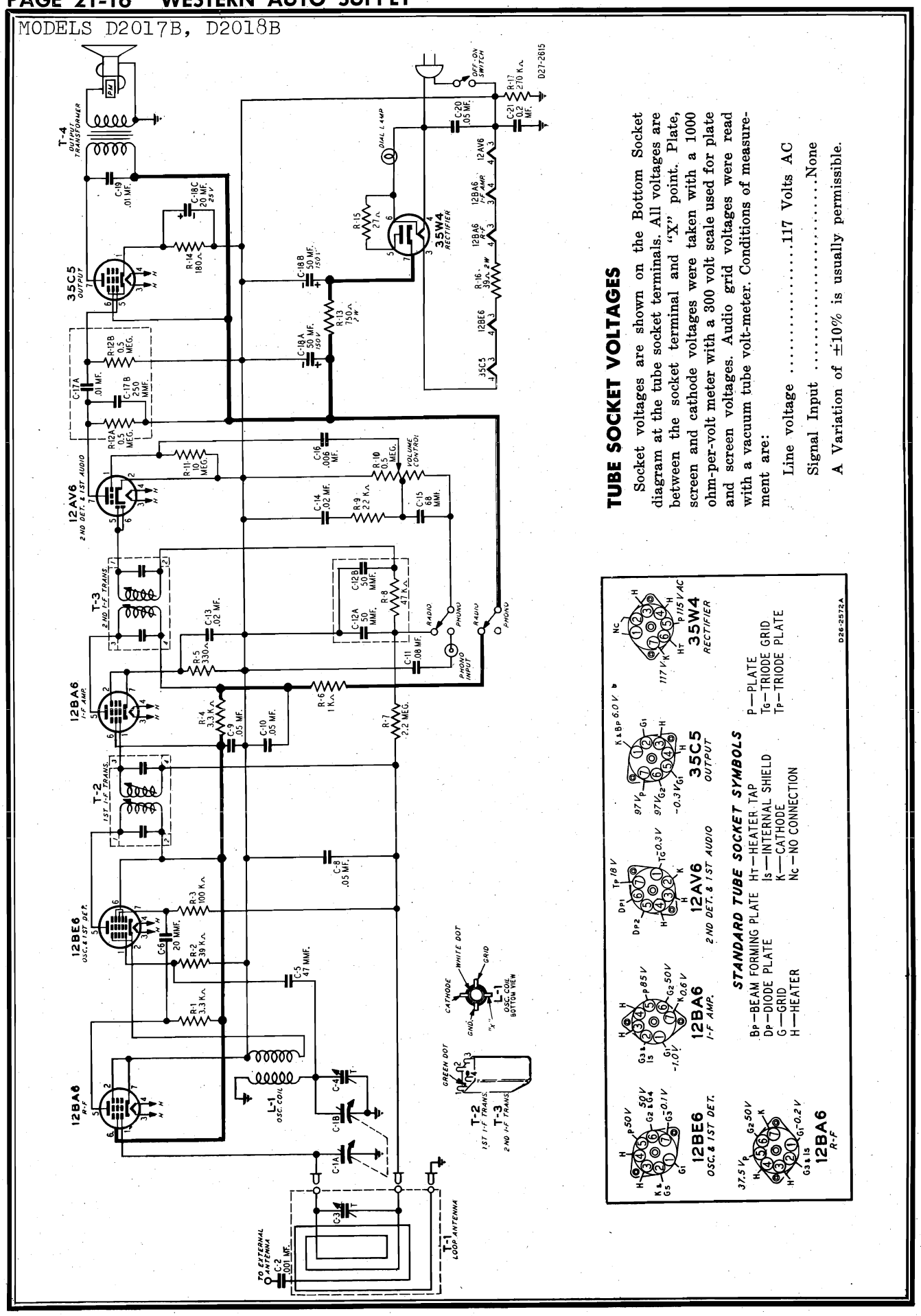

TUBE SOCKET VOLTAGES

Socket voltages are shown on the Bottom Socket diagram at the tube socket terminals. All voltages are between the socket terminal and "X" point. Plate, screen and cathode voltages were taken with a 1000 ohm-per-volt meter with a 300 volt scale used for plate and screen voltages. Audio grid voltages were read with a vacuum tube volt-meter. Conditions of measurement are:

Line voltage .....117 Volts AC

Signal Input .....None

A Variation of ±10% is usually permissible.

©John F. Rider

Compliments of www.nucow.com

MODEL D2022

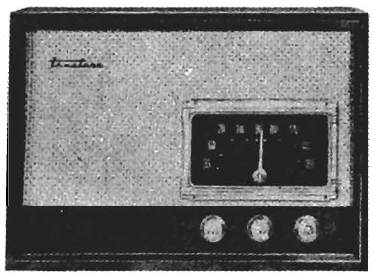

HOW TO OPERATE THE CONTROLS

THE DIAL SCALE
is calibrated to cover frequencies between 540 Kc and 1600 Kc. Add a zero to the dial number to obtain the frequency in kilocycles (Kc). Example: When pointer is set to 70, radio is tuned to 700 Kc. See your newspaper for frequencies of local stations.

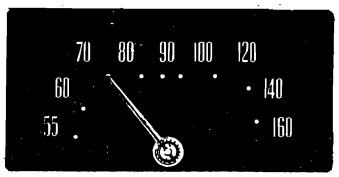

TONE AND RADIO-PHONO SWITCH
Use to switch from radio to phonograph operation; also to select most pleasing tone. Four tone positions are provided, two for RADIO and two for PHONO. Starting with the extreme counter-clockwise setting and turning in a clockwise direction the four positions are as follows:

Radio Bass
Radio Treble
Phono Treble
Phono Bass

The Treble position gives widest tone range and the Bass setting accentuates low tones.

ON-OFF SWITCH AND VOLUME CONTROL
Turn this knob clockwise to turn set on. Continuing to turn clockwise will increase volume.

TUNING CONTROL
Use this control to tune receiver to the desired station.

ALIGNMENT PROCEDURE

1. With the gang condenser fully meshed, the dial pointer should be in a horizontal position at low end of dial, parallel to the bottom edge of dial scale. If it is set incorrectly, merely hold tuning control shaft steady and turn pointer to correct position.
2. Connect an output meter across the speaker voice coil or from the plate of the 6V6GT tube to chassis through a .1 Mfd. condenser.
3. Connect the ground lead of signal generator to the receiver chassis.
4. Set volume control at maximum volume position and use a weak signal from the signal generator.

DUMMY ANT. IN SERIES WITH SIGNAL GENERATOR	CONNECT HIGH SIDE OF SIG. GENERATOR TO	SIGNAL GENERATOR FREQUENCY	RECEIVER DIAL SETTING	TRIMMER NUMBER	TRIMMER DESCRIPTION	TYPE OF ADJUSTMENT
.1 MFD. Condenser	Lug on trimmer No. 6 on antenna section of gang (see figure below for location of trimmer).	455 KC	Any point where it does not affect the signal.	1-2	2nd I.F.	Adjust for maximum output. Then repeat adjustment.
				3-4	1st I.F.	
200 MMFD. Mica Condenser	External Antenna Clip	1400 KC	1400 KC	5	Broadcast Oscillator	Adjust for maximum output.
200 MMFD. Mica Condenser	External Antenna Clip	1400 KC	Tune to 1400 KC generator signal	6	Broadcast Antenna	Adjust for maximum output.

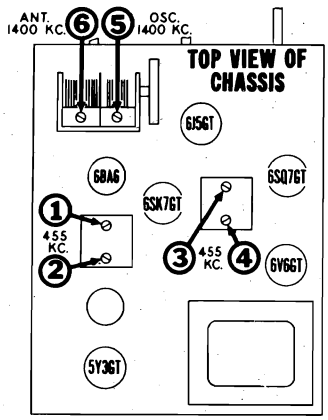

TRIMMER LOCATIONS

DIAL AND POINTER DRIVE CORD ARRANGEMENT
SIDE VIEW

To string dial cord, set gang condenser to fully open position and use following parts:

114955 Clip on end of cord
117057 Cord (3 feet)
119087 Ring for dial cord
505161 Tension spring

To replace and properly position pointer see step 1 in "Alignment Procedure" above.

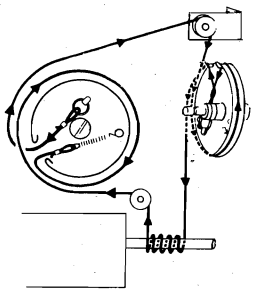

AUDIO OSCILLATION

The audio system of this receiver utilizes a two stage type of inverse feed-back arrangement and should it ever be necessary to replace the speaker or output transformer it is important to maintain a definite phase relationship in the feed-back circuit. If the connections to the output transformer are reversed or if the feed-back connection is made to the wrong side of the output transformer secondary, the system will become regenerative instead of degenerative. Under those conditions audio oscillation may result. If that occurs, oscillation may be prevented by reversing the connections to the speaker.

©John F. Rider

Compliments of www.nucow.com

MODEL D2022

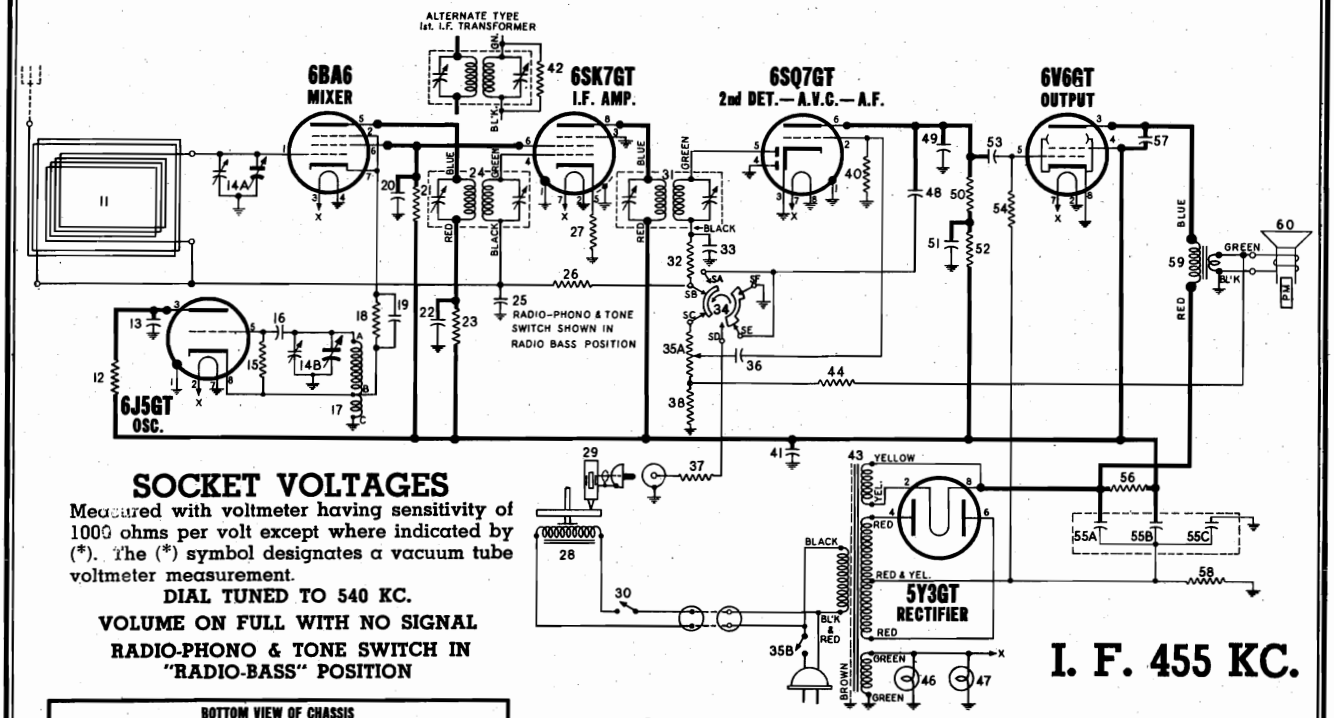

SOCKET VOLTAGES

Measured with voltmeter having sensitivity of 1000 ohms per volt except where indicated by (*). The (*) symbol designates a vacuum tube voltmeter measurement.

DIAL TUNED TO 540 KC.

VOLUME ON FULL WITH NO SIGNAL

RADIO-PHONO & TONE SWITCH IN "RADIO-BASS" POSITION

I. F. 455 KC.

Lettered terminals in illustrations correspond to similarly lettered terminals on the circuit diagram

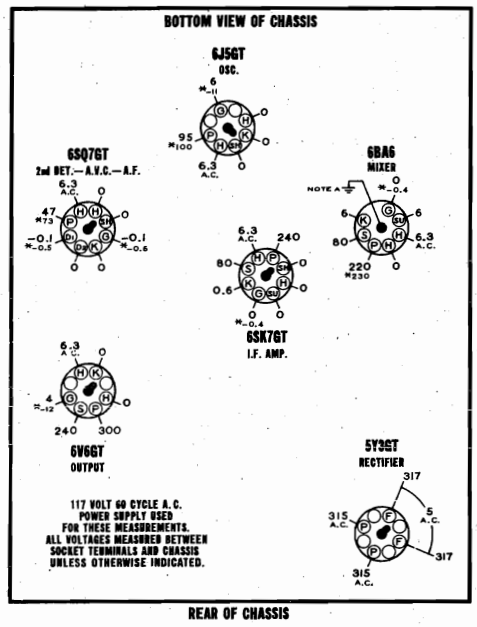

NOTE A: Grounding of center stud on tube socket is necessary to reduce capacity coupling between other pins. Oscillation may result if this ground is omitted.

DIAGRAM NO.	PART NO.	DESCRIPTION
21	502288	Resistor—carbon 47,000 Ohms 1 watt
23	502459	Resistor—carbon 6,800 Ohms ¼ watt
26	502269	Resistor—carbon 3.3 Meg. ¼ watt
27	502264	Resistor—carbon 47 Ohms ± 10% ¼ w.
32	502131	Resistor—carbon 47,000 Ohms ¼ watt
35-A, B	505318	Volume Control 1 Meg. (with switch)
37	510185	Resistor—carbon 470,000 Ohms ½ watt
38	510122	Resistor—carbon 150 ohms ½ watt
40	502468	Resistor—carbon 4.7 Meg. ¼ watt
42	510191	Resistor—carbon 1 Meg. ½ watt
44	510146	Resistor—carbon 3,300 Ohms ½ watt
50	502133	Resistor—carbon 220,000 Ohms ¼ watt
52	502133	Resistor—carbon 220,000 Ohms ¼ watt
54	502134	Resistor—carbon 470,000 Ohms ¼ watt
56	504771	Resistor—carbon 3,300 Ohms 2 watt
58	502293	Resistor—wire wound 200 Ohms ± 10% 2 watt

COILS AND TRANSFORMERS

11	508361	Loop antenna
17	505326	Coil-oscillator
24	502657	Transformer—1st I. F.
31	502658	Transformer—2nd I. F.
43	502174	Transformer—power
59	505305	Transformer—output

OTHER ELECTRICAL PARTS

28	505758	Motor—for type "VM" 508365 record changer 115 volt 60 cyc.
29	506840	Crystal cartridge
30	505269	Switch—"ON-OFF" for type "VM" 508365 record changer
34	505317	Switch—radio-phono
46, 47	110629	Lamp—dial (Mazda #44) 6.3 V. 0.25 A.
60	506657	Speaker P. M. dynamic (6 inch)

MISCELLANEOUS PARTS

116467	Base for mtg. electrolytic condenser
505165	"C" washer
508370	Cabinet
112745	Clip—coil mounting
114955	Clip—retainer on end of dial cord
160326	Clip—retains dial scale
117057	Cord—dial drive (3 ft. required) per ft.
508362	Dial scale (foil)
508350	Escutcheon and dial window assy.
508366	Emblem "Truetone"
505464	Hinge for lid per pair
505344	Knob—tuning
505345	Knob—"VOLUME"
505346	Knob—"RADIO-PHONO"
508372	Lid (less hardware)
505463	Lid support
506841	Needle—phonograph
500966	Plug—Phono. pick-up cable
501031	Plug—Phono. motor cable
505686	Pointer
508365	Record changer
119087	Ring for dial cord
505944	Rubber pad for mtg. chassis
79993	Screw—No. 8x1¼ for mtg. chassis
505716	Screw—set for phono needle
162054	Shaft and drum for pointer
505313	Shaft—tuning
117716	Shield—tube
116690	Socket—octal base
160039	Socket—phono. plug
160392	Socket—octal (rectifier)
505307	Socket and phono. motor cable
505459	Socket—dial lamp
504397	Socket—miniature
505161	Spring—tension
111456	Washer—spring washer for tuning shaft

©John F. Rider

Compliments of www.nucow.com

PARTS LIST

DIA-GRAM NO.	PART NO.	DESCRIPTION
		CONDENSERS
13	502151	Condenser—.01 Mfd. 400 volt
14-A, B	505315	Condenser—variable gang (with drum)
16	502931	Condenser—mica 100 Mmfd. 500 volt
19	502153	Condenser—.05 Mfd. 200 volt
20	502157	Condenser—.05 Mfd. 400 volt
22	502152	Condenser—.02 Mfd. 400 volt
25	502153	Condenser—.05 Mfd. 200 volt
33	502931	Condenser—mica 100 Mmfd. 500 volt
36	502156	Condenser—.004 Mfd. 400 volt
41	502157	Condenser—.05 Mfd. 400 volt
48	512006	Condenser—.005 Mfd. 600 volt
49	502271	Condenser—mica 260 Mmfd. 500 volt
51	502410	Condenser—.1 Mfd. 400 volt
53	502152	Condenser—.02 Mfd. 400 volt
55-A, B, C	502207	Condenser—electrolytic A—20 Mfd. 400 volt B—10 Mfd. 400 volt C—20 Mfd. 25 volt
57	502156	Condenser—.004 Mfd. 400 volt
		RESISTORS
12	502466	Resistor—carbon 33,000 Ohms ± 10% 1 w.
15	502131	Resistor—carbon 47,000 Ohms ¼ watt
18	502128	Resistor—carbon 2,200 Ohms ¼ watt

OSCILLATOR COIL 505326

ALTERNATE TYPES OF RADIO-PHONO & TONE SWITCH 505317

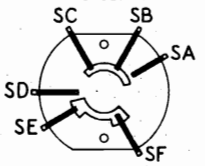

REAR VIEW

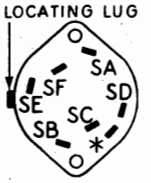

REAR VIEW
*Not used; may serve as wiring junction point.

STAGE GAIN MEASUREMENT PROCEDURE

REQUIRED INSTRUMENTS: The amount of amplification or "gain" of each of the stages of this receiver may be measured with an A.C. Vacuum Tube Voltmeter or a "channel" type instrument containing a tuned and calibrated amplifier.

PROCEDURE: It is exceedingly important to adhere to the procedure outlined below since the accuracy of these measurements will be affected to a considerable extent by the failure to establish proper operating conditions.

1. Be sure that R.F. and I.F. stages are carefully and accurately aligned by utilizing the alignment procedure given above.
2. Connect Signal Generator as shown below.
3. The values of stage gain which are given here were measured with a fixed bias of 3 volts on the control grids of all R.F. and I.F. tubes which are connected to the A.V.C. circuit. Therefore, these values are not intended to indicate the full capability of a stage but they will serve as a convenient basis for determining proper operation. In order to duplicate the fixed bias voltage, connect the negative terminal of a 3 volt battery to A.V.C. at black lead of 1st I.F. and connect the positive battery lead to receiver chassis.

IMPORTANT: Disconnect battery when measuring audio stage gain.

4. Set Signal Generator for operation at 600 Kc with 400 cycle modulation and carefully tune radio receiver to this signal by using an output meter to indicate peak output. If a local station interferes, set generator to a nearby frequency and re-tune the receiver.
5. R.F. and I.F. circuits are slightly de-tuned when contact is made with an instrument probe and this action, which is indicated by a change in the output meter reading, may seriously affect the gain measurement. Therefore, it is important to adjust the associated circuit trimmer for a maximum output meter reading and to set the input signal level to a convenient reference point on the gain measuring instrument while the probe is making contact. After removing the probe it is again necessary to adjust the trimmer so as to obtain the same output meter reading and thereby assure that the signal voltage at the specified point has not changed as a result of circuit de-tuning.
6. When using a "channel" type instrument, carefully tune it for maximum output at desired frequency before making measurements.

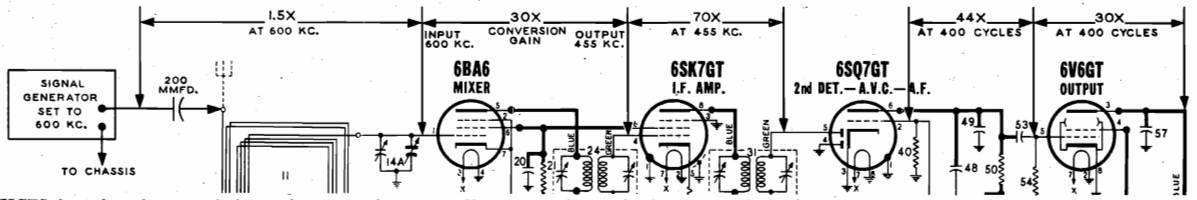

DIFFERENCES in tube characteristics, tolerance of parts, adjustment of tuned circuits and variations in line voltage will influence stage gain. These factors should be given due attention in event the gain of a stage varies extensively from the values shown above.

©John F. Rider
Compliments of www.nucow.com

MODEL D2027A

CHECK YOUR LINE VOLTAGE

Unless otherwise marked this radio must be operated on a supply of 105-125 volts AC, 50 to 60 cycles only. Do not connect the radio to a wall outlet unless certain that the power supply is correct for the receiver. If in doubt, telephone your local power company before inserting the plug. Radios of this model which are to be used on other power supplies are marked accordingly.

FM BAND

88 - 108 MEGACYCLES — This band is calibrated in megacycles and covers the newly allocated frequency modulation band of 88-108 megacycles. Reception in this band is usually limited to "line of sight" distances between the transmitting and receiving antennas. This is normally up to about 30 miles with approximately 45 miles being the extreme range.

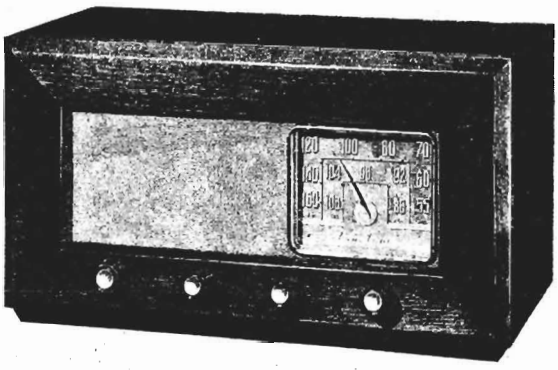

BROADCAST BAND

540 - 1600 KILOCYCLES — This band is calibrated in channel numbers. To obtain the kilocycle number add a zero to the number on the dial scale.

BAND AND PHONO RADIO SWITCH

This control has three positions, FM, Broadcast and Phono. In the Phono position, the electrical circuits are connected for the reproduction of records played on a record player. (See paragraph "Record Player Connection.")

TONE CONTROL

Use this knob to adjust the tone of the receiver. When turned clockwise the high notes will predominate and when turned counterclockwise a deep bass effect will result.

ON-OFF SWITCH AND VOLUME CONTROL

The On-Off switch and Volume control are operated by the same knob. To turn the radio on, turn the knob clockwise until a click is heard. Allow approximately 30 seconds for the tubes to heat. Then continue to turn the knob clockwise to increase the volume.

TUNING KNOB

Use this control to tune in the desired station. Turn the knob until the station is heard. Then slowly rotate it back and forth until the signal is clearest and strongest. If signal is too strong, reduce it by means of the volume control, not by using the tuning knob.

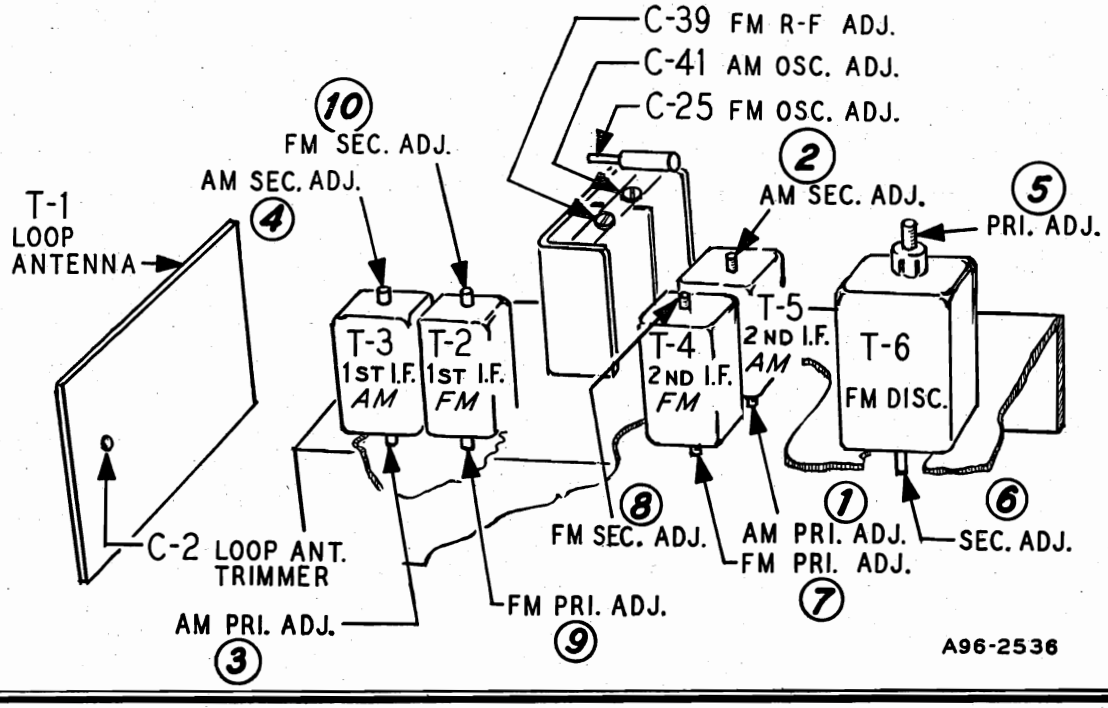

©John F. Rider

Compliments of www.nucow.com

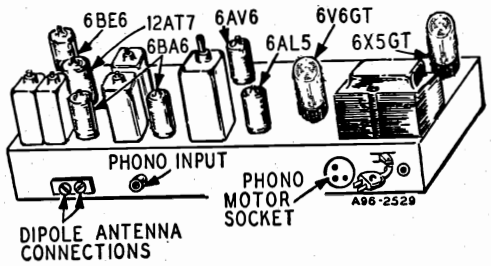

DRIVE CORD REPLACEMENT

Replacement of the drive cord may be accomplished as shown in the illustration. For this purpose use the new drive cord assembly listed in the Replacement Parts List. Turn the gang condenser until the plates are fully meshed Then install the string as shown, winding three turns counter-clockwise around the tuning shaft with the turns progressing away from the chassis. After the cord is installed, rotate the tuning shaft several times in order to take up any slack in the cord.

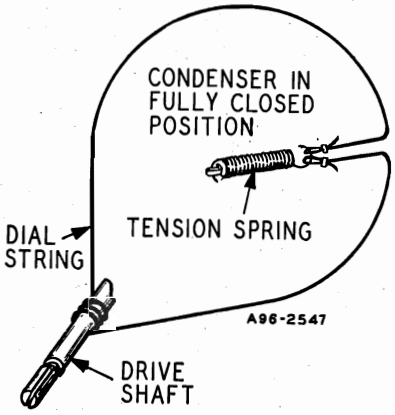

ELECTRICAL SPECIFICATIONS

Power Output—
117 volts AC—40 watts

Power Output—
1.9 watts maximum
.8 watts 10% distortion

Speaker—5¼ inch PM dynamic

Frequency Ranges—
Broadcast 540-1600 KC
Frequency modulation 88-108 MC

Intermediate Frequency—
AM 455 KC — FM 10.7 MC

Selectivity — AM — 45 KC broad at 1000 times signal, measured at 1000 KC

I.F. FM—200 KC broad at 2 times down

I.F. FM—950 KC broad at 200 times down

AM Sensitivity—(For .5 watt output with external antenna)
50 microvolts average

FM Sensitivity—(For .5 watt output)
25 microvolts average

ALIGNMENT PROCEDURES

AM STAGES

The following is required for aligning:
An All Wave Signal Generator Which Will Provide an Accurately Calibrated Signal at the Test Frequencies as Listed.
Output Indicating Meter, Non-Metallic Screwdriver, Dummy Antennas — .1 mf, and 50mmf.

Volume Control Maximum all Adjustments.
Connect Radio Chassis to Ground Post of Signal Generator with a Short Heavy Lead.
Allow Chassis and Signal Generator to "Heat Up" for Several Minutes.

SIGNAL GENERATOR						
FREQUENCY SETTING	CONNECT GENERATOR OUTPUT TO	THROUGH DUMMY ANTENNA	CONNECT GROUND TO	GANG CONDENSER SETTING	ADJUST	ADJUST FOR
455 KC	Control Grid 1st 6BA6 Pin No. 1	.1 mf	Chassis Base	Rotor Fully Open	2nd I.F. Pri. (1) and Sec. (2)	Maximum Output
455 KC	Control Grid 6BE6 Pin No. 7 1st Det.	.1 mf	Chassis Base	Rotor Fully Open	1st I.F. Pri. (3) and Sec. (4)	Maximum Output
455 KC	Control Grid 6BE6 Pin No. 7	.1 mf	Chassis Base	Rotor Fully Open	2nd I-F Pri. (1) and Sec. (2)	Maximum Output
1620 KC	Control Grid 6BE6 Pin No. 7	.1 mf	Chassis Base	Rotor Fully Open	Oscillator C-41	Maximum Output
1400 KC	External Antenna Clip	50 mmf	Chassis Base	Turn Rotor to Max. Output. Set Pointer to 1400 KC See Note A	Antenna C-2	Maximum Output

NOTE A—If the pointer is not at 1400 KC on the dial, reset pointer to the 1400 KC mark on the dial scale.

©John F. Rider

Compliments of www.nucow.com

MODEL D2027A

FM STAGES

The following is required for aligning:

An accurately calibrated signal generator providing unmodulated signals at the test frequencies listed below.

Non-metallic screwdriver.

Dummy Antennas and I-F Loading Resistor—2500 mmf, 300 ohms

Zero center scale DC vacuum tube voltmeter having a range of approximately 3 volts.
(If a zero center scale meter is not available, a standard scale vacuum tube voltmeter may be used by reversing the meter connections for negative readings).
Allow chassis and signal generator to "Heat Up" for several minutes.

SIGNAL GENERATOR	FREQUENCY SETTING	CONNECT GENERATOR OUTPUT TO	THROUGH DUMMY ANTENNA	BAND SWITCH SETTING	GANG CONDENSER SETTING	ADJUST	ADJUST FOR
Discriminator	10.7 MC	6BA6 2nd I-F Pin 1 and Chassis	2500 mmf	FM	Rotor Fully Open	Disc. Pri. (5) Note A	Maximum Deflection
	10.7 MC	6BA6 2nd I-F Pin 1 and Chassis	2500 mmf	FM	Rotor Fully Open	Disc. Sec. (6) Note B	
I-F	10.7 MC Note C	6BA6 1st I-F Pin 1 and Chassis	2500 mmf	FM	Rotor Fully Open	2nd I-F Pri. (7) Sec. (8) Note D	Maximum Deflection
Discriminator	10.7 MC	6BA6 1st I-F Pin 1 and Chassis	2500 mmf	FM	Rotor Fully Open	Disc. Pri. (5) Note D	Maximum Deflection
I-F	10.7 MC	Junction C-32A & B (Dual 100 mmf cond.) And chassis	2500 mmf	FM	Rotor Fully Open	1st I-F Pri. (9) & Sec. (10) 2nd I-F Pri. (7) & Sec. (8) Disc. Pri. (5) In Order Shown Note D	Maximum Deflection
	10.7 MC	Same as above	2500 mmf	FM	Rotor Fully Open	Disc. Sec. (6) Note B	Maximum Deflection
RECHECK I-F ADJUSTMENTS IN ORDER GIVEN							
Oscillator	108.5	Disconnect hank antenna and connect generator to dipole terminals with resistor in series.	300 ohms	FM	Rotor Fully Open	Osc. C-25	Maximum Deflection
Antenna	104.5	Same as above	300 ohms	FM	Tune rotor for max. AVC voltage	Ant. C-39	Maximum Deflection
RECHECK ANTENNA & OSC. ADJUSTMENTS IN ORDER GIVEN							

FM ALIGNMENT NOTES

NOTE A—The zero center scale DC vacuum tube voltmeter is to be connected between chassis ground and the AVC line. A signal of .1 volt must be fed into the receiver for this adjustment.
Note output voltage on the zero center DC vacuum tube voltmeter

NOTE B—Disconnect zero center DC vacuum tube voltmeter from AVC and connect it at the audio takeoff point at the 27 K ohm resistor (R-10) and its junction with the terminal strip. Adjust for zero voltage indication.

NOTE C—AM I-F coils must be aligned before attempting to align the FM I-F coils.

NOTE D—Connect zero center DC vacuum tube voltmeter as in Note A. Adjust input to give same output on the zero center DC vacuum tube voltmeter as in Note A.

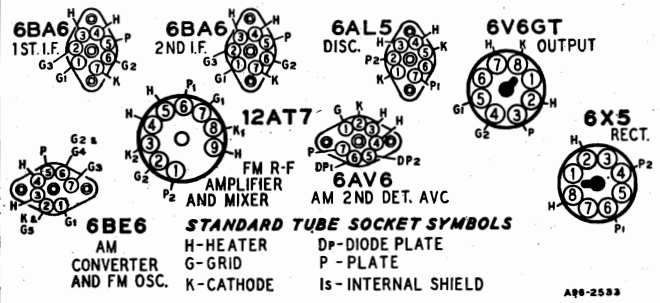

TUBE SOCKET VOLTAGES

Socket voltages are shown on the schematic diagram at the tube socket terminals. All voltages are between the socket terminal and chassis ground. Plate, screen and cathode voltages were taken with a 1000 ohm-per-volt meter with a 300 volt scale used for plate and screen voltages. Audio grid voltages were read with a vacuum tube volt-meter. Conditions of measurement are:

Line voltage .....117 Volts AC
Signal Input .....None
A Variation of ±10% is usually permissible.

©John F. Rider

Compliments of www.nucow.com

MODEL D2027A

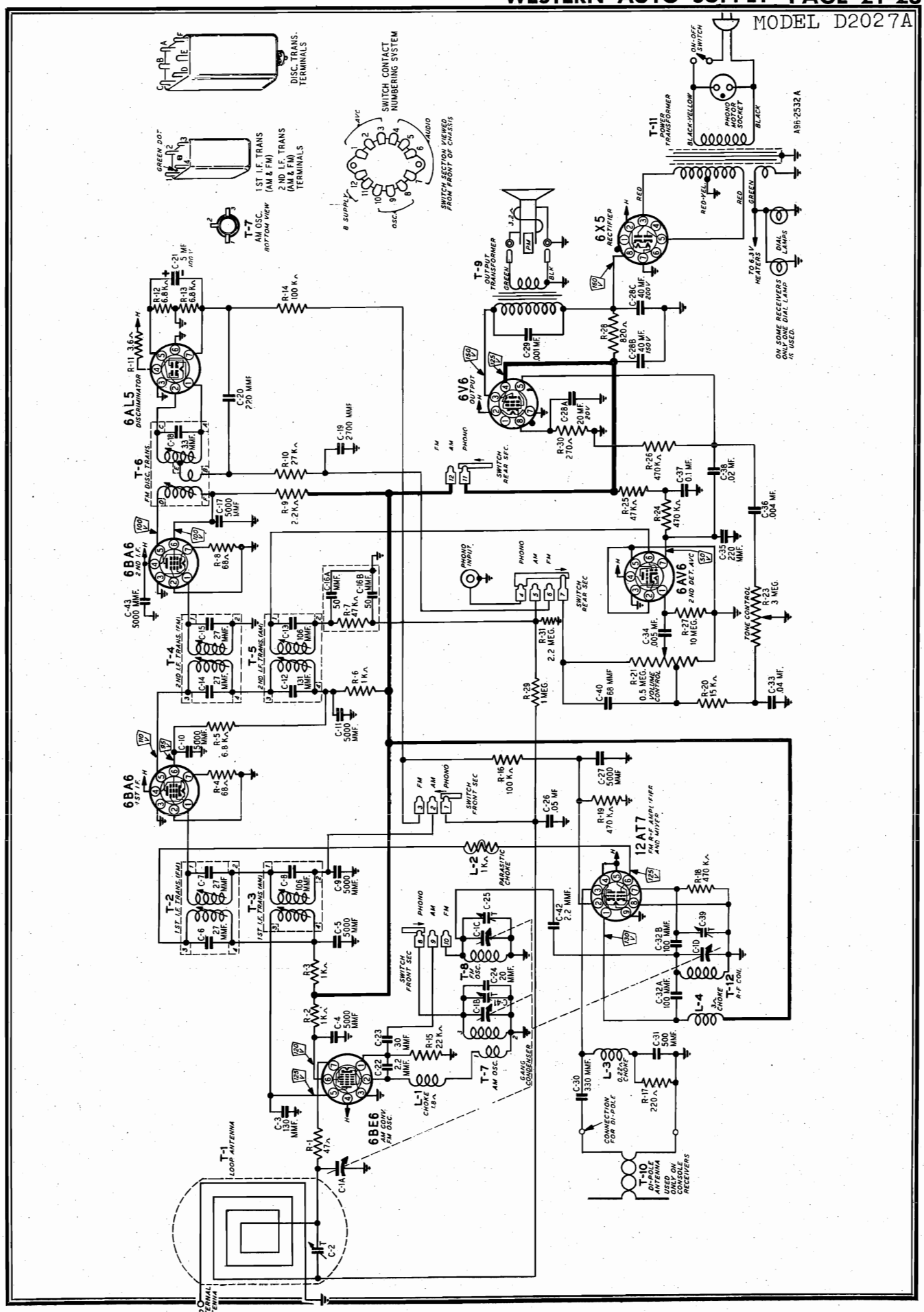

©John F. Rider

Compliments of www.nucow.com

MODEL D2027A

REPLACEMENT PARTS LIST

NOTICE: There is a model number label on the chassis. This label identifies the radio as to chassis, dial and issue letter. When ordering parts or writing, give ALL information on this label.

MISCELLANEOUS

12A494	5¼" P.M. Speaker
4X1055	Escutcheon
10A734	Knob
13X546	Line Cord & Plug Assembly
2A393	Band Change Switch
3A303	Molded Octal Tube Socket
3A305	Phono Socket
3A426	Tube Socket (Miniature)
3A443	Tube Socket (6BE6)
14X466	Speaker Baffle
14X467	Grille Cloth
20X1551	Stud (Mtg. Speaker to Baffle)
3A304	Phono Motor Socket
3A427	Tube Socket (12AT7)
	Mahogany Cabinet No. 906

CAPACITORS

C-1	14A211	Gang Condenser Assembly		
C-2	17A256	2-24 mmf		Trimmer
C-3	47X559	130 mmf		Ceramic
C-4, C-5, C-9, C-10, C-11, C-17, C-27, C-43	47X507	5000 mmf		Ceramic
C-6, C-7	Part of T-2 (1st I-F Trans. FM)			
C-8	Part of T-3 (1st I-F Trans. AM)			
C-12, C-13	Part of T-5 (2nd I-F Trans. AM)			
C-14, C-15	Part of T-4 (2nd I-F Trans. FM)			
C-16A, C-16B	47X112	50-50 mmf		Dual Mica
C-18	Part of T-6 (Discriminator Trans.)			
C-19	47X492	2700 mmf		Molded Mica
C-20, C-35	47X468	220 mmf		Ceramic
C-21	45X361	5 mf	100 V	Dry Electrolytic
C-22, C-42	47X557	2.2 mmf		Ceramic
C-23	47X558	30 mmf		Ceramic
C-24	47X516	20 mmf		Ceramic
C-25	17A255	1-8 mmf		Trimmer
C-26	B66503	.05 mf	200 V	Tubular
C-28A	45X360	20 mf	20 V	Dry Electrolytic
C-28B		40 mf	150 V	
C-28C		40 mf	200 V	
C-29	H66102	.001 mf	800 V	Tubular
C-30	47X470	330 mmf		Molded Mica
C-31	47X508	500 mmf		Ceramic
C-32A, C-32B	76X4	100 mmf		Dual Ceramic
C-33	B66403	.04 mf	200 V	Tubular
C-34	D66502	.005 mf	400 V	Tubular
C-36	B66402	.004 mf	200 V	Tubular
C-37	D66104	.1 mf	400 V	Tubular
C-38	D66203	.02 mf	400 V	Tubular
C-39, C-41	Part of C-1 (Gang Condenser)			
C-40	47X471	68 mmf		Ceramic

RESISTORS

		Ohms	Watts	
R-1	B85470	47	0.5	Carbon
R-2, R-3, R-6	B85102	1000	0.5	Carbon
R-4, R-8	B84680	68	0.5	Carbon
R-5, R-12, R-13	B84682	6800	0.5	Carbon
R-7, R-25	B85473	47 K	0.5	Carbon
R-9	B85222	2200	0.5	Carbon
R-10	B85273	27 K	0.5	Carbon
R-11	43X233	3.6	0.5	Wirewound
R-14, R-16	B85104	100 K	0.5	Carbon
R-15	B85223	22 K	0.5	Carbon
R-17	B84221	220	0.5	Carbon
R-18, R-19, R-24, R-26	B85474	470 K	0.5	Carbon
R-20	B85153	15 K	0.5	Carbon
R-21	36X372	.5 meg.		Volume Control
R-23	40X285	3 meg.		Tone Control
R-27	B85106	10 meg.	0.5	Carbon
R-28	D84821	820	2.0	Carbon
R-29	B85105	1 meg.	0.5	Carbon
R-30	B84271	270	0.5	Carbon
R-31	B85225	2.2 meg.	0.5	Carbon

TRANSFORMERS AND COILS

L-1	35A5	Insulated Choke
L-2	9A2068	Parasitic Choke
L-3	35A9	Insulated Choke
L-4	35A8	Insulated Choke
T-1	9A2097	"B" Range Loop Antenna
T-2	9A2060	1st I-F Trans. (FM)
T-3	9A2062	1st I-F Trans. (AM)
T-4	9A2061	2nd I-F Trans. (FM)
T-5	9A2063	2nd I-F Trans. (AM)
T-6	9A2064	Discriminator Transformer
T-7	9A2065	Oscillator Coil (AM)
T-8	9A2067	Oscillator Coil (FM)
T-9	51X144	Output Transformer
T-11	53X291	Power Transformer
T-12	9A2066	Antenna Coil (FM)

DIAL AND DRIVE ASSEMBLY

58X731	Dial Glass
15X256	Pointer
19X192	"C" Washer (Mtg. Drive Shaft)
6X66	Rubber Grommet
25X1679	Dial Bracket
28X113	Drive Cord Tension Spring
7A103	No. 47 Pilot Light
7A225	Pilot Light Socket Assembly
10X60	Drive Cord Assembly
26X486	Drive Shaft

©John F. Rider

Compliments of www.nucow.com

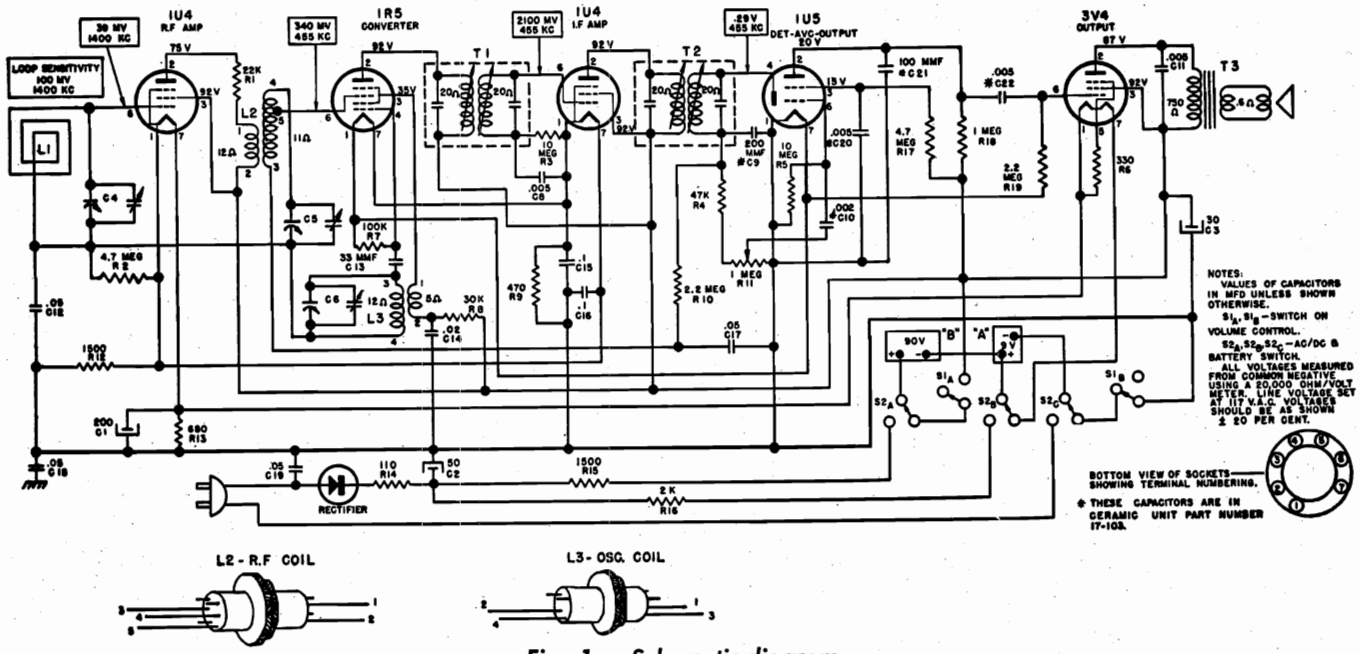

Fig. 1. Schematic diagram.

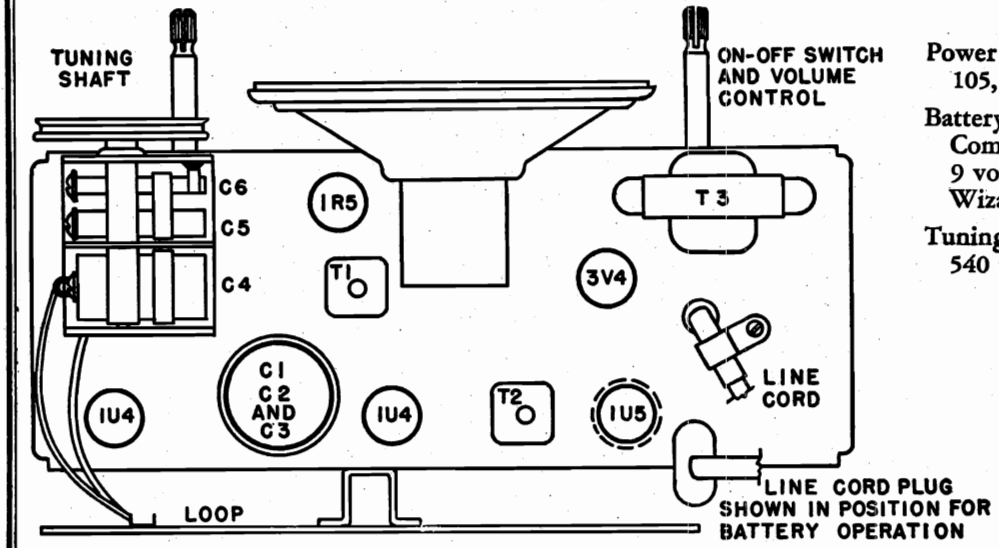

Fig. 2. Chassis—top view

SPECIFICATIONS

Power Supply
105, 125 volt AC-DC Battery

Battery
Combination AB pack
9 volt "A", 90 volt "B"
Wizard B6460

Tuning Range
540 to 1610 KC

I.F. Frequency
455 KC

Loud Speaker
5 inch P.M.

Voice Coil Impedence
3.2 ohms at 400 cycles

Power Output
Maximum 300 milliwatts

Tube Complement
1U4—R.F. Amplifier
1R5—Oscillator Conv.
1U4—I.F. Amplifier
1U5—AVC, Detector, 1st Audio
3V4—Power Output

©John F. Rider
Compliments of www.nucow.com

ALIGNMENT PROCEDURE

ALIGNING INSTRUCTIONS

Never attempt any adjustments on this receiver unless it becomes necessary to replace a coil or transformer, or the adjustments have been tampered with in the field. Always make certain that other circuit components, such as tubes, condensers, resistors, etc., are normal before proceeding with realignment.

If realignment is necessary follow the instructions given below in the order listed. After realignment has been completed repeat the procedure as a final check. For alignment points refer to Figure No. 2.

Volume control—Maximum: all adjustments.
Connect ground lead of signal generator to common "B." negative.
Connect dummy antenna in series with output lead of signal generator.
Connect output meter across voice coil of speaker.

The following equipment is necessary for proper alignment:
Signal generator that will provide the test frequencies as listed, 30% modulated, 400 c.p.s.
Output meter.
Non-metallic screwdriver.
Dummy antenna—.1 mfd.

CAUTION: This is an AC-DC receiver and if alignment is made with the receiver connected to 117 volts AC or DC, it is necessary to isolate the signal generator or the receiver from the line by use of a transformer, or place a .2 M.F.D. condenser in both test leads of the Signal Generator.

Position of Tuner	Generator Freq.	Dummy Antenna	Generator Connection	Adjustments (in order shown)	Function
Min. Cap.	455 kc	0.1 mfd.	Pin #6 of 1U4 I-F Amp.	T2 (top and bottom)	I.F.
Min. Cap.	455 kc	0.1 mfd.	Pin #6 of 1R5 Conv.	T1 (top and bottom)	I.F.
Min. Cap.	1610 kc	0.1 mfd.	Stator ant. tuner	C6	Osc.
1400 kc	1400 kc	0.1 mfd.	Stator ant. tuner	C5	R.F.
1400 kc	1400 kc		Loosely coupled to loop	C4	Loop

*Connect ground lead of signal generator to common "B" negative.

©John F. Rider
Compliments of www.nucow.com

Circuit Diagram Reference	Part Number	Description
		CONDENSERS
C1, C2, C3	18-296	Capacitor, electrolytic
C4, C5, C6	19-208	Capacitor, variable (3 gang)
C8, C11	16-153	Capacitor, .005 mfd. 600 volt
C9, C10, C20, C21, C22	17-103	Capacitor, ceramic unit
C12, C17	16-152	Capacitor, .05 mfd. 200 volt
C13	15-186	Capacitor, 10 mmfd. mica
C14	16-150	Capacitor, .02 mfd. 400 volt
C15, C16	16-157	Capacitor, .1 mfd. 200 volt
C18, C19	16-179	Capacitor, .05 mfd. 400 volt
		RESISTORS
R1	60-744	Resistor, 22,000 ohm, ½ watt, 10%
R2, R17	60-669	Resistor, 4.7 megohm, ½ watt
R3, R5	60-728	Resistor, 10 megohm, ½ watt
R4	60-730	Resistor, 47,000 ohm, ½ watt
R6	60-704	Resistor, 330 ohm, ½ watt, 10%
R7	60-727	Resistor, 100,000 ohm, ½ watt
R8	60-676	Resistor, 30,000 ohm, ½ watt
R9	60-770	Resistor, 470 ohm, ½ watt, 10%
R10, R19	60-726	Resistor, 2.2 megohm, ½ watt
R12, R15	60-729	Resistor, 1500 ohm, ½ watt, 10%
R13	60-708	Resistor, 680 ohm, ½ watt, 10%
R14	60-796	Resistor, 110 ohm, 3 watt, 10%
R16	60-757	Resistor, 2000 ohm, 10 watt, 5%
R18	60-668	Resistor, 1 megohm, ½ watt
		COILS AND TRANSFORMERS
L1	82-66	Loop, antenna
L2	10-535	R.F. coil
L3	10-553	Oscillator coil
T1, T2	10-508	Transformer, 1st and 2nd I.F.
T3	80-228	Transformer, output
		MISCELLANEOUS
	84-391	Cable, assembly, battery
	83-421	Clip, I.F. transformer mounting
R11, S1	24-186	Control, volume with switch
	23-151	Cord, power, AC/DC
	51-105	Cord, pointer travel, 29"
	47-108	Grommet, variable condenser
	76-13	Insulator, electrolytic
	84-435	Pointer rail assembly
	58-81	Pointer
	83-642	Rectifier, selenium
	75-69	Shaft, tuning
	68-39	Socket, miniature, wafer
	79-383	Speaker, 5" P.M.
	70-122	Spring, dial cord
	69-186	Switch, AC/DC/Battery
	86-51	Washer, "C", tuning shaft
	86-80	Washer, compression, tuning shaft
		CABINET
	44-13	Baffle
	42-470	Cabinet
	31-161	Dial plate
	67-556	Dial scale
	40-161	Escutcheon
	98-15	Grille cloth
	52-309	Knob

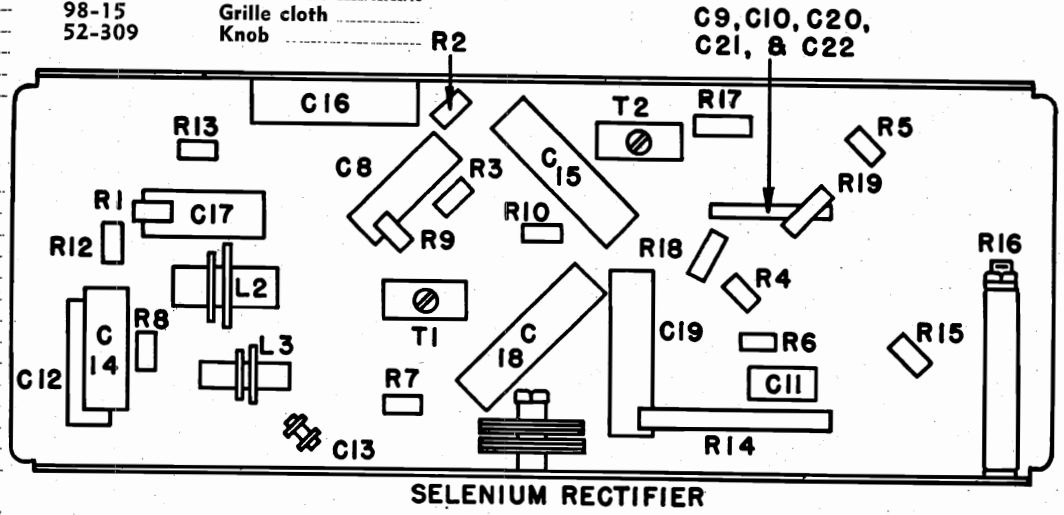

Fig. 3. Chassis—bottom view

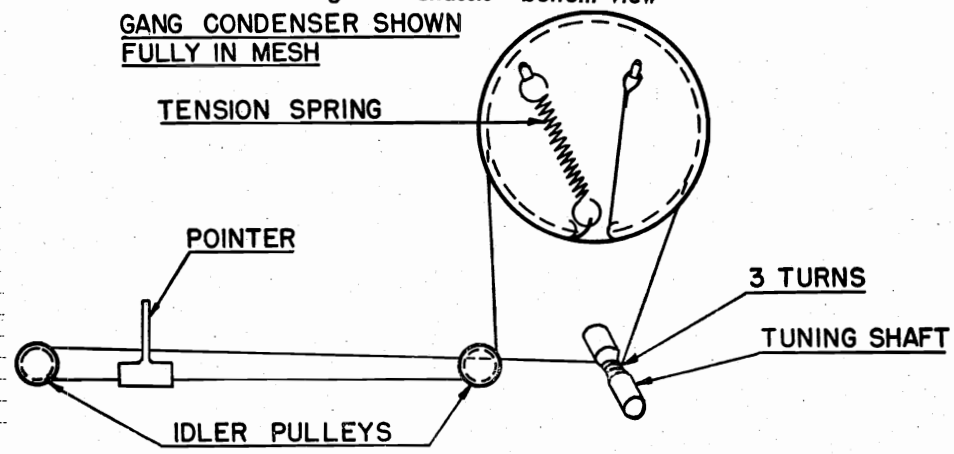

Fig. 4. Stringing diagram

©John F. Rider
Compliments of www.nucow.com

MODEL D3912

SPECIFICATIONS

Power Supply
105, 125 volt AC-DC or Batteries

Batteries
Five 1½ volt "A" Wizard B6722, B6732, B6740 or B6745
One 67½ volt "B" Wizard B6258

Tuning Range
545 to 1610 KC

I.F. Frequency
455 KC

Loud Speaker
4 inch P.M.

Voice Coil Impedence
3.2 ohms at 400 cycles

Power Output
Maximum 100 milliwatts

Tube Complement
1R5—Oscillator Conv.
1U4—I.F. Amplifier
1U5—AVC, Detector, 1st Audio
3V4—Power Output

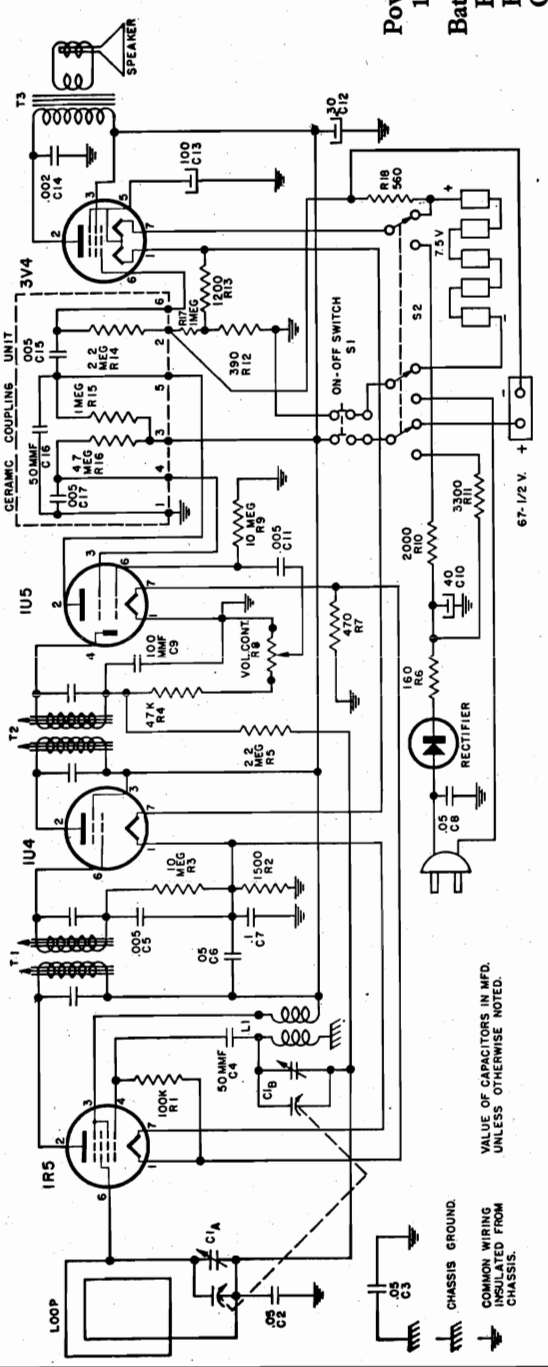

Fig. 1 Schematic Diagram

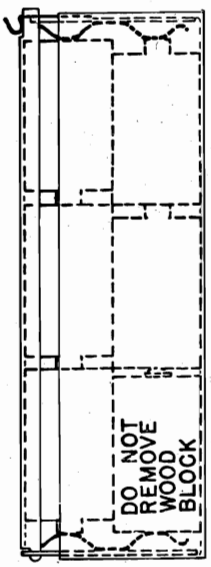

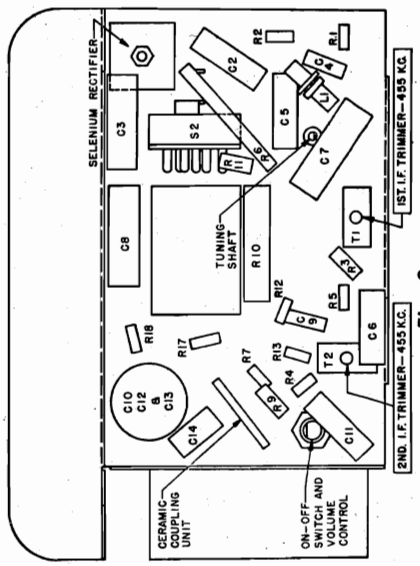

Fig 3

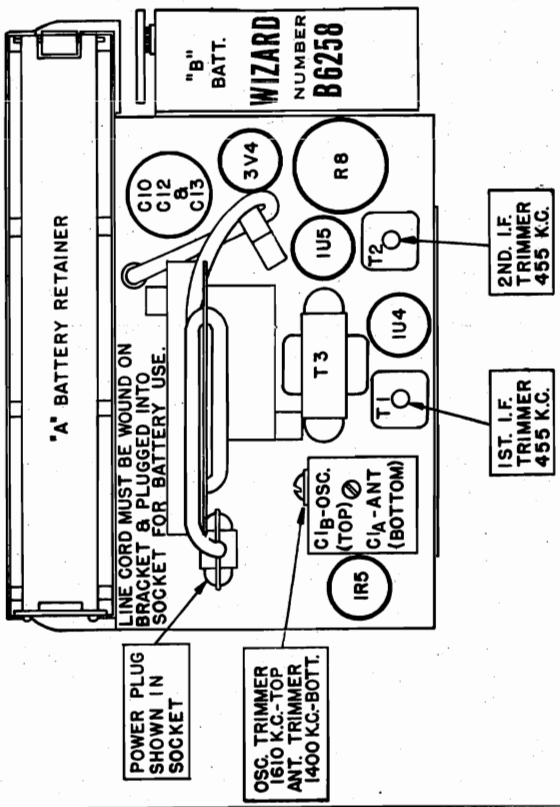

Fig. 2. Tube, Trimmer and Battery Locations

©John F. Rider

Compliments of www.nucow.com

All voltages are measured from tube pin to common "B" negative with a 20,000 ohm per volt voltmeter.

Voltages shown in circles are obtained when set is operated on 117 volt current.

Voltages shown outside the circles are obtained when the set is operated on batteries. New batteries in good condition should be used for these measurements.

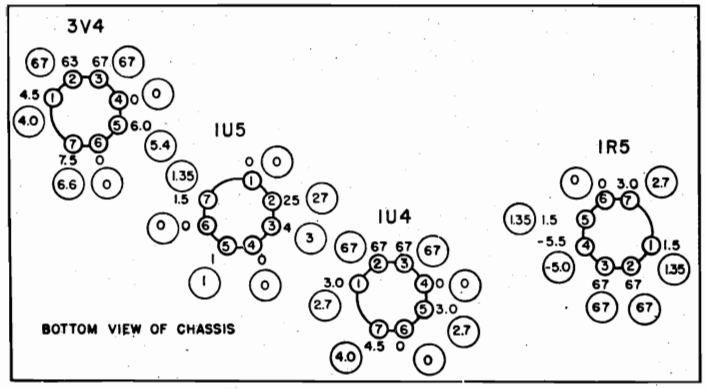

Fig 4 Voltage Chart

CONDENSERS

Circuit Diagram Reference	Part No.	Description
C1A, C1B	B19-206	Variable condenser
C2, C6	A16-204	.05 MFD 200 volt condenser
C3	A16-172	.05 MFD 400 volt condenser
C4	A15-175	50 MMF mica condenser
C5	A16-205	.005 MFD 600 volt condenser
C7	A16-203	.1 MFD 200 volt condenser
C8	A16-189	.05 MFD 400 volt condenser
C9	A15-188	100 MMF mica condenser
C10	A18-290	40 MFD 150 volt electrolytic condenser
C12		30 MFD 150 volt electrolytic condenser
C13		100 MFD 10 volt electrolytic condenser
C11	A16-153	.005 MFD 600 volt condenser
C14	A16-182	.002 MFD 200 volt condenser
C15, C17	A17-100	.005 MFD (See note below.)
C16		50 MMF

RESISTORS

R1	A60-727	100K ohm ½ watt 20% resistor
R2	A60-729	1500K ohm ½ watt 10% resistor
R3, R9	A60-728	10 megohm ½ watt 20% resistor
R4	A60-730	47K ohm ½ watt 20% resistor
R5	A60-726	2.2 megohm ½ watt 20% resistor
R6	A60-725	160 ohm 5 watt 10% resistor
R7	A60-722	470 ohm ½ watt 10% resistor
R8, S1	A24-178	Volume control, with switch
R10	A60-757	2000 ohm 10 watt 10% resistor
R11	A60-724	3300 ohm 1 watt 10% resistor
R12	A60-665	390 ohm ½ watt 10% resistor
R13	A60-756	1200 ohm ½ watt 10% resistor
R14	A17-100	2.2 megohm (See note below.)
R15		1 megohm
R16		4.7 megohm
R17	A60-668	1 megohm ½ watt 20% resistor
R18	A60-758	560 ohm ½ watt 10% resistor

COILS

L1	A10-514	Oscillator coil
T1, T2	A10-475	1st and 2nd I.F. transformer
T3	B80-245	Output transformer

MISCELLANEOUS

S2	A69-182	Switch, AC-DC-BATTERY
	S84-333	Cabinet assembly
	S84-334	Cover, cabinet back
	B21-144	Cap for handle
	A83-421	Clip, I.F. transformer mounting
	B71-40	Cover, "A" battery retainer
	A53-1	Handle
	S84-243	Hub and pointer assembly
	C52-268	Knob, tuning
	C52-269	Knob, volume
	S84-338	Loop antenna
	A83-642	Rectifier, Selenium
	A68-39	Socket, tube
	B79-364	Speaker, 4" P.M.
	A76-49	Terminal, for "B" battery

NOTE: C15, C16, C17, R14, R15 and R16 are contained in the Ceramic Coupling Unit, Part No. A17-100.

©John F. Rider
Compliments of www.nucow.com

ALIGNMENT PROCEDURE

ALIGNING INSTRUCTIONS

Never attempt any adjustments on this receiver unless it becomes necessary to replace a coil or transformer, or the adjustments have been tampered with in the field. Always make certain that other circuit components, such as tubes, condensers, resistors, etc., are normal before proceeding with realignment.

If realignment is necessary follow the instructions given below in the order listed. After realignment has been completed repeat the procedure as a final check. For alignment points refer to Figure No. 2.

Volume control—Maximum: all adjustments.
Connect ground lead of signal generator to common "B." negative.
Connect dummy antenna in series with output lead of signal generator.
Connect output meter across voice coil of speaker.

The following equipment is necessary for proper alignment:
Signal generator that will provide the test frequencies as listed, 30% modulated, 400 c.p.s.
Output meter.
Non-metallic screwdriver.
Dummy antennas— .1 mfd., .00025 mfd.

CAUTION: This is an AC-DC receiver and if alignment is made with the receiver connected to 117 volts AC or DC, it is necessary to isolate the signal generator or the receiver from the line by use of a transformer, or place a .2 M.F.D. condenser in both test leads of the Signal Generator.

Position of Variable	*Generator Frequency*	*Dummy Ant. Mfd.*	*Generator Connections*	*Trimmer Adjustment*	*Trimmer Function*
Fully open	455 KC	.1	*1R5 Grid (Stator of C1A)	T2	Output I.F.
Fully open	455 KC	.1	*1R5 Grid (Stator of C1A)	T1	Input I.F.
Fully open	1610 KC	.00025	*1R5 Grid (Stator of C1A)	C1B	Oscillator
Tune in signal from generator	1400 KC	—	Loosely coupled to loop	C1A	Antenna

*Connect ground lead of signal generator to common "B" negative.

©John F. Rider

Compliments of www.nucow.com

INSTALLATION

This radio comes to you complete with all hardware necessary for mounting, and also with a distributor suppressor, ammeter condenser and generator condenser. By referring to Figures 1 and 2, and following the instructions outlined below, you will find that it is very simple to install.

First determine where the receiver is to be mounted by holding it with the hands in the approximate location in the car. Using the front mounting bracket as a template, mark and drill two 5/8" holes in the instrument panel flange. Now secure the mounting bracket to the radio receiver with the screws provided, and then mount the front of the radio to the instrument panel, using the bolts, lock washers and nuts provided for this purpose. The back of the radio is supported by means of the rear mounting strap. The mounting strap should be formed to the correct angles, as illustrated in Figure 2, so that it can then be fastened to the fire wall. After marking and center-punching the fire wall at the correct location, drill with a 3/8" drill. The mounting strap is then secured to the radio and fastened to the fire wall of the car with the 1/4" bolt, lock washer and nut furnished with the receiver.

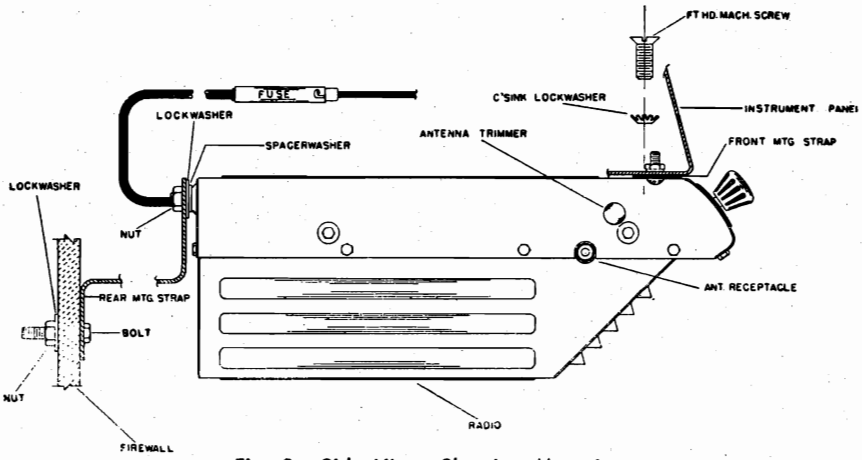

Fig. 2 Side View, Showing Mounting

CONNECTING THE RADIO

The antenna cable should be connected to the radio by inserting the jack into the socket provided on the side of the radio. Connect the battery cable to the hot side of the ammeter behind the instrument panel. The fuse should then be inserted into the cable receptor.

FINAL ADJUSTMENTS

The input circuit has been especially designed to be used with a low capacity antenna, of the fish pole or whip type.

Truetone Antennas are especially recommended for use with this radio.

To adjust the antenna trimmer condenser, carefully tune the receiver to a weak station at approximately 600 kilocycles (K.C.). Remove the snap button covering the antenna trimmer (See Figure 2) and adjust the trimmer for maximum volume. A small screw driver will be needed for this purpose.

DIAL POINTER ADJUSTMENT

If it should become necessary to readjust the dial pointer for correct calibration, this may be easily done without removing the radio from the car by proceeding as follows:

A. Turn tuning knob to the right (clockwise) as far as it will go.
B. Remove snap button located on the right side of the case (viewed from the front), in the extreme upper front corner.
C. Insert screwdriver through hole in case and move dial pointer directly over white dot at high end of dial (1600KC).
D. Tune receiver to station of known frequency in the center of the dial and readjust pointer for more accurate indication, if necessary.
E. Replace snap button into hole in case.

CAUTION: Be careful not to scratch or damage dial scale or dial pointer when making this adjustment.

ACCESSORIES FURNISHED FOR INSTALLATION

All of the necessary parts that are needed for installing this receiver are furnished in the Mounting Parts Kit No. S84-192 and the Suppression Kit Assembly Part No. S84-230, as listed below. Also supplied are the rear mounting strap, Part No. B31-134, and the front mounting plate, Part No. B31-133.

S84-192 MOUNTING PARTS KIT

1 1/4" Bolt
2 1/4" Lock Washers
2 1/4" Hexagon Nuts
2 10-32 x 5/8" Screws
2 10-32 x 3/8" Screws
2 External Tooth Lock Washers
2 Internal Tooth Lock Washers
2 10-32 Hexagon Nuts
1 Washer-Spacer

S84-230 SUPPRESSION KIT & MISC. PARTS

1 S84-233 "A" lead assem.
1 A43-10 Fuse
2 A52-256 Control knobs
1 A81-13 Sleeve (for fuse)
1 S84-193 Suppression Kit consisting of:
2 .5 MFD Condensers
1 Distributor Suppressor
20" Wire Braid

©John F. Rider

Compliments of www.nucow.com

ELIMINATING MOTOR NOISE

IMPORTANT: Special care should be taken when mounting the radio to make sure all paint, grease, rust, etc., is removed from all three mounting points. A good electrical contact at these points will aid materially in eliminating motor noise.

GENERATOR CONDENSER

The generator condenser must be connected to the battery terminal of the generator in all cases. If your car is equipped with a generator using an automatic regulator, make sure the condenser IS NOT fastened to the field winding terminal. If in doubt, your local car dealer can advise you as to where the car manufacturer recommends connecting it.

DISTRIBUTOR SUPPRESSOR

Remove the coil to distributor high tension lead from the distributor. Cut the lead two inches from the end, and screw the distributor resistor on to the coil lead, then screw the short length into the resistor and plug the cable into the distributor cap.

AMMETER CONDENSER

A .5 MFD bypass condenser is furnished for attaching to the ammeter. This should be connected to either side of the ammeter with the ground lug fastened to a good ground nearby. In most cases the use of this condenser, the distributor suppressor, and the generator condenser, will eliminate all objectionable ignition interference.

ELECTRICAL ACCESSORIES

In some cases, it may be found that car accessories such as electric heaters, lighters, automatic relays, or gauges, may cause interference while in operation. Proper procedure in such cases is to try another by-pass condenser from ground to the suspected accessory until the source of the interference is found. The condenser then should be permanently mounted in this location.

HIGH AND LOW TENSION LEADS

In many cases the low tension battery leads, etc., are grouped together with the high tension wires. These leads will very often pick up motor noise and feed it into the receiver through the battery circuit. In cases such as these it will be necessary to separate the low tension from the high tension wires and run them through another hole if they run from the engine compartment up to the instrument panel. This condition is particularly true on the V-8 Ford, as the battery and primary leads run through a special tube which also houses the high tension leads. Shield and ground these leads.

IGNITION COILS

In cars where the ignition coil is located on the back side of the instrument panel it is often necessary to use an additional condenser. It must be installed from the battery side of the ignition coil to the closest ground on the instrument panel.

Short leads are very important. Where coils are mounted either on the instrument panel or in the driver's compartment, it may be necessary to shield the high tension lead from the coil to the distributor.

WHEEL STATIC

Wheel Static is a form of interference caused by the rotation of the front wheels of the car, and it is, of course, only noticed when the car is in motion. If this form of interference is present it can be eliminated by installing wheel static collector springs between the inner hub cap and the spindle shaft.

BONDING OF FIRE WALL TUBES

Bonding the steering column to the fire wall with a short braid may also be effective. Clean the paint from the steering column at the fire wall where the column enters the motor compartment, and solder on a short piece of braid. Ground the end of the braid to the fire wall.

In some cases it may be necessary to ground the tubes and rods coming through the fire wall in order to reduce the interference. Clean them with emery cloth and spot-solder the braid, fastening the end under a convenient screw. A 1/4" piece of wire braid 20 inches long is furnished in the suppression kit assembly for this purpose.

©John F. Rider

Compliments of www.nucow.com

MODEL D4818A

ELECTRICAL SPECIFICATIONS

Power Supply.....6.3 volts DC
Current .....4.8 amp. average
Frequency Range.....540 to 1600 KC
I. F. Frequency.....455 KC
Speaker.....4" P. M.
Power Output.....1.2 watts, undistorted
2.5 watts, maximum
Sensitivity.....10 microvolts average for 1 watt output
Selectivity...20 KC broad at 1000 times signal, at 1000 KC

The tube compliment of this receiver is as follows:

1—6SK7GT—R. F. Amplifier.

1—6SA7GT—Converter.

1—6SK7GT—I.F. Amplifier.

1—6SQ7—Detector—AVC—1st audio.

1—6V6GT—Power output.

1—6X5GT—Rectifier.

SERVICE NOTES

Voltages taken from the different points of the circuit to the chassis are measured with volume control in maximum position, all tubes in their sockets, no signal applied, and with a volt meter having a resistance of 20,000 ohms per volt. These voltages are clearly shown on the voltage chart, (Fig. 4).

All voltages should be measured with an input voltage of 6.3 volts DC.

To check for open by-pass condensers, shunt each condenser with another one having the same capacity and voltage rating which is known to be good until the defective unit is located.

ALIGNING INSTRUCTION

Never attempt any adjustments on this receiver unless it becomes necessary to replace a coil or transformer, or the adjustments have been tampered with in the field. Always make certain that other circuit components, such as tubes, condensers, resistors, etc., are normal before proceeding with realignment.

If realignment is necessary follow the instructions given under the heading "ALIGNMENT PROCEDURE". After realignment has been completed repeat the procedure as a final check.

INSTRUCTIONS FOR REMOVING CHASSIS FROM THE CASE

The bottom cover (the one with the speaker louvers) can be removed to permit servicing of major components, such as tubes and vibrator, by removing the eight (8) screws holding it to the top cover. There are three (3) screws on each side, one (1) in the rear, and one (1) in the front.

CAUTION: Before attempting to remove the top cover, to service condensers, resistors, etc., the screw connecting the spark plate to the "A" terminal (inside case) must be removed. This is a round head screw, and is located on the rear of the case, close to the mounting stud bolt. It is recessed in a ½ inch hole in the case itself, thereby permitting contact with the spark plate.

After removing the spark plate screw, remove the two knobs by pulling forward and remove the eight (8) screws securing the cover to the chassis. Lift the chassis at the rear, at the same time moving it away from the front of the case so that the volume and tuning shafts will clear the holes in the cover.

NOTE: When reinstalling the chassis into the case, be sure the screw connecting the spark plate to the "A" terminal (inside case) is tightened very securely, otherwise the receiver will not operate properly.

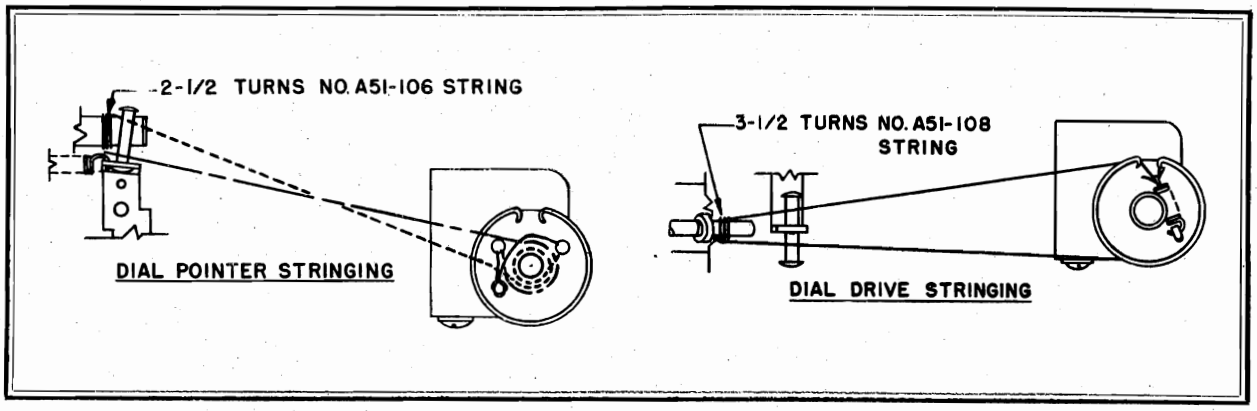

©John F. Rider

Compliments of www.nucow.com

MODEL D4818A

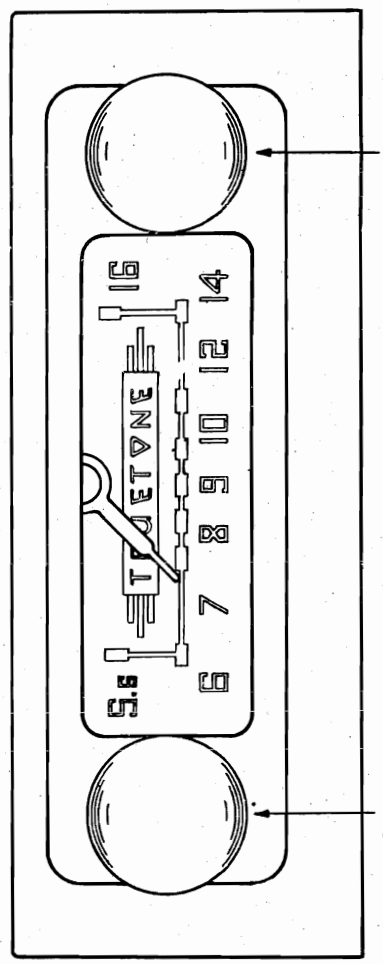

Fig. 1 Front View

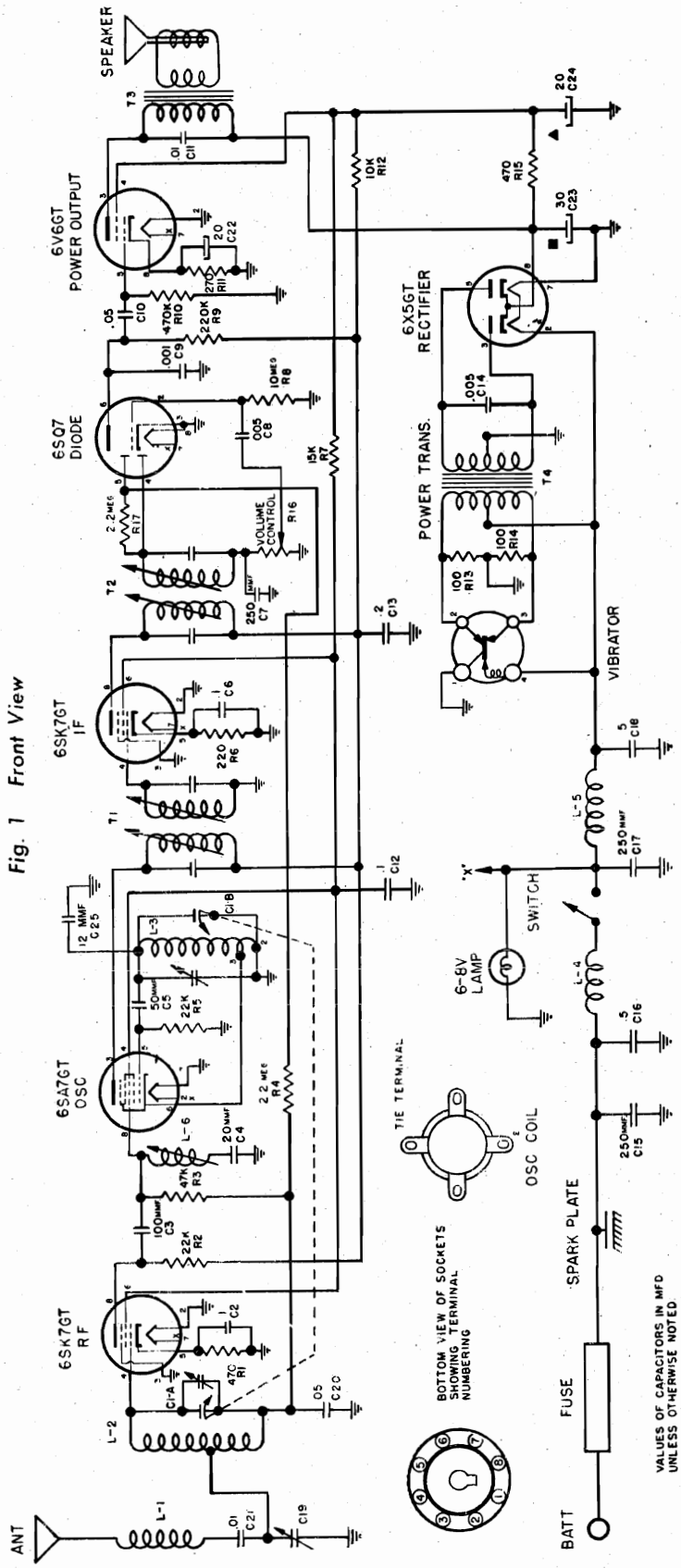

Fig. 3 Schematic Diagram

©John F. Rider

Compliments of www.nucow.com

ALIGNMENT PROCEDURE

Volume control—Maximum, all adjustments.

No signal applied to antenna.

Power input—6.3 volts.

Connect dummy antenna in series with output lead of signal generator.

Connect output meter across voice coil.

Connect ground lead of signal generator to chassis.

Repeat alignment procedure as a final check.

The following equipment is necessary for proper alignment:

Signal generator that will provide the test frequencies as listed.

Non-metallic screwdriver.

Output meter.

Dummy antennas—.1 MFD., .00025 MFD.

For alignment points refer to Figures 4 ad 5.

Dial Setting	Generator Frequency	Dummy Ant.	Generator Connections	Trimmer Reference	Trimmer Adjustment	Trimmer Function
Fully Open	455 KC	.1 MFD.	6SA7 Grid	T2	Maximum	Output I.F.
Fully Open	455 KC	.1 MFD.	6SA7 Grid	T1	Maximum	Input I.F.
Fully Open	455 KC	.00025 MFD.	Ant. lead	L6	Minimum	Wave trap
Fully Open	1600 KC	.00025 MFD.	Ant. lead	C1B	Maximum	Oscillator
Tune in signal from generator	1400 KC	.00025 MFD.	Ant. lead	C1A	Maximum	Antenna

NOTE: The antenna padder condenser, C19, (see Fig. 2) should be adjusted after the radio is installed in the car. Tune the receiver to a weak station at about 600 KC and adjust this trimmer for maximum volume.

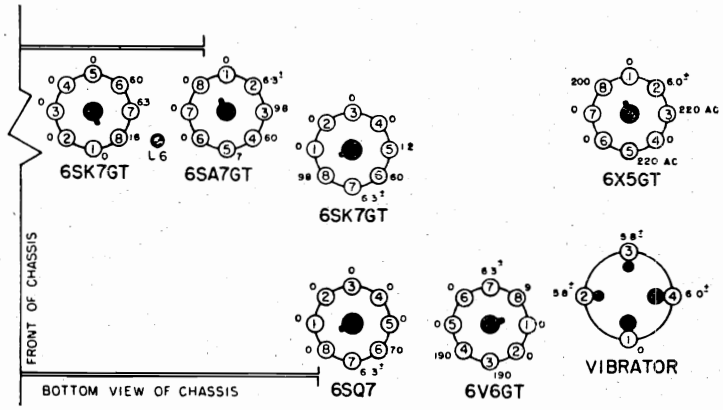

Fig. 4 Socket Voltages

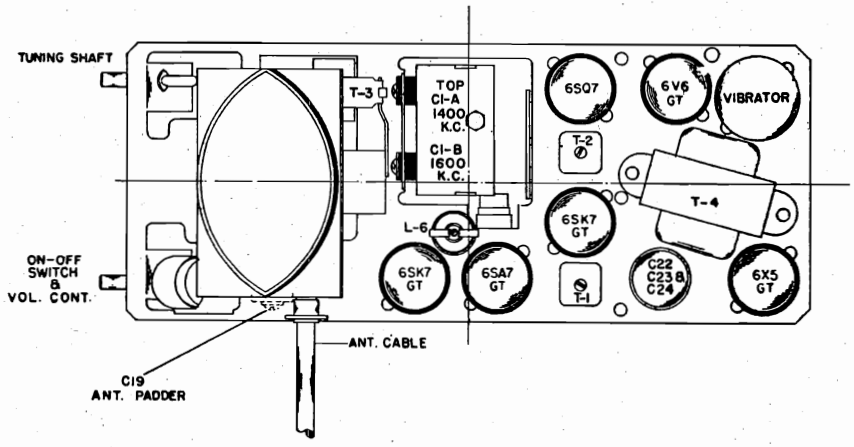

Fig. 5 Tube and Trimmer Locations

©John F. Rider
Compliments of www.nucow.com

MODEL D4818A

C1A, C1B	B19-196	Variable Condenser
C2, C6, C12	A16-187	.1 MFD. 400 Volt Condenser
C3	A15-196	100 MMFD Ceramic Condenser
C4	A15-202	20 MMFD Ceramic Condenser
C5	A15-204	50 MMFD Ceramic Condenser
C7, C15, C17	A15-176	250 MMFD Mica Condenser
C8	A16-190	.005 MFD. 600 Volt Condenser
C9	A16-195	.001 MFD. Ceramic Condenser
C10	A16-193	.05 MFD. 600 Volt Condenser
C11, C21	A16-192	.01 MFD. 400 Volt Condenser
C13	A16-188	.2 MFD. 400 Volt Condenser
C14	A16-185	.005 MFD. 1600 Volt Oil Filled Condenser
C16, C18	A16-184	.5 MFD. 100 Volt Condenser
C19	A20-145	Trimmer Condenser
C20	A16-189	.05 MFD. 400 Volt Condenser
C22	A18-289	20 MFD 25 Volt Electrolytic Condenser
C23		30 MFD 350 Volt Electrolytic Condenser
C24		20 MFD. 350 Volt Electrolytic Condenser
C25	A15-205	12 MMFD ceramic condenser, temp. comp.
		RESISTORS
R1	A60-722	470 Ohm ½ Watt 20% Resistor
R13, R14	A60-752	100 Ohm ½ Watt 10% Resistor
R2, R5	A60-744	22K Ohm ½ Watt 10% Resistor
R3	A60-685	47K Ohm ½ Watt 20% Resistor
R4, R17	A60-726	2.2 Megohm ½ Watt 20% Resistor
R6	A60-753	220 Ohm ½ Watt 10% Resistor
R7	A60-716	15K Ohm 1 Watt 10% Resistor
R8	A60-728	10 Megohm ½ Watt 20% Resistor
R9	A60-667	220K Ohm ½ Watt 20% Resistor
R10	A60-731	470K Ohm ½ Watt 20% Resistor
R11	A60-754	270 Ohm 1 Watt 10% Resistor
R12	A60-698	10K Ohm 1 Watt 10% Resistor
R15	A60-694	470 Ohm 1 Watt 10% Resistor
R16	A24-177	Volume Control, 500,000 Ohms, with Switch
		COILS
L1	A10-513	Antenna Loading Coil
L2	B10-511	Antenna Coil
L3	A10-512	Oscillator Coil
L4	A33-229	Choke, "A" Line
L5	A33-228	Choke, Vibrator Hash
L6	A10-510	I.F. Trap Coil
T1	A10-508	1st I.F. Transformer
T2	A10-509	2nd I.F. Transformer
		TRANSFORMERS
T3	B80-242	Output Transformer (Part of Speaker, not furnished separately)
T4	B80-243	Power Transformer
		DIAL PARTS
	A11-303	Bracket, Dial Scale
	B11-328	Bracket, String Guide
	A72-29	Bushing, Tuning Shaft Bearing
	A70-130	Clip, Spring, for Tuning Shaft
	A48-43	Dial Crystal
	A58-55	Dial Pointer
	B67-516	Dial Scale
	A28-101	Gasket for Speaker
	A52-256	Knob
	A11-329	Link, String Guide
	A89-10	Pilot Light, Type G. E. No. 422
	A65-37	Rivet, Shoulder, for Dial Pointer Stringing
	A65-41	Rivet, Shoulder, for String Guide Brkt. and Link
	A65-12	Rivet, Shoulder, for Dial Drive Stringing
	A75-70	Shaft, Tuning
	A75-67	Shaft, for Dial Pointer
	A70-132	Spring, for Pilot Light Socket
	A70-133	Spring, Dial Drive String Tension
	A70-142	Spring, Pointer Drive String Tension
		MISCELLANEOUS
	S84-233	"A" Lead Assembly
	A83-421	Clip, I.F. Transformer Mounting
	A83-517	Clip, Oscillator Coil Mounting
	A43-10	Fuse, 15 Amp.
	A47-112	Grommet, Rubber (for Mounting Speaker and Variable Condenser)
	B31-134	Mounting Strap, Rear
	B31-133	Mounting Plate, Front
	S84-192	Mounting Parts Kit
	A87-38	Receptacle, Antenna Cable
	B79-362	Speaker, 4" P.M. (includes Output Transformer)
	S84-193	Suppression Kit Assembly
	A34-105	Vibrator
	A83-519	Wiper, Grounding, for Case Covers

©John F. Rider

Compliments of www.nucow.com

INSTALLATION

This radio comes to you complete with all hardware necessary for mounting, and also with a distributor suppressor, ammeter condenser and generator condenser. By referring to Figures 1 and 2, and following the instructions outlined below, you will find that it is very simple to install.

First determine where the receiver is to be mounted by holding it with the hands in the approximate location in the car. Using the front mounting bracket as a template, mark and drill two 5/8" holes in the instrument panel flange. Now secure the mounting bracket to the radio receiver with the screws provided, and then mount the front of the radio to the instrument panel, using the bolts, lock washers and nuts provided for this purpose. The back of the radio is supported by means of the rear mounting strap. The mounting strap should be formed to the correct angles, as illustrated in Figure 2, so that it can then be fastened to the fire wall. After marking and center-punching the fire wall at the correct location, drill with a 3/8" drill. The mounting strap is then secured to the radio and fastened to the fire wall of the car with the 1/4" bolt, lock washer and nut furnished with the receiver.

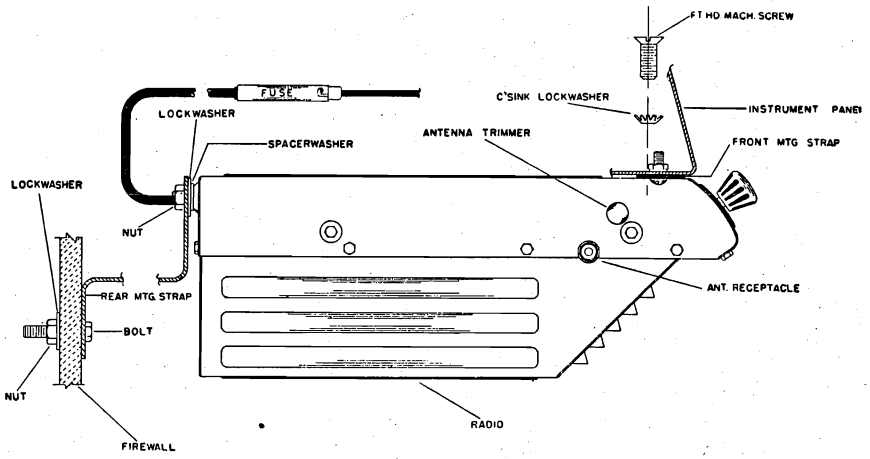

Fig. 2 Side View, Showing Mounting

CONNECTING THE RADIO

The antenna cable should be connected to the radio by inserting the jack into the socket provided on the side of the radio. Connect the battery cable to the hot side of the ammeter behind the instrument panel. The fuse should then be inserted into the cable receptor.

FINAL ADJUSTMENTS

The input circuit has been especially designed to be used with a low capacity antenna, of the fish pole or whip type.

Truetone Antennas are especially recommended for use with this radio.

To adjust the antenna trimmer condenser, carefully tune the receiver to a weak station at approximately 1100 kilocycles (K.C.). Remove the snap button covering the antenna trimmer (See Figure 2) and adjust the trimmer for maximum volume. A small screw driver will be needed for this purpose.

DIAL POINTER ADJUSTMENT

If it should become necessary to readjust the dial pointer for correct calibration, this may be easily done without removing the radio from the car by proceeding as follows:

A. Turn tuning knob to the right (clockwise) as far as it will go.
B. Remove snap button located on the right side of the case (viewed from the front), in the extreme upper front corner.
C. Insert screwdriver through hole in case and move dial pointer directly over white dot at high end of dial (1600KC).
D. Tune receiver to station of known frequency in the center of the dial and readjust pointer for more accurate indication, if necessary.
E. Replace snap button into hole in case.

CAUTION: Be careful not to scratch or damage dial scale or dial pointer when making this adjustment.

ACCESSORIES FURNISHED FOR INSTALLATION

All of the necessary parts that are needed for installing this receiver are furnished in the Mounting Parts Kit No. S84-192 and the Suppression Kit Assembly Part No. S84-230, as listed below. Also supplied are the rear mounting strap, Part No. B31-134, and the front mounting plate, Part No. B31-133.

S84-192 MOUNTING PARTS KIT

1 1/4" Bolt
2 1/4" Lock Washers
2 1/4" Hexagon Nuts
2 10-32 x 5/8" Screws
2 10-32 x 3/8" Screws
2 External Tooth Lock Washers
2 Internal Tooth Lock Washers
2 10-32 Hexagon Nuts
1 Washer Spacer

S84-230 SUPPRESSION KIT & MISC. PARTS

1 S84-233 "A" lead assem.
1 A43-10 Fuse
2 A52-256 Control knobs
1 A81-13 Sleeve (for fuse)
1 S84-193 Suppression Kit consisting of:
2 .5 MFD Condensers
1 Distributor Suppressor
20" Wire Braid

©John F. Rider

Compliments of www.nucow.com

MODEL D4818B

ELIMINATING MOTOR NOISE

IMPORTANT: Special care should be taken when mounting the radio to make sure all paint, grease, rust, etc., is removed from all three mounting points. A good electrical contact at these points will aid materially in eliminating motor noise.

GENERATOR CONDENSER

The generator condenser must be connected to the battery terminal of the generator in all cases. If your car is equipped with a generator using an automatic regulator, make sure the condenser IS NOT fastened to the field winding terminal. If in doubt, your local car dealer can advise you as to where the car manufacturer recommends connecting it.

DISTRIBUTOR SUPPRESSOR

Remove from distributor cap the high tension lead from the distributor. Cut the lead two inches from the end, and screw the distributor resistor on to the coil lead, then screw the short length into the resistor and plug the cable into the distributor cap.

AMMETER CONDENSER

A .5 MFD bypass condenser is furnished for attaching to the ammeter. This should be connected to either side of the ammeter with the ground lug fastened to a good ground nearby. In most cases the use of this condenser, the distributor suppressor, and the generator condenser, will eliminate all objectionable ignition interference.

ELECTRICAL ACCESSORIES

In some cases, it may be found that car accessories such as electric heaters, lighters, automatic relays, or gauges, may cause interference while in operation. Proper procedure in such cases is to try another by-pass condenser from ground to the suspected accessory until the source of the interference is found. The condenser then should be permanently mounted in this location.

HIGH AND LOW TENSION LEADS

In many cases the low tension battery leads, etc., are grouped together with the high tension wires. These leads will very often pick up motor noise and feed it into the receiver through the battery circuit. In cases such as these it will be necessary to separate the low tension from the high tension wires and run them through another hole if they run from the engine compartment up to the instrument panel. This condition is particularly true on the V-8 Ford, as the battery and primary leads run through a special tube which also houses the high tension leads. Shield and ground these leads.

IGNITION COILS

In cars where the ignition coil is located on the back side of the instrument panel it is often necessary to use an additional condenser. It must be installed from the battery side of the ignition coil to the closest ground on the instrument panel.

Short leads are very important. Where coils are mounted either on the instrument panel or in the driver's compartment, it may be necessary to shield the high tension lead from the coil to the distributor.

WHEEL STATIC

Wheel Static is a form of interference caused by the rotation of the front wheels of the car, and it is, of course, only noticed when the car is in motion. If this form of interference is present it can be eliminated by installing wheel static collector springs between the inner hub cap and the spindle shaft.

BONDING OF FIRE WALL RODS AND TUBES

Bonding the steering column to the fire wall with a short braid may also be effective. Clean the paint from the steering column at the fire wall where the column enters the motor compartment, and solder on a short piece of braid. Ground the end of the braid to the fire wall.

In some cases it may be necessary to ground the tubes and rods coming through the fire wall in order to reduce the interference. Clean them with emery cloth and spot-solder the braid, fastening the end under a convenient screw. A 1/4" piece of wire braid 20 inches long is furnished in the suppression kit assembly for this purpose.

©John F. Rider

Compliments of www.nucow.com

ELECTRICAL SPECIFICATIONS

Power Supply.....6.3 volts DC
Current .....5.5 amp. average
Frequency Range.....540 to 1600 KC
I. F. Frequency.....455 KC
Speaker.....4" P. M.
Power Output.....1.2 watts, undistorted
2.5 watts, maximum
Sensitivity.....10 microvolts average for 1 watt output
Selectivity...40 KC broad at 1000 times signal, at 1000 KC

The tube compliment of this receiver is as follows:

1—6SK7GT—R. F. Amplifier.

1—6SA7GT—Converter.

1—6SK7GT—I.F. Amplifier.

1—6SQ7—Detector—AVC—1st audio.

1—6V6GT—Power output.

1—6X5GT—Rectifier.

SERVICE NOTES

Voltages taken from the different points of the circuit to the chassis are measured with volume control in maximum position, all tubes in their sockets, no signal applied, and with a volt meter having a resistance of 20,000 ohms per volt. These voltages are clearly shown on the voltage chart, (Fig. 4).

All voltages should be measured with an input voltage of 6.3 volts DC.

To check for open by-pass condensers, shunt each condenser with another one having the same capacity and voltage rating which is known to be good until the defective unit is located.

ALIGNING INSTRUCTION

Never attempt any adjustments on this receiver unless it becomes necessary to replace a coil or transformer, or the adjustments have been tampered with in the field. Always make certain that other circuit components, such as tubes, condensers, resistors, etc., are normal before proceeding with realignment.

If realignment is necessary follow the instructions given under the heading "ALIGNMENT PROCEDURE". After realignment has been completed repeat the procedure as a final check.

INSTRUCTIONS FOR REMOVING CHASSIS FROM THE CASE

The bottom cover (the one with the speaker louvers) can be removed to permit servicing of major components, such as tubes and vibrator, by removing the eight (8) screws holding it to the top cover. There are three (3) screws on each side, one (1) in the rear, and one (1) in the front.

CAUTION: Before attempting to remove the top cover, to service condensers, resistors, etc., the screw connecting the spark plate to the "A" terminal (inside case) must be removed. This is a round head screw, and is located on the rear of the case, close to the mounting stud bolt. It is recessed in a ½ inch hole in the case itself, thereby permitting contact with the spark plate.

After removing the spark plate screw, remove the two knobs by pulling forward and remove the eight (8) screws securing the cover to the chassis. Lift the chassis at the rear, at the same time moving it away from the front of the case so that the volume and tuning shafts will clear the holes in the cover.

NOTE: When reinstalling the chassis into the case, be sure the screw connecting the spark plate to the "A" terminal (inside case) is tightened very securely, otherwise the receiver will not operate properly.

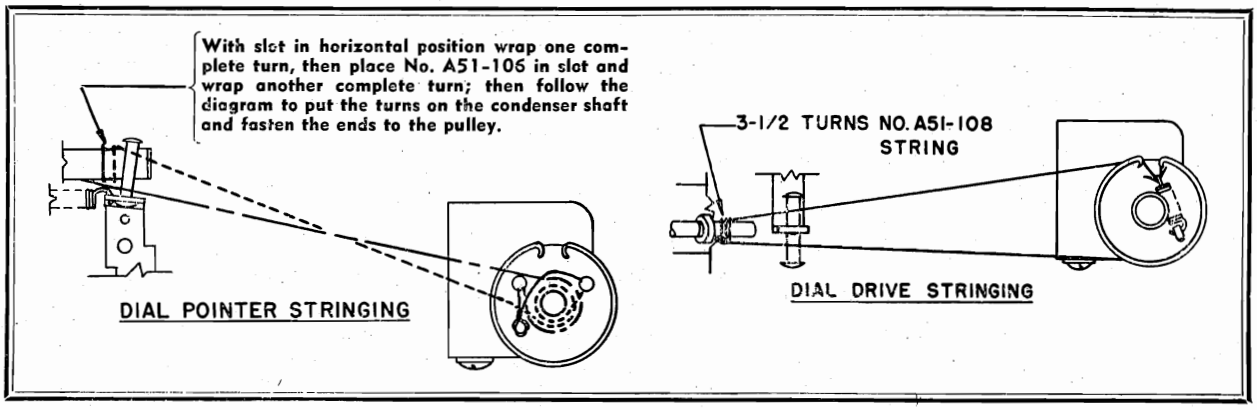

© John F. Rider

Compliments of www.nucow.com

MODEL D4818B

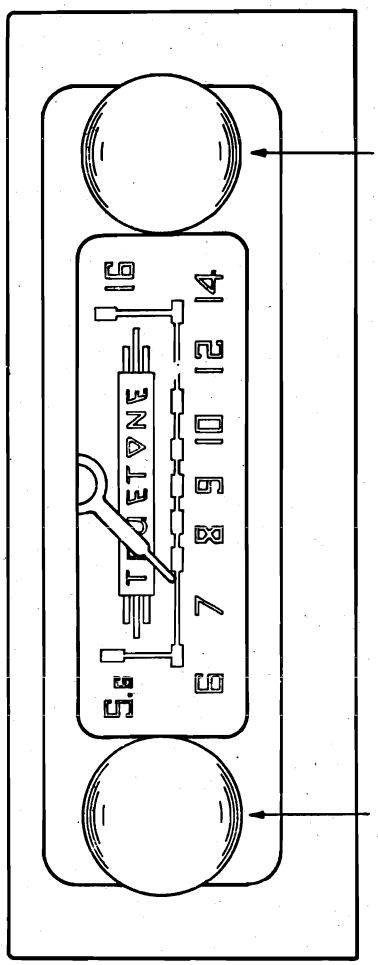

Fig. 1. Front View

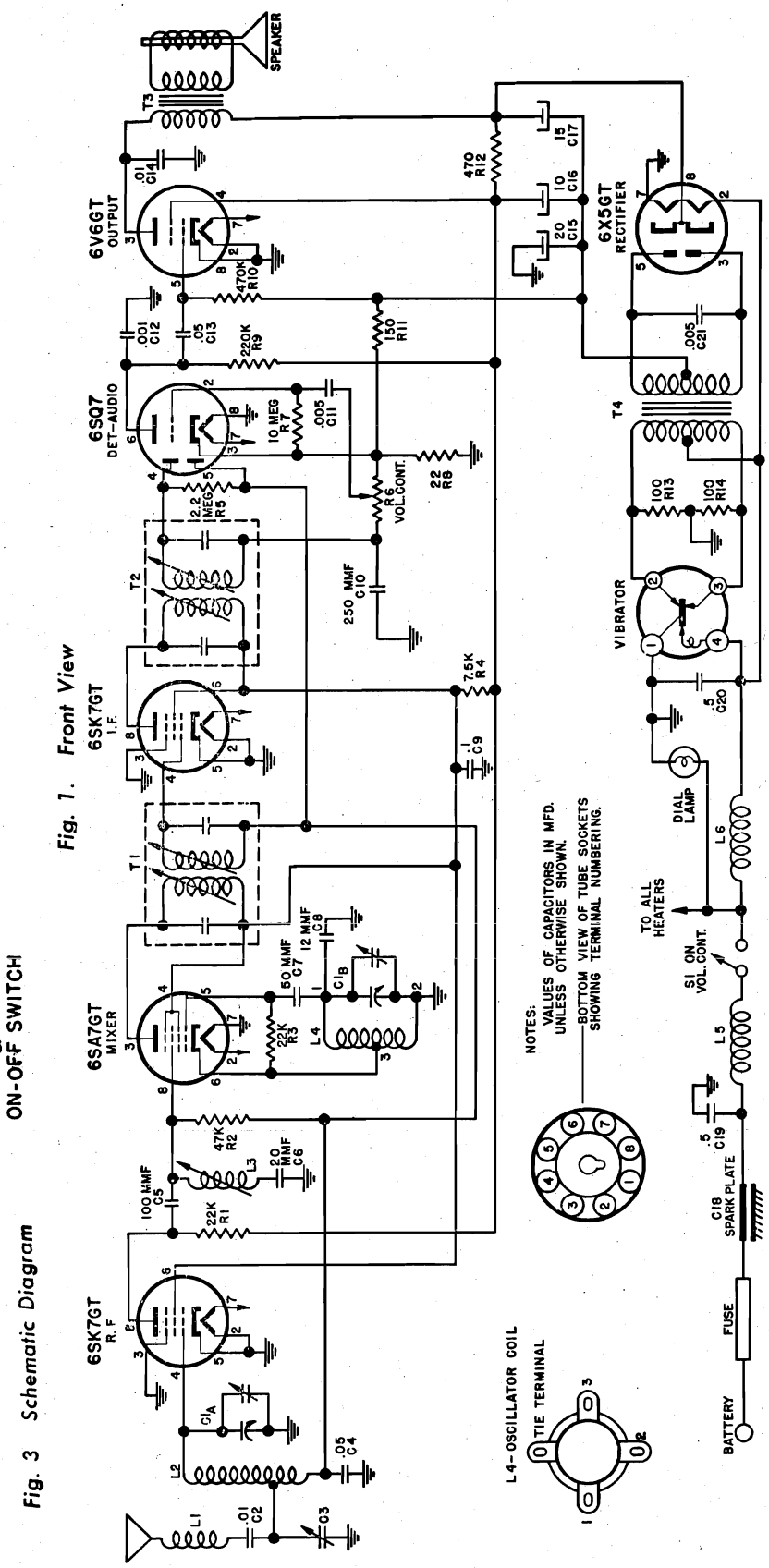

Fig. 3 Schematic Diagram

©John F. Rider

Compliments of www.nucow.com

ALIGNMENT PROCEDURE

Volume control—Maximum, all adjustments.

No signal applied to antenna.

Power input—6.3 volts.

Connect dummy antenna in series with output lead of signal generator.

Connect output meter across voice coil.

Connect ground lead of signal generator to chassis.

Repeat alignment procedure as a final check.

The following equipment is necessary for proper alignment:

Signal generator that will provide the test frequencies as listed, modulated 400 cycles, 30%.

Non-metallic screwdriver.

Output meter.

Dummy antennas—.1 MFD., 75 MMFD.

For alignment points refer to Figures 5 and 6.

Dial Setting	*Generator Frequency*	*Dummy Ant.*	*Generator Connections*	*Trimmer Reference*	*Trimmer Adjustment*	*Trimmer Function*
Fully Open	455 KC	.1 MFD.	6SA7 Grid	T2	Maximum	Output I.F.
Fully Open	455 KC	.1 MFD.	6SA7 Grid	T1	Maximum	Input I.F.
Fully Open	455 KC	75 MMFD.	Ant. lead	L3	Minimum	Wave trap
Fully Open	1600 KC	75 MMFD.	Ant. lead	C1B	Maximum	Oscillator
Tune in signal from generator	1400 KC	75 MMFD.	Ant. lead	C19	Maximum	Antenna

NOTE: The antenna trimmer condenser, C3, (see Fig. 2) should be adjusted after the radio is installed in the car. Tune the receiver to a weak station at about 1100 KC and adjust this trimmer for maximum volume.

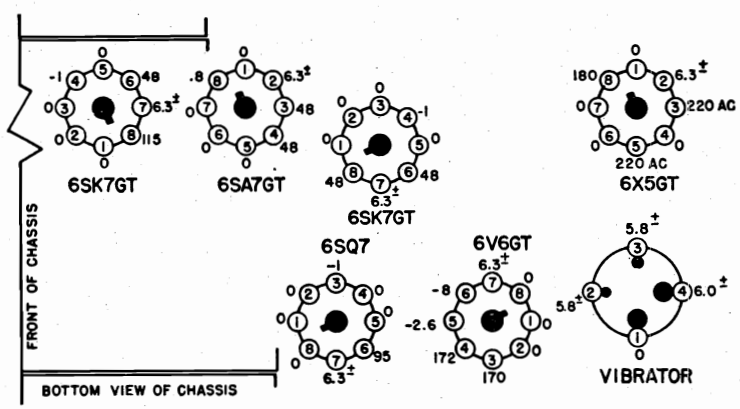

Fig. 4 Socket Voltages

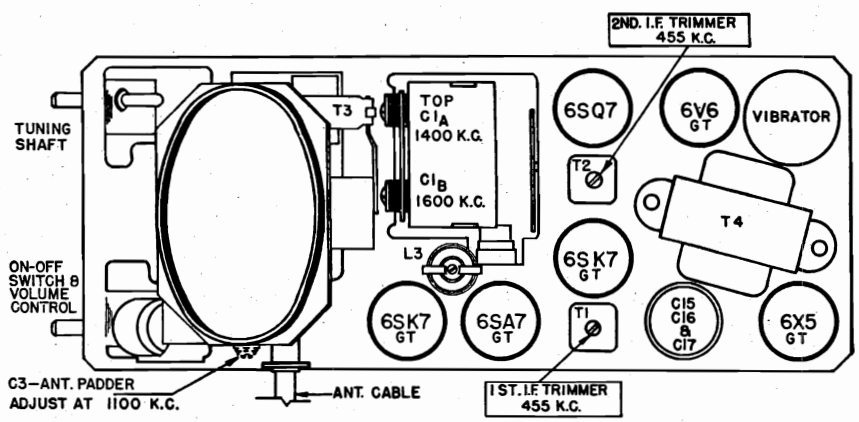

Fig. 5 Tube and Trimmer Locations

©John F. Rider

Compliments of www.nucow.com

MODEL D4318B

C1A, C1B	A19-201	Variable condenser
C2, C14	A16-192	.01 MFD 400 volt condenser
C3	A20-145	Trimmer condenser
C4	A16-189	.05 MFD 400 volt condenser
C5	A15-196	100 MMFD ceramic condenser
C6	A15-202	20 MMFD ceramic condenser
C7	A15-204	50 MMFD ceramic condenser
C8	A15-205	12 MMFD ceramic condenser, temp. comp.
C9	A16-187	.1 MFD 400 volt condenser
C10	A15-176	250 MMFD mica condenser
C11	A16-190	.005 MFD 600 volt condenser
C12	A16-195	.001 MFD ceramic condenser
C13	A16-193	.05 MFD 600 volt condenser
C15	A18-293	20 MFD 25 volt electrolytic condenser
C16		10 MFD 350 volt electrolytic condenser
C17		15 MFD 350 volt electrolytic condenser
C19, C20	A16-184	.5 MFD 100 volt condenser
C21	A16-185	.005 MFD 1600 volt oil filled condenser

RESISTORS

R1, R3	A60-659	22K ohm ½ watt 20% resistor
R2	A60-685	47K ohm ½ watt 20% resistor
R4	A60-769	7.5K ohm 2 watt 10% resistor
R5	A60-726	2.2 megohm ½ watt 20% resistor
R6	A24-177	Volume control, 500,000 ohm, with switch
R7	A60-728	10 megohm ½ watt 20% resistor
R8	A60-768	22 ohm ½ watt 10% resistor
R9	A60-667	220K ohm ½ watt 20% resistor
R10	A60-731	470K ohm ½ watt 20% resistor
R11	A60-767	150 ohm ½ watt 10% resistor
R12	A60-770	470 ohm ½ watt 10% resistor
R13, R14	A60-752	100 ohm ½ watt 10% resistor

COILS AND TRANSFORMERS

L1	A10-527	Antenna Loading Coil
L2	B10-511	Antenna Coil
L3	A10-510	I.F. Trap Coil
L4	A10-512	Oscillator Coil
L5	A33-229	Choke, "A" Line
L6	A33-228	Choke, vibrator hash
T1	A10-508	1st I.F. Transformer
T2	A10-509	2nd I.F. Transformer
T3	B80-242	Output Transformer (Part of Speaker, not furnished separately)
T4	B80-243	Power transformer

DIAL PARTS

A11-303	Bracket, Dial Scale
B11-328	Bracket, String Guide
A72-29	Bushing, Tuning Shaft Bearing
A70-130	Clip, Spring, for Tuning Shaft
A48-43	Dial Crystal
A58-55	Dial Pointer
B67-516	Dial Scale
A28-101	Gasket for Speaker
A52-256	Knob
A11-329	Link, String Guide
A89-10	Pilot Light, Type G.E. No. 422
A65-37	Rivet, Shoulder, for Dial Pointer Stringing
A65-41	Rivet, Shoulder, for String Guide Brkt. and Link
A65-12	Rivet, Shoulder, for Dial Drive Stringing
A75-70	Shaft, tuning
A75-74	Shaft, for Dial Pointer
A70-132	Spring, for Pilot Light Socket
A70-133	Spring, Dial Drive String Tension
A70-142	Spring, Pointer Drive String Tension
A51-106	String, Pointer Travel, 17"
A51-108	String, Condenser Drive, 19"

MISCELLANEOUS

S84-233	"A" lead assembly
A83-421	Clip, I.F. Transformer Mounting
A83-517	Clip, Oscillator Coil Mounting
A43-10	Fuse, 15 Amp.
A47-112	Grommet, rubber, (Spkr. & Gang mounting)
B31-134	Mounting strap, rear
B31-133	Mounting Plate, Front
S84-192	Mounting parts kit
A87-38	Receptacle, Antenna Cable
B79-362	Speaker, 4" P.M. (includes Output Transformer)
S84-193	Suppression Kit Assembly
A34-105	Vibrator
A83-519	Wiper, grounding, for case covers

Note: Tubular condensers must be high temperature (85°C) wax type.

©John F. Rider

Compliments of www.nucow.com

MODEL D1034B

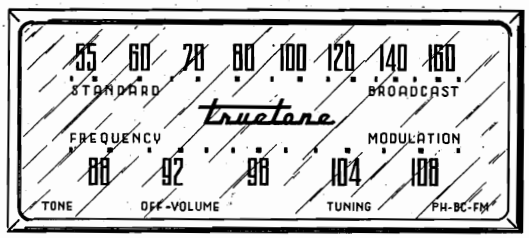

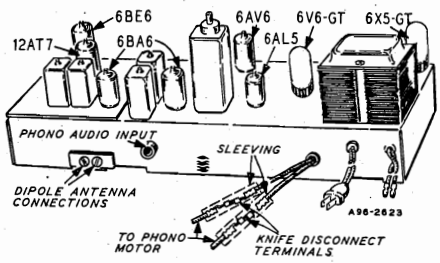

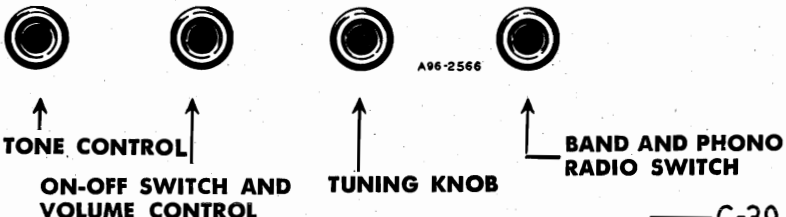

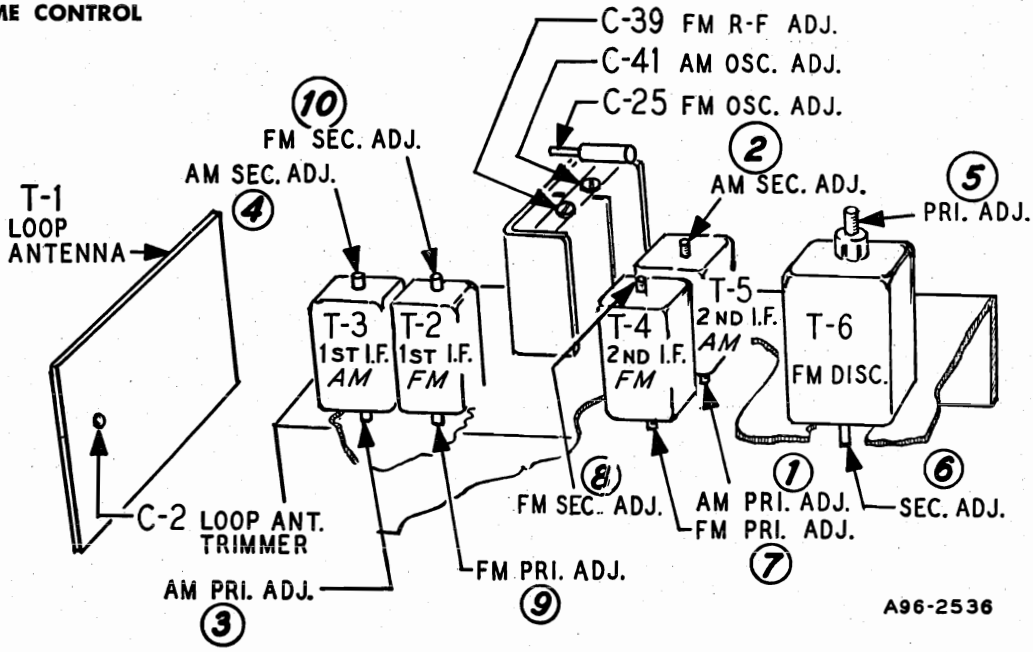

DRIVE CORD REPLACEMENT

Replacement of the drive cord may be accomplished as shown in the illustration. For this purpose use the new drive cord assembly listed in the Replacement Parts List. Turn the gang condenser until the plates are fully meshed Then install the string as shown, winding three turns counter-clockwise around the tuning shaft with the turns progressing away from the chassis. After the cord is installed, rotate the tuning shaft several times in order to take up any slack in the cord.

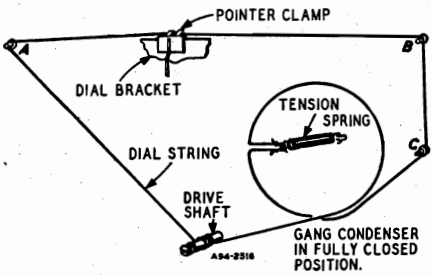

ELECTRICAL SPECIFICATIONS

Power Output—
117 volts AC—40 watts
60 watts phono operating

Power Output—
1.9 watts maximum
.8 watts 10% distortion

Speaker—8 inch PM dynamic

Frequency Ranges—
Broadcast 540-1600 KC
Frequency modulation 88-108 MC

Intermediate Frequency—
AM 455 KC — FM 10.7 MC

Selectivity — AM — 45 KC broad at 1000 times signal, measured at 1000 KC

I.F. FM—200 KC broad at 2 times down

I.F. FM—950 KC broad at 200 times down

AM Sensitivity—(For .5 watt output with external antenna)
25 microvolts average

FM Sensitivity—(For .5 watt output)
25 microvolts average

©John F. Rider

Compliments of www.nucow.com

MODEL D1034B

ALIGNMENT PROCEDURES

AM STAGES

The following is required for aligning:
An All Wave Signal Generator Which Will Provide an Accurately Calibrated Signal at the Test Frequencies as Listed.
Output Indicating Meter, Non-Metallic Screwdriver, Dummy Antennas — .1 mf, and 50mmf.

Volume Control Maximum all Adjustments.
Connect Radio Chassis to Ground Post of Signal Generator with a Short Heavy Lead.
Allow Chassis and Signal Generator to "Heat Up" for Several Minutes.

SIGNAL GENERATOR						
FREQUENCY SETTING	CONNECT GENERATOR OUTPUT TO	THROUGH DUMMY ANTENNA	CONNECT GROUND TO	GANG CONDENSER SETTING	ADJUST	ADJUST FOR
455 KC	Control Grid 1st 6BA6 Pin No. 1	.1 mf	Chassis Base	Rotor Fully Open	2nd I.F. Pri. (1) and Sec. (2)	Maximum Output
455 KC	Control Grid 6BE6 Pin No. 7 1st Det.	.1 mf	Chassis Base	Rotor Fully Open	1st I.F. Pri. (3) and Sec. (4)	Maximum Output
455 KC	Control Grid 6BE6 Pin No. 7	.1 mf	Chassis Base	Rotor Fully Open	2nd I.F. Pri. (1) and Sec. (2)	Maximum Output
1620 KC	Control Grid 6BE6 Pin No. 7	.1 mf	Chassis Base	Rotor Fully Open	Oscillator C-41	Maximum Output.
1400 KC	External Antenna Terminal	50 mmf	Chassis Base	Turn Rotor to Max. Output. Set Pointer to 1400 KC See Note A	Antenna C-2	Maximum Output

NOTE A—If the pointer is not at 1400 KC on the dial, reset pointer to the 1400 KC mark on the dial scale.

FM STAGES

The following is required for aligning:
An accurately calibrated signal generator providing unmodulated signals at the test frequencies listed below.
Non-metallic screwdriver.
Dummy Antennas and I-F Loading Resistor—2500 mmf, 300 ohms

Zero center scale DC vacuum tube voltmeter having a range of approximately 3 volts.
(If a zero center scale meter is not available, a standard scale vacuum tube voltmeter may be used by reversing the meter connections for negative readings).
Allow chassis and signal generator to "Heat Up" for several minutes.

	SIGNAL GENERATOR						
	FREQUENCY SETTING	CONNECT GENERATOR OUTPUT TO	THROUGH DUMMY ANTENNA	BAND SWITCH SETTING	GANG CONDENSER SETTING	ADJUST	ADJUST FOR
Discriminator	10.7 MC	6BA6 2nd I-F Pin 1 and Chassis	2500 mmf	FM	Rotor Fully Open	Disc. Pri. (5) Note A	Maximum Deflection
	10.7 MC	6BA6 2nd I-F Pin 1 and Chassis	2500 mmf	FM	Rotor Fully Open	Disc. Sec. (6) Note B	
I-F	10.7 MC Note C	6BA6 1st I-F Pin 1 and Chassis	2500 mmf	FM	Rotor Fully Open	2nd I-F Pri. (7) Sec. (8) Note D	Maximum Deflection
Discriminator	10.7 MC	6BA6 1st I-F Pin 1 and Chassis	2500 mmf	FM	Rotor Fully Open	Disc. Pri. (5) Note D	Maximum Deflection
I-F	10.7 MC	Junction C-32A & B (Dual 100 mmf cond.) And chassis	2500 mmf	FM	Rotor Fully Open	1st I-F Pri. (9) & Sec. (10) 2nd I-F Pri. (7) & Sec. (8) Disc. Pri. (5) In Order Shown Note D	Maximum Deflection
	10.7 MC	Same as above	2500 mmf	FM	Rotor Fully Open	Disc. Sec. (6) Note B	
RECHECK I-F ADJUSTMENTS IN ORDER GIVEN							
Oscillator	108.5	Disconnect built-in dipole antenna and connect generator to dipole terminals with resistor in series.	300 ohms	FM	Rotor Fully Open	Osc. C-25	Maximum Deflection
Antenna	104.5	Same as above	300 ohms	FM	Tune rotor for max. AVC voltage	Ant. C-39	Maximum Deflection
RECHECK ANTENNA & OSC. ADJUSTMENTS IN ORDER GIVEN							

FM ALIGNMENT NOTES

NOTE A—The zero center scale DC vacuum tube voltmeter is to be connected between chassis ground and the AVC line. A signal of .1 volt must be fed into the receiver for this adjustment.
Note output voltage on the zero center DC vacuum tube voltmeter.

NOTE B—Disconnect zero center DC vacuum tube voltmeter from AVC and connect it at the audio takeoff point at the 27 K ohm resistor (R-10) and its junction with the terminal strip. Adjust for zero voltage indication.

NOTE C—AM I-F coils must be aligned before attempting to align the FM I-F coils.

NOTE D—Connect zero center DC vacuum tube voltmeter as in Note A. Adjust input to give same output on the zero center DC vacuum tube voltmeter as in Note A.

©John F. Rider

Compliments of www.nucow.com

MODEL D1034B

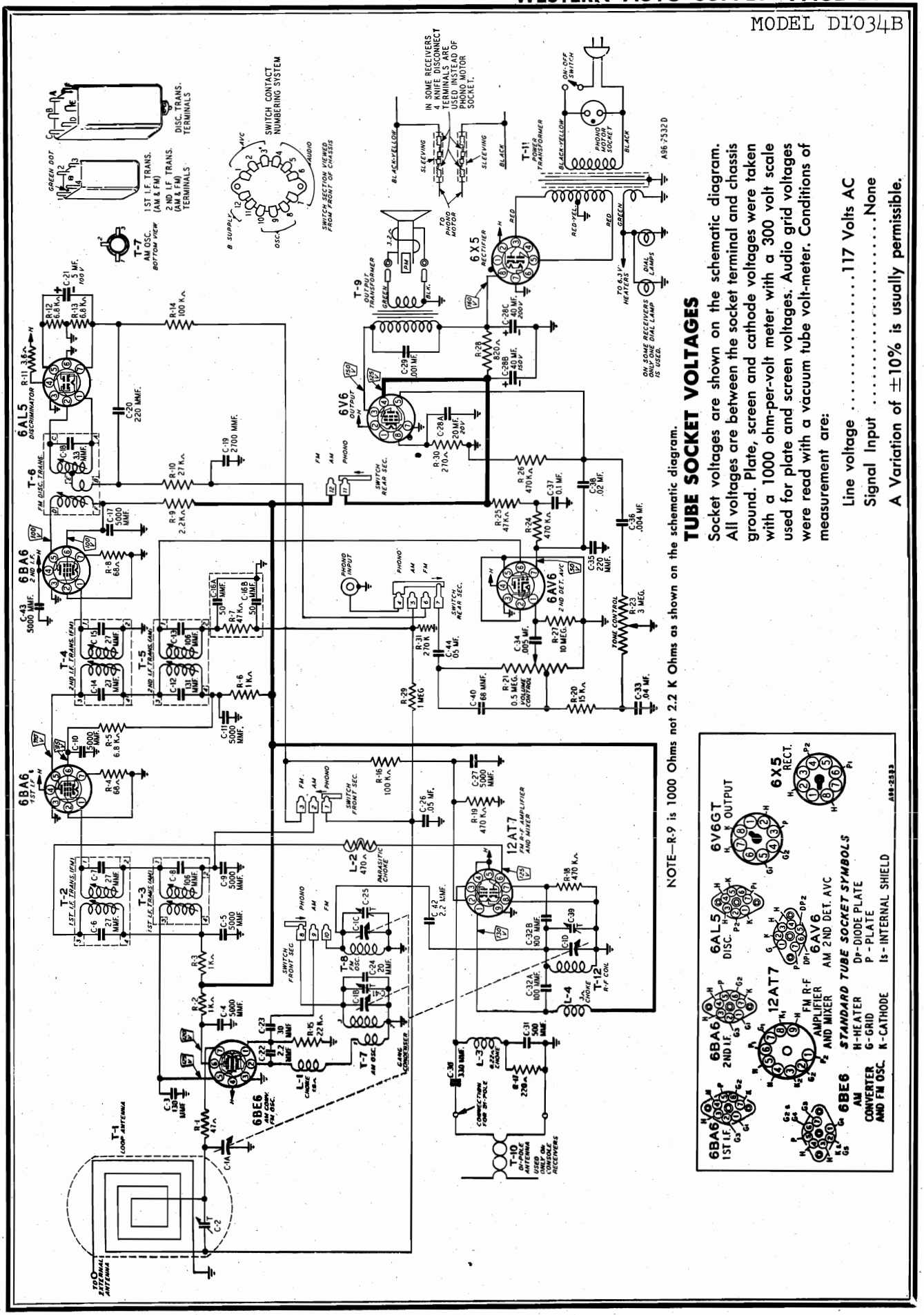

TUBE SOCKET VOLTAGES

Socket voltages are shown on the schematic diagram. All voltages are between the socket terminal and chassis ground. Plate, screen and cathode voltages were taken with a 1000 ohm-per-volt meter with a 300 volt scale used for plate and screen voltages. Audio grid voltages were read with a vacuum tube volt-meter. Conditions of measurement are:

Line voltage .....117 Volts AC
Signal Input .....None
A Variation of ±10% is usually permissible.

©John F. Rider

Compliments of www.nucow.com

MODEL D1034B

REPLACEMENT PARTS LIST

NOTICE: There is a model number label on the chassis. This label identifies the receiver as to chassis and issue letter. When ordering parts or writing, give ALL information on this label.

MISCELLANEOUS

12A477	8" P.M. Speaker
4X1082	Escutcheon
10X759	Knob
13X546	Line Cord & Plug Assembly
2A393	Band Change Switch
3A435	Molded Octal Tube Socket
3A305	Phono Socket
3A426	Tube Socket (1st 6BA6)
3A443	Tube Socket (12AT7)
3A427	Tube Socket (6BE6)
3A439	Tube Socket (Miniature)
	Cabinet No. 054

CAPACITORS

C-1	14A209	Gang Condenser Assembly		
C-2	17A256	2-24 mmf		Trimmer
C-3	47X559	130 mmf		Molded Mica
C-4, C-5, C-9, C-10, C-11, C-17, C-27, C-43	47X507	5000 mmf		Ceramic
C-6, C-7	Part of T-2 (1st I-F Trans. FM)			
C-8	Part of T-3 (1st I-F Trans. AM)			
C-12, C-13	Part of T-5 (2nd I-F Trans. AM)			
C-14, C-15	Part of T-4 (2nd I-F Trans. FM)			
C-16A, C-16B	47X112	50-50 mmf		Dual Mica
C-18	Part of T-6 (Discriminator Trans.)			
C-19	47X492	2700 mmf		Molded Mica
C-20, C-35	47X468	220 mmf		Ceramic
C-21	45X361	5 mf	100 V	Dry Electrolytic
C-22, C-42	47X557	2.2 mmf		Ceramic
C-23	47X558	30 mmf		Ceramic
C-24	47X516	20 mmf		Ceramic
C-25	17A255	1 8 mmf		Trimmer
C-26, C-44	B66503	.05 mf	200 V	Tubular
C-28A		20 mf	20 V	
C-28B	45X360	40 mf	150 V	Dry Electrolytic
C-28C		40 mf	200 V	
C-29	H66102	.001 mf	800 V	Tubular
C-30	47X470	330 mmf		Molded Mica
C-31	47X508	500 mmf		Ceramic
C-32A, C-32B	76X4	100 mmf		Dual Ceramic
C-33	B66403	.04 mf	200 V	Tubular
C-34	D66502	.005 mf	400 V	Tubular
C-36	B66402	.004 mf	200 V	Tubular
C-37	D66104	.1 mf	400 V	Tubular
C-38	D66203	.02 mf	400 V	Tubular
C-39, C-41	Part of C-1 (Gang Condenser)			
C-40	47X471	68 mmf		Ceramic

WG&C SERIES 327A96-054

RESISTORS

		Ohms	Watts	
R-1	B85470	47	0.5	Carbon
R-2, R-3, R-6, R-9	B85102	1000	0.5	Carbon
R-4, R-8	B84680	68	0.5	Carbon
R-5, R-12, R-13	B84682	6800	0.5	Carbon
R-7, R-25	B85473	47 K	0.5	Carbon
R-10	B85273	27 K	0.5	Carbon
R-11	43X233	3.6	0.5	Wirewound
R-14, R-16	B85104	100 K	0.5	Carbon
R-15	B85223	22 K	0.5	Carbon
R-17	B84221	220	0.5	Carbon
R-18, R-19, R-24, R-26	B85474	470 K	0.5	Carbon
R-20	B85153	15 K	0.5	Carbon
R-21	36X372	.5 meg.		Volume Control
R-23	40X285	3 meg.		Tone Control
R-27	B85106	10 meg.	0.5	Carbon
R-28	D84821	820	2.0	Carbon
R-29	B85105	1 meg.	0.5	Carbon
R-30	B84271	270	0.5	Carbon
R-31	B84274	270 K	0.5	Carbon

TRANSFORMERS AND COILS

L-1	35A5	Insulated Choke
L-2	9A2103	Parasitic Choke
L-3	35A9	Insulated Choke
L-4	35A8	Insulated Choke
T-1	9A2099	"B" Range Loop Antenna
T-2	9A2060	1st I-F Trans. (FM)
T-3	9A2062	1st I-F Trans. (AM)
T-4	9A2061	2nd I-F Trans. (FM)
T-5	9A2063	2nd I-F Trans. (AM)
T-6	9A2064	Discriminator Transformer
T-7	9A2065	Oscillator Coil (AM)
T-8	9A2067	Oscillator Coil (FM)
T-9	51X134	Output Transformer
T-10	9A2002	Dipole Antenna
T-11	53X291	Power Transformer
T-12	9A2066	Antenna Coil (FM)

DIAL AND DRIVE ASSEMBLY

58X733	Dial Glass
15X260	Pointer
19X192	"C" Washer (Mtg. Drive Shaft)
6X66	Rubber Grommet
25X1616	Dial Bracket
28X113	Drive Cord Tension Spring
7A103	No. 47 Pilot Light
7A199	Pilot Light Socket Assembly
10X38	Drive Cord Assembly
26X486	Drive Shaft

TYPE G.I. — 28A169 RECORD CHANGER PARTS

G.I. 69-73657	Tone Arm
G.I. 55-73613	Plastic Stabilizer
G.I. 28A755782	Idler Wheel Assembly
G.I. 56-76507	Motor, 3 speed, 60 cycles, 105-125 Volts A.C.
E-V No. 33-4	Crystal Cartridge, complete with needle *Needle only

*When ordering needles, specify part number and letter stamped on Cartridge.

©John F. Rider

Compliments of www.nucow.com

MODEL D1034C

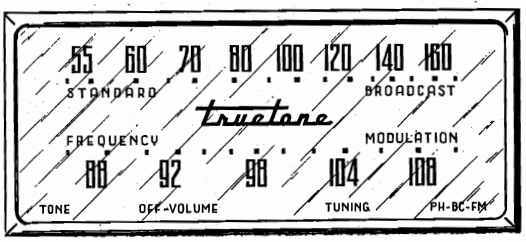

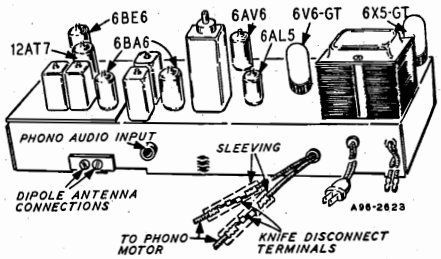

TONE CONTROL

ON-OFF SWITCH AND VOLUME CONTROL

TUNING KNOB

BAND AND PHONO RADIO SWITCH

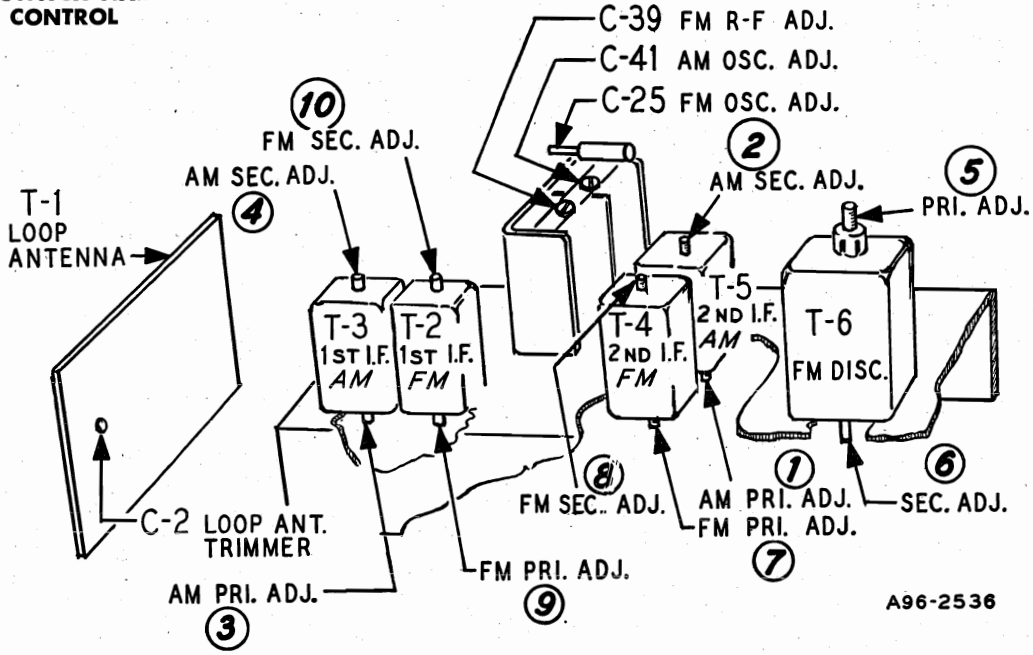

DRIVE CORD REPLACEMENT

Replacement of the drive cord may be accomplished as shown in the illustration. For this purpose use the new drive cord assembly listed in the Replacement Parts List. Turn the gang condenser until the plates are fully meshed Then install the string as shown, winding three turns counter-clockwise around the tuning shaft with the turns progressing away from the chassis. After the cord is installed, rotate the tuning shaft several times in order to take up any slack in the cord.

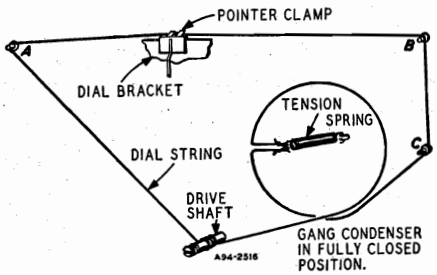

ELECTRICAL SPECIFICATIONS

Power Output—
117 volts AC—40 watts
60 watts phono operating

Power Output—
1.9 watts maximum
.8 watts 10% distortion

Speaker—8 inch PM dynamic

Frequency Ranges—
Broadcast 540-1600 KC
Frequency modulation 88-108 MC

Intermediate Frequency—
AM 455 KC — FM 10.7 MC

Selectivity — AM — 45 KC broad at 1000 times signal, measured at 1000 KC

I.F. FM—200 KC broad at 2 times down

I.F. FM—950 KC broad at 200 times down

AM Sensitivity—(For .5 watt output with external antenna)
25 microvolts average

FM Sensitivity—(For .5 watt output)
25 microvolts average

©John F. Rider

Compliments of www.nucow.com

MODEL D1034C

ALIGNMENT PROCEDURES

AM STAGES

The following is required for aligning:
An All Wave Signal Generator Which Will Provide an Accurately Calibrated Signal at the Test Frequencies as Listed.
Output Indicating Meter, Non-Metallic Screwdriver, Dummy Antennas — .1 mf, and 50mmf.

Volume Control Maximum all Adjustments.
Connect Radio Chassis to Ground Post of Signal Generator with a Short Heavy Lead.
Allow Chassis and Signal Generator to "Heat Up" for Several Minutes.

SIGNAL GENERATOR						
FREQUENCY SETTING	CONNECT GENERATOR OUTPUT TO	THROUGH DUMMY ANTENNA	CONNECT GROUND TO	GANG CONDENSER SETTING	ADJUST	ADJUST FOR
455 KC	Control Grid 1st 6BA6 Pin No. 1	.1 mf	Chassis Base	Rotor Fully Open	2nd I.F. Pri. (1) and Sec. (2)	Maximum Output
455 KC	Control Grid 6BE6 Pin No. 7 1st Det.	.1 mf	Chassis Base	Rotor Fully Open	1st I.F. Pri. (3) and Sec. (4)	Maximum Output
455 KC	Control Grid 6BE6 Pin No. 7	.1 mf	Chassis Base	Rotor Fully Open	2nd I-F Pri. (1) and Sec. (2)	Maximum Output
1620 KC	Control Grid 6BE6 Pin No. 7	.1 mf	Chassis Base	Rotor Fully Open	Oscillator C-41	Maximum Output
1400 KC	External Antenna Terminal	50 mmf	Chassis Base	Turn Rotor to Max. Output. Set Pointer to 1400 KC See Note A	Antenna C-2	Maximum Output

NOTE A—If the pointer is not at 1400 KC on the dial, reset pointer to the 1400 KC mark on the dial scale.

FM STAGES

The following is required for aligning:
An accurately calibrated signal generator providing unmodulated signals at the test frequencies listed below.
Non-metallic screwdriver.
Dummy Antennas and I-F Loading Resistor—2500 mmf, 300 ohms

Zero center scale DC vacuum tube voltmeter having a range of approximately 3 volts.
(If a zero center scale meter is not available, a standard scale vacuum tube voltmeter may be used by reversing the meter connections for negative readings).
Allow chassis and signal generator to "Heat Up" for several minutes.

	SIGNAL GENERATOR						
	FREQUENCY SETTING	CONNECT GENERATOR OUTPUT TO	THROUGH DUMMY ANTENNA	BAND SWITCH SETTING	GANG CONDENSER SETTING	ADJUST	ADJUST FOR
Discriminator	10.7 MC	6BA6 2nd I-F Pin 1 and Chassis	2500 mmf	FM	Rotor Fully Open	Disc. Pri. (5) Note A	Maximum Deflection
	10.7 MC	6BA6 2nd I-F Pin 1 and Chassis	2500 mmf	FM	Rotor Fully Open	Disc. Sec. (6) Note B	
I-F	10.7 MC Note C	6BA6 1st I-F Pin 1 and Chassis	2500 mmf	FM	Rotor Fully Open	2nd I-F Pri. (7) Sec. (8) Note D	Maximum Deflection
Discriminator	10.7 MC	6BA6 1st I-F Pin 1 and Chassis	2500 mmf	FM	Rotor Fully Open	Disc. Pri. (5) Note D	Maximum Deflection
I-F	10.7 MC	Junction C-32A & B (Dual 100 mmf cond.) And chassis	2500 mmf	FM	Rotor Fully Open	1st I-F Pri. (9) & Sec. (10) 2nd I-F Pri. (7) & Sec. (8) Disc. Pri. (5) In Order Shown Note D	Maximum Deflection
	10.7 MC	Same as above	2500 mmf	FM	Rotor Fully Open	Disc. Sec. (6) Note B	
RECHECK I-F ADJUSTMENTS IN ORDER GIVEN							
Oscillator	108.5	Disconnect built-in dipole antenna and connect generator to dipole terminals with resistor in series.	300 ohms	FM	Rotor Fully Open	Osc. C-25	Maximum Deflection
Antenna	104.5	Same as above	300 ohms	FM	Tune rotor for max. AVC voltage	Ant. C-39	Maximum Deflection
RECHECK ANTENNA & OSC. ADJUSTMENTS IN ORDER GIVEN							

FM ALIGNMENT NOTES

NOTE A—The zero center scale DC vacuum tube voltmeter is to be connected between chassis ground and the AVC line. A signal of .1 volt must be fed into the receiver for this adjustment.
Note output voltage on the zero center DC vacuum tube voltmeter

NOTE B—Disconnect zero center DC vacuum tube voltmeter from AVC and connect it at the audio takeoff point at the 27 K ohm resistor (R-10) and its junction with the terminal strip. Adjust for zero voltage indication.

NOTE C—AM I-F coils must be aligned before attempting to align the FM I-F coils.

NOTE D—Connect zero center DC vacuum tube voltmeter as in Note A. Adjust input to give same output on the zero center DC vacuum tube voltmeter as in Note A.

©John F. Rider

Compliments of www.nucow.com

MODEL D1034C

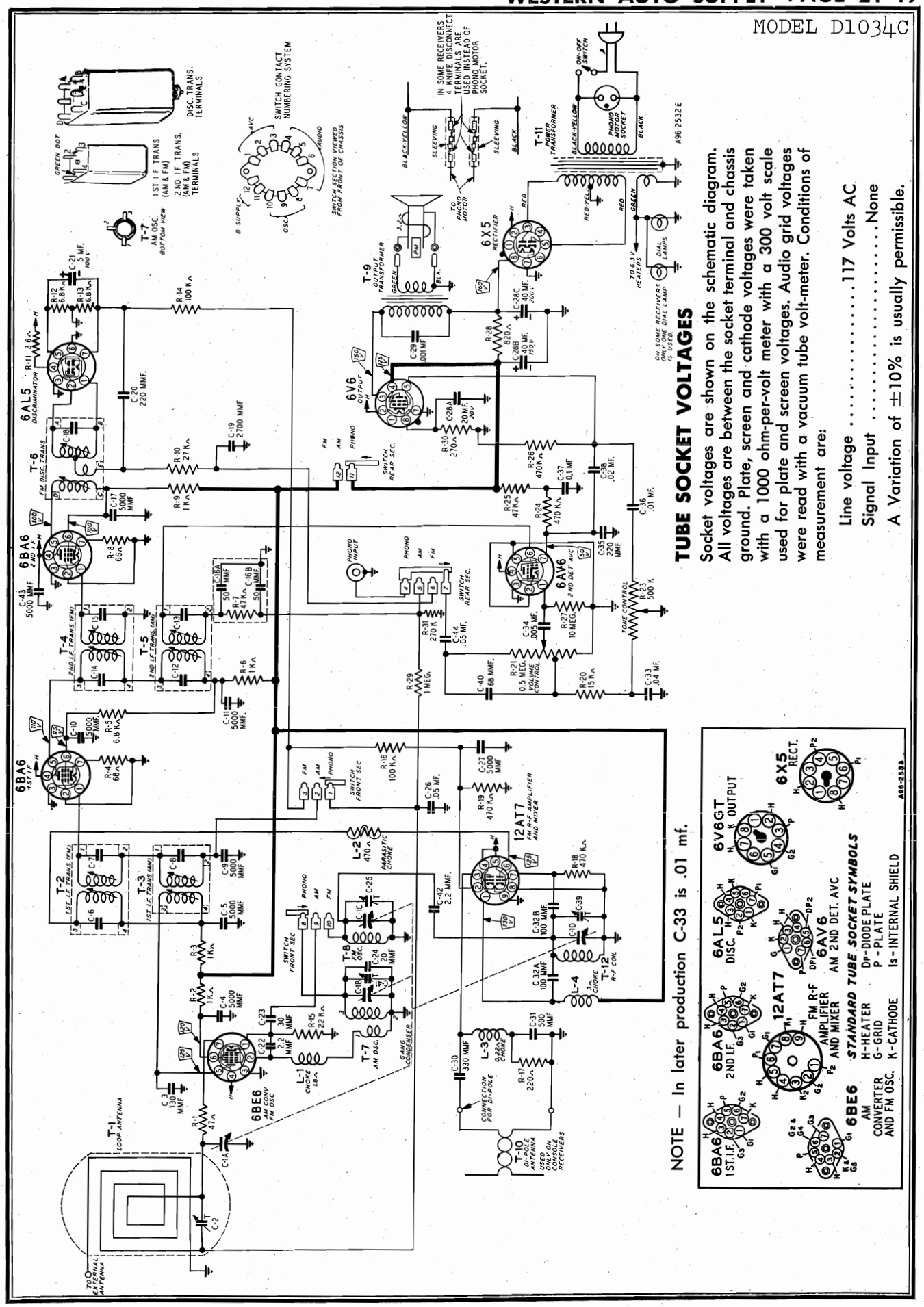

TUBE SOCKET VOLTAGES

Socket voltages are shown on the schematic diagram. All voltages are between the socket terminal and chassis ground. Plate, screen and cathode voltages were taken with a 1000 ohm-per-volt meter with a 300 volt scale used for plate and screen voltages. Audio grid voltages were read with a vacuum tube volt-meter. Conditions of measurement are:

Line voltage .....117 Volts AC
Signal Input .....None
A Variation of ±10% is usually permissible.

NOTE — In later production C-33 is .01 mf.

©John F. Rider

Compliments of www.nucow.com

MODEL D1034C

REPLACEMENT PARTS LIST

NOTICE: There is a model number label on the chassis. This label identifies the receiver as to chassis and issue letter. When ordering parts or writing, give ALL information on this label.

MISCELLANEOUS

12A477	8" P.M. Speaker
4X1082	Escutcheon
10A759	Knob
13X546	Line Cord & Plug Assembly
2A393	Band Change Switch
3A435	Molded Octal Tube Socket
3A305	Phono Socket
3A426	Tube Socket (1st 6BA6)
3A443	Tube Socket (12AT7)
3A427	Tube Socket (6BE6)
3A439	Tube Socket (Miniature)
	Cabinet No. 054

CAPACITORS

C-1	14A209	Gang Condenser Assembly		
C-2	17A256	2-24 mmf		Trimmer
C-3	47X559	130 mmf		Ceramic
C-4, C-5, C-9, C-10, C-11, C-17, C-27, C-43	47X507	5000 mmf		Ceramic
C-6, C-7	Part of T-2 (1st I-F Trans. FM)			
C-8	Part of T-3 (1st I-F Trans. AM)			
C-12, C-13	Part of T-5 (2nd I-F Trans. AM)			
C-14, C-15	Part of T-4 (2nd I-F Trans. FM)			
C-16A, C-16B	47X112	50-50 mmf		Dual Mica
C-18	Part of T-6 (Discriminator Trans.)			
C-19	47X492	2700 mmf		Molded Mica
C-20, C-35	47X468	220 mmf		Ceramic
C-21	45X361	5 mf	100 V	Dry Electrolytic
C-22, C-42	47X557	2.2 mmf		Ceramic
C-23	47X558	30 mmf		Ceramic
C-24	47X516	20 mmf		Ceramic
C-25	17A255	1-8 mmf		Trimmer
C-26, C-44	B66503	.05 mf	200 V	Tubular
C-28A		20 mf	20 V	
C-28B	45X360	40 mf	150 V	Dry Electrolytic
C-28C		40 mf	200 V	
C-29	H66102	.001 mf	800 V	Tubular
C-30	47X470	330 mmf		Molded Mica
C-31	47X508	500 mmf		Ceramic
C-32A, C-32B	76X4	100 mmf		Dual Ceramic
C-33, C-36	B66103	.01 mf	200 V.	Tubular
C-34	D66502	.005 mf	400 V.	Tubular
C-37	D66104	.1 mf	400 V	Tubular
C-38	D66203	.02 mf	400 V	Tubular
C-39, C-41	Part of C-1 (Gang Condenser)			
C-40	47X471	68 mmf		Ceramic

RESISTORS

		Ohms	Watts	
R-1	B85470	47	0.5	Carbon
R-2, R-3, R-6, R-9	B85102	1000	0.5	Carbon
R-4, R-8	B84680	68	0.5	Carbon
R-5, R-12, R-13	B84682	6800	0.5	Carbon
R-7, R-25	B85473	47 K	0.5	Carbon
R-10	B85273	27 K	0.5	Carbon
R-11	43X233	3.6	0.5	Wirewound
R-14, R-16	B85104	100 K	0.5	Carbon
R-15	B85223	22 K	0.5	Carbon
R-17	B84221	220	0.5	Carbon
R-18, R-19, R-24, R-26	B85474	470 K	0.5	Carbon
R-20	B85153	15 K	0.5	Carbon
R-21	36X372	.5 meg.		Volume Control
R-23	40X310	.5 meg.		Tone Control
R-27	B85106	10 meg.	0.5	Carbon
R-28	D84821	820	2.0	Carbon
R-29	B85105	1 meg.	0.5	Carbon
R-30	B84271	270	0.5	Carbon
R-31	B84274	270 K	0.5	Carbon

TRANSFORMERS AND COILS

L-1	35A5	Insulated Choke
L-2	9A2103	Parasitic Choke
L-3	35A9	Insulated Choke
L-4	35A8	Insulated Choke
T-1	9A2099	"B" Range Loop Antenna
T-2	9A2060	1st I-F Trans. (FM)
T-3	9A2062	1st I-F Trans. (AM)
T-4	9A2061	2nd I-F Trans. (FM)
T-5	9A2063	2nd I-F Trans. (AM)
T-6	9A2161	Discriminator Transformer
T-7	9A2065	Oscillator Coil (AM)
T-8	9A2067	Oscillator Coil (FM)
T-9	51X134	Output Transformer
T-10	9A2002	Dipole Antenna *
T-11	53X291	Power Transformer
T-12	9A2066	Antenna Coil (FM)

DIAL AND DRIVE ASSEMBLY

58X733	Dial Glass
15X260	Pointer
19X192	"C" Washer (Mtg. Drive Shaft)
6X66	Rubber Grommet
25X1616	Dial Bracket
28X113	Drive Cord Tension Spring
7A103	No. 47 Pilot Light
7A199	Pilot Light Socket Assembly
10X38	Drive Cord Assembly
26X486	Drive Shaft

TYPE G.I. — 28A169 RECORD CHANGER PARTS

G.I. 69-73657	Tone Arm
G.I. 55-73613	Plastic Stabilizer
G.I. 28A755782	Idler Wheel Assembly
G.I. 56-76507	Motor, 3 speed, 60 cycles, 105-125 Volts A. C.
P-81	Crystal Cartridge, complete with needle *Needle only

*When ordering needles, specify part number and letter stamped on Cartridge.

©John F. Rider

Compliments of www.nucow.com

MODEL D1046C

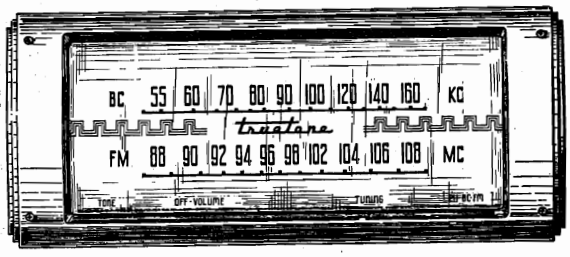

BROADCAST BAND

FM BAND

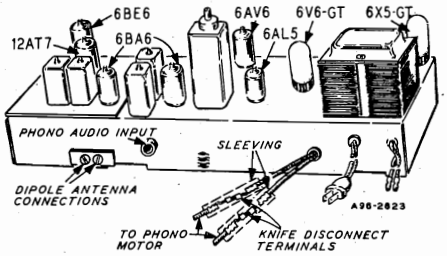

TONE CONTROL

ON-OFF SWITCH AND VOLUME CONTROL

TUNING KNOB

BAND AND PHONO RADIO SWITCH

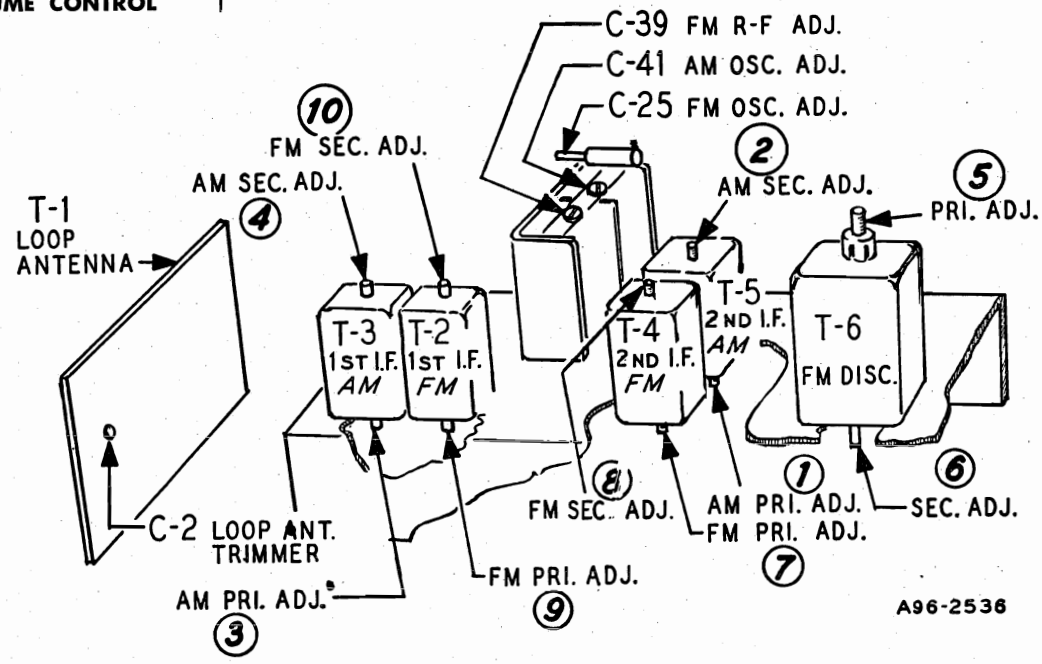

DRIVE CORD REPLACEMENT

Replacement of the drive cord may be accomplished as shown in the illustration. For this purpose use the new drive cord assembly listed in the Replacement Parts List. Turn the gang condenser until the plates are fully meshed Then install the string as shown, winding three turns counter-clockwise around the tuning shaft with the turns progressing away from the chassis. After the cord is installed, rotate the tuning shaft several times in order to take up any slack in the cord.

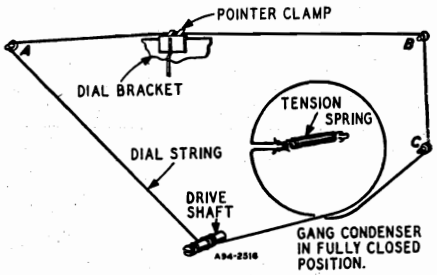

ELECTRICAL SPECIFICATIONS

Power Output—
117 volts AC—40 watts
60 watts phono operating

Power Output—
1.9 watts maximum
.8 watts 10% distortion

Speaker—8 inch PM dynamic

Frequency Ranges—
Broadcast 540-1600 KC
Frequency modulation 88-108 MC

Intermediate Frequency—
AM 455 KC — FM 10.7 MC

Selectivity — AM — 45 KC broad at 1000 times signal, measured at 1000 KC

I.F. FM—200 KC broad at 2 times down

I.F. FM—950 KC broad at 200 times down

AM Sensitivity—(For .5 watt output with external antenna)
25 microvolts average

FM Sensitivity—(For .5 watt output)
25 microvolts average

©John F. Rider

Compliments of www.nucow.com

MODEL D1046C

ALIGNMENT PROCEDURES

AM STAGES

The following is required for aligning:
An All Wave Signal Generator Which Will Provide an Accurately Calibrated Signal at the Test Frequencies as Listed.
Output Indicating Meter, Non-Metallic Screwdriver, Dummy Antennas — .1 mf, and 50mmf.

Volume Control Maximum all Adjustments.
Connect Radio Chassis to Ground Post of Signal Generator with a Short Heavy Lead.
Allow Chassis and Signal Generator to "Heat Up" for Several Minutes.

SIGNAL GENERATOR						
FREQUENCY SETTING	CONNECT GENERATOR OUTPUT TO	THROUGH DUMMY ANTENNA	CONNECT GROUND TO	GANG CONDENSER SETTING	ADJUST	ADJUST FOR
455 KC	Control Grid 1st 6BA6 Pin No. 1	.1 mf	Chassis Base	Rotor Fully Open	2nd I.F. Pri. (1) and Sec. (2)	Maximum Output
455 KC	Control Grid 6BE6 Pin No. 7 1st Det.	.1 mf	Chassis Base	Rotor Fully Open	1st I.F. Pri. (3) and Sec. (4)	Maximum Output
455 KC	Control Grid 6BE6 Pin No. 7	.1 mf	Chassis Base	Rotor Fully Open	2nd I.F. Pri. (1) and Sec. (2)	Maximum Output
1620 KC	Control Grid 6BE6 Pin No. 7	.1 mf	Chassis Base	Rotor Fully Open	Oscillator C-41	Maximum Output
1400 KC	External Antenna Terminal	50 mmf	Chassis Base	Turn Rotor to Max. Output. Set Pointer to 1400 KC See Note A	Antenna C-2	Maximum Output

NOTE A—If the pointer is not at 1400 KC on the dial, reset pointer to the 1400 KC mark on the dial scale.

FM STAGES

The following is required for aligning:
An accurately calibrated signal generator providing unmodulated signals at the test frequencies listed below.
Non-metallic screwdriver.
Dummy Antennas and I-F Loading Resistor—2500 mmf, 300 ohms

Zero center scale DC vacuum tube voltmeter having a range of approximately 3 volts.
(If a zero center scale meter is not available, a standard scale vacuum tube voltmeter may be used by reversing the meter connections for negative readings).
Allow chassis and signal generator to "Heat Up" for several minutes.

	SIGNAL GENERATOR						
	FREQUENCY SETTING	CONNECT GENERATOR OUTPUT TO	THROUGH DUMMY ANTENNA	BAND SWITCH SETTING	GANG CONDENSER SETTING	ADJUST	ADJUST FOR
Discriminator	10.7 MC	6BA6 2nd I-F Pin 1 and Chassis	2500 mmf	FM	Rotor Fully Open	Disc. Pri. (5) Note A	Maximum Deflection
	10.7 MC	6BA6 2nd I-F Pin 1 and Chassis	2500 mmf	FM	Rotor Fully Open	Disc. Sec. (6) Note B	
I-F	10.7 MC Note C	6BA6 1st I-F Pin 1 and Chassis	2500 mmf	FM	Rotor Fully Open	2nd I-F Pri. (7) Sec. (8) Note D	Maximum Deflection
Discriminator	10.7 MC	6BA6 1st I-F Pin 1 and Chassis	2500 mmf	FM	Rotor Fully Open	Disc. Pri. (5) Note D	Maximum Deflection
I-F	10.7 MC	Junction C-32A & B (Dual 100 mmf cond.) And chassis	2500 mmf	FM	Rotor Fully Open	1st I-F Pri. (9) & Sec. (10) 2nd I-F Pri. (7) & Sec. (8) Disc. Pri. (5) In Order Shown Note D	Maximum Deflection
	10.7 MC	Same as above	2500 mmf	FM	Rotor Fully Open	Disc. Sec. (6) Note B	
RECHECK I-F ADJUSTMENTS IN ORDER GIVEN							
Oscillator	108.5	Disconnect built-in dipole antenna and connect generator to dipole terminals with resistor in series.	300 ohms	FM	Rotor Fully Open	Osc. C-25	Maximum Deflection
Antenna	104.5	Same as above	300 ohms	FM	Tune rotor for max. AVC voltage	Ant. C-39	Maximum Deflection
RECHECK ANTENNA & OSC. ADJUSTMENTS IN ORDER GIVEN							

FM ALIGNMENT NOTES

NOTE A—The zero center scale DC vacuum tube voltmeter is to be connected between chassis ground and the AVC line. A signal of .1 volt must be fed into the receiver for this adjustment.
Note output voltage on the zero center DC vacuum tube voltmeter.

NOTE B—Disconnect zero center DC vacuum tube voltmeter from AVC and connect it at the audio takeoff point at the 27 K ohm resistor (R-10) and its junction with the terminal strip. Adjust for zero voltage indication.

NOTE C—AM I-F coils must be aligned before attempting to align the FM I-F coils.

NOTE D—Connect zero center DC vacuum tube voltmeter as in Note A. Adjust input to give same output on the zero center DC vacuum tube voltmeter as in Note A.

©John F. Rider

Compliments of www.nucow.com

MODEL D1046C

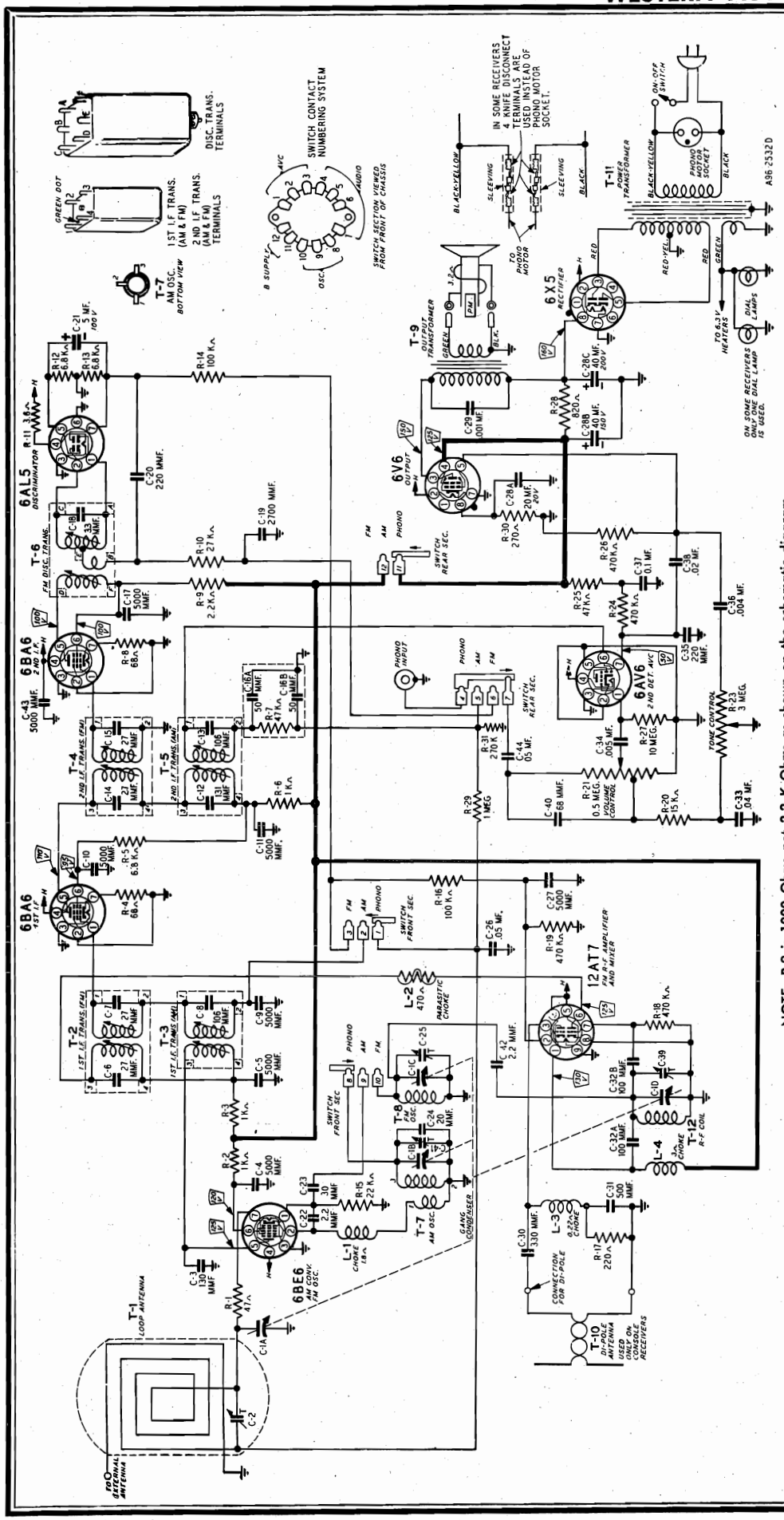

NOTE—R-9 is 1000 Ohms not 2.2 K Ohms as shown on the schematic diagram.

TUBE SOCKET VOLTAGES

Socket voltages are shown on the schematic diagram. All voltages are between the socket terminal and chassis ground. Plate, screen and cathode voltages were taken with a 1000 ohm-per-volt meter with a 300 volt scale used for plate and screen voltages. Audio grid voltages were read with a vacuum tube volt-meter. Conditions of measurement are:

Line voltage .....117 Volts AC
Signal Input .....None
A Variation of ±10% is usually permissible.

©John F. Rider

Compliments of www.nucow.com

MODEL. D1046C

REPLACEMENT PARTS LIST

MISCELLANEOUS

12A477	8" P.M. Speaker
4X1073	Escutcheon
10A758	Knob
13X546	Line Cord & Plug Assembly
2A395	Band Change Switch
3A435	Molded Octal Tube Socket
3A305	Phono Socket
3A426	Tube Socket (1st 6BA6)
3A443	Tube Socket (12AT7)
3A427	Tube Socket (6BE6)
3A439	Tube Socket (Miniature)
	Cabinet No. 952

CAPACITORS

C-1	14A209	Gang Condenser Assembly		
C-2	17A256	2-24 mmf		Trimmer
C-3	47X559	130 mmf		Molded Mica
C-4, C-5, C-9, C-10, C-11, C-17, C-27, C-43	47X507	5000 mmf		Ceramic
C-6, C-7	Part of T-2 (1st I-F Trans. FM)			
C-8	Part of T-3 (1st I-F Trans. AM)			
C-12, C-13	Part of T-5 (2nd I-F Trans. AM)			
C-14, C-15	Part of T-4 (2nd I-F Trans. FM)			
C-16A, C-16B	47X112	50-50 mmf		Dual Mica
C-18	Part of T-6 (Discriminator Trans.)			
C-19	47X492	2700 mmf		Molded Mica
C-20, C-35	47X468	220 mmf		Ceramic
C-21	45X361	5 mf	100 V	Dry Electrolytic
C-22, C-42	47X557	2.2 mmf		Ceramic
C-23	47X558	30 mmf		Ceramic
C-24	47X516	20 mmf		Ceramic
C-25	17A255	1 8 mmf		Trimmer
C-26, C-44	B66503	.05 mf	200 V	Tubular
C-28A		20 mf	20 V	
C-28B	45X360	40 mf	150 V	Dry Electrolytic
C-28C		40 mf	200 V	
C-29	H66102	.001 mf	800 V	Tubular
C-30	47X470	330 mmf		Molded Mica
C-31	47X508	500 mmf		Ceramic
C-32A, C-32B	76X4	100 mmf		Dual Ceramic
C-33	B66403	.04 mf	200 V	Tubular
C-34	D66502	.005 mf	400 V	Tubular
C-36	B66402	.004 mf	200 V	Tubular
C-37	D66104	.1 mf	400 V	Tubular
C-38	D66203	.02 mf	400 V	Tubular
C-39, C-41	Part of C-1 (Gang Condenser)			
C-40	47X471	68 mmf		Ceramic

WG&C SERIES 27A96-952

RESISTORS

		Ohms	Watts	
R-1	B85470	47	0.5	Carbon
R-2, R-3, R-6, R-9	B85102	1000	0.5	Carbon
R-4, R-8	B84680	68	0.5	Carbon
R-5, R-12, R-13	B84682	6800	0.5	Carbon
R-7, R-25	B85473	47 K	0.5	Carbon
R-10	B85273	27 K	0.5	Carbon
R-11	43X233	3.6	0.5	Wirewound
R-14, R-16	B85104	100 K	0.5	Carbon
R-15	B85223	22 K	0.5	Carbon
R-17	B84221	220	0.5	Carbon
R-18, R-19, R-24, R-26	B85474	470 K	0.5	Carbon
R-20	B85153	15 K	0.5	Carbon
R-21	36X381	.5 meg.		Volume Control
R-23	40X289	3 meg.		Tone Control
R-27	B85106	10 meg.	0.5	Carbon
R-28	D84821	820	2.0	Carbon
R-29	B85105	1 meg.	0.5	Carbon
R-30	B84271	270	0.5	Carbon
R-31	B84274	270 K	0.5	Carbon

TRANSFORMERS AND COILS

L-1	35A5	Insulated Choke
L-2	9A2103	Parasitic Choke
L-3	35A9	Insulated Choke
L-4	35A8	Insulated Choke
T-1	9A1972	"B" Range Loop Antenna
T-2	9A2060	1st I-F Trans. (FM)
T-3	9A2062	1st I-F Trans. (AM)
T-4	9A2061	2nd I-F Trans. (FM)
T-5	9A2063	2nd I-F Trans. (AM)
T-6	9A2064	Discriminator Transformer
T-7	9A2065	Oscillator Coil (AM)
T-8	9A2067	Oscillator Coil (FM)
T-9	51X134	Output Transformer
T-10	9A2003	Dipole Antenna
T-11	53X291	Power Transformer
T-12	9A2066	Antenna Coil (FM)

DIAL AND DRIVE ASSEMBLY

58X730	Dial Glass
15X251	Pointer
19X192	"C" Washer (Mtg. Drive Shaft)
6X66	Rubber Grommet
25X1610	Dial Bracket
28X113	Drive Cord Tension Spring
7A103	No. 47 Pilot Light
7A215	Pilot Light Socket Assembly
10X38	Drive Cord Assembly
26X510	Drive Shaft

TYPE G.I. — 28A169 RECORD CHANGER PARTS

G.I. 69-73657	Tone Arm
G.I. 55-73613	Plastic Stabilizer
G.I. 28A755782	Idler Wheel Assembly
G.I. 56-76507	Motor, 3 speed, 60 cycles, 105-125 Volts A.C.
E-V No. 33-4	Crystal Cartridge, complete with needle *Needle only

*When ordering needles, specify part number and letter stamped on Cartridge.

©John F. Rider

Compliments of www.nucow.com

MODELS H-305C8, H-306C8, Ch. V-2137-4

SPECIFICATIONS

FREQUENCY RANGES:

Amplitude Modulation .....540 to 1600 kc.
Frequency Modulation .....88 to 108 mc.

INTERMEDIATE FREQUENCIES:

Amplitude Modulation .....455 kc.
Frequency Modulation .....10.7 mc.

TUBE COMPLEMENT:

1 12AT7 .....R-F Amp. and Mixer (FM)
1 6BE6 .....H-F Osc. (AM/FM) and converter (AM)
1 6BA6 .....I-F Amp.
1 6BA6 .....I-F Driver (FM)
1 6AL5 .....Ratio Det. (FM)
1 6AV6 .....Det. & AVC (AM) and A-F Amp.
1 6V6GT .....Output Amp.
1 5Y3GT .....Rectifier

PILOT LAMPS:

2 Westinghouse No. 44.....6.3 v., 0.25 a.

POWER OUTPUT:

Undistorted .....3.5 watts
Maximum .....6 watts

LOUDSPEAKER: .....12" P.M.

OPERATING VOLTAGE:.....105 to 120 volts, 60 cycles A-C

POWER CONSUMPTION: .....110 watts

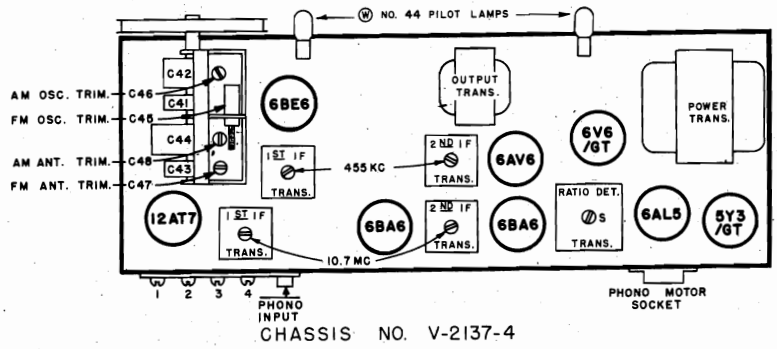

CHASSIS NO. V-2137-4

FIG. 1—TOP VIEW

©John F. Rider

Compliments of www.nucow.com

MODELS H-305C8, H-306C8, Ch. V-2137-4

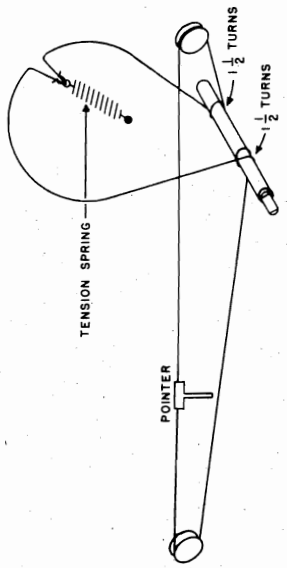

FIG. 3—DIAL DRIVE

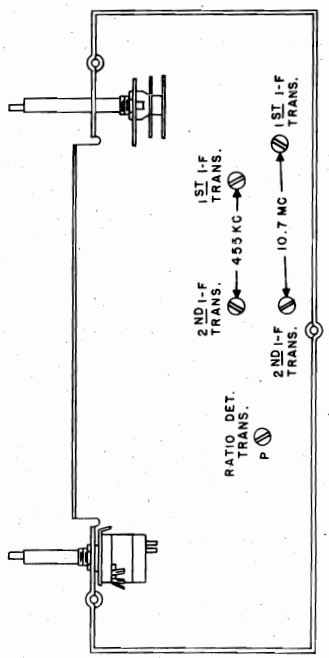

CHASSIS NO. V-2137-4

FIG. 2—BOTTOM VIEW

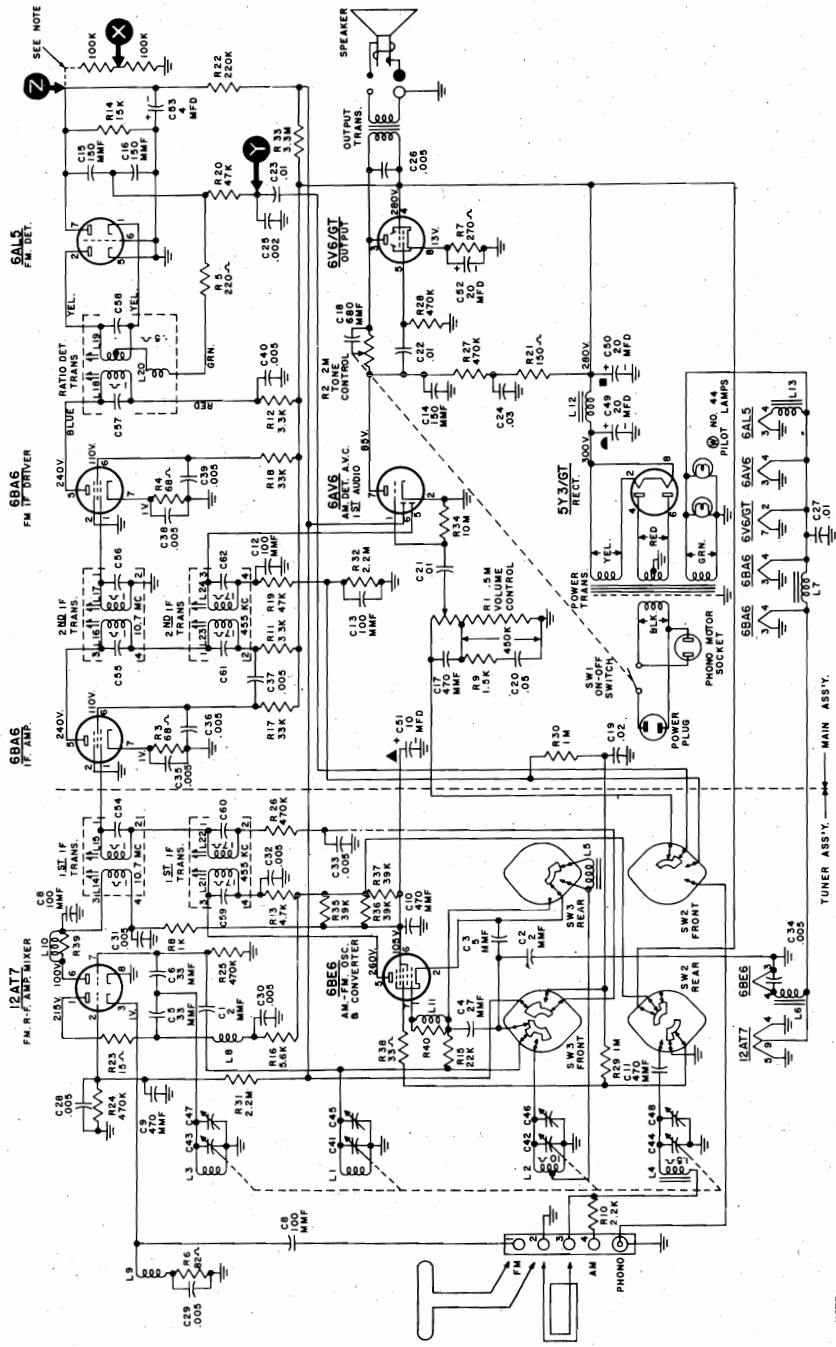

©John F. Rider

Compliments of www.nucow.com

MODELS H-305C8, H-306C8, Ch. V-2137-4

ALIGNMENT

BROADCAST BAND

Connect an output meter across the speaker voice coil.

While making the following adjustments, keep the volume control set for maximum output, the tone control set for maximum treble, and the signal generator output attenuated to avoid A.V.C. action.

Step	*Connect Signal Generator to—*	*Signal Generator Frequency*	*Radio Dial Setting*	*Adjust*
1	Set the band switch to AM.			
2	Stator of tuning capacitor (C44) through a 0.1 mfd capacitor	455 kc.	maximum capacity	455 kc. pri. and sec. of 1st and 2nd I-F trans. for max. output
NOTE: If the I-F transformers are badly mis-aligned, it may be impossible to obtain sufficient output using the above system. In this event, it will be necessary to align each transformer separately. Start with the last I-F transformer and work forward, connecting the signal generator to the control grid of the tube preceding the transformer under alignment.				
3	Radiated signal (no actual connection)	1600 kc.	1600 kc.	AM osc. trimmer (C46) for max. output
4	Radiated signal (no actual connection)	1400 kc.	tune to signal	AM ant. trimmer (C48) for max. output (rock-in adjustment)

FM BAND

Do not align the FM circuits until all AM adjustments have been completed.

Step	*Connect Signal Generator to—*	*Signal Generator Frequency*	*Radio Dial Setting*	*Adjust*
1	Set the band switch to FM.			
2	Connect two 100,000 ohm resistors (the resistances must be equal within 5 percent) between pin No. 7 of the 6AL5 tube and ground as shown on the schematic diagram.			
3	Connect a V. T. V. M. between points "X" and "Y" (see schematic diagram).			
4	Stator of FM ant. section (C43) on tuning capacitor through a .01 mfd mica capacitor	10.7 mc.	maximum capacity	Sec. of ratio det. trans. for *zero* (use medium strength signal)
5	Connect the V. T. V. M between point "Z" and ground.			
6	Same as step 4	10.7 mc.	maximum capacity	Pri. of ratio det. trans. and pri. and sec. of 10.7 mc. 1st and 2nd I-F trans. for max.
NOTE: The pri. of the ratio det. trans. peaks in two places. Use the peak with the slug farthest out.				
7	Reconnect the V. T. V. M. between points "X" and "Y", and increase the signal strength 10 times.			
8	Same as step 4	10.7 mc.	maximum capacity	Recheck sec. of ratio det. trans. for *zero* voltage
9	Reconnect the V. T. V. M. between point "Z" and ground.			
10	Same as step 4	10.7 mc.	maximum capacity	Pri. of ratio det. trans. for maximum voltage
11	Remove the two 100,000 ohm resistors that were inserted in step 2.			
12	FM ant. terminal through a 300 ohm non-inductive resistor	105 mc.	105 mc.	FM osc. trimmer (C45) for maximum output
13	Same as step 12	105 mc.	105 mc.	FM ant. trimmer (C47) for maximum output

PARTS LIST FOR MODELS H-305C8 AND H-306C8

When ordering parts, specify model number of set in addition to part number and description of part.

CABINET AND MISCELLANEOUS PARTS

Part No.	*Description*
V-5986-4	Antenna assembly, AM loop
V-5982-2	Antenna assembly, FM dipole
V-6120	Background, dial
V-1196-1	Cabinet (Mahogany)
V-1196-2	Cabinet (Blonde)
V-4965-2	Cable, phono
V-5860-3	Cable, assembly, speaker
V-5426	Clip, I-F mounting
V-9075-1	Clip, spring (Mahogany)
V-9075-2	Clip, spring (Blonde)
V-4349-1	Cord, A-C power
V-4966-2	Cord, A-C (record changer)
V-3219S-1	Cord, dial drive
V-9426-2	Cover, back (Mahogany)
V-9426-3	Cover, back (Blonde)
V-9433	Dial
V-8283	Doors, matched pair—completely finished less hardware (Mahogany)
V-8285	Doors, matched pair—completely finished less hardware (Blonde)
V-8284	Drawer, record changer—completely finished less hardware (Mahogany)

©John F. Rider

Compliments of www.nucow.com

MODELS H-305C8, H-306C8, Ch. V-2137-4

PARTS LIST FOR MODELS H-305C8 AND H-306C8 (Continued)

Part No.	Description
V-8286	Drawer, record changer—completely finished less hardware (Blonde)
V-9428-1	Escutcheon
V-4643	Eyelet, chassis mounting
V-4902	Glide, furniture
V-9425-1	Grille assembly, panel (Mahogany)
V-9425-2	Grille assembly, panel (Blonde)
V-4852	Grommet, chassis mounting
V-4644	Grommet, chassis shock
V-9091-1	Hinge, L. H. (Mahogany)
V-9091-2	Hinge, R. H. (Mahogany)
V-9091-3	Hinge, L. H. (Blonde)
V-9091-4	Hinge, R. H. (Blonde)
V-6146-1	Knob, on-off-tone
V-6146-2	Knob, band
V-5301-3	Knob, door (Mahogany)
V-5301-2	Knob, door (Blonde)
V-9104-1	Knob, volume (rear)
V-9104-2	Knob, tuning (rear)
V-9252-1	Nameplate, Westinghouse
V-9429-2	Plate, front glass
V-9442	Pointer, dial
V-3166	Pulley
V-6127	Sleeve, dial drive
V-3353-11	Slide mechanism, left hand
V-3353-12	Slide mechanism, right hand
V-6072-1	Socket, miniature wafer (12AT7)
V-6163-1	Socket, miniature wafer (6BE6)
V-4195	Socket, molded octal (6V6GT, 5Y3GT)
V-5405	Socket, molded (Phono A-C)
V-5673	Socket, miniature wafer (unshielded) (6AV6)
V-6295-1	Socket, miniature wafer (6BA6, 6AL5)
V-9434-2	Socket, pilot lamp
V-9431	Speaker, 12" PM
V-3248	Spring, dial
V-9076-1	Strike, ball head (Mahogany)
V-9076-2	Strike, ball head (Blonde)
V-6136	Terminal board, phono, ant., gnd.

V-2137-4 CHASSIS ELECTRICAL PARTS

R2CC30CK020D	Capacitor, 2 mmf (C1)
R2CC30UK020D	Capacitor, 2 mmf (C2)
R2CC30CK050D	Capacitor, 5 mmf (C3)
R3CC30CK270K	Capacitor, 27 mmf (C4)
R3CC26CK330M	Capacitor, 33 mmf (C5, C6)
R3CC30SL101M	Capacitor, 100 mmf (C7)
R3CC30SL101J	Capacitor, 100 mmf (C8)
R5CC21ZY471M	Capacitor, 470 mmf (C9, C10, C11)
RCM20A101M	Capacitor, 100 mmf (C12, C13)
RCM20A151M	Capacitor, 150 mmf (C14)
RCM20A151J	Capacitor, 150 mmf (C15, C16)
RCM20A471M	Capacitor, 470 mmf (C17)
RCM20A681M	Capacitor, 680 mmf (C18)
RCP10W2203A	Capacitor, .02 mfd. 200 v. (C19)
RCP10W2503A	Capacitor, .05 mfd. 200 v. (C20)
RCP10W4103A	Capacitor, .01 mfd. 400 v. (C21, C22, C23)
RCP10W4303A	Capacitor, .03 mfd. 400 v. (C24)
RCP10W6202A	Capacitor, .002 mfd. 600 v. C25)
RCP10M6502A	Capacitor, .005 mfd. 600 v. (C26)
V-5040-13	Capacitor, .01 mfd. 200 v. molded paper (C27)
V-5596	Capacitor, .005 min. mfd. (C28 to C40 incl.)
V-6137	Capacitor, variable (C41 to C48 incl.)
V-6121	Capacitor, electrolytic, 20 mfd. 400 v. (C49), 20 mfd. 400 v. (C50), 10 mfd. 350 v. (C51), 20 mfd. 25 v. (C52)
V-6638	Capacitor, electrolytic, 4 mfd. 150 v. (C53)
V-6157	Coil, ant. loading (L4)
V-6164	Coil, AM oscillator (L2)
V-6138	Coil, FM oscillator (L1)
V-6139	Coil, FM antenna (L3)
V-6122	Control, vol.-tone-off-on (R1, R2, SW1)
No. 44	Lamp, pilot
RC10AE680K	Resistor, 68 ohms ¼ w. (R3, R4)
RC10AE221M	Resistor, 220 ohms ¼ w. (R5)
RC10AE820K	Resistor, 82 ohms ¼ w. (R6)
RC30AE271K	Resistor, 270 ohms 1 w. (R7)
RC10AE102K	Resistor, 1000 ohms ¼ w. (R8)
RC10AE152M	Resistor, 1500 ohms ¼ w. (R9)
RC10AE222K	Resistor, 2200 ohms ¼ w. (R10)
RC30AE332K	Resistor, 3300 ohms 1 w. (R11) R12)
RC10AE472K	Resistor, 4700 ohms ¼ w. (R13)
RC10AE153K	Resistor, 15,000 ohms ¼ w. (R14)
RC10AE223K	Resistor, 22,000 ohms ¼ w. (R15)
RC30AE562K	Resistor, 5600 ohms 1 w. (R16)
RC30AE333K	Resistor, 33,000 ohms 1 w. (R17, R18)
RC10AE473M	Resistor, 47,000 ohms ¼ w. (R19, R20)
RC10AE154M	Resistor, 150 ohms ¼ w. (R21)
RC10AE224M	Resistor, 220,000 ohms ¼ w. (R22)
RC10AE150M	Resistor, 15 ohms ¼ w. (R23)
RC10AE474M	Resistor, 470,000 ohms ¼ w. (R24, R25, R26, R27, R28)
RC10AE105M	Resistor, 1.0 megohms ¼ w. (R29, R30)
RC10AE225M	Resistor, 2.2 megohms ¼ w. (R31, R32)
RC10AE335M	Resistor, 3.3 megohms ¼ w. (R33)
RC10AE106M	Resistor, 10.0 megohms ¼ w. (R34)
RC30AE393K	Resistor, 39,000 ohms 1 w. (R35, R36, R37)
RC10AE330K	Resistor, 33 ohms ¼ w. (R38)
V-4886-2	Reactor, R-F 1.1 microhenries (L5, L6, L7)
V-4886-4	Reactor, R-F (L8)
V-4886-10	Reactor, R-F (L9)
V-4886-6	Reactor, R-F (L10, R39)
V-4886-7	Reactor, R-F (L11, R40)
V-6161	Reactor, filter choke (L12)
V-4886-1	Reactor, R-F 14 microhenries (L13)
V-6538	Switch, selector (SW2, SW3)
V-6131	Transformer, power
V-5798	Transformer, audio output
V-6142	Transformer, FM 1st I-F (L14, L15, C54)
V-6129	Transformer, FM 2nd I-F (L16, L17, C55, C56)
V-6128	Transformer, ratio detector L18, L19, L20, C57, C58)
V-6130	Transformer, AM 1st and 2nd I-F (L21, L22, C59, C60, L23, L24, C61, C62)

©John F. Rider

Compliments of www.nucow.com

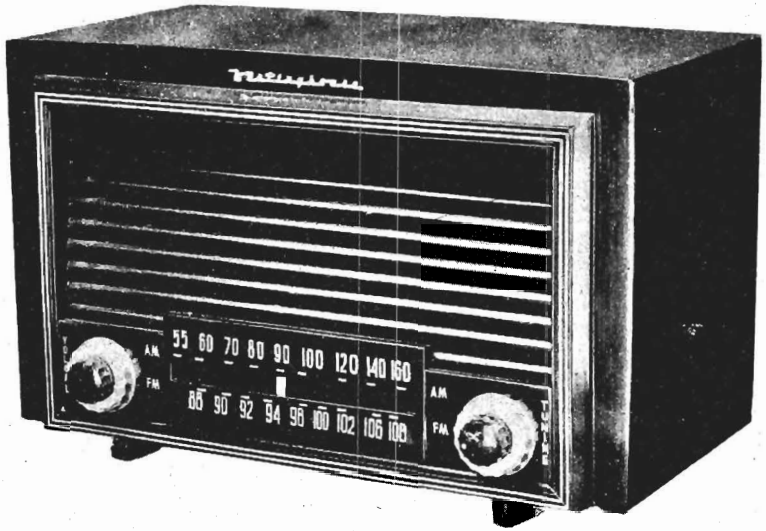

MODELS H-307T7 AND H-308T7

(BROWN) (IVORY)

SERVICE NOTES

SPECIFICATIONS

FREQUENCY RANGES:
- Amplitude Modulation .....540 to 1615 kc.
- Frequency Modulation .....88 to 108 mc.

INTERMEDIATE FREQUENCIES:
- Amplitude Modulation .....455 kc.
- Frequency Modulation .....10.7 mc.

TUBE COMPLEMENT:
- 1 12AT7 .....R-F Amp. and Mixer (FM)
- 1 12BE6 .....FM Osc. and AM Converter
- 1 12BA6 .....I-F Amp.
- 1 6BJ6 .....I-F Driver (FM)
- 1 12AL5 .....Ratio Det. (FM)
- 1 12AV6 ....Det. and AVC (AM) and A-F Amp.
- 1 50C5 .....Output Amp.

POWER OUTPUT:
- Undistorted .....1.0 watts
- Maximum .....1.9 watts

LOUDSPEAKER: .....5¼" PM

OPERATING VOLTAGE:.....117 volts, DC or 60 cycles AC

POWER CONSUMPTION: .....35 watts

WARNING

The chassis of this receiver is connected directly to one side of the power line. When making repairs or adjustments, it is recommended that the chassis be isolated from the line by means of an isolation transformer. Otherwise, *serious shock may result* if the radio chassis and ground are contacted at the same time.

ANTENNA INFORMATION

An external AM antenna can be coupled to the set by taping the lead-in wire to the outside of the rear cover as shown in Fig. 3. The wire should be dressed in the position shown and can be held in place with adhesive tape or other similar material.

The blue wire emerging from the hole in the rear cover is a "line" antenna for FM reception. It should be connected to the left antenna terminal as shown in Fig. 3. If an external FM antenna is to be used, disconnect the blue wire and connect the transmission line to the two terminals.

©John F. Rider
Compliments of www.nucow.com

MODELS H-307T7, H-308T7, Ch. V-2136

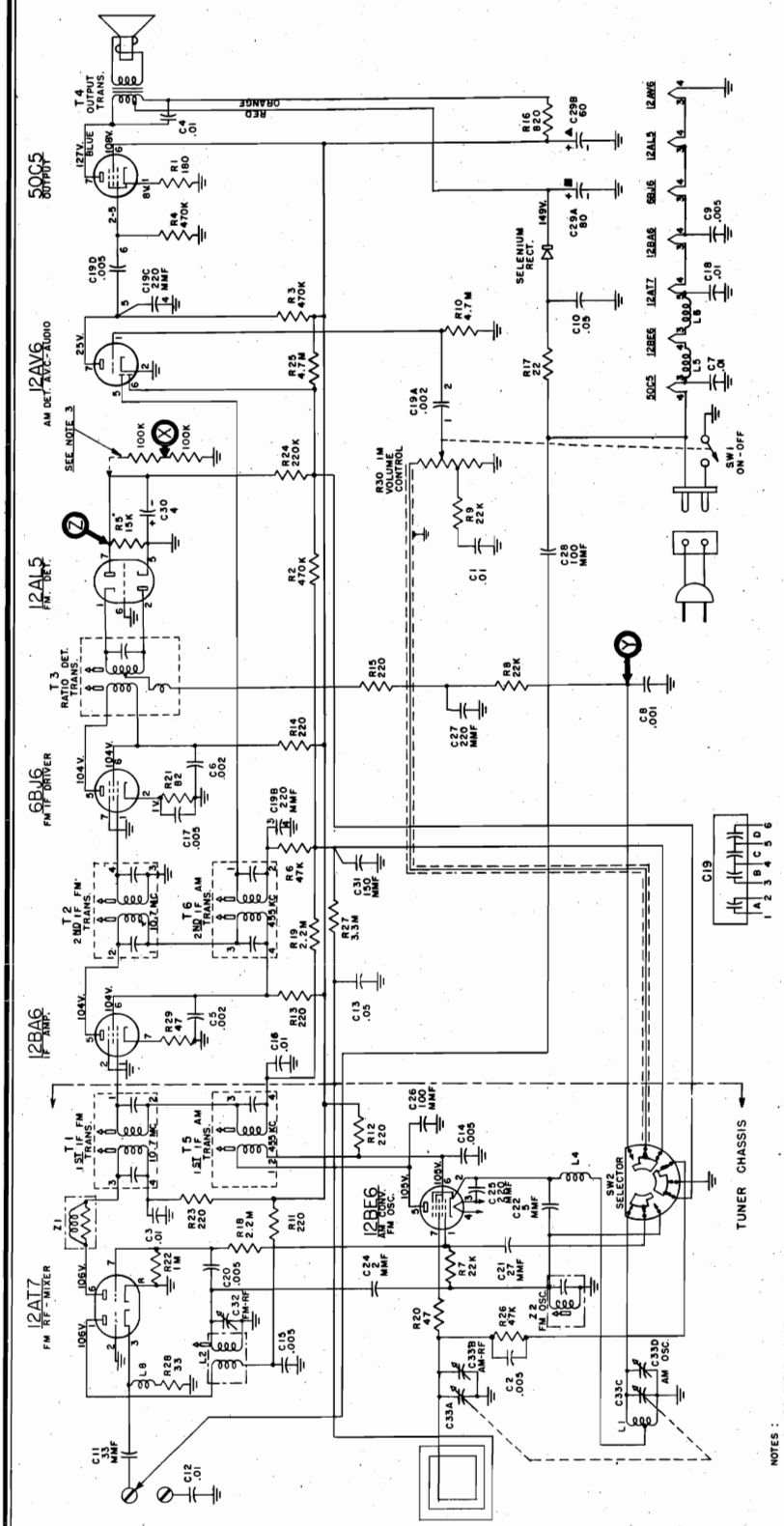

NOTES:
1. SELECTOR SWITCH SW2 IS SHOWN IN EXTREME CLOCKWISE POSITION OR AM BAND.
2. EXTREME COUNTER CLOCKWISE POSITION IS FM BAND.
3. ALL VOLTAGES MEASURED FROM CHASSIS (GROUND) USING A 20,000 OHM/VOLT METER. LINE VOLTAGE SET AT 117V.A.C. VOLTAGES SHOULD BE AS SHOWN ± 20 PER CENT.
4. TO BE INSTALLED FOR ALIGNMENT ONLY.

FIG. 1—SCHEMATIC DIAGRAM OF V-2136 CHASSIS

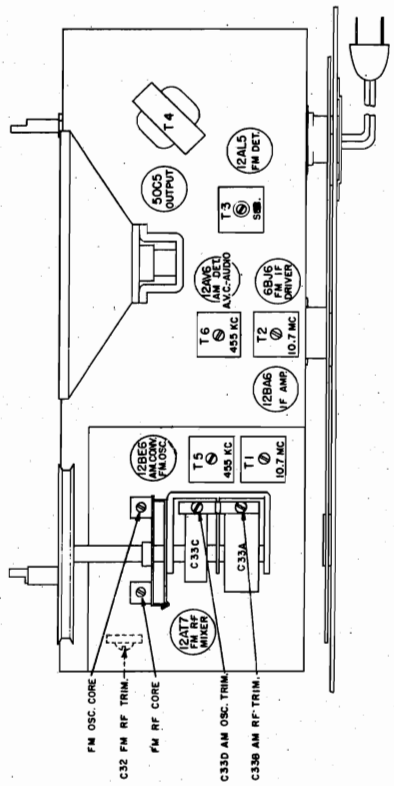

FIG. 2—TOP VIEW OF CHASSIS

©John F. Rider

Compliments of www.nucow.com

MODELS H-307T7, H-308T7, Ch. V-2136

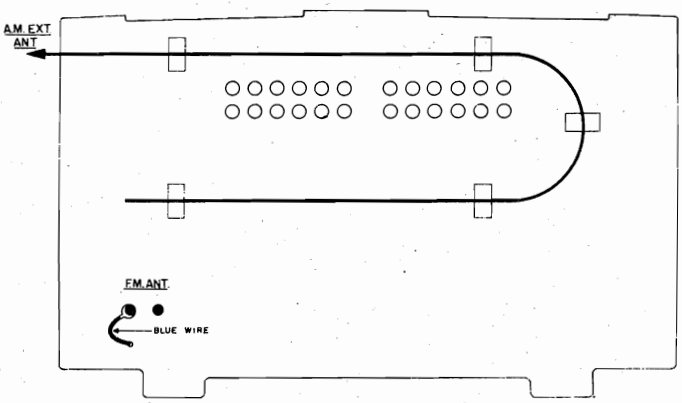

FIG. 3—ANTENNA COUPLING METHOD

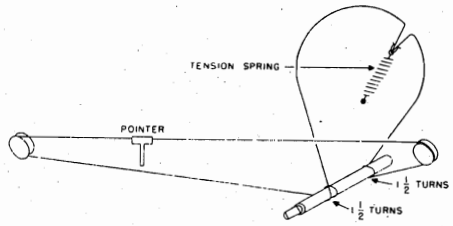

FIG. 4—DIAL DRIVE

ALIGNMENT

BROADCAST BAND

Connect an output meter across the speaker voice coil.

While making the following adjustments, keep the volume control set for maximum output and the signal generator output attenuated to avoid AVC action.

Check the dial pointer position by meshing the tuning capacitor plates completely and seeing that the dial pointer is set on the end mark of the dial scale.

Step	*Connect Signal Generator to—*	*Signal Generator Frequency*	*Radio Dial Setting*	*Adjust*
1	Set the band switch to AM			
2	Stator of tuning capacitor (C33A) through a 0.1 mfd capacitor	455 kc.	minimum capacity	Pri. and sec. of T6 and T5 for max. output in order given

NOTE: If the I-F transformers are badly mis-aligned, it may be impossible to obtain sufficient output using the above system. In this event, it will be necessary to align each transformer separately. Start with the last I-F transformer and work forward, connecting the signal generator to the control grid of the tube preceding the transformer under alignment.

3	Radiated signal (no actual connection)	1615 kc.	minimum capacity	AM osc. trimmer (C33D) for max. output
4	Radiated signal (no actual connection)	1400 kc.	tune to signal	AM R-F. trimmer (C33B) for max. output (rock-in adjustment)

FM BAND

Do not align the FM circuits until all AM adjustments have been completed.

Step	*Connect Signal Generator to—*	*Signal Generator Frequency*	*Radio Dial Setting*	*Adjust*
1	Set the band switch to FM.			
2	Connect two 100,000 ohm resistors (the resistances must be equal within 5 per cent) between pin No. 7 of the 12AL5 tube and ground as shown on the schematic diagram.			
3	Connect a V.T.V.M. between points "X" and "Y" (see schematic diagram).			
4	Pin No. 7 of 12AT7 through a .01 mfd mica capacitor	10.7 mc.	minimum capacity	Sec. of T3 for *zero* (use medium strength signal)
5	Connect the V.T.V.M. between point "Z" and ground.			
6	Same as step 4	10.7 mc.	minimum capacity	Pri. of T3 and pri. and sec. of T1 and T2 for max.
7	Reconnect the V.T.V.M. between points "X" and "Y" and increase the signal strength 10 times.			
8	Same as step 4	10.7 mc.	minimum capacity	Recheck sec. of T3 for *zero* voltage
9	Reconnect the V.T.V.M. between point "Z" and ground.			
10	Same as step 4	10.7 mc.	minimum capacity	Pri. of T3 for maximum voltage
11	Remove the two 100,000 ohm resistors that were inserted in step 2.			
12	FM ant. terminal through a 300 ohm non-inductive resistor	98 mc.	98 mc.	FM osc. core for maximum voltage
13	Same as step 12	98 mc.	98 mc.	FM R-F trimmer (C32) for maximum voltage
14	Same as step 12	105 mc.	tune to signal	FM R-F core for maximum voltage
15	Same as step 12	90 mc.	tune to signal	FM R-F trimmer (C32) for maximum voltage (rock-in)
16	Recheck steps 14 and 15 for tracking.			

©John F. Rider

Compliments of www.nucow.com

MODELS H-307T7, H-308T7, Ch. V-2136

PARTS LIST FOR MODELS H-307T7 AND H-308T7

When ordering parts, specify model number of set in addition to part number and description of part.

CABINET AND MISCELLANEOUS

Part No.	Description
V-6120-1	Background, dial
V-1199-2	Cabinet (brown)
V-1199-3	Cabinet (ivory)
V-5426	Clip, I-F mounting
V-3219S-1	Cord, dial drive
V-9636-1	Cover assembly, back
V-9651-1	Cover, back
V-9637-1	Foot, mounting
V-6146-11	Knob, off-on, volume, front (ivory)
V-6146-5	Knob, off-on, volume, front (brown)
V-6146-10	Knob, band (ivory)
V-6146-2	Knob, band (brown)
V-9104-3	Knob, off-on, volume (rear)
V-9104-2	Knob, tuning (rear)
V-9653	Loop, antenna
V-9506-1	Nameplate, Westinghouse
V-9661	Plug, power (for interlock)
V-9639-1	Pointer
V-9678-2	Pulley, gang
V-3166S	Pulley, dial cord
V-9655	Shell, interlock
V-9654	Socket, interlock
V-9641	Speaker, 5¼ PM
V-3248S	Spring, dial drive
V-5421-5	Washer, felt (knobs)
V-4292-1	Socket, miniature molded (50C5)
V-6878-2	Socket, miniature wafer (12BA6, 6BJ6, 12AL5, 12AV6)
V-5556-2	Socket, miniature (12AT7)
V-4292S-2	Socket, miniature molded (12BE6)

V-2136 CHASSIS

Ref. No.	Part No.	Description
C1	RCP10W2103M	Capacitor, .01 mfd 200 v.
C2	V-5596	Capacitor, .005 mfd
C3	RCP10W4103M	Capacitor, .01 mfd 400 v.
C4	RCP10W4103M	Capacitor, .01 mfd 400 v.
C5	RCP10W6202M	Capacitor, .002 mfd 600 v.
C6	RCP10W6202M	Capacitor, .002 mfd 600 v.
C7	RCP10W2103M	Capacitor, .01 mfd 200 v.
C8	RCP10W6102M	Capacitor, .001 mfd 600 v.
C9	V-5596	Capacitor, .005 mfd
C10	V-6023-4503M	Capacitor, .05 mfd 400 v.
C11	R3CC30SL330K	Capacitor, 33 mmf
C12	RCP10W2103M	Capacitor, .01 mfd 200 v.
C13	RCP10W2503M	Capacitor, .05 mfd 200 v.
C14	V-5596	Capacitor, .005 mfd
C15	V-5596	Capacitor, .005 mfd
C16	RCP10W2103M	Capacitor, .01 mfd 200 v.
C17	V-5596	Capacitor, .005 mfd
C18	RCP10W2103M	Capacitor, .01 mfd 200 v.
C19	V-9634-1	Capacitor, multiple ceramic .002 mfd, 220 mmf, 220 mmf, .005 mfd.
C20	V-5596	Capacitor, .005 mfd
C21	R2CC30UK270K	Capacitor, 27 mmf
C22	R2CC30UK050D	Capacitor, 5 mmf
C24	R2CC30CK020D	Capacitor, 2 mmf
C25	R5CC20ZY221M	Capacitor, 220 mmf
C26	RCM20D101J	Capacitor, 100 mfd
C27	RCM20A221M	Capacitor, 220 mmf
C28	RCM20A101M	Capacitor, 100 mfd
C29	V-9635	Capacitor, electrolytic, 80 mfd 150 v., 60 mfd 150 v.
C30	V-4637	Capacitor, electrolytic, 4 mfd 50 v.
C31	RCM20A151M	Capacitor, 150 mmf
C32	V-9670	Capacitor, trimmer (F-M—R-F)
C33	V-9671	Capacitor, variable tuning (consists of A, B, C and D)
L1	V-9672	Coil, A-M osc.
L2	V-9674	Coil, F-M—R-F
	V-9676-1	Core, F-M—R-F and osc. tuning
L4	V-9099-1	Choke, 1.1 microhenries
L5	V-9099-1	Choke, 1.1 microhenries
L6	V-9099-1	Choke, 1.1 microhenries
L8	V-4886-10	Choke, antenna input
	V-9640	Rectifier, selenium
R1	RC30AE181K	Resistor, 180 ohms 1 w.
R2	RC20AE474M	Resistor, 470,000 ohms ½ w.
R3	RC20AE474M	Resistor, 470,000 ohms ½ w.
R4	RC20AE474M	Resistor, 470,000 ohms ½ w.
R5	RC20AE153K	Resistor, 15,000 ohms ½ w.
R6	RC20AE473M	Resistor, 47,000 ohms ½ w.
R7	RC20AE223M	Resistor, 22,000 ohms ½ w.
R8	RC20AE223M	Resistor, 22,000 ohms ½ w.
R9	RC20AE223M	Resistor, 22,000 ohms ½ w.
R10	RC20AE475M	Resistor, 4.7 megohms ½ w.
R11	RC20AE221M	Resistor, 220 ohms ½ w.
R12	RC20AE221M	Resistor, 220 ohms ½ w.
R13	RC20AE221M	Resistor, 220 ohms ½ w.
R14	RC20AE221M	Resistor, 220 ohms ½ w.
R15	RC20AE221M	Resistor, 220 ohms ½ w.
R16	V-6984-10	Resistor, 820 ohms 5 w.
R17	RC30AE220K	Resistor, 22 ohms 1 w.
R18	RC20AE225M	Resistor, 2.2 megohms ½ w.
R19	RC20AE225M	Resistor, 2.2 megohms ½ w.
R20	RC20AE470M	Resistor, 47 ohms ½ w.
R21	RC20AE820K	Resistor, 82 ohms ½ w.
R22	RC20AE105M	Resistor, 1 megohm ½ w.
R23	RC20AE221M	Resistor, 220 ohms ½ w.
R24	RC20AE224M	Resistor, 220,000 ohms ½ w.
R25	RC20AE475M	Resistor, 4.7 megohms ½ w.
R26	RC20AE473M	Resistor, 47,000 ohms ½ w.
R27	RC20AE335M	Resistor, 3.3 meg. ½ w.
R28	RC20AE330M	Resistor, 33 ohms ½ w.
R29	RC20AE470M	Resistor, 47 ohms ½ w.
*R30	V-9673-1 assy	Control, volume 1 megohm (assy consists of R30 and SW1)
*SW1	V-9673-1 assy	Switch, on-off (assy consists of R30 and SW1)
SW2	V-9681-1	Switch, selector
T1	V-9688	Transformer, 1st F-M—I-F
T2	V-9642	Transformer, 2nd F-M—I-F
T3	V-9048	Transformer, ratio detector
T4	V-9665	Transformer, output
T5	V-9649-1	Transformer, 1st A-M—I-F
T6	V-6130-1	Transformer, 2nd A-M—I-F
Z1	V-4886-6	Choke
Z2	V-9675	Coil and capacitor assy, F-M osc.
	V-9676-1	Core, F-M—R-F and osc. tuning

*Sold only as complete assembly.

©John F. Rider

Compliments of www.nucow.com

MODELS H-309P5, H-309P5U, Ch. V-2156

MODELS H-309P5 AND H-309P5U CHASSIS V-2156

SERVICE NOTES

SPECIFICATIONS

FREQUENCY RANGE .....540 to 1615 kc.
INTERMEDIATE FREQUENCY .....455 kc.
TUBE COMPLEMENT:
- 1 1U4 .....R-F Amplifier
- 1 1R5 .....Converter
- 1 1U4 .....1-F Amplifier
- 1 1U5 .....Det., AVC, and 1st A-F Amp.
- 1 3V4 .....Output Amplifier

POWER OUTPUT:
- Maximum .....0.38 watt
- Undistorted .....0.18 watt

LOUDSPEAKER .....5¼" PM
POWER SUPPLY:
- Battery Operation—"AB" Battery Pack (9 v. "A" and 90 v. "B")—Eveready 756W, Burgess T6Z60, or Ray-O-Vac AB601
- Line Operation .....105 to 120 volts, D-C or 50 to 60 cycles A-C

CURRENT CONSUMPTION (Battery Operation):
- "A" section of "AB" battery .....05 amp.
- "B" section of "AB" battery .....016 amp.

POWER CONSUMPTION (Line Operation)....15 watts

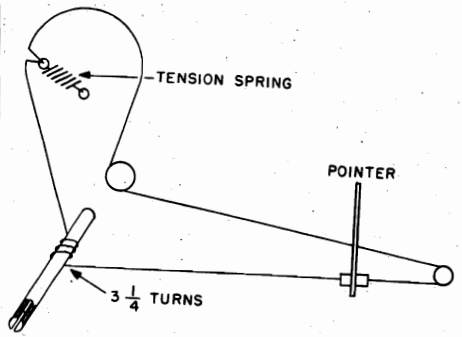

FIG. 2—DIAL DRIVE

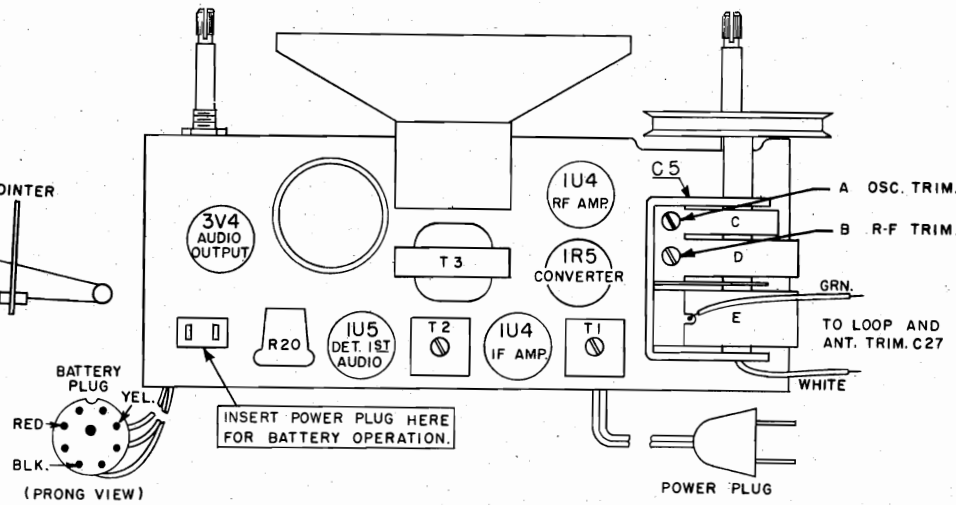

FIG. 3—CHASSIS LAYOUT

©John F. Rider

Compliments of www.nucow.com

MODELS H-309P5, H-309P5U, Ch. V-2156

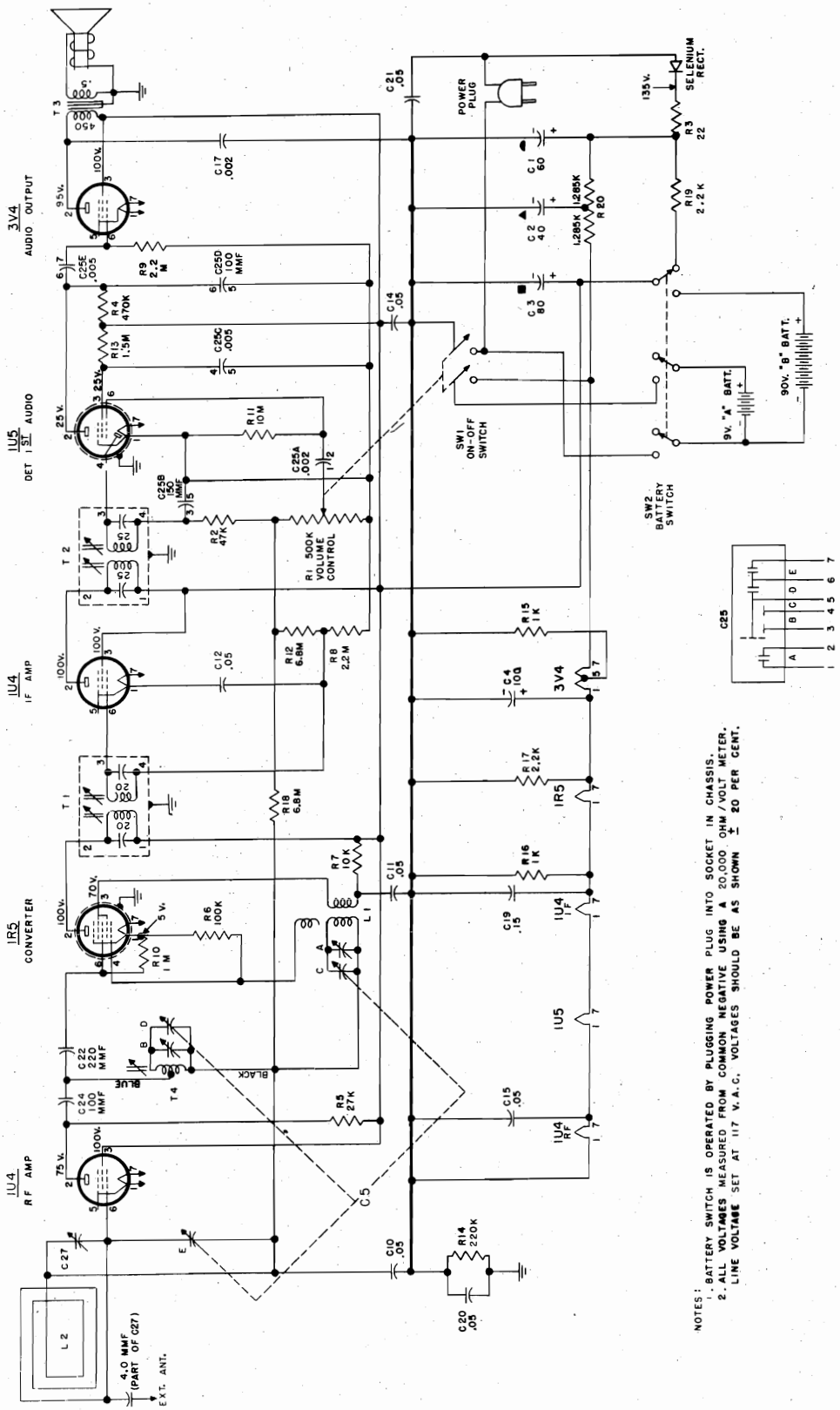

FIG. 1—SCHEMATIC DIAGRAM OF V-2156 CHASSIS

©John F. Rider

Compliments of www.nucow.com

ALIGNMENT

It is recommended that the chassis be isolated from the power line by means of an isolation transformer.

While making the following adjustments, keep the volume control set for maximum output and the signal generator output attenuated to avoid AVC action.

Step	Connect Signal Generator to—	Signal Generator Frequency	Radio Dial Setting	Adjust for Maximum Output—
1	Pin No. 6 of the 1R5 converter through a 200 mmf capacitor	455 kc.	Minimum capacity	Top and bottom slugs of T2 and T1 in order given *
2	Stator of antenna tuning section of gang (E) through a 200 mmf capacitor	1615 kc.	Minimum capacity	Osc. trimmer (A)
3	Same as step 2	1400 kc.	1400 kc.	R-F trimmer (B)
4	Same as step 2	600 kc.	600 kc.	Slug of R-F trans. (T4)**
5	Recheck steps 3 and 4			
6	Radiated signal	1400 kc.	1400 kc.	Antenna trimmer (C27)

* It is recommended that a fiber aligning tool that snugly fits the slot in the powdered iron core be used to prevent chipping of the slot.

**A 10/32" Allen wrench can be used to adjust the slug in T4.

PARTS LIST FOR MODELS H-309P5 AND H-309P5U

When ordering parts, specify model number of set in addition to part number and description of part.

CABINET AND MISCELLANEOUS

Part No.	Description
V-1204-1	Cabinet
V-6554-1	Cable assembly, battery
V-5426	Clip, I-F mounting
V-5684	Clip, tubular (back cover catch)
V-3219S-1	Cord, dial drive
V-4349-6	Cord, Power A-C
V-9699-1	Knob
V-9701	Loop, antenna
V-9697-1	Nameplate, Westinghouse
V-6568-2	Pointer
V-9704-2	Shaft, tuning
V-9706-1	Shield, miniature tube spring (1U5, 1R5)
V-4292S-1	Socket, miniature molded (3V4, 1U4, 1R5, 1U5)
V-9705	Speaker, 5" PM
V-4057	Spring, dial cord
V-5687	Spring, back cover hinge

V-2156 CHASSIS

Ref. No.	Part No.	Description
*C1	V-6552-2 assy	Capacitor, electrolytic 60 mfd 150 v. (assy consists of C1, C2, C3 and C4)
*C2	V-6552-2 assy	Capacitor, electrolytic 40 mfd 150 v. (assy consists of C1, C2, C3 and C4)
*C3	V-6552-2 assy	Capacitor, electrolytic 80 mfd 150 v. (assy consists of C1, C2, C3 and C4)
*C4	V-6552-2 assy	Capacitor, electrolytic 100 mfd 25 v. (assy consists of C1, C2, C3 and C4)
C5	V-6556	Capacitor, variable, tuning (consists of A, B, C, D and E)
C10	RCP10W2503M	Capacitor, .05 mfd
C11	RCP10W2503M	Capacitor, .05 mfd
C12	RCP10W2503M	Capacitor, .05 mfd
C14	RCP10W2503M	Capacitor, .05 mfd
C15	V-6066-2503M	Capacitor, .05 mfd 200 v.
C17	V-6066-4202M	Capacitor, .002 mfd 400 v.
C19	RCP10W2154M	Capacitor, .15 mfd 200 v.
C20	RCP10W2503M	Capacitor, .05 mfd
C21	RCP10W4503M	Capacitor, .05 mfd
C22	RCM20A221M	Capacitor, 220 mmf
C24	RCM20A101M	Capacitor, 100 mmf
C25	V-9703-1	Capacitor, multiple (consists of A, B, C and D)
*C27	V-9701 assy	Capacitor, variable (assy consists of C27 and L2)
L1	V-5661	Coil, osc.
*L2	V-9701 assy	Loop, ant. (assy consists of C27 and L2)
*R1	V-5666-5 assy	Control, volume 500,000 ohms (assy consists of R1 and SW1)
	V-6558-1	Rectifier, selenium
R2	RC20AE473M	Resistor, 47,000 ohms ½ w.
R3	RC30AE220M	Resistor, 22 ohms 1 w.
R4	RC20AE474M	Resistor, 470,000 ohms ½ w.
R5	RC20AE273M	Resistor, 27,000 ohms ½ w.
R6	RC20AE104M	Resistor, 100,000 ohms ½ w.
R7	RC20AE103M	Resistor, 10,000 ohms ½ w.
R8	RC20AE225M	Resistor, 2.2 megohms ½ w.
R9	RC20AE225M	Resistor, 2.2 megohms ½ w.
R10	RC20AE105M	Resistor, 1 megohm ½ w.
R11	RC20AE106M	Resistor, 10 megohms ½ w.
R12	RC20AE685M	Resistor, 6.8 megohms ½ w.
R13	RC20AE155M	Resistor, 1.5 megohms ½ w.
R14	RC20AE224M	Resistor, 220,000 ohms ½ w.
R15	RC20AE102K	Resistor, 1000 ohms ½ w.
R16	RC20AE102K	Resistor, 1000 ohms ½ w.
R17	RC20AE222K	Resistor, 2200 ohms ½ w.
R18	RC20AE685M	Resistor, 6.8 megohms ½ w.
R19	RC30AE222K	Resistor, 2200 ohms 1 w.
R20	V-9246-1	Resistor, ballast 2570 ohms
*SW1	V-5666-5 assy	Switch, on-off (assy consists of SW1 and R1)
SW2	V-6565	Switch, line-battery
T1	V-6972-5	Transformer, 1st I-F
T2	V-6972-6	Transformer, 2nd I-F
T3	V-6567	Transformer, audio
T4	V-6561	Transformer, RF

*Sold only as complete assembly.

©John F. Rider
Compliments of www.nucow.com

MODELS H-310T5, H-311T5, Ch. V-2161; H-310T5U, H-311T5U, Ch. V-2161U

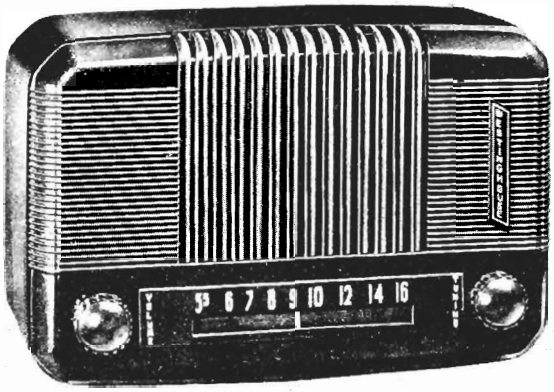

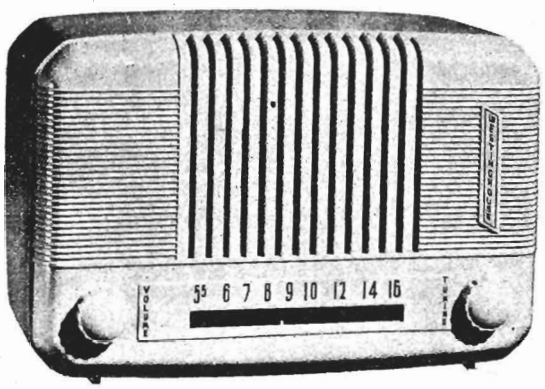

H-310T5
H-310T5U
(BROWN)

H-311T5
H-311T5U
(IVORY)

SERVICE NOTES

SPECIFICATIONS

FREQUENCY RANGE: ..... 540 to 1615 kc.

INTERMEDIATE FREQUENCY: ..... 455 kc.

TUBE COMPLEMENT:

1	12BE6	Converter
1	12BA6	I-F Amp.
1	12AV6	Det., AVC, and 1st A-F Amp.
1	50C5	Output Amp.
1	35W4	Rectifier

POWER OUTPUT:

Undistorted	0.9 watt
Maximum	1.5 watts

LOUDSPEAKER: ..... 4" P.M.

OPERATING VOLTAGE: ..... 105 to 120 volts, 50-60 cycles A-C or D-C

POWER CONSUMPTION: ..... 35 watts

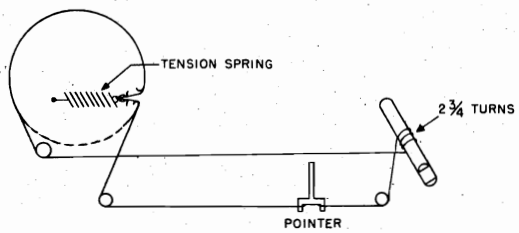

FIG. 1—DIAL DRIVE

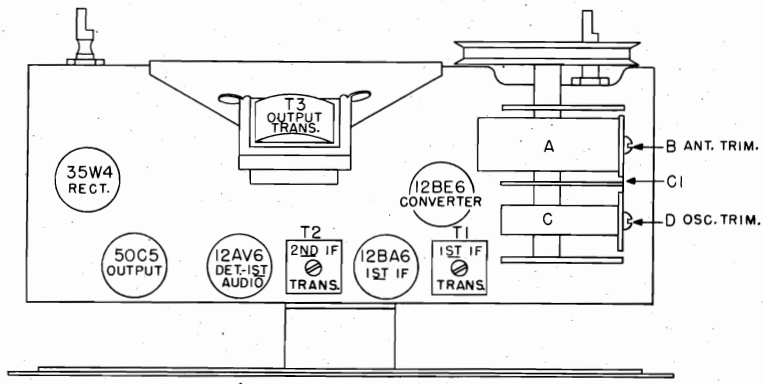

FIG. 2—CHASSIS LAYOUT

©John F. Rider

Compliments of www.nucow.com

MODELS H-310T5, H-311T5, Ch. V-2161; H-310T5U, H-311T5U, Ch. V-2161U

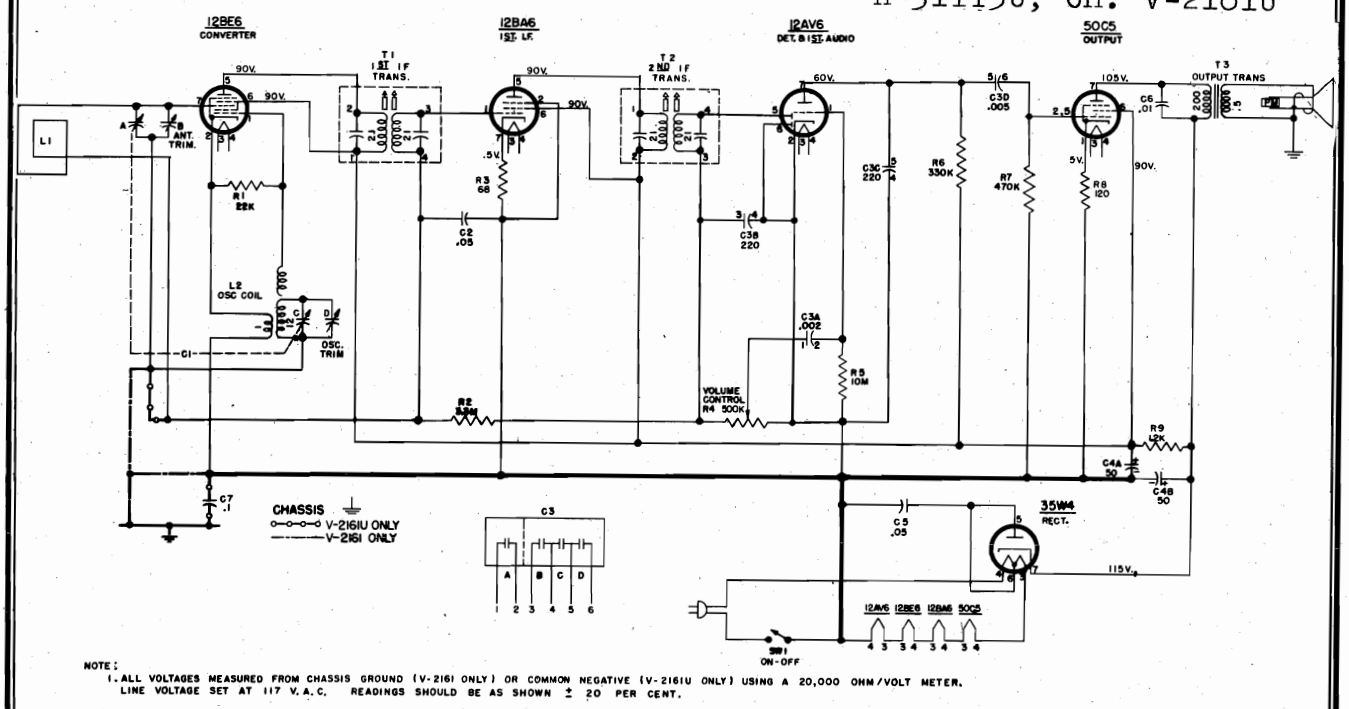

FIG. 3—SCHEMATIC DIAGRAM OF V-2161 AND V-2161U CHASSIS

WARNING: The V-2161 chassis is connected directly to one side of the power line. When making repairs or adjustments, it is recommended that the chassis be isolated from the line by means of an isolation transformer. Otherwise serious shock may result if the radio chassis and ground are contacted at the same time.

ALIGNMENT

It is recommended that the chassis be isolated from the power line by means of an isolation transformer.

Make certain that the dial pointer is correctly positioned. When the gang is completely closed, the pointer should be over the small bump near the left end of the dial background.

While making the following adjustments, keep the volume control set for maximum output and the signal generator output attenuated to avoid AVC action.

Step	Connect Signal Generator to —	Signal Generator Frequency	Radio Dial	Adjust for Maximum Output—
1	Stator of R-F tuning capacitor (A) through a 0.1 mfd capacitor	455 kc.	Minimum capacity	Top and bottom slugs in 2nd and 1st I-F trans. in order given *
2	Same as step 1	1615 kc.	Minimum capacity	Osc. trimmer (D)
3	Radiated Signal	1400 kc.	1400 kc.	Ant. trimmer (B)

* It is recommended that a fiber aligning tool that snugly fits the slot in the powdered iron core be used to prevent chipping of the slot.

©John F. Rider

Compliments of www.nucow.com

MODELS H-310T5, H-311T5,
Ch. V-2161; H-310T5U,
H-311T5U, Ch. V-2161U

PARTS LIST FOR MODELS H-310T5, H-311T5, H-310T5U, AND H-311T5U

When ordering parts, specify model number of set in addition to part number and description of part.

CABINET AND ACCESSORIES

Part No.	Description
V-9746-1	Baffle and grille cloth assembly (ivory)
V-1207-1	Cabinet (brown)
V-1207-2	Cabinet (ivory)
V-5426	Clip, I-F mounting
V-3219S-1	Cord, dial drive
V-6184-4	Knob (brown)
V-6184-5	Knob (ivory)
V-6190-3	Pointer, dial
V-6191-5	Shaft, tuning
V-9706-1	Shield, spring (12AV6)
V-4292S-1	Socket, miniature molded (12BE6, 12BA6, 12AV6, 50C5 and 35W4)
V-9727	Speaker, 4" PM
V-4057	Spring, dial drive

V-2161 AND V-2161U CHASSIS

Ref. No.	Part No.	Description
C1	V-6231	Capacitor, variable (consists of A, B, C and D)
C2	RCP10W2503M	Capacitor, .05 mfd 200 v.
C3	V-9634-1	Capacitor, multiple ceramic (consists of A, B, C and D)
C4	V-6230	Capacitor, electrolytic 50-50 mfd 150 v. (consists of A and B)
C5	RCP10W4503M	Capacitor, .05 mfd 400 v.
C6	RCP10W4103M	Capacitor, .01 mfd 400 v.
C7	RCP10W4104M	Capacitor, .1 mfd 400 v. (V-2161U only)
L1	V-9725	Loop, antenna
L2	V-9724	Coil, osc.
R1	RC20AE223M	Resistor, 22,000 ohms ½ w.
R2	RC20AE335M	Resistor, 3.3 meg. ½ w.
R3	RC20AE680M	Resistor, 68 ohms ½ w.
*R4	V-6198-5	Control, volume 500,000 ohms (assy consists of R4 and SW1)
R5	RC20AE106M	Resistor, 10 megs.
R6	RC20AE334M	Resistor, 330,000 ohms ½ w.
R7	RC20AE474M	Resistor, 470,000 ohms ½ w.
R8	RC20AE121M	Resistor, 120 ohms ½ w.
R9	RC30AE122M	Resistor, 1200 ohms 1 w.
*SW1	V-6198-5	Switch, on-off (assy consists of SW1 and R4)
T1	V-9735-1	Transformer, 1st I-F
T2	V-9735-1	Transformer, 2nd I-F

* Sold only as complete assembly.

©John F. Rider

Compliments of www.nucow.com

MODELS H-312P4, H-312P4U, H-313P4,U
H-314P4, H-314P4U, H-315P4, H-315P4U,
Ch. V-2153-1

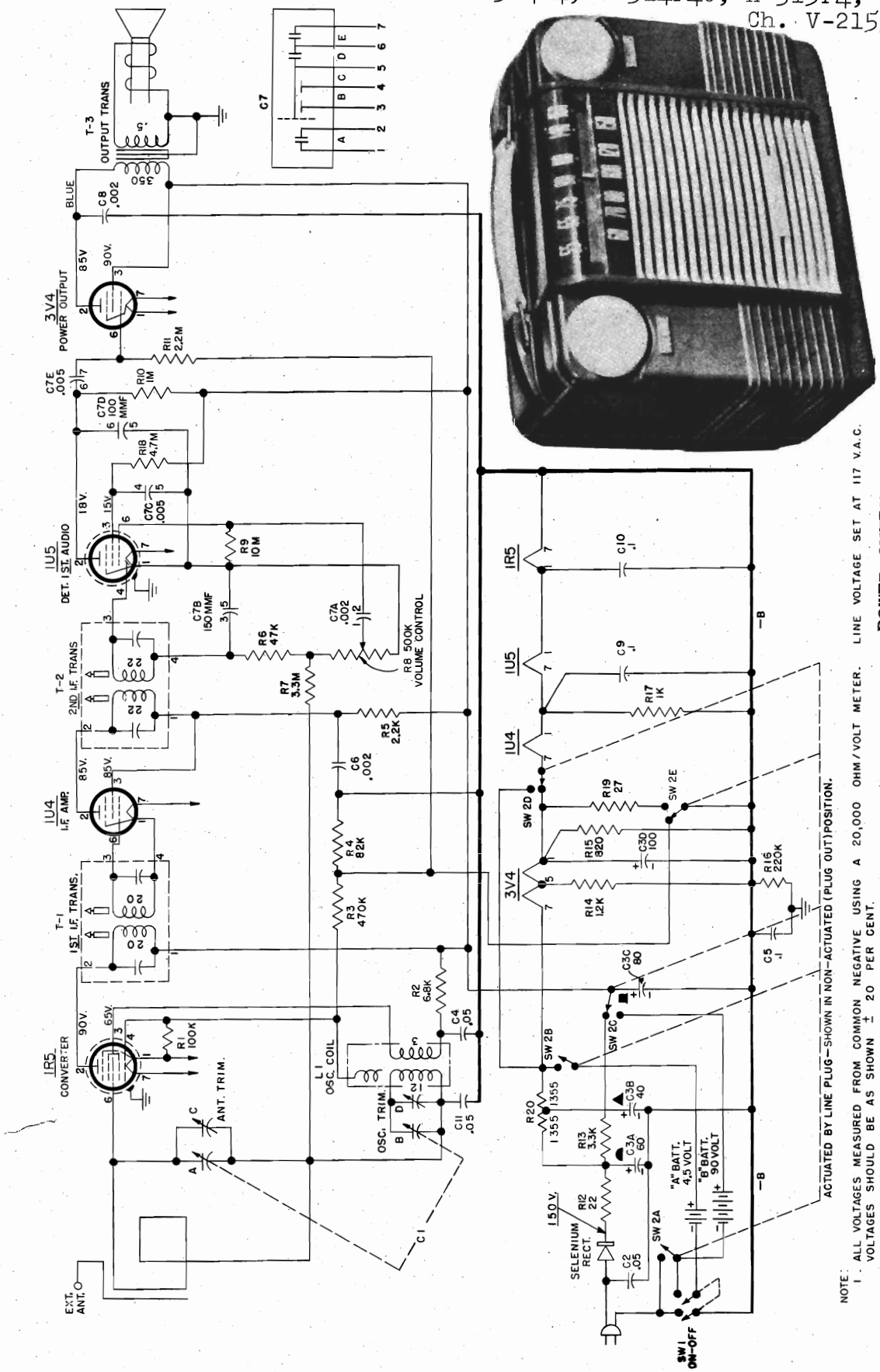

NOTE:
1. ALL VOLTAGES MEASURED FROM COMMON NEGATIVE USING A 20,000 OHM/VOLT METER. VOLTAGES SHOULD BE AS SHOWN ± 20 PER CENT.
2. ALL CAPACITOR VALUES ARE SHOWN IN MFD. UNLESS OTHERWISE SPECIFIED. ALL RESISTOR VALUES ARE SHOWN IN OHMS UNLESS OTHERWISE SPECIFIED.

POWER OUTPUT:
Maximum ..... 0.23 watt
Undistorted ..... 0.12 watt

LOUDSPEAKER: ..... 4" P.M.

FREQUENCY RANGE: ..... 540 to 1615 kc.
POWER CONSUMPTION (Line Operation): ..... 15 watts
INTERMEDIATE FREQUENCY ..... 455 kc.

©John F. Rider

Compliments of www.nucow.com

CHASSIS V-2153-1

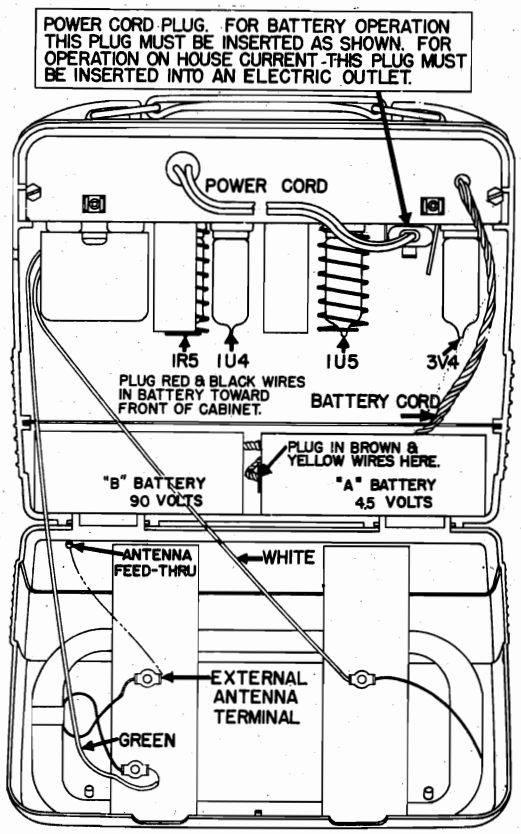

FIG. 2 — REAR VIEW WITH COVER OPEN

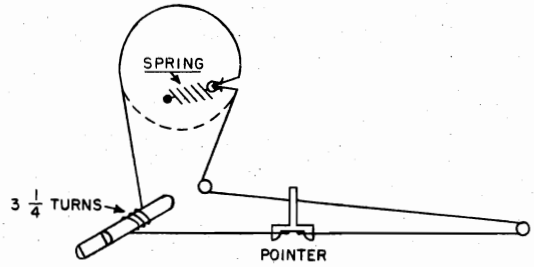

FIG. 3 — DIAL DRIVE

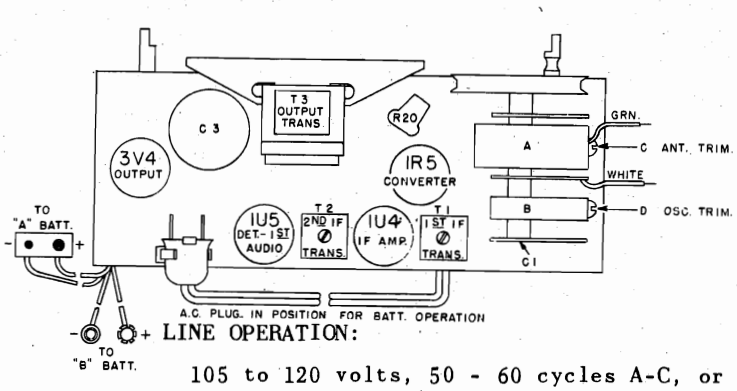

LINE OPERATION:

105 to 120 volts, 50 - 60 cycles A-C, or D-C

CURRENT CONSUMPTION (Battery Operation):

"A" Battery ..... 0.1 amp.
"B" Battery ..... 0.014 amp.

BATTERY PLACEMENT NOTE: The batteries should be inserted in the relative position shown in Fig. 2 with the connector end of the "B" battery facing the front of the receiver the connector end of the "A" battery facing the side of the "B" battery.

BATTERY OPERATION:

1 "A" Battery (4.5 v.) — Eveready 736, Ray-O-Vac P93A, or Burgess F3
1 "B" Battery (90 v.) — Eveready 490, Ray-O-Vac 4390, or Burgess N60

ALIGNMENT

It is recommended that the chassis be isolated from the power line by means of an isolation transformer.

While making the following adjustments, keep the volume control set for maximum output and the signal generator output attenuated to avoid AVC action.

Step	Connect Signal Generator to —	Signal Generator Frequency	Radio Dial	Adjust for Maximum Output
1.	Stator of R-F tuning capacitor (A) through a 0.1 mfd	455 kc.	minimum capacity	Top and bottom slugs in 2nd and 1st I-F trans. in order given*
2.	Same as step 1	1615 kc.	minimum capacity	Osc. trimmer (D)
3.	Radiated Signal	1400 kc.	1400 kc.	Ant. trimmer (C)

**It is recommended that a fiber aligning tool that snugly fits the slot in the powered iron core be used to prevent chipping of the slot.*

©John F. Rider

Compliments of www.nucow.com

MODELS H-312P4, H-312P4U, H-313P4, H-314P4, H-314P4U, H-315P4, H-315P4U, Ch. V-2153-1

CABINET AND MISCELLANEOUS

Pari No.	Description
V-5675-2	Baffle and grille cloth assembly
V-5652	Background, dial
V-1157-8	Cabinet (brown and ivory)
V-1157-9	Cabinet (ivory and brown)
V-9415-2	Cable assembly, battery
V-5426	Clip, I-F mounting
V-5684	Clip, tubular (back cover catch)
V-4349-8	Cord, A-C
V-4304-16	Cord, dial drive
V-9751-1	Handle (brown)
V-9751-2	Handle (ivory)
V-5698-3	Knob (brown)
V-5698-4	Knob (ivory)
V-9405-2	Loop, antenna
V-5650	Pointer, dial
V-6191-1	Shaft, tuning
V-9753-1	Shelf, battery retainer
V-9706	Shield, spring (1R5, 1U5)
V-4292S-1	Socket, miniature molded (1U5, 1R5, 1U4, and 3V4)
V-9419	Speaker, 4" P.M.
V-5687	Spring, back cover hinge
V-4057	Spring, dial drive
V-4651	Stud, baffle and grille cloth mounting

V-2153-1 CHASSIS

Ref. No.	Part No.	Description
C1	V-5651	Capacitor, variable (consists of A, B, C and D)
C2	RCP10W4503M	Capacitor, .05 mfd 400 v.
C3	V-6552-2	Capacitor, electrolytic (consists of A, B, C and D)
C4	RCP10W2503M	Capacitor, .05 mfd 200 v.
C5	RCP10W2104M	Capacitor, .1 mfd 200 v.
C6	RCP10W4202M	Capacitor, .002 mfd 400 v.
C7	V-9703-1	Capacitor, multiple (consists of A, B, C and D)
C8	RCP10W4202M	Capacitor, .002 mfd 400 v.
C9	RCP10W2104M	Capacitor, .1 mfd 200 v.
C10	RCP10W2104M	Capacitor, .1 mfd 200 v.
C11	RCP10W2503M	Capacitor, .05 mfd 200 v.
L1	V-5661	Coil, osc.
	V-9446-1	Rectifier, selenium
R1	RC20AE104M	Resistor, 100,000 ohms ½ w.
R2	RC20AE682M	Resistor, 6800 ohms ½ w.
R3	RC20AE474M	Resistor, 470,000 ohms ½ w.
R4	RC20AE823K	Resistor, 82,000 ohms ½ w.
R5	RC20AE222M	Resistor, 2200 ohms ½ w.
R6	RC20AE473M	Resistor, 47,000 ohms ½ w.
R7	RC20AE335M	Resistor, 3.3 megohms ½ w.
R8	V-6198-6	Control, volume 500,000 ohms (consists of R8 and SW1)
R9	RC20AE106M	Resistor, 10 megohms ½ w.
R10	RC20AE105M	Resistor, 1.0 megohms ½ w.
R11	RC20AE225M	Resistor, 2.2 megohms ½ w.
R12	RC30AE220M	Resistor, 22 ohms 1 w.
R14	RC20AE122K	Resistor, 1200 ohms ½ w.
R15	RC20AE821K	Resistor, 820 ohms ½ w.
R16	RC20AE224M	Resistor, 220,000 ohms ½ w.
R17	RC20AE102M	Resistor, 1000 ohms ½ w.
R18	RC20AE475M	Resistor, 4.7 megohms ½ w.
R19	RC20AE270K	Resistor, 27 ohms ½ w.
R20	V-9125-2	Resistor, ballast, 2710 ohms
SW1	V-6198-6	Switch, on-off (consists of SW1 and R8)
SW2	V-9420	Switch, line battery
T1	V-6972-5	Transformer, 1st I-F
T2	V-6972-6	Transformer, 2nd I-F

following parts apply only to Models H-314P4, H-314P4U, H-315P4 and H-315P4U:

V-1157-10	**Cabinet (black cabinet, red grille)**
V-1157-11	**Cabinet (red cabinet, black grille)**
V-9751-3	**Handle (black)**
V-9751-4	**Handle (red)**
V-5698-5	**Knob (black)**
V-5698-6	**Knob (red)**

©John F. Rider

Compliments of www.nucow.com

MODELS H-316C7, H-326C7,
Ch. V-2136-1

SPECIFICATIONS

FREQUENCY RANGES:

Amplitude Modulation .....540 to 1615 kc.
Frequency Modulation .....88 to 108 mc.

INTERMEDIATE FREQUENCIES:

Amplitude Modulation .....455 kc.
Frequency Modulation .....10.7 mc.

TUBE COMPLEMENT:

1 12AT7 .....R-F Amp. and Mixer (FM)
1 12BE6 .....FM Osc. and AM Converter
1 12BA6 .....I-F Amp.
1 6BJ6 .....I-F Driver (FM)
1 12AL5 ..... Ratio Det. (FM)
1 12AV6 .....Det. and AVC (AM) and A-F Amp.
1 50L6GT .....Output Amp.

POWER OUTPUT:

Undistorted .....2.5 watts
Maximum .....3.0 watts

LOUDSPEAKER: .....10" PM

OPERATING
VOLTAGE: .....117 volts, 60 cycles AC

POWER CONSUMPTION: .....70 watts

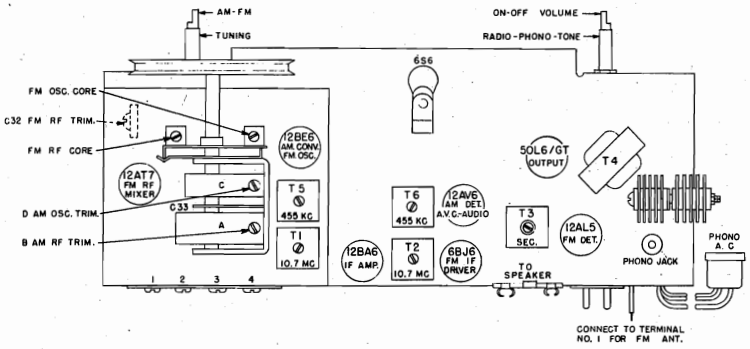

FIG. 2—TOP VIEW OF CHASSIS

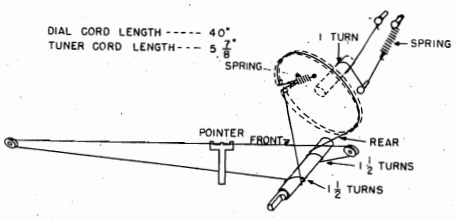

FIG. 3—DIAL DRIVE

©John F. Rider

Compliments of www.nucow.com

MODELS H-316C7, H-326C7,
Ch. V-2136-1

WARNING: The chassis of this receiver is connected directly to one side of the power line. When making repairs or adjustments, it is recommended that the chassis be isolated from the line by means of an isolation transformer. Otherwise, serious shock may result if the radio chassis and ground are contacted at the same time.

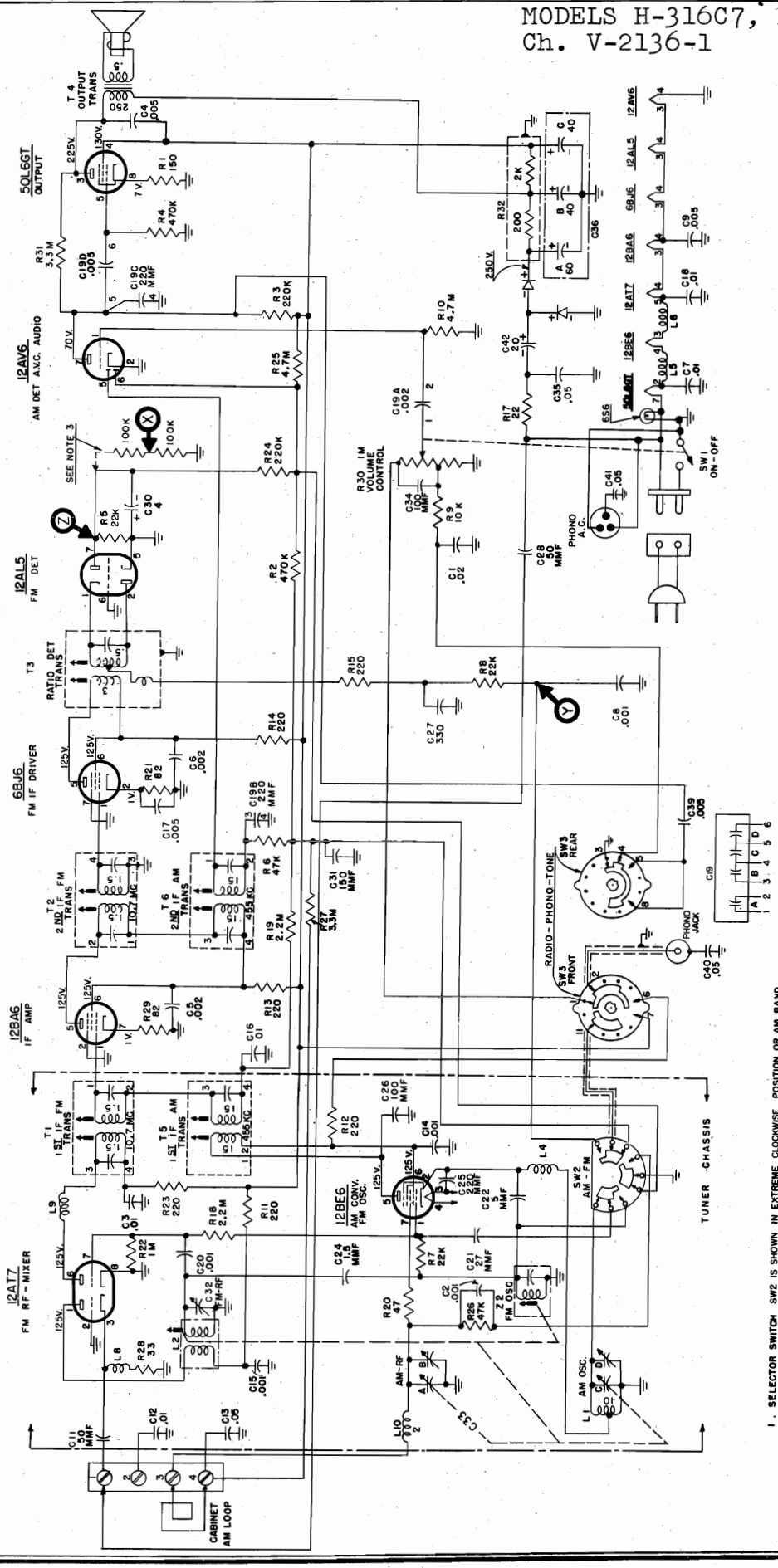

FIG. 1—SCHEMATIC DIAGRAM OF V-2136-1 CHASSIS

1. SELECTOR SWITCH SW2 IS SHOWN IN EXTREME CLOCKWISE POSITION OR AM BAND AS VIEWED FROM THE FRONT.
2. SELECTOR SWITCH SW3 IS IN EXTREME CLOCKWISE POSITION OR PHONO TREBLE POSITION AS VIEWED FROM FRONT.
3. TO BE INSTALLED FOR ALIGNMENT ONLY
4. ALL VOLTAGES MEASURED FROM CHASSIS (GROUND) USING A 20,000 OHM/VOLT METER. LINE VOLTAGE SET AT 117 V.A.C. VOLTAGES SHOULD BE AS SHOWN ± 20 PER CENT.

©John F. Rider

Compliments of www.nucow.com

MODELS H-316C7, H-326C7,
Ch. V2136-1

ALIGNMENT

BROADCAST BAND

Connect an output meter across the speaker voice coil.

While making the following adjustments, keep the volume control set for maximum output and the signal generator output attenuated to avoid AVC action.

Check the dial pointer position by meshing the tuning capacitor plates completely and seeing that the dial pointer is set on the end mark of the dial scale.

Step	*Connect Signal Generator to—*	*Signal Generator Frequency*	*Radio Dial Setting*	*Adjust*
1	Set the band switch to AM and the radio-phono-tone control to RADIO			
2	Stator of tuning capacitor (A) through a 0.1 mfd capacitor	455 kc.	minimum capacity	Pri. and sec. of T6 and T5 for max. output in order given
	NOTE: If the I-F transformers are badly mis-aligned, it may be impossible to obtain sufficient output using the above system. In this event, it will be necessary to align each transformer separately. Start with the last I-F transformer and work forward, connecting the signal generator to the control grid of the tube preceding the transformer under alignment.			
3	Radiated signal (no actual connection)	1615 kc.	minimum capacity	AM osc. trimmer (D) for max. output
4	Radiated signal (no actual connection)	1400 kc.	tune to signal	AM R-F trimmer (B) for max. output (rock-in adjustment)

FM BAND

Do not align the FM circuits until all AM adjustments have been completed.

Step	*Connect Signal Generator to—*	*Signal Generator Frequency*	*Radio Dial Setting*	*Adjust*
1	Set the band switch to FM.			
2	Connect two 100,000 ohm resistors (the resistances must be equal within 5 per cent) between pin No. 7 of the 12AL5 tube and ground as shown on the schematic diagram.			
3	Connect a V.T.V. M. between points "X" and "Y" (see schematic diagram).			
4	Pin No. 7 of 12AT7 through a 0.1 mfd mica capacitor	10.7 mc.	minimum capacity	Sec. of T3 for *zero* (use medium strength signal)
5	Connect the V.T.V.M. between point "Z" and ground.			
6	Same as step 4	10.7 mc.	minimum capacity	Pri. of T3 and pri. and sec. of T1 and T2 for max.
7	Reconnect the V.T.V.M. between points "X" and "Y" and increase the signal strength 10 times.			
8	Same as step 4	10.7 mc.	minimum capacity	Recheck sec. of T3 for *zero* voltage
9	Reconnect the V.T.V. M. between point "Z" and ground.			
10	Same as step 4	10.7 mc.	minimum capacity	Pri. of T3 for maximum voltage
11	Remove the two 100,000 ohm resistors that were inserted in step 2.			
12	FM ant. terminal through a 300 ohm non-inductive resistor	98 mc.	98 mc.	FM osc. core for maximum voltage
13	Same as step 12	98 mc.	98 mc.	FM R-F trimmer (C32) for maximum voltage
14	Same as step 12	105 mc.	tune to signal	FM R-F core for maximum voltage
15	Same as step 12	90 mc.	tune to signal	FM R-F trimmer (C32) for maximum voltage (rock-in)
16	Recheck steps 14 and 15 for tracking.			

PARTS LIST FOR MODEL H-316C7

CABINET AND MISCELLANEOUS

Part No.	*Description*
V-5982-6	Antenna assembly, AM loop .....
V-6120-1	Background, dial .....
V-1212-1	Cabinet (mahogany) .....
V-5860-11	Cable assembly, speaker .....
V-9822-1	Cable assembly, phono AC (female)
V-9833-1	Cable assembly, phono AC (male) .
V-6415-2	Cable, phono pick-up .....
V-9075-1	Clip, spring (ball head strike) .
V-5426	Clip, I-F mounting .....
V-9053	Connector, phono .....
V-3219S-1	Cord, dial drive (100' spool) ...
V-9845-1	Cover, back (record changer) ....
V-9834-1	Cover assembly, back (radio) ....
V-8340	Doors (matched pairs) .....
V-8341	Drawer, record changer (complete less hardware) .....
V-9835-1	Escutcheon, dial .....
V-9832-1	Grille assembly, panel .....
V-9091-1	Hinge, L. H. .....
V-9091-2	Hinge, R. H. .....
V-6146-1	Knob, on-off-volume .....
V-6146-5	Knob, AM-FM .....
V-9861-1	Knob, radio-phono-tone .....
V-9104-6	Knob, tuning .....
V-9252-2	Nameplate, Westinghouse .....
No. 6S6	Pilot light .....
V-9661	Plug, AC .....
V-9826-3	Pointer, dial .....
V-4967	Pull, drawer .....
V-3166S	Pulley, dial cord .....
V-9678-2	Pulley, gang .....
V-3353-11	Slide, mechanism, L. H. .....
V-3353-12	Slide, mechanism, R. H. .....
V-4292-1	Socket, miniature molded .....
V-5556-1	Socket, miniature (12AT7) .....
V-4292S-2	Socket, miniature molded (12BE6)
V-3163	Socket, octal wafer .....
V-9860-1	Socket, pilot light .....
V-9770-2	Speaker, 10" PM .....
V-3248S	Spring, dial drive .....
V-9076-1	Strike, ball head .....
V-9348	Terminal board, ant.-gnd. .....

©John F. Rider

Compliments of www.nucow.com

MODELS H-316C7, H-326C7, Ch. V-2136-1

V-2136-1 CHASSIS

Ref. No.	Part No.	Description
C1	RCP10W4202M	Capacitor, .02 mfd 400 v.
C2	V-9863-1	Capacitor, .001 mfd .....
C3	RCP10W4103M	Capacitor, .01 mfd 200 v. .
C4	RCP10W4502M	Capacitor, .005 mfd 400 v.
C5	RCP10W6202M	Capacitor, .002 mfd 600 v.
C6	RCP10W6202M	Capacitor, .002 mfd 600 v.
C7	RCP10W2103M	Capacitor, .01 mfd 200 v.
C8	RCP10W6102M	Capacitor, .001 mfd 600 v.
C9	V-5596	Capacitor, .005 mfd, hi-kap
C11	V-5658-10	Capacitor, 50 mmf .....
C12	RCP10W4103M	Capacitor, .01 mfd 400 v. .
C13	RCP10W2503M	Capacitor, .05 mfd 200 v. .
C14	V-5596	Capacitor, .005 mfd .....
C15	V-9863-1	Capacitor, .001 mfd .....
C16	RCP10W2103M	Capacitor, .01 mfd 200 v. .
C17	V-5596	Capacitor, .005 mfd .....
C18	RCP10W2103M	Capacitor, .01 mfd 200 v. .
C19	V-9634-1	Capacitor, multiple ceramic (A .002 mfd) (B 220 mfd) (C 220 mfd) (D .005 mfd)
C20	V-9863-1	Capacitor, .001 mfd .....
C21	R2CC30UK270K	Capacitor, 27 mmf .....
C22	R2CC30UK050D	Capacitor, 5 mmf .....
C24	V-5658-9	Capacitor, 1.5 mmf .....
C25	R5CC20ZY221M	Capacitor, 220 mmf .....
C26	RCM20D101J	Capacitor, 100 mmf .....
C27	RCM20A221M	Capacitor, 220 mmf (used when T3 is V-9048 or V-9984)
	RCM20A331M	Capacitor, 330 mmf (used when T3 is V-9828) .....
C28	V-5658-10	Capacitor, 50 mmf .....
C30	V-4637	Capacitor, 4 mfd 50 v. ....
C31	RCM20A151M	Capacitor, 150 mmf .....
C32	V-9670	Capacitor, trimmer (FM RF)
C33	V-9671-2	Capacitor, variable (consists of A, B, C and D)
C34	RCM20A101M	Capacitor, 100 mmf .....
C35	V-6772-4473M	Capacitor, .05 mfd 400 v.
C36	V-9919	Capacitor, 60-40-40 mfd 250 v. (consists of A, B, and C) .....
C39	RCP10W4502M	Capacitor, .005 mfd 400 v.
C40	RCP10W2503M	Capacitor, .05 mfd 200 v.
C41	RCP10W2503M	Capacitor, .05 mfd 200 v.
C42	V-9823	Capacitor, 20 mfd 200 v.
L1	V-9672	Coil, AM osc. .....
L2	V-9674	Coil, FM RF .....
L4	V-9099-1	Choke, RF .....
L5	V-9099-1	Choke, RF .....
L6	V-9099-1	Choke, RF .....
L8	V-9099-1	Choke, RF .....
L9	V-4886-12	Choke, RF ....
L10	V-6157	Coil, antenna loading .....

Ref. No.	Part No.	Description
	V-9640	Rectifier, selenium .....
R1	RC30AE151K	Resistor, 150 ohms 1 w.
R2	RC20AE474M	Resistor, 470,000 ohms ½ w
R3	RC20AE224M	Resistor, 220,000 ohms ½ w
R4	RC20AE474M	Resistor, 470,000 ohms ½ w
R5	RC20AE153K	Resistor, 15,000 ohms (used when T3 is V-9048 or V-9984)
	RC20AE223K	Resistor, 22,000 ohms ½ w. (used when T3 is V-9828)
R6	RC20AE473M	Resistor, 47,000 ohms ½ w
R7	RC20AE223K	Resistor, 22,000 ohms ½ w
R8	RC20AE223M	Resistor, 22,000 ohms ½ w
R9	RC20AE103M	Resistor, 10,000 ohms ½ w
R10	RC20AE475M	Resistor, 4.7 megohms ½ w
R11	RC20AE221M	Resistor, 220 ohms ½ w
R12	RC20AE221M	Resistor, 220 ohms ½ w
R13	RC20AE221M	Resistor, 220 ohms ½ w
R14	RC20AE221M	Resistor, 220 ohms ½ w
R15	RC20AE221M	Resistor, 220 ohms ½ w (used when T3 is V-9048 or V-9828)
	RC20AE471M	Resistor, 470 ohms ½ w (used when T3 is V-9984) .....
R17	V-6067-7	Resistor, 22 ohms 3 w. ...
R18	RC20AE225M	Resistor, 2.2 megohms ½ w
R19	RC20AE225M	Resistor, 2.2 megohms ½ w
R20	RC20AE470M	Resistor, 47 ohms ½ w ....
R21	RC20AE820K	Resistor, 82 ohms ½ w ....
R22	RC20AE105M	Resistor, 1 megohm ½ w ...
R23	RC20AE221M	Resistor, 220 ohms ½ w ...
R24	RC20AE224M	Resistor, 200,000 ohms ½ w
R25	RC20AE475M	Resistor, 4.7 megohm ½ w
R26	RC20AE473M	Resistor, 47,000 ohms ½ w
R27	RC20AE335M	Resistor, 3.3 megohms ½ w
R28	RC20AE330M	Resistor, 33 ohms ½ w ....
R29	RC20AE820K	Resistor, 82 ohms ½ w ....
•R30	V-9824-1	Control, vol. 1 megohm, on-off, selector switch ....
R31	RC20AE335M	Resistor, 3.3 megohms ½ w
R32	V-10054	Resistor, ballast (2000 ohms 6 w. - 200 ohms 3 w.) ...
•SW1	V-9824-1	Switch, on-off (consists of vol. and phono-tone) ....
SW2	V-9681-1	Switch, band (AM-FM) .....
•SW3	V-9824-1	Switch, phono-tone (consists of vol. and on-off)
T1	V-9688	Transformer, 1st FM I-F ..
T2	V-9642	Transformer, 2nd FM I-F ..
T3	V-9828	Transformer, ratio detector
T4	V-9827	Transformer, audio .....
T5	V-9649-1	Transformer, 1st AM I-F ..
T6	V-6130-1	Transformer, 2nd AM I-F ..
Z2	V-9675	Coil & cap. assy., FM osc
	V-9676-1	Core, FM-RF & osc. tuning

CABINET AND MISCELLANEOUS PARTS FOR MODEL H-326C7

When ordering parts, specify model number of set in addition to part number and description of part.

Part No.	Description
V-5982-4	Antenna assy., AM loop .....
V-6120-1	Background, dial .....
V-9485-5	Baffle and grille cloth assy..
V-1222-1	Cabinet .....
V-5860-3	Cable assy., speaker .....
V-9822-1	Cable assy., phono AC (female)
V-9833-1	Cable assy., phono AC (male) .
V-6415-2	Cable, phono pick-up .....
V-4898-1	Catch, bullet .....
V-5426	Clip, I-F mounting .....
V-9053	Connector, phono .....
V-3219S-1	Cord, dial drive (100' spool)
V-9834-1	Cover assy., back .....
V-8342	Door, upper (matched pairs) ..
V-8343	Door, lower (matched pairs) ..
V-9835-1	Escutcheon .....
V-10109-1	Hinge, L.H. .....
V-10109-2	Hinge, R.H. .....
V-5301-4	Knob, lower door .....
V-6146-1	Knob, on-off-volume .....
V-6146-5	Knob, AM-FM .....
V-9861-1	Knob, radio-phono-tone .....

Part No.	Description
V-9104-6	Knob, tuning .....
V-8344	Motor board (with rails) ....
No. 6S6	Pilot light .....
V-9661	Plug, AC .....
V-9826-3	Pointer, dial .....
V-9981-3	Pull, door .....
V-3166S	Pulley, dial cord .....
V-9678-2	Pulley, gang .....
V-9680-1	Sleeve, dial drive .....
V-3353-1	Slide mechanism, L.H. .....
V-3353-2	Slide mechanism, R.H. .....
V-4292-1	Socket, miniature molded (12BA6, 6BJ6, 12AL5, 12AV6)
V-5556-1	Socket, miniature (12AT7) ...
V-4292S-2	Socket, miniature molded (12BE6) .....
V-3163	Socket, octal wafer (50L6GT)
V-9860-1	Socket, pilot light .....
V-9431-3	Speaker, 12" PM .....
V-3248S	Spring, dial drive .....
V-4900-1	Strike, bullet .....
V-9348	Terminal board, ant.-gnd. ...

©John F. Rider

Compliments of www.nucow.com

MODELS H-318T5, H-320T5, Ch. V-2157:
H-318T5U, H-320T5U, Ch. V-2157U;
H-321T5, H-322T5, Ch. V-2157-1;
H-321T5U, H-322T5U, Ch. V-2157-1U

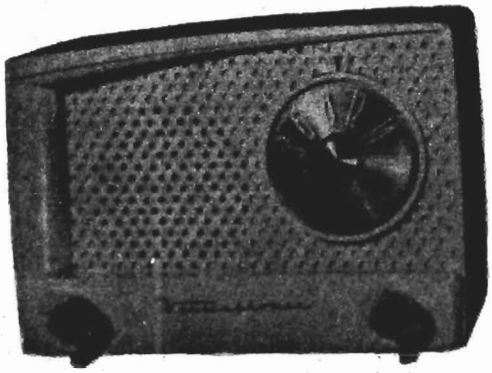

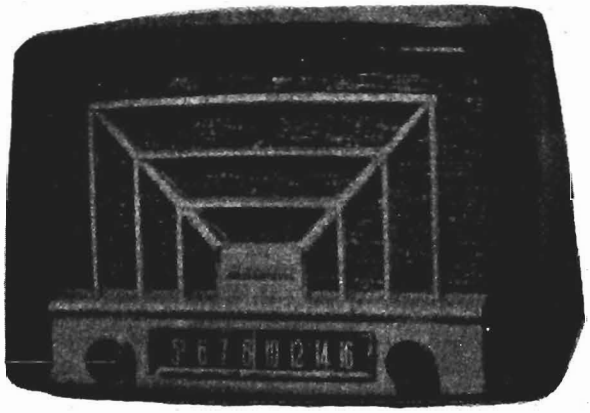

SPECIFICATIONS

FREQUENCY RANGE: .....540 to 1615 kc.

INTERMEDIATE FREQUENCY: .....455 kc.

TUBE COMPLEMENT:

1	12BE6	Converter
1	12BA6	I-F Amp.
1	12AV6	Det., AVC, and 1st A-F Amp.
1	50C5	Output Amp.
1	35W4	Rectifier

POWER OUTPUT:
Undistorted ..... 0.9 watt
Maximum ..... 1.5 watts

LOUDSPEAKER: .....4" P.M.

OPERATING VOLTAGE: .....105 to 120 volts, 50-60 cycles A-C or D-C

POWER CONSUMPTION: .....35 watts

WARNING: The V-2157 and V-2157-1 chassis are connected to one side of the power line. When making repairs or adjustments, it is recommended that the chassis be isolated from the line by means of an isolation transformer. Otherwise serious shock may result if the radio chassis and ground are contacted at the same time.

©John F. Rider

Compliments of www.nucow.com

MODELS H-318T5, H-320T5, Ch. V-2157;
H-318T5U, H-320T5U, Ch. V-2157U;
H-321T5, H-322T5, Ch. V-2157-1;
H-321T5U, H-322T5U, Ch. V-2157-1U

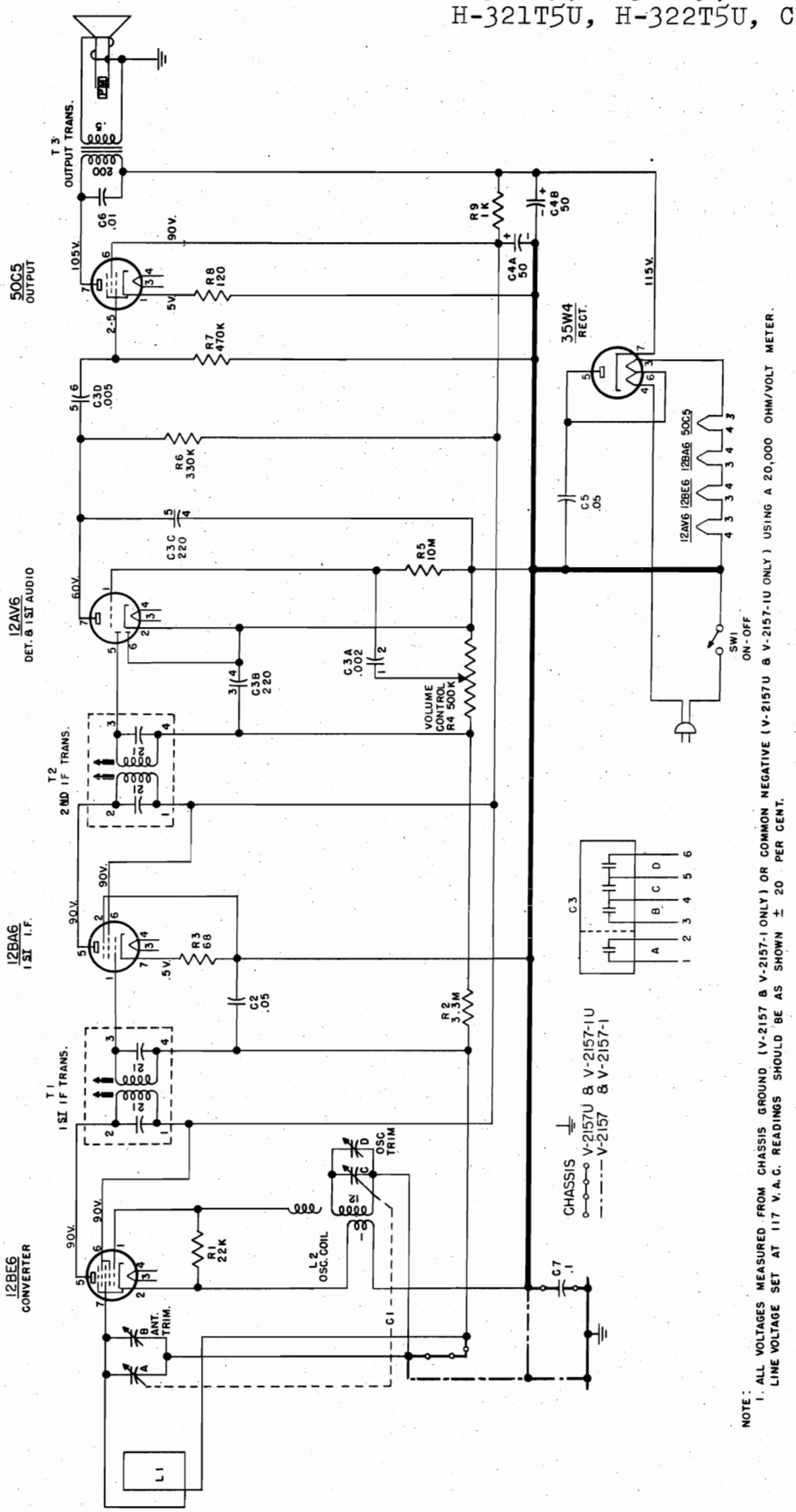

NOTE:
1. ALL VOLTAGES MEASURED FROM CHASSIS GROUND (V-2157 & V-2157-1 ONLY) OR COMMON NEGATIVE (V-2157U & V-2157-1U ONLY) USING A 20,000 OHM/VOLT METER.
LINE VOLTAGE SET AT 117 V.A.C. READINGS SHOULD BE AS SHOWN ± 20 PER CENT.

FIG. 1—SCHEMATIC DIAGRAM OF V-2157, V-2157U, V-2157-1, AND V-2157-1U CHASSIS

©John F. Rider

Compliments of www.nucow.com

MODELS H-318T5, H-320T5, Ch. V-2157; H-318T5U, H-320T5U, Ch. V2157U; H-321T5, H-322T5, Ch. V-2157-1; H-321T5U, H-322T5U, Ch. V-2157-1U

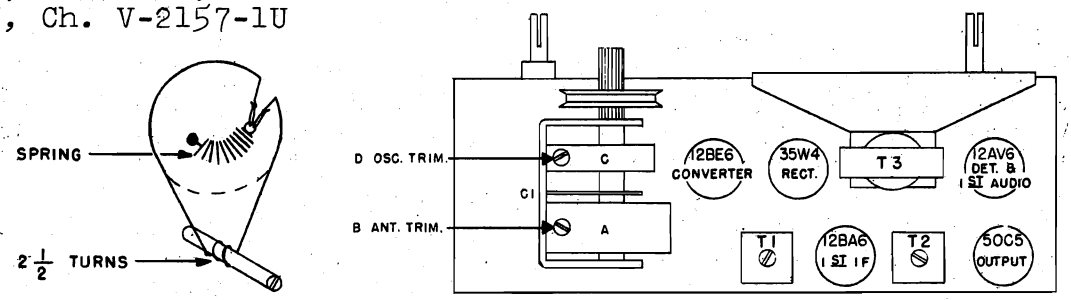

FIG. 2—DIAL DRIVE AND CHASSIS LAYOUT FOR V-2157 AND V-2157U CHASSIS

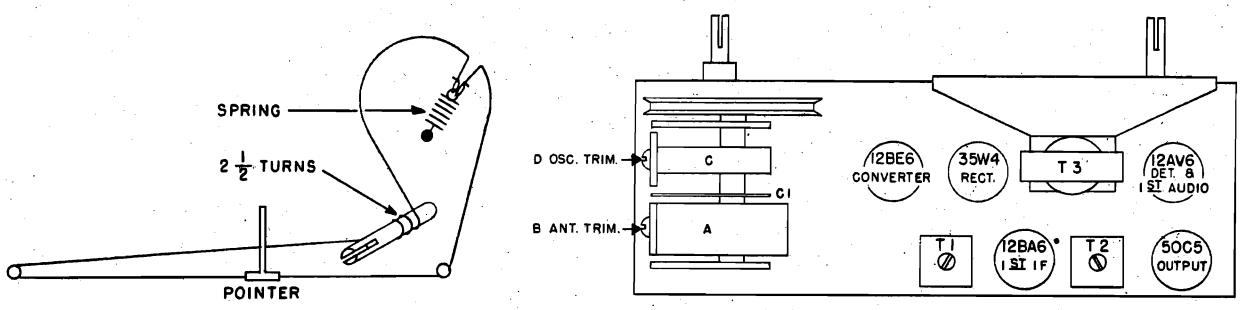

FIG. 3—DIAL DRIVE AND CHASSIS LAYOUT FOR V-2157-1 AND V-2157-1U CHASSIS

ALIGNMENT

It is recommended that the chassis be isolated from the power line by means of an isolation transformer.

Make certain that the dial pointer is correctly positioned.

While making the following adjustments, keep the volume control set for maximum output and the signal generator output attenuated to avoid AVC action.

Step	Connect Signal Generator to —	Signal Generator Frequency	Radio Dial	Adjust for Maximum Output —
1	Stator of R-F tuning capacitor (A) through a 0.1 mfd capacitor	455 kc.	Minimum capacity	Top and bottom slugs in 2nd and 1st I-F trans. in order given*
2	Same as step 1	1615 kc.	Minimum capacity	Osc. trimmer (D)
3	Radiated Signal	1400 kc.	1400 kc.	Ant. trimmer (B)

*It is recommended that a fiber aligning tool that snugly fits the slot in the powdered iron core be used to prevent chipping of the slot.

©John F. Rider

Compliments of www.nucow.com

CHASSIS V-2157, V-2157U, V-2157-1, V-2157-1U

PARTS LIST

H-318T5 AND H-318T5U CABINET PARTS

Part No.	*Description*
V-1219-1	Cabinet
V-10008-1	Dial
V-10009-1	Knob
V-5786	Spring, compression

H-320T5 AND H-320T5U CABINET PARTS

V-10012-2	Background, dial
V-9746-1	Baffle and grille cloth assy
V-1219-3	Cabinet
V-10008-3	Dial
V-10009-5	Knob
V-5786	Spring, compression

H-321T5 AND H-321T5U CABINET PARTS

V-10017-1	Baffle and grille cloth assy
V-1220-1	Cabinet
V-10013-3	Escutcheon
V-10009-1	Knob

H-322T5 AND H-322T5U CABINET PARTS

V-10017-2	Baffle and grille cloth assy
V-1220-2	Cabinet
V-10013-2	Escutcheon
V-10009-3	Knob

MISCELLANEOUS PARTS

V-3219S-1	Cord, dial drive
V-10001	Loop, antenna (chassis V-2157-1)
V-9994	Loop, antenna (chassis V-2157)
V-10002-2	Pointer (chassis V-2157-1)
V-9996-2	Shaft, tuning
V-9727-1	Speaker, 4" PM (includes T3)
V-10076-1	Spring, dial drive
V-9888-2	Socket, wafer (12BE6, 50C5 and 35W4)
V-9888-3	Socket, wafer (12BA6, and 12AV6)

CHASSIS PARTS

Ref. No.	*Part No.*	*Description*
C1	V-9990	Capacitor, variable (consists of A, B, C and D) (V-2157-1 chassis)
	V-10047	Capacitor, variable (consists of A, B, C and D) (V-2157 chassis)
C2	RCP10W2503M	Capacitor, .05 mfd 200 v.
C3	V-9634-1	Capacitor, multiple ceramic (consists of A,B,C and D)
C4	V-9991	Capacitor, electrolytic 50-50 mfd 150 v. (consists of A and B)
C5	RCP10W4503M	Capacitor, .05 mfd 400 v.
C6	RCP10W4103M	Capacitor, .01 mfd 400 v.
C7	RCP10W4104M	Capacitor, .1 mfd 400 v. (V-2157U and V-2157-1U chassis)
L1	V-9994	Loop, antenna (V-2157 chassis)
	V-10001	Loop, antenna (V-2157-1 chassis)
L2	V-9992	Coil, osc.
R1	RC20AE223M	Resistor, 22,000 ohms ½ w.
R2	RC20AE335M	Resistor, 3.3 meg. ½ w.
R3	RC20AE680M	Resistor, 68 ohms ½ w.
*R4	V-9993-1	Control, volume 500,000 ohms (assy consists of R4 and SW1)
R5	RC20AE106M	Resistor, 10 megs.
R6	RC20AE334M	Resistor, 330,000 ohms ½ w.
R7	RC20AE474M	Resistor, 470,000 ohms ½ w.
R8	RC20AE121M	Resistor, 120 ohms ½ w.
R9	RC30AE102M	Resistor, 1000 ohms 1 w.
*SW1	V-9993-1	Switch, on-off (assy consists of SW1 and R4)
T1	V-9735-1	Transformer, 1st I-F
T2	V-9735-1	Transformer, 2nd I-F
T3	V-9727-1	Transformer, audio (includes T3 and speaker)

©John F. Rider

Compliments of www.nucow.com

MODELS H-323T5, Ch. V-2157-2; H-323T5U, Ch. V-2157-2U

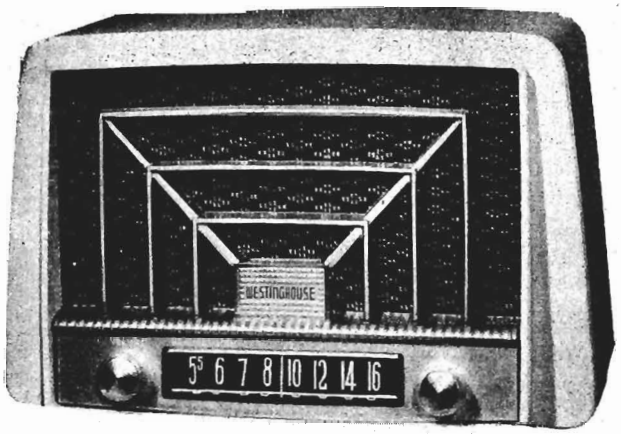

FREQUENCY RANGE: .....540 to 1615 kc.

INTERMEDIATE FREQUENCY: .....455 kc.

TUBE COMPLEMENT:

1	12BE6	Converter
1	12BA6	I-F Amp.
1	12AV6	Det., AVC, and 1st A-F Amp.
1	50C5	Output Amp.
1	35W4	Rectifier

POWER OUTPUT:

Undistorted .....0.9 watt

Maximum .....1.5 watts

LOUDSPEAKER: .....4" P.M.

OPERATING VOLTAGE: .....105 to 120 volts, 50-60 cycles A-C or D-C

POWER CONSUMPTION: .....35 watts

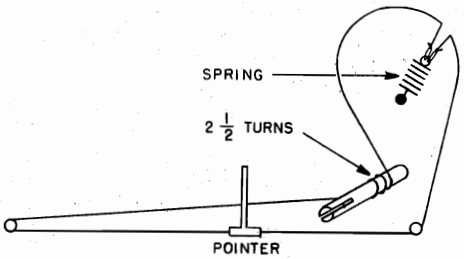

FIG. 1—DIAL DRIVE

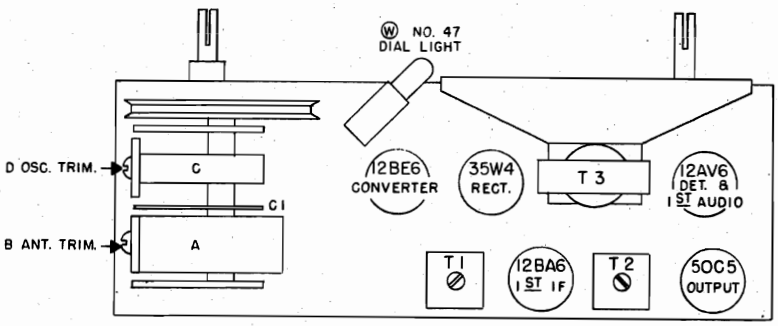

FIG. 2—CHASSIS LAYOUT

WARNING: The V-2157-2 chassis is connected directly to one side of the power line. When making repairs or adjustments, it is recommended that the chassis be isolated from the line by means of an isolation transformer. Otherwise serious shock may result if the radio chassis and ground are contacted at the same time.

©John F. Rider

Compliments of www.nucow.com

MODELS H-323T5, Ch. V-2157-2;
H-323T5U, Ch. V-2157-2U

ALIGNMENT

It is recommended that the chassis be isolated from the power line by means of an isolation transformer.

Make certain that the dial pointer is correctly positioned.

While making the following adjustments, keep the volume control set for maximum output and the signal generator output attenuated to avoid AVC action.

Step	Connect Signal Generator to —	Signal Generator Frequency	Radio Dial	Adjust for Maximum output—
1	Stator of R-F tuning capacitor (A) through a 0.1 mfd capacitor	455 kc.	Minimum capacity	Top and bottom slugs in 2nd and 1st I-F trans. in order given*
2	Same as step 1	1615 kc.	Minimum capacity	Osc. trimmer (D)
3	Radiated Signal	1400 kc.	1400 kc.	Ant. trimmer (B)

*It is recommended that a fiber aligning tool that snugly fits the slot in the powdered iron core be used to prevent chipping of the slot.

PARTS LIST FOR MODELS H-323T5 AND H-323T5U

When ordering parts, specify model number of set in addition to part number and description of part.

CABINET AND ACCESSORIES

Part No.	*Description*
V-6120-3	Background, dial
V-10017-3	Baffle and grille cloth assy
V-1220-3	Cabinet
V-3219S-1	Cord, dial drive
V-10013-3	Escutcheon
V-10009-5	Knob
No. 47	Light, pilot
V-10002-2	Pointer
V-9996-2	Shaft, tuning
V-9122-2	Socket, dial light
V-9888-2	Socket (12BE6, 50C5 and 35W4)
V-9888-3	Socket (12AV6 and 12BA6)
V-10079-1	Speaker, 4" PM (includes T3)

V-2157-2 AND V-2157-2U CHASSIS

Ref. No.	*Part No.*	*Description*
C1	V-9990	Capacitor, variable (consists of A, B, C and D)
C2	RCP10W2503M	Capacitor, .05 mfd 200 v.
C3	V-9634-1	Capacitor, multiple ceramic (consists of A, B, C and D)
C4	V-9991	Capacitor, electrolytic 50-50 mfd 150 v. (consists of A and B)
C5	RCP10W4503M	Capacitor, .05 mfd 400 v.
C6	RCP10W4103M	Capacitor, .01 mfd 400 v.
C7	RCP10W4104M	Capacitor, .1 mfd 400 v. (V-2157-2U only)
C8	RCP10W2203M	Capacitor, .02 mfd 200 v.
L1	V-10001	Loop, antenna
L2	V-9992	Coil, osc.
R1	RC20AE223M	Resistor, 22,000 ohms ½ w.
R2	RC20AE335M	Resistor, 3.3 meg. ½ w.
R3	RC20AE680M	Resistor, 68 ohms ½ w.
*R4	V-9993-2	Control, volume 500,000 ohms (assy consists of R4 and SW1)
R5	RC20AE106M	Resistor, 10 megs.
R6	RC20AE334M	Resistor, 330,000 ohms ½ w.
R7	RC20AE474M	Resistor, 470,000 ohms ½ w.
R8	RC20AE121M	Resistor, 120 ohms ½ w.
R9	RC30AE102M	Resistor, 1000 ohms 1 w.
R10	RC20AE103M	Resistor, 10,000 ohms ½ w.
*SW1	V-6198-5	Switch, on-off (assy consists of SW1 and R4)
T1	V-9735-1	Transformer, 1st I-F
T2	V-9735-1	Transformer, 2nd I-F
T3	V-10079-1	Transformer, audio (consists of T3 and speaker)

©John F. Rider

Compliments of www.nucow.com

MODELS H-323T5, Ch. V-2157-2;
H-323T5U, Ch. V-2157-2U

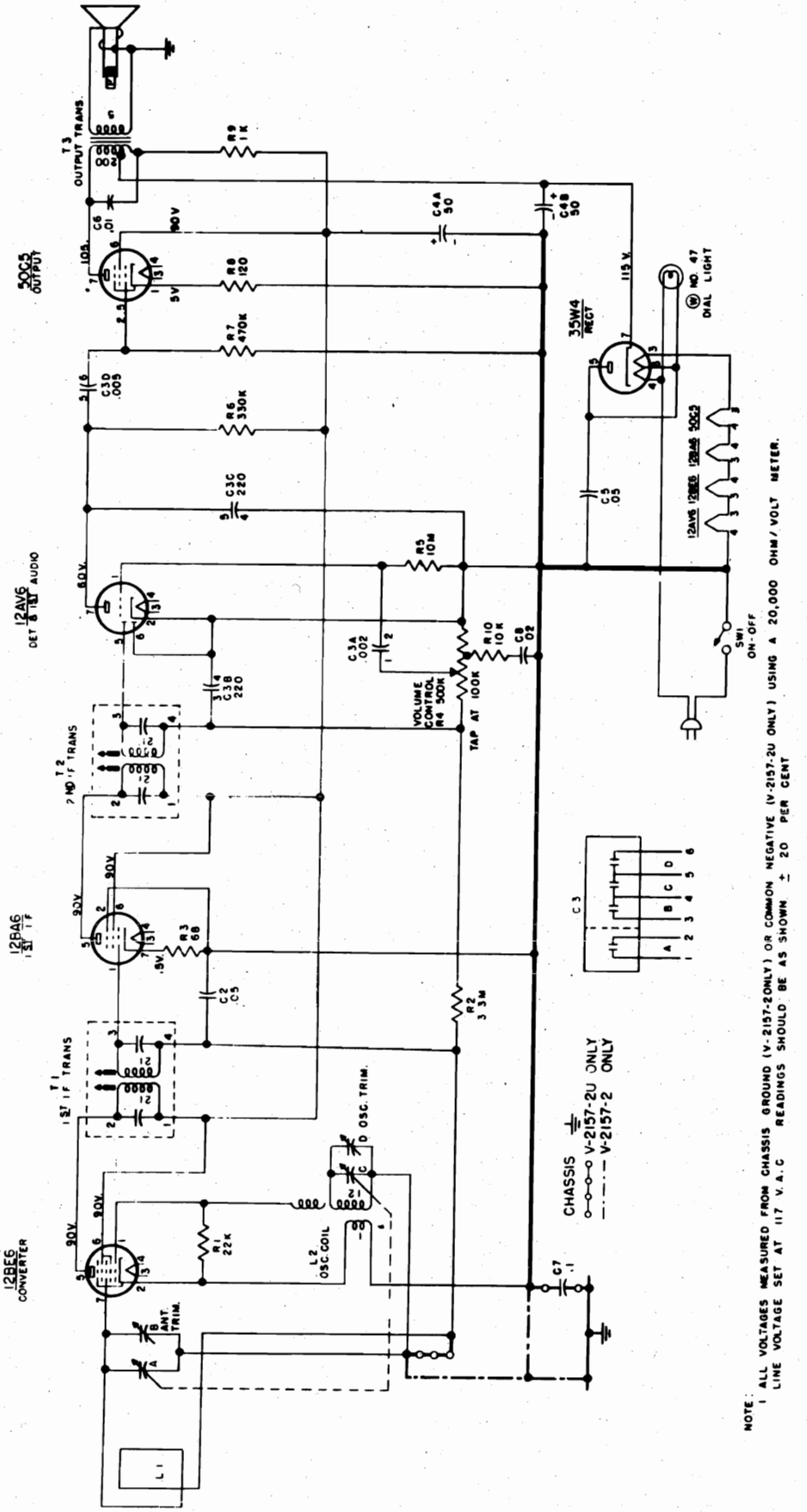

FIG. 3—SCHEMATIC DIAGRAM OF V-2157-2 AND V-2157-2U CHASSIS

©John F. Rider

Compliments of www.nucow.com

MODELS H-324T7, H-325T7, Ch. V-2136-2; H-324T7U, H-325T7U, Ch. V-2136

SPECIFICATIONS

FREQUENCY RANGES:

Amplitude Modulation ..... 540 to 1615 kc.
Frequency Modulation ..... 88 to 108 mc.

INTERMEDIATE FREQUENCIES:

Amplitude Modulation ..... 455 kc.
Frequency Modulation ..... 10.7 mc.

TUBE COMPLEMENT:

1 12AT7 ..... R-F Amp. and Mixer (FM)
1 12BE6 ..... FM Osc. and AM Converter
1 12BA6 ..... I-F Amp.
1 6BJ6 ..... I-F Driver (FM)
1 12AL5 ..... Ratio Det. (FM)
1 12AV6 .. Det. and AVC (AM) and A-F Amp.
1 50C5 ..... Output Amp.

POWER OUTPUT:

Undistorted..... 1.0 watts
Maximum ..... 1.9 watts

LOUDSPEAKER: ..... 5¼" PM

OPERATING VOLTAGE:.. 117 volts, DC or 60 cycles AC

POWER CONSUMPTION: ..... 35 watts

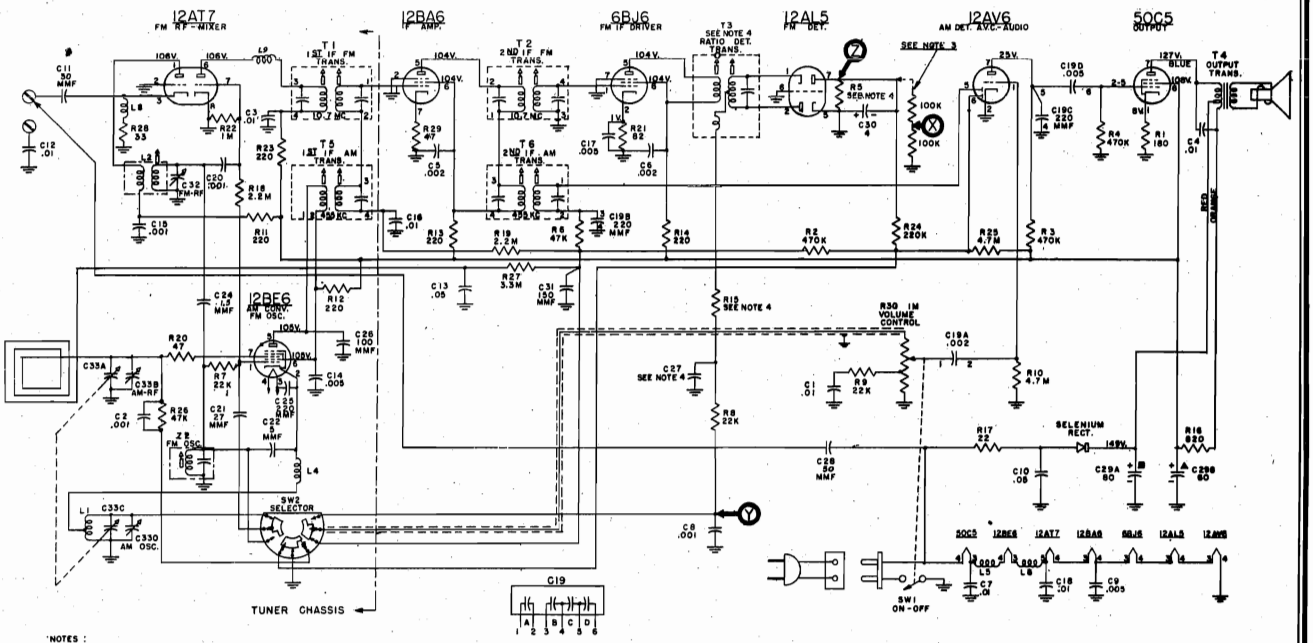

NOTES:
1. SELECTOR SWITCH SW2 IS SHOWN IN EXTREME CLOCKWISE POSITION OR AM BAND. EXTREME COUNTER CLOCKWISE POSITION IS FM BAND.
2. ALL VOLTAGES MEASURED FROM CHASSIS (GROUND) USING A 20,000 OHM/VOLT METER. LINE VOLTAGE SET AT 117V.A.C. VOLTAGES SHOULD BE AS SHOWN ± 20 PER CENT.
3. TO BE INSTALLED FOR ALIGNMENT ONLY.
4. TRANSFORMER V-9048 USE R15=220Ω C27=220MMFD R5=15KΩ
V-9984 USE R15=470Ω C27=220MMFD R5=15KΩ
V-9828 USE R15=220Ω C27=330MMFD R5=22KΩ

FIG. 1—SCHEMATIC DIAGRAM OF V-2136 CHASSIS

©John F. Rider

Compliments of www.nucow.com

MODELS H-324T7, H-325T7,
Ch. V-2136-2; H-324T7U,
H-325T7U, Ch. V-2136

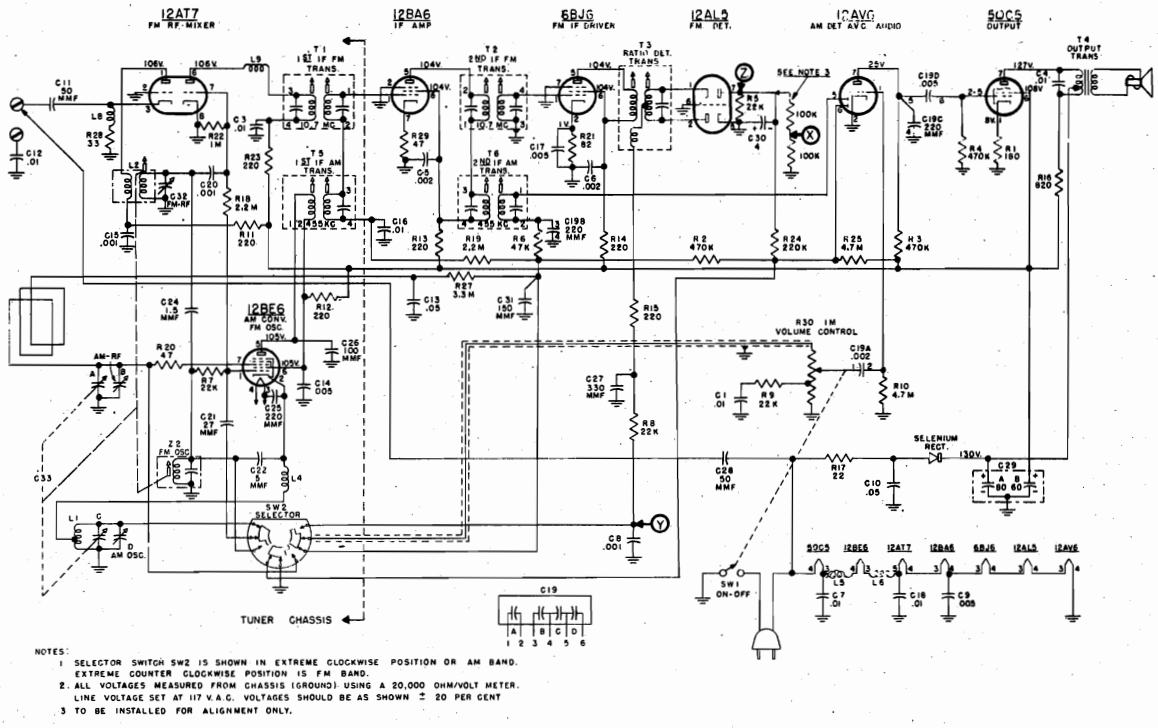

FIG. 2—SCHEMATIC DIAGRAM OF V-2136-2 CHASSIS

WARNING

The chassis is connected directly to one side of the power line. When making repairs or adjustments, it is recommended that the chassis be isolated from the line by means of an isolation transformer. Otherwise, serious shock may result if the radio chassis and ground are contacted at the same time.

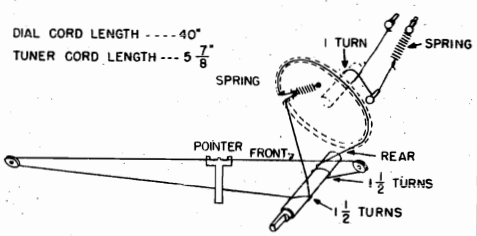

FIG. 3—DIAL DRIVE

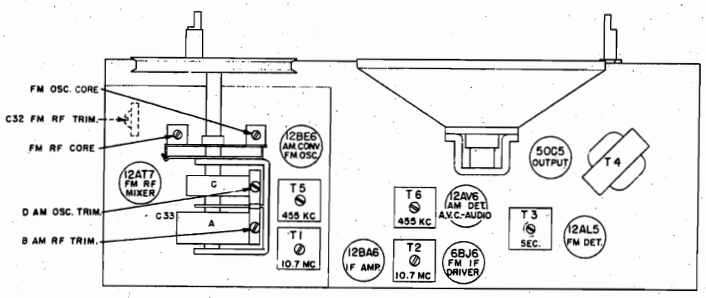

FIG. 4—TOP VIEW OF CHASSIS

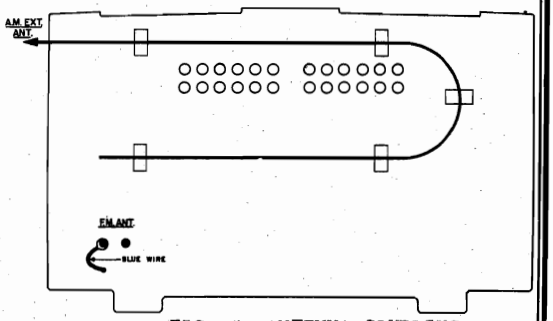

FIG. 5—ANTENNA COUPLING

ANTENNA INFORMATION

An external AM antenna can be coupled to the set by taping the lead-in wire to the outside of the rear cover as shown in Fig. 5. The wire should be dressed in the position shown and can be held in place with adhesive tape or other similar material.

The blue wire emerging from the hole in the rear cover is a "line" antenna for FM reception. It should be connected to the left antenna terminal as shown in Fig. 5. If an external FM antenna is to be used, disconnect the blue wire and connect the transmission line to the two terminals.

©John F. Rider

Compliments of www.nucow.com

MODELS H-324T7, H-325T7, Ch. V-2136-2; H-324T7U, H-325T7U, Ch. V-2316

ALIGNMENT

BROADCAST BAND

Connect an output meter across the speaker voice coil.

While making the following adjustments, keep the volume control set for maximum output and the signal generator output attenuated to avoid AVC action.

Check the dial pointer position by meshing the tuning capacitor plates completely and seeing that the dial pointer is set on the end mark of the dial scale.

Step	*Connect Signal Generator to—*	*Signal Generator Frequency*	*Radio Dial Setting*	*Adjust*
1	Set the band switch to AM			
2	Stator of tuning capacitor (A) through a 0.1 mfd capacitor	455 kc.	minimum capacity	Pri. and sec. of T6 and T5 for max. output in order given
	NOTE: If the I-F transformers are badly mis-aligned, it may be impossible to obtain sufficient output using the above system. In this event, it will be necessary to align each transformer separately. Start with the last I-F transformer and work forward, connecting the signal generator to the control grid of the tube preceding the transformer under alignment.			
3	Radiated signal (no actual connection)	1615 kc.	minimum capacity	AM osc. trimmer (D) for max. output
4	Radiated signal (no actual connection)	1400 kc.	tune to signal	AM R-F trimmer (B) for max. output (rock-in adjustment)

FM BAND

Do not align the FM circuits until all AM adjustments have been completed.

Step	*Connect Signal Generator to—*	*Signal Generator Frequency*	*Radio Dial Setting*	*Adjust*
1	Set the band switch to FM			
2	Connect two 100,000 ohm resistors (the resistances must be equal within 5 per cent) between pin No. 7 of the 12AL5 tube and ground as shown on the schematic diagram.			
3	Connect a V.T.V.M. between points "X" and "Y" (see schematic diagram).			
4	Pin No. 7 of 12AT7 through a .01 mfd mica capacitor	10.7 mc.	minimum capacity	Sec. of T3 for *zero* (use medium strength signal)
5	Connect the V.T.V.M. between point "Z" and ground.			
6	Same as step 4	10.7 mc.	minimum capacity	Pri. of T3 and pri. and sec. of T1 and T2 for max.
7	Reconnect the V.T.V.M. between points "X" and "Y" and increase the signal strength 10 times.			
8	Same as step 4	10.7 mc.	Minimum capacity	Recheck sec. of T3 for *zero* voltage
9	Reconnect the V.T.V.M. between point "Z" and ground.			
10	Same as step 4	10.7 mc.	minimum capacity	Pri. of T3 for maximum voltage
11	Remove the two 100,000 ohm resistors that were inserted in step 2.			
12	FM ant. terminal through a 300 ohm non-inductive resistor	98 mc.	98 mc.	FM osc. core for maximum voltage
13	Same as step 12	98 mc.	98 mc.	FM R-F trimmer (C32) for maximum voltage
14	Same as step 12	105 mc.	tune to signal	FM R-F core for maximum voltage
15	Same as step 12	90 mc.	tune to signal	FM R-F trimmer (C32) for maximum voltage (rock-in)
16	Recheck steps 14 and 15 for tracking.			

©John F. Rider

Compliments of www.nucow.com

MODELS H-324T7, H-325T7,
Ch. V-2316-2; H-324T7U,
H-325T7U, Ch. V-2316

PARTS LIST FOR MODELS H-324T7, H-324T7U, H-325T7 AND H-325T7U

WHEN ORDERING PARTS, SPECIFY MODEL NUMBER OF SET IN ADDITION TO PART NUMBER AND DESCRIPTION OF PART.

CABINET AND MISCELLANEOUS

Part No.	Description
V-6120-1	Background, dial .....
V-1199-4	Cabinet (black) .....
V-1199-3	Cabinet (ivory) .....
V-5426	Clip, I-F mounting .....
V-3219S-1	Cord, dial drive (100' spool) ....
V-9636-1	Cover assembly, back (V-2136 chassis) .....
V-9636-2	Cover assembly, back (V-2136-2 chassis) .....
V-9651-1	Cover, back .....
V-9637-1	Foot, mounting .....
V-6146-11	Knob, off-on, volume, front (ivory)
V-6146-15	Knob, off-on, volume, front (black)
V-6146-10	Knob, band (ivory) .....
V-6146-14	Knob, band (black) .....
V-9104-3	Knob, off-on, volume (rear) .....
V-9104-2	Knob, tuning (rear) .....
V-9653	Loop, antenna .....
V-9104-7	Knob, tuning, rear (black) .....
V-9104-8	Knob, on-off, volume, rear (black) .....
V-9506-1	Nameplate, Westinghouse .....
V-9661	Plug, power, male (V-2136 chassis)
V-9639-1	Pointer .....
V-9678-2	Pulley, gang .....
V-3166S	Pulley, dial cord .....
V-9655	Shell, interlock (V-2136 chassis)
V-9654	Socket, interlock (V-2136 chassis)
V-9641-1	Speaker, 5¼ PM .....
V-3248S	Spring, dial drive .....
V-5421-5	Washer, felt (knobs) .....
V-4292-1	Socket, miniature molded (50C5) ..
V-6878-2	Socket, miniature wafer (12BA6, 6BJ6, 12AL5, 12AV6) .....
V-5556-2	Socket, miniature (12AT7) .....
V-4292S-2	Socket, miniature molded (12BE6) .

V-2136 AND V-2136-2 CHASSIS

Ref. No.	Part No.	Description
C1	RCP10W2103M	Capacitor, .01 mfd 200 v.
C2	V-5596	Capacitor, .005 mfd (V-2136 chassis) .....
C3	RCP10W4103M	Capacitor, .01 mfd 400 v.
C4	RCP10W4103M	Capacitor, .01 mfd 400 v.
C5	RCP10W6202M	Capacitor, .002 mfd 600 v.
C6	RCP10W6202M	Capacitor, .002 mfd 600 v.
C7	RCP10W2103M	Capacitor, .01 mfd 200 v.
C8	RCP10W6102M	Capacitor, .001 mfd 600 v.
C9	V-5596	Capacitor, .005 mfd .....
C10	V-6023-4503M	Capacitor, .05 mfd 400 v.
C11	V-5658-10	Capacitor, 50 mmf .....
C12	RCP10W2103M	Capacitor, .01 mfd 200 v.
C13	RCP10W2503M	Capacitor, .05 mfd 200 v.
C14	V-5596	Capacitor, .005 mfd .....
C15	V-9863-1	Capacitor, .001 mfd .....
C16	RCP10W2103M	Capacitor, .01 mfd 200 v.
C17	V-5596	Capacitor, .005 mfd .....
C18	RCP10W2103M	Capacitor, .01 mfd 200 v.
C19	V-9634-1	Capacitor, multiple ceramic .002 mfd, 220 mmf, 220 mmf, .005 mfd .....
C20	V-9863-1	Capacitor, .001 mfd .....
C21	R2CC30UK270K	Capacitor, 27 mmf .....
C22	R2CC30UK050D	Capacitor, 5 mmf .....
C24	V-5658-9	Capacitor, 15 mmf .....
C25	R5CC20ZY221M	Capacitor, 220 mmf .....
C26	RCM20D101J	Capacitor, 100 mfd .....
C27	RCM20A331M	Capacitor, 330 mmf .....
C28	V-5658-10	Capacitor, 50 mmf .....
C29	V-9920	Capacitor, electrolytic, 80 mfd 150 v., 60 mfd 150 v. .....
C30	V-4637	Capacitor, electrolytic, 4 mfd 50 v. .....
C31	RCM20A151M	Capacitor, 150 mmf .....
C32	V-9670	Capacitor, trimmer (FM RF)
C33	V-9671-2	Capacitor, variable tuning (consists of A, B, C, and D) .....
L1	V-9672	Coil AM osc. .....
L2	V-9674	Coil, FM RF .....
	V-9676-1	Core, FM RF and osc. tuning
L4	V-9099-1	Choke, 1.1 microhenries ..
L5	V-9099-1	Choke, 1.1 microhenries ..
L6	V-9099-1	Choke, 1.1 microhenries ..
L8	V-9099-1	Choke, antenna input .....
L9	V-4886-12	Choke, RF .....
	V-9640	Rectifier, selenium .....
R1	RC30AE181K	Resistor, 180 ohms 1 w.
R2	RC20AE474M	Resistor, 470,000 ohms ½ w.
R3	RC20AE474M	Resistor, 470,000 ohms ½ w.
R4	RC20AE474M	Resistor, 470,000 ohms ½ w.
R5	RC20AE223K	Resistor, 22,000 ohms ½ w.
R6	RC20AE473M	Resistor, 47,000 ohms ½ w.
R7	RC20AE223M	Resistor, 22,000 ohms ½ w.
R8	RC20AE223M	Resistor, 22,000 ohms ½ w.
R9	RC20AE223M	Resistor, 22,000 ohms ½ w.
R10	RC20AE475M	Resistor, 4.7 megohms ½ w.
R11	RC20AE221M	Resistor, 220 ohms ½ w. ..
R12	RC20AE221M	Resistor, 220 ohms ½ w. ..
R13	RC20AE221M	Resistor, 220 ohms ½ w. ..
R14	RC20AE221M	Resistor, 220 ohms ½ w. ..
R15	RC20AE221M	Resistor, 220 ohms ½ w. ..
R16	V-6984-10	Resistor, 820 ohms 5 w. ..
R17	RC30AE220K	Resistor, 22 ohms 1 w. ...
R18	RC20AE225M	Resistor, 2.2 megohms ½ w.
R19	RC20AE225M	Resistor, 2.2 megohms ½ w.
R20	RC20AE470M	Resistor, 47 ohms ½ w. ...
R21	RC20AE820K	Resistor, 82 ohms ½ w. ...
R22	RC20AE105M	Resistor, 1 megohm ½ w. ..
R23	RC20AE221M	Resistor, 220 ohms ½ w. ..
R24	RC20AE224M	Resistor, 220,000 ohms ½ w.
R25	RC20AE475M	Resistor, 4.7 megohms ½ w.
R26	RC20AE473M	Resistor, 47,000 ohms ½ w. (V-2136 chassis) .....
R27	RC20AE335M	Resistor, 3.3 megohms ½ w.
R28	RC20AE330M	Resistor, 33 ohms ½ w. ...
R29	RC20AE470M	Resistor, 47 ohms ½ w. ...
*R30	V-9673-1 assy	Control, volume 1 megohm (assy consists of R30 and SW1) .....
*SW1	V-9673-1 assy	Switch, on-off (assy consists of R30 and SW1) ...
SW2	V-9681-1	Switch, selector .....
T1	V-9688	Transformer, 1st FM IF ...
T2	V-9642	Transformer, 2nd FM IF ...
T3	V-9828	Transformer, ratio detector
T4	V-9665	Transformer, output
T5	V-9649-1	Transformer, 1st AM IF ...
T6	V-6130-1	Transformer, 2nd AM IF ...
Z2	V-9675	Coil and capacitor assy, FM osc. .....
	V-9676-1	Core, FM RF and osc. tuning

©John F. Rider

Compliments of www.nucow.com

MODEL G503, Ch. 5G41

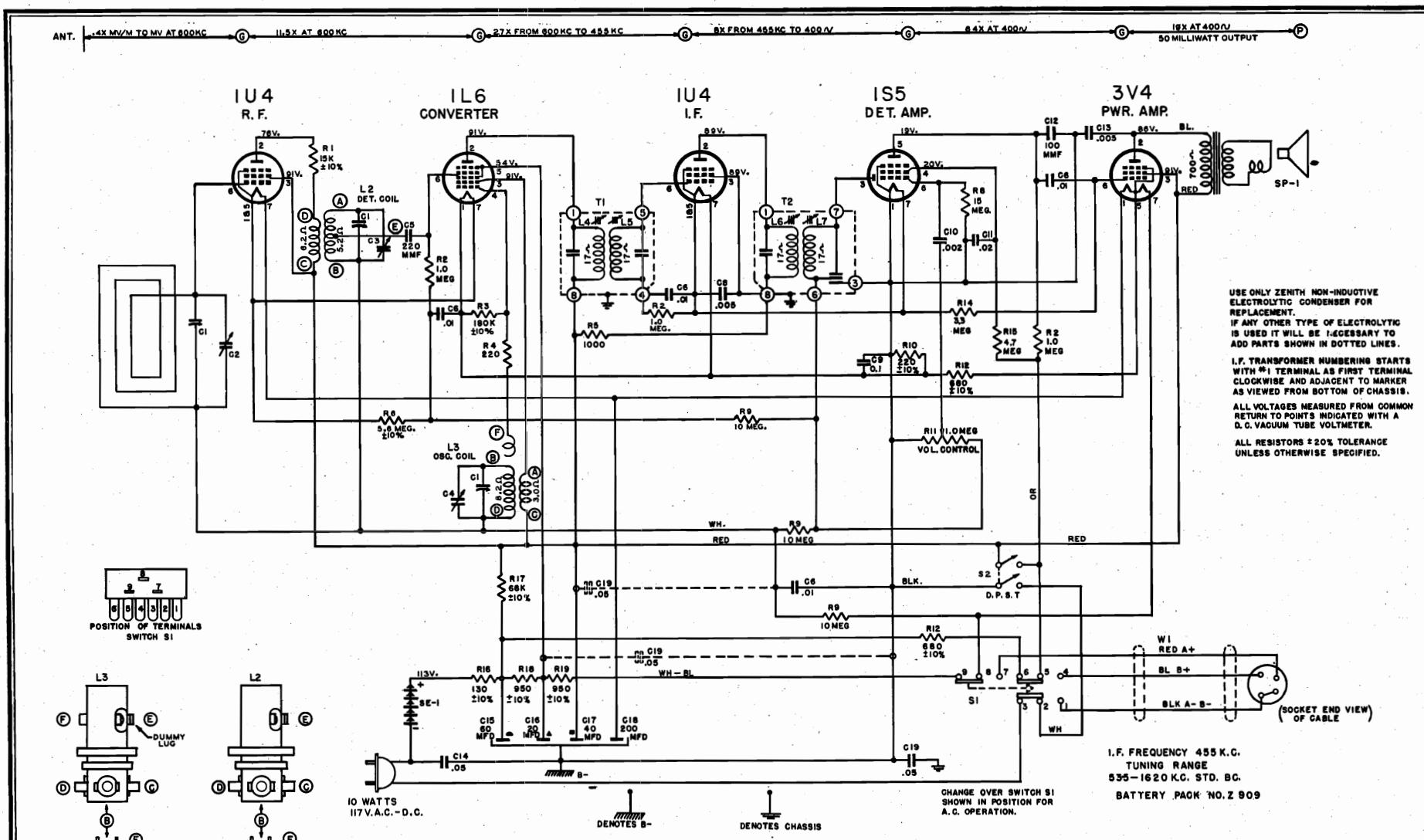

The 5G41 chassis is an AC, DC or battery operated superheterodyne. The chassis is isolated from the DC circuit, and all measurements must be made from a common negative point. The most convenient place to reach this negative point is the negative side or container of the electrolytic. When the change-over Switch S1 is in AC position, the DC resistance from chassis to any circuit must be almost infinite. If any circuit becomes grounded a hum will result. Microphonic tubes will cause audio howl. Check the 1L6 and 1S5.

The wavemagnet is connected to the chassis by two wires that pass through the hollow dial pivots. If the R.F. becomes weak or dead, check the D.C. resistance of the wavemagnet. This D.C. resistance should be approximately .9 ohm. If it is open check the wavemagnet.

©John F. Rider

Compliments of www.nucow.com

TUBE AND TRIMMER LOCATION

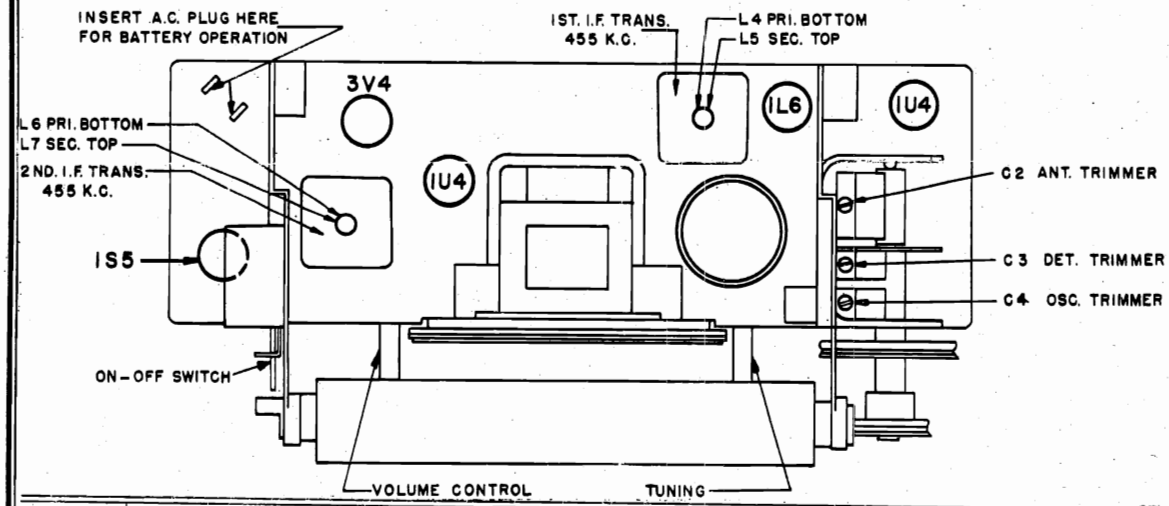

DETAILED VIEW OF I. F. TRANSFORMERS.

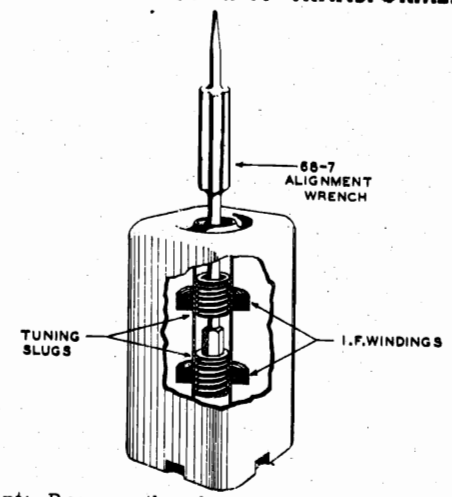

OPERATION	CONNECT OSCILLATOR TO	DUMMY ANTENNA	INPUT SIG. FREQUENCY	BAND	SET DIAL TO	TRIMMERS	PURPOSE
1	Converter Grid	.1 Mfd	455 Kc.	BC	600 Kc.	L4, 5, 6 & 7	I.F. Alignment
2	Two turns loosely coupled to Wavemagnet		1600 Kc.	BC	1600 Kc.	Osc. Trim. C4	Set Oscillator to scale
3	Two turns loosely coupled to Wavemagnet		1400 Kc.	BC	1400 Kc.	Ant. & Det. Trims C2 & C3	Align Wavemagnet

IF Alignment: Remove the chassis from the cabinet and arrange the units so that the wavemagnet can be connected. All the connections and adjustments can be made from the top of the chassis. Connect a signal generator, through a .1 mfd. dummy antenna, to the converter grid and B- (common return). Connect an output meter across the voice coil of the speaker (two lugs provided). Set the signal generator to 455 Kc. and adjust L4, L5, L6 and L7 for the maximum indication on the output meter. Always keep the signal output from the generator just high enough to get an indication, otherwise excessive loading may result.

RF Alignment: Connect a two turn loop across the leads of the signal generator, loosely couple this loop to the wavemagnet. Set the signal generator and the dial pointer of the receiver to 1600 Kc. and adjust C4 oscillator trimmer to resonance. Set the signal generator and dial pointer to 1400 and adjust C2 and C3 antenna detector trimmers to resonance. These trimmers are on the top of gang condenser. Check operation and re-install set in cabinet. Tune in a weak station near 1400 Kc. or use background noise and re-adjust antenna trimmer for maximum sensitivity.

The I.F. transformers incorporated in this receiver are of the new permeability tuned type. The advantage of an I.F transformer of this type is its extreme stability under various humidity and temperature conditions. The upper coil is the secondary and the lower the primary. When adjusting these I.F. transformers the tuning wrench 68-7 can be inserted into the top slug, rotated until maximum output is obtained and then dropped down to the lower slug and the same operation repeated. The tuning wrench is so designed that turning one slug does not affect the adjustment of the other.

DIAL CABLE DRAWING

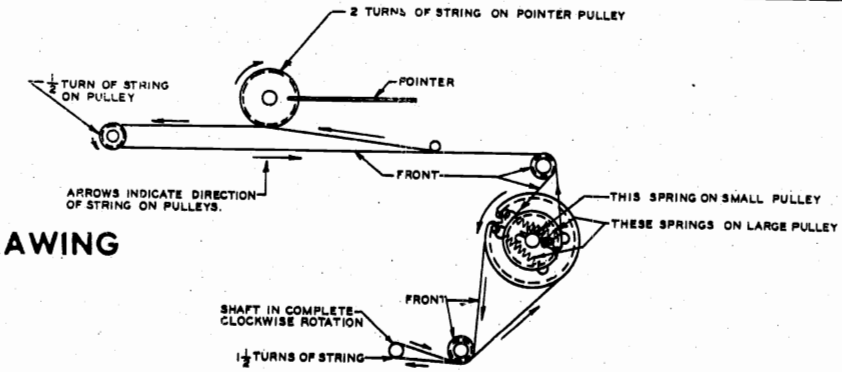

DIAL CORD DRIVE

©John F. Rider

Compliments of www.nucow.com

MODEL G503, Ch. 5G41

PARTS LIST

Part No.	Ref. No.	Description	
		DIAL ASSEMBLY	
12-1554		Tuning Shaft Bracket	
26-420		Dial Scale	
57-1630		Escutcheon (Y Model only)	
57-1631		Escutcheon	
57-1632		Emblem Plate	
57-1633		Emblem Plate (Y Model only)	
57-1634		Trim Plate	
59-225		Dial Pointer	
76-540		Tuning Shaft	
80-209		Dial Cord Tension Spring	
93-978		Felt Washer (2 used)	
188-32		Retaining Ring (used on 76-540)	
S-15430		Pointer & Pulley Assembly	
S-15440		Dial Cord Assembly (Short)	
S-16106		Dial Cord Assembly (Long)	
		COILS & CHOKES	
95-1132	T1	1st IF Transformer	
95-1133	T2	2nd IF Transformer	
S-15811	L2	Detector Coil Assembly	
S-15812	L3	Oscillator Coil Assembly	
		CONDENSERS	
22-3	C6	.01 Mfd. Ceramic (Disc)	500V
22-182	C5	220 Mmfd. Mica (Molded)	500V
22-229	C13	.005 Mfd.	600V
22-319	C8	.005 Mfd.	200V
22-492	C10	.002 Mfd.	600V
22-827	C9	.1 Mfd.	200V
22-829	C19	.05 Mfd.	200V
22-1017	C14	.05 Mfd.	400V
22-1386	C11	.02 Mfd.	200V
22-1669	C12	100 Mmfd. Ceramic	500V
22-1741	C15, 16, 17, 18	Four Section Elect. Cond.	
22-2070	C1	Three Section Gang Cond.	
		RESISTORS	
63-1362	R18, 19	Two Section Candohm	
63-1757	R10	220 Ohm 1/2W 10% Ins. Res.	
63-1778	R12	680 Ohm 1/2W 10% Ins. Res.	
63-1758	R4	220 Ohm 1/2W 20% Ins. Res.	
63-1786	R5	1000 Ohm 1/2W 20% Ins. Res.	
63-1834	R1	15K Ohm 1/2W 10% Ins. Res.	
63-1862	R17	68K Ohm 1/2W 10% Ins. Res.	
63-1880	R3	180K Ohm 1/2W 10% Ins. Res.	
63-1912	R2	1 Megohm 1/2W 20% Ins. Res.	
63-1933	R14	3.3 Megohm 1/2W 20% Ins. Res.	
63-1940	R15	4.7 Megohm 1/2W 20% Ins. Res.	
63-1943	R6	5.6 Megohm 1/2W 10% Ins. Res.	
63-1954	R9	10 Megohm 1/2W 20% Ins. Res.	
63-1961	R8	15 Megohm 1/2W 20% Ins. Res.	
63-2013	R11	Volume Control 1.0 Meg.	
63-2018	R16	130 Ohm Zipohm 3W 10% Ins. Res.	
		MISCELLANEOUS	
11-104		Line Cord & Plug Assembly	
12-1733		Chassis Mtg. Brkt.	
14-1230		Plastic Cabinet for G503	
14-1231		Plastic Cabinet for G503Y	
15-51		Cable Socket Cap & Insulator	
19-185		Speaker Baffle Retaining Clip (2 used)	
24-482		On-Off Switch Cover	
24-543		Front Door (Y model only)	
24-544		Front Door	

Part No.	Ref. No.	Description
		MISCELLANEOUS (Continued)
36-42		Cabinet Handle (Y model only)
36-43		Cabinet Handle
46-785		Tuning & Vol. Control Knob (2 used)
49-658	SP-1	4" PM Speaker 208-658 Cone & Voice Coil 206-658 Output Trans.
54-34		#6-32 x 1/4" x 3/32 Hex. Nut Steel NP (Used on 212-10)
54-139		#3/8-32 x 9/16" Palnut Type 9N Cad. Pl. (used on 63-2013)
93-1004		Fibre Spacer Washer (2 used on ea. S-16711 & S-15977)
94-295		Gang Cond. Mtg. Bushing (3 used)
97-367		Handle Mtg. Stud
112-800		#2 x 1/4" Phill. R.H.S.T. Screw Brass Plate (2 used on 57-1632)
113-18		#6-32 x 5/16" Hex. Hd. Sl. M.S. Cad. Pl. (2 used on 85-450)
114-26		#8 x 1/4" Hex. Hd. S.T. Screw Cad. Pl. (4 used on 57-1480)
114-295		#8 x 5/16" Hex. Hd. Sl. S.T. Screw Shakeproof Cad. Pl. (4 used chassis mtg.)
114-311		#6-32 x 1" Hex. Hd. Sl. M.S. Steel (used on 212-10)
138-36		Cabinet Grille
147-166		Speaker Mtg. Spacer (2 used)
156-41		Door Latch
166-44		Rubber Bumper (Speaker & Gang)
192-132		Dial Glass
202-804		Instruction Book
212-10	SE-1	Selenium Rectifier
S-15433		Support Brkt. & Idler Pulley Assy.
S-15434		Wavemagnet Assembly
S-15438		Battery Cable & Socket Assy.
S-15977		Wavemagnet, Pulley & Sleeve Assy. (Y model only)
S-16710		Speaker Baffle & Grill Cloth Assy.
S-16711		Wavemagnet Pulley & Sleeve Assy.
Z909		Battery
54-267		#6-32 x 5/16" Palnut Cad. Pl. (1 ea. used on 95-1132 & 95-1133)
54-282		Spring Nut Cad. Pl. (1 each used on 26-420 & S-16711)
54-283		Spring Nut Black Oxide (used on S-16711)
54-284		Wavemagnet Lead Retaining Nut (2 used)
54-307		Spring Nut (7 used on Esc. Mtg.)
57-1480		Chassis Bottom Cover Plate
57-1491		Latch Plate
61-71		Idler Pulley (4 used)
61-133		Pointer Pulley
61-136		Idler Pulley
64-290		Shoulder Rivet (used on 61-71)
64-303		Shoulder Rivet (used on S-15433)
70-158		#2 x 3/8" Phill. Oval Hd. W.S. Steel Black Oxide (3 used on Esc. Mtg.)
70-159		#5 x 7/16 Phill. R.H. W.S. Steel N.P. (2 used on each 12-1433)
78-274		Elect. Cond. Socket
78-543		Battery Cable Socket (4 contact)
78-782		Miniature Tube Socket
78-806		Miniature Tube Socket
78-807		Miniature Tube Socket
80-742		Door Catch Spring
80-799		Latch Spring
85-450	S1	Power Change Over Switch
85-451	S2	On-Off Switch
93-869		#6 Split Lockwasher (used on 212-10)
93-1003		Brass Spacer Washer (used on S-16711 & S-15977)

© John F. Rider

Compliments of www.nucow.com

MODEL G516,
Ch. 5G03

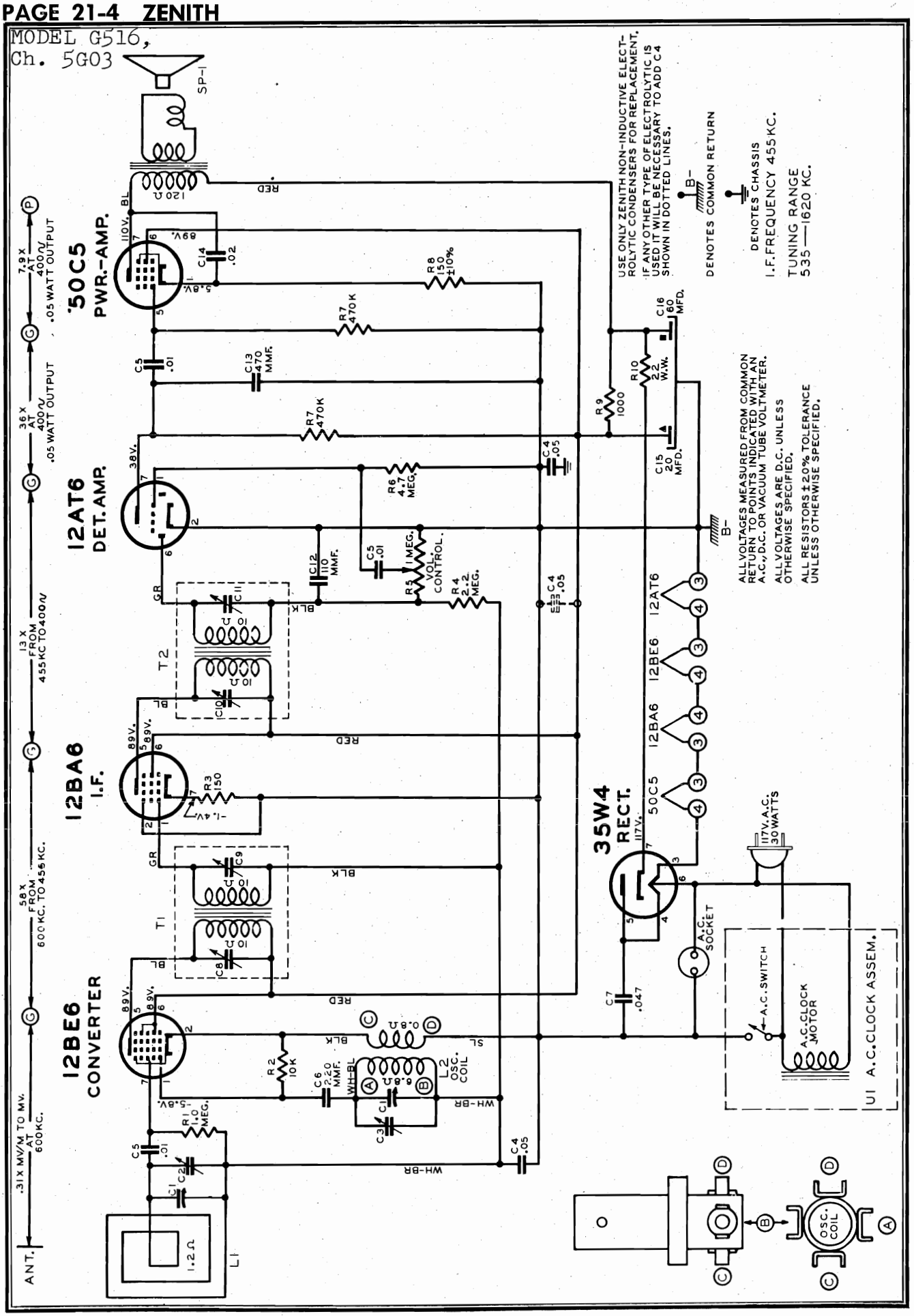

©John F. Rider

Compliments of www.nucow.com

MODEL G516,
Ch. 5G03

PARTS LIST

DIAL ASSEMBLY

26-444	Dial Scale
46-854	Volume Control Knob
46-856	Tuning Control Knob
46-861	Volume Control Knob (W & Y Model)
46-862	Tuning Control Knob (W & Y Model)
59-244	Dial Pointer
59-246	Dial Pointer (W & Y Model)
80-402	Dial Cord Tension Spring
80-746	Pointer Pulley Retaining Spring
S-16689	Pointer Pulley & Shaft Assembly
S-16696	Pulley Mtg. Strip & Bushing Assembly
S-16697	Dial Cord Assembly
S-16728 U1	Clock & Timer Assembly (Complete)
S-16774 U1	Clock & Timer Assembly (W Model) Complete
S-16775 U1	Clock & Timer Assembly (Y Model) Complete

COILS & CHOKES

95-1230 T1	1st. I. F. Transformer
95-1231 T2	2nd. I. F. Transformer
S-16681 L2	Osc. Coil Assembly

CONDENSERS

22-3	4C5	.01 Mfd. Ceramic (3 used)	500V
22-5	C12	110 Mmfd. Ceramic (or 22-162)	500V
22-6	C13	470 Mmfd. Ceramic (or 22-1196)	500V
22-182	C6	220 Mmfd. Molded Mica	500V
22-829	C4	.05 Mfd. (2 used)	200V
22-1017	C7	.05 Mfd.	400V
22-1379	C14	.02 Mfd.	400V
22-2202	C15, C16	Elect. 20-60 Mfd.	150V
22-2209	C1	Two Gang Variable	

RESISTORS

63-1219	R10	22 Ohm	W.W.	1/2W	20% Ins.
63-1574	R9	1000 Ohm		1W	20% Ins.
63-1751	R3	150 Ohm		1/2W	20% Ins.
63-1828	R2	10K Ohm		1/2W	20% Ins.
63-1898	R7	470K Ohm		1/2W	20% Ins.
63-1912	R1	1 Megohm		1/2W	20% Ins.
63-1926	R4	2.2	"	1/2W	20% Ins.
63-1940	R6	4.7	"	1/2W	20% Ins.
63-1977	R8	150 Ohm		1W	10% Ins.
63-2106	R5	Volume Control			

MISCELLANEOUS

11-85	Line Cord & Plug (6 ft.)
14-1234	Plastic Cabinet for G516
14-1237	Plastic Cabinet for G516 White
14-1238	Plastic Cabinet for G516 Black
16-603	Packing Carton
24-541	Volume Control Cover
49-680 SP-1	4" P. M. Speaker
	*208-680 Cone & Voice Coil
	*206-680 Output Transformer
54-139	3/8-32 x 9/16 Hex Palnut
54-227	#4-40 x 1/4 Hex Nut Steel (3 used to Mount Clock)
54-271	6-32 x 1/4 Hex Palnut Steel (2 used on each 95-1230)& 95-1231)
57-1613	Emblem Plate
78-275	Elect. Cond. Socket
78-781	Miniature Tube Socket (2 used)
78-782	Miniature Tube Socket (3 used)
78-840	Two Prong Socket (A.C.)
93-501	#4 Int. Shakeproof Lockwasher (3 used on Clock Mtg.)
94-334	Gang Mtg. Bushing (3 used)
110-150	Grill Cloth
113-15	6-32 x 5/16" Hex Hd. M.S. (3 used on Gang Cond. Mtg.)
114-253	#6 x 3/8 Hex Hd. Sl. S. T. (2 used Chassis Mtg.)
114-343	#8 x 1/2 Hex Hd. Sl. Washer Hd. S. T. (2 used Chassis Mtg.)
125-17	Rubber Grommet (3 used Gang Mtg.)
159-69	Trimount Stud (4 used Back Mtg.)
202-805	Instruction Book
S-16729 L1	Wavemagnet & Back Assem. (Walnut & Black Models)
S-16768	Clock Cover & Bushing (Rear)
S-16776	Wavemagnet & Back Assem. (White Models)
S-17001	Twisted Wire Cable Assembly

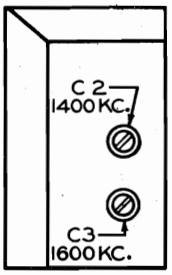

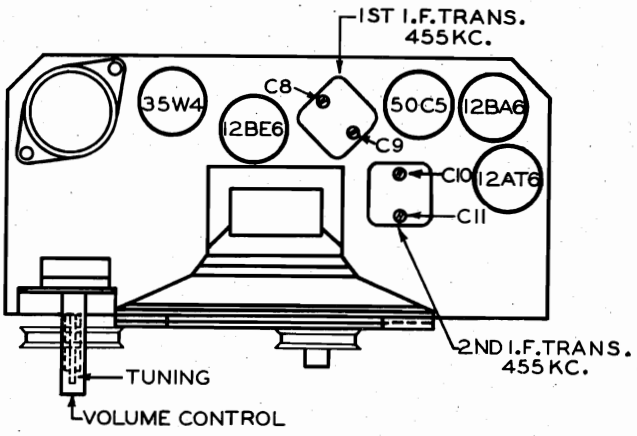

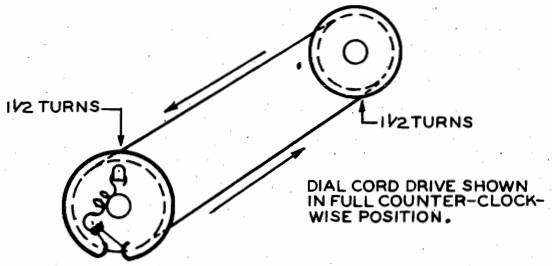

DIAL CORD DRIVE

Clock and Timer Note:

The clock and timer assemblies used in this receiver are manufactured by Telechron. Face parts, such as hands, knobs, scales, bezel, etc., are not available through local Telechron service depots. We suggest that all clock and timer assemblies complete (less the rear cover and bushing - S-16768) be returned to your local Zenith Distributor for repair or replacement. Be sure to pack all clock and timer assemblies individually and carefully to prevent damage in shipment.

To remove the clock from the cabinet proceed as follows:

1. Remove the three 6/32 hex nuts that fasten the rear clock cover to the clock.
2. Slide the rear clock cover off the time set control shaft and then slide this cover down over the three-wire cable that connects the clock to the receiver.
3. Next unsolder the three-wire cable from the clock motor and switch. Be certain not to tear out the solder terminals from the clock motor or switch.
4. The clock can then be removed from the front of the cabinet.

ALIGNMENT PROCEDURE

OPERATION	CONNECT OSCILLATOR TO	DUMMY ANTENNA	INPUT SIG. FREQUENCY	SET DIAL AT	TRIMMERS	PURPOSE
1	Converter Grid	.5 Mfd.	455 Kc.	600 Kc.	C8, C9, C10, C11	For I. F. Alignment
2	One Turn Loop Coupled Loosely to Wave Magnet	---	1600 Kc.	1600 Kc.	C-3	Set Oscillator to Dial Scale
3		---	1400 Kc.	1400 Kc.	C-2	Align Antenna Stage

©John F. Rider

Compliments of www.nucow.com

MODEL G723,
Ch. 7G04

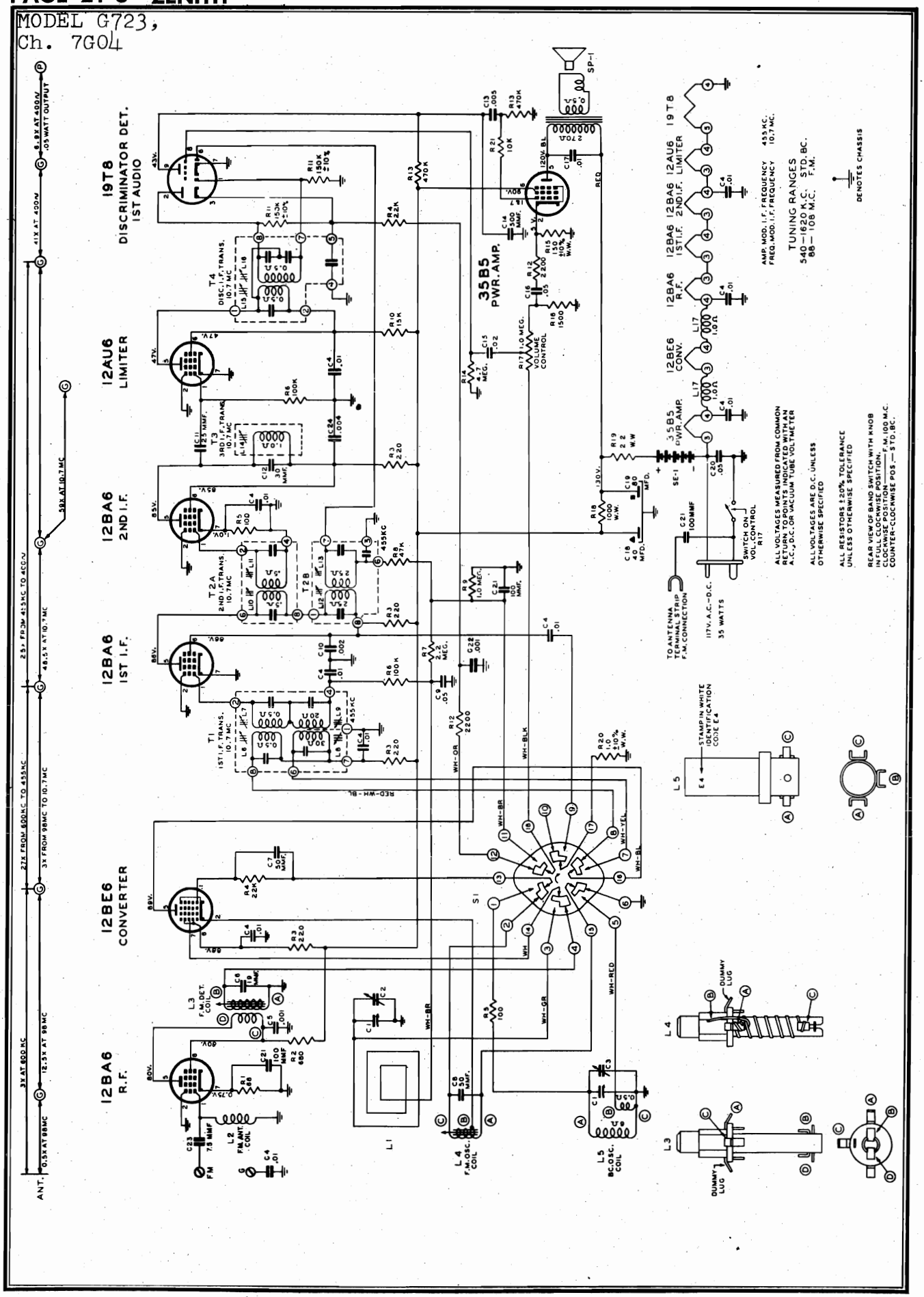

©John F. Rider

Compliments of www.nucow.com

The 7G04 chassis incorporates a superheterodyne circuit with two stages of IF, on the FM Band, and one stage on the AM Band. There is one stage of RF amplification on the FM Band.

When adjustments are made on the 7G04 or any AC-DC chassis, a line isolation transformer (110-V input to 110-V output) is recommended in order to avoid a "hot" chassis. If an isolation transformer is not available, check the AC voltage between chassis and bench ground, and if there is any indication of voltage, reverse the plug before handling the set.

FM-AM 1st IF Alignment: The alignment of the 1st IF transformer is conventional. The alignment slugs are threaded and screw into the coil forms. The slugs are slotted for a small size fiber screw driver. Do not press hard on the aligning tool or the threads in the coil forms will strip and adjustment will be impossible. The 2nd AM and FM IF transformers and the discriminator transformer are the new permeability tuned type. The advantage of an IF transformer of this type is its extreme stability under various humidity and temperature conditions. The upper coil is the secondary and the lower the primary. When adjusting these IF and discriminator transformers, tuning wrench 68-7 can be inserted into the top slug, rotated until maximum output is obtained and then dropped down to the lower slug and the same operation repeated. The tuning wrench is so designed that turning one slug does not affect the adjustment of the other.

FM RF Alignment: The tuning slugs are attached to threaded shafts and the slugs are varied in the field of the coils by turning the shafts clockwise or counter-clockwise. After adjustment the shafts must be secured with a drop of speaker cement.

FM IF Alignment: Because of the wide band pass, it is desirable to use a FM signal generator and a cathode ray oscilloscope when aligning the FM IF channel. The instruction book for the Zenith Model 800 Signal Generator (Form Z8001) covers complete FM alignment procedure. If visual alignment equipment is unavailable, reasonably accurate alignment can be made by following the procedure outlined in this service note.

FM Discriminator Alignment: When the secondary of the discriminator is aligned (operation 5) use sufficient signal input to get a good positive and negative indication before setting the slug for zero reading. A center zero indicating meter is recommended for this adjustment, but is not absolutely necessary. Reversing the leads of a non-zero center meter, or observing closely when the meter starts to go to the left (negative) of zero will give the same results.

Alignment of this chassis will, in most cases, be unnecessary unless an IF or RF transformer is replaced or the adjustments have been tampered with.

Correct alignment can only be made if the following procedure is followed:

A vacuum tube voltmeter with an isolation resistor of 2,000,000 ohms in series with the hot lead will serve for FM adjustments. This lead should be shielded.

An AC output meter connected across the primary or secondary of the output transformer will be satisfactory for all AM adjustments.

The signal generator output should be kept just high enough to get an indication on the meter.
(a) Vacuum Tube Voltmeter Lug 7 on discriminator transformer to chassis (half discriminator load).
(b) Vacuum Tube Voltmeter Lug 5 on discriminator transformer to chassis (full discriminator load).
(c) Vacuum Tube Voltmeter from Limiter Grid to Chassis.
(d) Loosen Slugs by applying a hot iron to the cement.

©John F. Rider

Compliments of www.nucow.com

TUBE AND TRIMMER LOCATION

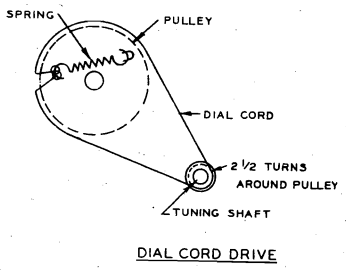

DIAL CORD DRIVE

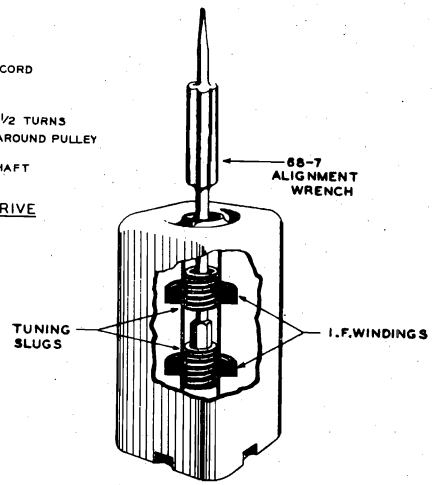

Detail of IF Transformer

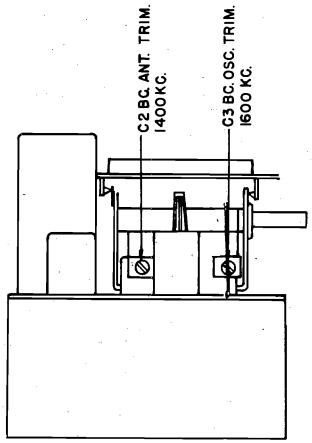

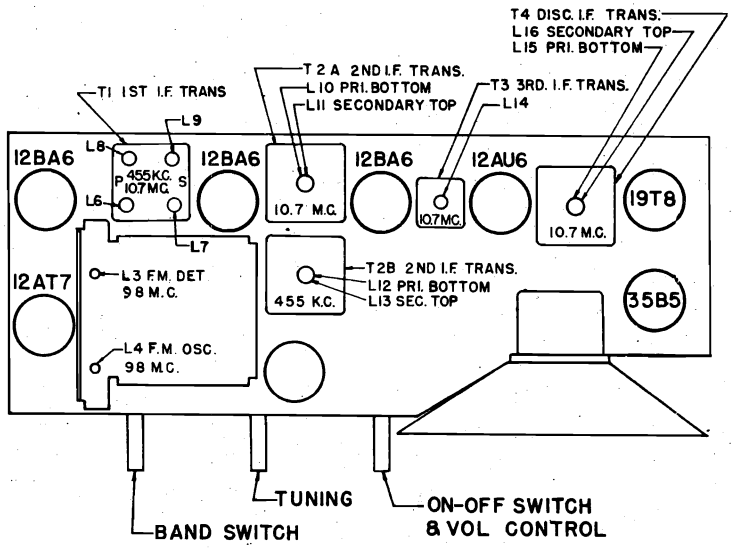

ALIGNMENT PROCEDURE

Operation	Connect Oscillator to	Dummy Antenna	Input Signal Frequency	Band	Set Dial To	Adj. Trimmers	Purpose
1	Pin 7 12BE6 Converter	.05 Mfd.	455 KC. Modulated	BC	600 Kc.	L8, 9, 12, 13	Align I. F. channel for maximum output.
2	2 turns loosely cpld. to wavemagnet		1600 Kc. Modulated	BC	1600 Kc.	C 3	Set oscillator to dial scale.
3	2 turns loosely cpld. to wavemagnet		1400 Kc. Modulated	BC	1400 Kc.	C 2	Align antenna stage.
4 (a)	Pin 1 (grid) on 12AU6 limiter.	.05 Mfd.	10.7 Mc. Unmodulated	FM 100		L15 coil slug Primary discr.	Align primary of discriminator for maximum reading.
5 (b)	Pin 1 (grid) on 12AU6 limiter.	.05 Mfd.	10.7 Mc. Unmodulated	FM 100		L16 coil slug sec. of discr.	Adjust secondary of discriminat-or for zero reading.
6 (c)	Pin 1 (grid) on 12BA6 2nd IF.	.05 Mfd.	10.7 Mc. Unmodulated	FM 100		L14 Prim. of 3rd IF trans.	Align 3rd IF transformer for maximum reading.
7 (c)	Pin 1 (grid) on 12BA6 1st IF.	.05 Mfd.	10.7 Mc. Unmodulated	FM 100		L10 and L11 Prim. and Sec. of 2nd IF transformer	Align 2nd IF transformer for maximum reading.
8 (c)	Pin 7 (grid) on 12BE6 converter tube socket.	.05 Mfd.	10.7 Mc. Unmodulated	FM 100		L6 and L7 Prim. and Sec. of 1st IF transformer.	Align 1st IF transformer for maximum reading.
9 (c)	Antenna Post FM (Re-move line ant.)	270 ohms	98 Mc. Unmodulated	FM 100	98 Mc.	L4 Osc. Coil Slug	Set Oscillator to dial scale.
10 (c) (d)		270 ohms	98 Mc. Unmodulated	FM 100	98 Mc.	L3 Det. Coil Slug	Align det. stage to maximum reading.

©John F. Rider

Compliments of www.nucow.com

PARTS LIST

MODEL G723, Ch. 7G04

DIAL ASSEMBLY

PART NO.	DESCRIPTION
26-443	Dial Scale
46-859	Band Switch Knob
46-860	Tuning & Volume Control Knob (2 used)
59-243	Dial Pointer
80-402	Dial Cord Tension Spring
80-444	Tuner Arm Tension Spring
80-580	Tuner Arm Stop Spring
80-817	Tuner Spring
80-818	Tuner Arm Pressure Spring
93-910	Felt Washer - Brown (2 used on 46-860 & 1 used on 46-859)
93-956	1/16" x 9/32" x 3/4" Black Felt Washer (Used on 59-243)
188-32	Retaining Ring (Used on S-16885)
199-35	Dial Scale Spacer Sleeve
S-14523	Tuning Shaft Brkt: & Insulating Strip Assem.
S-14524	Condenser Pulley & Cam Assembly
S-14525	Tuner Arm Assembly
S-16885	Tuning Shaft & Pulley Assembly
S-16888	Dial Cord & Eyelet Assembly

COILS & CHOKES

95-1102	2nd. I. F. Transformer
95-1150	2nd. I. F. Transformer
95-1153	Discriminator Transformer
S-13871	F. M. Detector Coil Assembly
S-13997	Filament Choke Assembly (2 used)
S-14481	Broadcast Osc. Coil Assembly
S-14509	3rd. I. F. Coil Assembly
S-14521	1st. I. F. Transformer Assembly
S-14695	F. M. Osc. Coil Assembly
S-15690	F. M. Antenna Coil Assembly

CONDENSERS

22-3	.01	Mfd.	Ceramic (10 used)	500V
22-229	.005	"		600V
22-448	.004	"		600V
22-829	.05	"		200V
22-830	.02	"		600V
22-854	500	Mmfd.		600V
22-887	.001	Mfd.		600V
22-1017	.05	"		400V
22-1126	.01	"		400V
22-1158	.05	"		200V
22-1220	.002	"		600V
22-1492	50	Mmfd.	Ceramic	500V
22-1507	25	"	"	500V
22-1511	50	"	"	500V
22-1669	100	"	"(or 22-5) (3 used)	500V
22-1676	.001	Mfd.	Ceramic	500V
22-1688	19	Mmfd.	"	500V
22-1742	Two Section Variable			
22-1757	Elect. Cond. 80-40 Mfd. - 150V			
22-1768	30	Mmfd.	Ceramic	500V
22-1852	7.5	"	"	500V

RESISTORS

PART NO.	DESCRIPTION				
63-686	150 Ohm	W.W.	1/2W	10%	Ins. Res.
63-1223	1.0 "	W.W.	"	"	" "
63-1450	22 "	W.W.	1W	20%	" "
63-1527	1000 "	W.W.	3W	"	" "
63-1737	68 "		1/2W	"	" "
63-1744	100 "		"	"	" "(2 used)
63-1758	220 "		"	"	" "(4 used)
63-1779	680 "		"	"	" "
63-1793	1500 "		"	"	" "
63-1800	2200 "		"	"	" "(2 used)
63-1828	10K "		"	"	" "
63-1835	15K "		"	"	" "
63-1842	22K "		"	"	" "(2 used)
63-1856	47K "		"	"	" "
63-1870	100K "		"	"	" "(2 used)
63-1876	150K "		"	10%	" "(2 used)
63-1898	470K "		"	20%	" "(2 used)
63-1912	1 Megohm		"	"	" "
63-1926	2.2 "		"	"	" "
63-1940	4.7 "		"	"	" "
63-2113	Volume Control & Switch				

MISCELLANEOUS

12-1070	Wavemagnet Mounting Bracket
14-1232	Plastic Cabinet for G723
49-667	4" P.M. Speaker 208-667 Cone & Voice Coil 206-667 Output Transformer
54-139	3/8-32 x 9/16" Palnut (1 ea. used 85-481 & 63-2113)
54-226	Speed Nut Tinnerman (1 ea. used S-13871 & S-14695)
54-267	#6-32 x 5/16" Palnut (Used on 26-443)
54-269	#8-32 x 11/32" Palnut Steel Cad. (Used on S-14521)
54-271	6-32 x 1/4" Palnut (5 used on I.F's.)
57-1269	I. F. Transformer Terminal Plate (2 used)
57-1613	Cabinet Emblem Plate
58-128	Two Prong Plug
73-131	#6-32 x 3/8" Slab Hd. Set Screw Cuppoint (2 used on Gang)
78-788	Miniature Tube Socket
78-806	Miniature Tube Socket
78-807	Miniature Tube Socket (5 used)
83-1056	Wavemagnet Mounting Strip
83-1090	Insulating Strip
83-1520	Rectifier Insulating Strip
83-1736	Felt Strip (2 used)
83-1773	Insulating Strip (3 hole strip over controls)
85-481	Band Switch
93-35	.032 x .144 x 3/8" Steel Washer N.P. (2 used on 26-443 & 49-667)
94-613	Iron Core Insulating Bushing (2 used)
97-293	Chassis Mounting Stud (2 used)
112-281	#10 x 3/4" Oval Bind Hd. S.T. Stat. Bronze (2 used on Chassis Mtg.)
114-293	#6-32 x 3/8" Hex Hd. Sl. M.S. Steel (3 used)
114-340	#6 x 1-1/8" Hex Hd. Sl. S.T. (used on 212-7)
139-79	Speaker Baffle
149-64	Iron Core & Spring (2 used)
149-65	Iron Core & Screw
159-50	Cinch Plug Button Black Ox. (4 used on 192-117)
159-69	Plug Button Stat. Bronze (4 used on S-14549)
192-117	Dial Glass
196-111	Speaker Gasket
202-697	F. M. Instruction Book
202-808	Instruction Book
212-7	Selenium Rectifier
S-14527	Wavemagnet Lead & Stop Assembly
S-14549	Cabinet Back Assembly (Complete)
S-14957	Wavemagnet Assembly
S-15739	Speaker Support Bracket & Plate Assembly

©John F. Rider

Compliments of www.nucow.com

MODEL G724,
Ch. 7G02

PARTS LIST

DIAL ASSEMBLY

12-1546		Indicator Socket Brkt.
26-442		Dial Scale
46-780		Tone Control Knob
46-811		Tuning & Vol. Control Knob (2 Used)
46-844		Band Switch Knob
59-243		Dial Pointer
78-585		Indicator Socket
80-402		Dial Cord Tension Spring
80-444		Tuner Arm Tension Spring
80-580		Tuner Arm Stop Spring
80-817		Tuner Spring
80-818		Tuner Arm Pressure Spring
93-774		Felt Washer - Brown (1 Used 46-844 & 2 Used 46-811)
93-956		1/16 X 9/32 X 3/4" Black Felt Washer (Used on 59-243)
100-105	PL-1	Neon Indicator Bulb
114-51		#6-32 X 1/2" Hex Sl. Hd. M.S. Steel N.P. (1 ea. used on 12-1546 & 26-442)
188-32		Retaining Ring (Used on S-16885)
199-35		Dial Scale Spacer Sleeve
S-14523		Tuning Shaft Brkt. & Insulating Strip Assem.
S-14524		Condenser Pulley & Cam Assem.
S-14525		Tuner Arm Assem.
S-16885		Tuning Shaft & Pulley Assem.
S-16888		Dial Cord & Eyelet Assem.

COILS & CHOKES

95-1102	T2B	2nd I.F. Trans. (Broadcast)
95-1150	T2A	2nd I.F. Trans. (F.M.)
95-1153	T4	Discriminator Trans.
S-13871	L3	F.M. Detector Coil Assem.
S-14509	L14	3rd I.F. Coil Assem.
S-15690	L2	F.M. Antenna Coil Assem.
S-15694	L5	Broadcast Osc. Coil Assem.
S-15695	T1	1st. I.F. Trans. Assem.
S-15733	L4	F.M. Oscillator Coil Assem.

CONDENSERS

22-3	C4	.01 Mfd. Ceramic (9 Used)	500V
22-5	C12	110 Mmfd. Ceramic (3 Used) (Or 22-1669)	500V
22-229	C18	.005 Mfd.	600V
22-448	C25	.004 Mfd.	600V
22-829	C10	.05 Mfd.	200V
22-830	C16	.02 Mfd.	600V
22-854	C17	500 Mmfd.	600V
22-887	C15	.001 Mfd.	600V
22-1017	C24	.05 Mfd.	400V
22-1025	C21	.15 Mfd.	200V
22-1126	C19	.01 Mfd.	400V
22-1158	C20	.05 Mfd.	200V
22-1220	C11	.002 Mfd.	600V
22-1367	C9	50 Mmfd.	500V
22-1506	C7	22 Mmfd. Ceramic (2 Used)	500V
22-1507	C13	25 Mmfd. Ceramic	500V
22-1676	C5	.001 Mfd. Ceramic (2 Used)	500V
22-1752	C1	Two Section Variable	
22-1757	C22-C23	Elect. Cond. 80-40 Mfd.	150V
22-1766	C8	.68 Mmfd. Ceramic	500V
22-1768	C14	30 Mmfd. Ceramic	500V
22-1852	C26	7.5 Mmfd. Ceramic	500V

RESISTORS

63-686	R15	150 Ohm W.W. 1/2W 10% Ins. Res.
63-1223	R8	1.0 Ohm W.W. 1/2W 10% Ins. Res.
63-1450	R20	22 Ohm W.W. 1W 20% Ins. Res.
63-1527	R19	1000 Ohm W.W. 3W 20% Ins. Res.
63-1737	R1	68 Ohm 1/2W 20% Ins. Res.
63-1744	R3	100 Ohm 1/2W 20% Ins. Res. (2 Used)
63-1758	R2	220 Ohm 1/2W 20% Ins. Res. (5 Used)
63-1782	R17	820 Ohm 1/2W 10% Ins. Res.
63-1800	R4	2200 Ohm 1/2 20% Ins. Res. (3 Used
63-1828	R5	10K Ohm 1/2W 20% Ins. Res.
63-1835	R11	15K Ohm 1/2W 20% Ins. Res.
63-1856	R9	47K Ohm 1/2W 20% Ins. Res.
63-1870	R6	100K Ohm 1/2W 20% Ins. Res. (2 Used)
63-1876	R12	150K Ohm 1/2W 10% Ins. Res. (2 Used)
63-1884	R21	220K Ohm 1/2W 20% Ins. Res.
63-1898	R14	470K Ohm 1/2W 20% Ins. Res. (2 Used)
63-1912	R10	1 Megohm 1/2W 20% Ins. Res.
63-1926	R7	2.2 Megohm 1/2W 20% Ins. Res.
63-1940	R13	4.7 Megohm 1/2W 20% Ins. Res. (3 Used)
63-2008	R16	Tone Control
63-2113	R18	Volume Control & Switch

MISCELLANEOUS

12-1070		Wavemagnet Mtg. Brkt.
14-1233		Plastic Cabinet for G724
43-165		Handle Housing
49-634	SP-1	5-1/4" P.M. Speaker 208-634 Cone & Voice Coil 206-634 Output Trans.
54-139		3/8-32 X 9/16" Palnut (1 Ea. Used on 63-2113 & 85-481)
54-226		Speed Nut (1 Ea. Used on S-13871 & S-15733)
54-267		#6-32 X 5/16" Palnut - Steel Cad. (7 Used)
54-269		#8-32 X 11/32" Palnut - Steel Cad. (Used on S-15695)
54-305		3/8-32 X 9/16 Palnut - Steel Stat. Bronze
57-1269		I.F. Trans. Terminal Plate (2 Used)
57-1613		Cabinet Emblem Plate
58-128		Two Prong Plug
73-131		#6-32 X 3/8" Slab. Hd. Set Screw (2 Used on Gang)
78-806		Miniature Tube Socket
78-807		Miniature Tube Socket (4 Used)
78-850		Miniature Tube Socket (9 Contact)
78-868		Miniature Tube Socket (9 Contact)
83-1056		Wavemagnet Mtg. Strip
83-1090		Insulating Strip
83-1393		Rubber Strip (Handle)
83-1520		Rectifier Insulating Strip
83-1736		Felt Strip (2 Used)
83-1773		Insulating Strip (3 Hole Strip over Controls)
85-481	S-1	Band Switch
93-35		.032 X .144 X 3/8 Steel Washer (2 Used on 26-442)
93-125		#6 Int. Shakeproof Lockwasher (5 Used on Gang)
93-487		1/16 X .144 X 3/8" Steel Washer (2 Used on 43-165)
93-719		031 X 3/16 X 7/16" Steel Washer (Used on 26-442)

©John F. Rider

Compliments of www.nucow.com

MODEL G724,
Ch. 7G02

PARTS LIST CONT'D

93-729		032 X .187 X 5/8" Steel Washer (Used on 26-442)
94-613		Iron Core Insulating Bushing (2 Used)
97-293		Chassis Mtg. Stud (2 Used)
112-281		#10 X 3/4" Oval Binding Hd. S.T. Screw Type Z Stat. Br. (2 Used Chassis Mtg.)
114-340		#6 X 1-1/2" Hex Hd. Sl. S.T. (Used on 212-7)
126-618		Tube Shield
149-64		Iron Core & Spring (2 Used)
149-65		Iron Core & Screw
159-50		Plug Button - Stat. Bronze (4 Used on 192-117)
159-69		Plug Button - Stat. Bronze (4 Used on S-14549)
192-117		Dial Glass
196-111		Speaker Gasket
199-103		Flexible Handle Sleeve
202-697		F.M. Instruction Book
202-809		Instruction Book
212-7	SE-1	Selenium Rectifier
S-13210		Strip & Rivet Assem. (Handle)
S-14527		Wavemagnet Lead & Stop Assem.
S-14549		Cabinet Back Assem. (Complete)
S-14957	L1	Wavemagnet Assem.

The 7G02 chassis incorporates a superheterodyne circuit with two stages of IF, on the FM Band, and one stage on the AM Band. There is one stage of RF amplification on the FM Band.

When adjustments are made on the 7G02 or any AC-DC chassis, a line isolation transformer (110-V input to 110-V output) is recommended in order to avoid a "hot" chassis. If an isolation transformer is not available, check the AC voltage between chassis and bench ground, and if there is any indication of voltage, reverse the plug before handling the set.

FM-AM 1st IF Alignment: The alignment of the 1st IF transformer is conventional. The alignment slugs are threaded and screw into the coil forms. The slugs are slotted for a small size fiber screw driver. Do not press hard on the aligning tool or the threads in the coil forms will strip and adjustment will be impossible. The 2nd AM and FM IF transformers and the discriminator transformer are the new permeability tuned type. The advantage of an IF transformer of this type is its extreme stability under various humidity and temperature conditions. The upper coil is the secondary and the lower the primary. When adjusting these IF and discriminator transformers, tuning wrench 68-7 can be inserted into the top slug, rotated until maximum output is obtained and then dropped down to the lower slug and the same operation repeated. The tuning wrench is so designed that turning one slug does not affect the adjustment of the other.

FM RF Alignment: The tuning slugs are attached to threaded shafts and the slugs are varied in the field of the coils by turning the shafts clockwise or counter-clockwise. After adjustment the shafts must be secured with a drop of speaker cement.

FM IF Alignment: Because of the wide band pass, it is desirable to use a FM signal generator and a cathode ray oscilloscope when aligning the FM IF channel. The instruction book for the Zenith Model 800 Signal Generator (Form Z8001) covers complete FM alignment procedure. If visual alignment equipment is unavailable, reasonably accurate alignment can be made by following the procedure outlined in this service note.

FM Discriminator Alignment: When the secondary of the discriminator is aligned (operation 5) use sufficient signal input to get a good positive and negative indication before setting the slug for zero reading. A center zero indicating meter is recommended for this adjustment, but is not absolutely necessary. Reversing the leads of a non-zero center meter, or observing closely when the meter starts to go to the left (negative) of zero will give the same results.

Alignment of this chassis will, in most cases, be unnecessary unless an IF or RF transformer is replaced or the adjustments have been tampered with.

Correct alignment can only be made if the following procedure is followed:

A vacuum tube voltmeter with an isolation resistor of 2,000,000 ohms in series with the hot lead will serve for FM adjustments. This lead should be shielded.

An AC output meter connected across the primary or secondary of the output transformer will be satisfactory for all AM adjustments.

The signal generator output should be kept just high enough to get an indication on the meter.

(a) Vacuum Tube Voltmeter Lug 7 on discriminator transformer to chassis (half discriminator load).
(b) Vacuum Tube Voltmeter Lug 5 on discriminator transformer to chassis (full discriminator load).

(c) Vacuum Tube Voltmeter from Limiter Grid to Chassis.
(d) Loosen Slugs by applying a hot iron to the cement.

©John F. Rider

Compliments of www.nucow.com

TUBE AND TRIMMER LOCATION

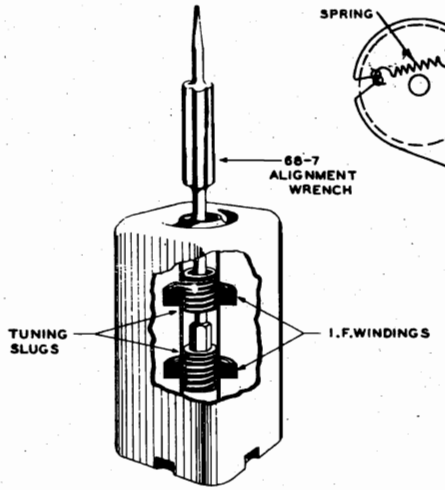

Detail of I F Transformer

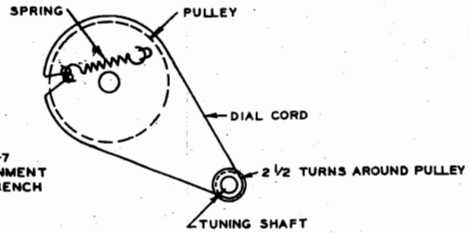

DIAL CORD DRIVE

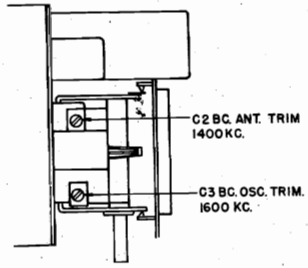

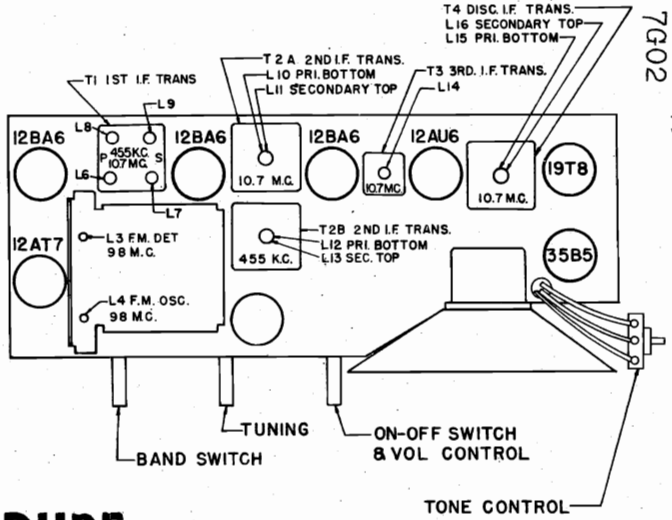

ALIGNMENT PROCEDURE

Operation	Connect Oscillator To	Dummy Antenna	Input Signal Frequency	Band	Set Dial To	Adj. Trimmers	Purpose
1	Pin 2 12AT7 Converter	.05 Mfd.	455 Kc. Modulated	BC	600 Kc.	L8, 9, 12, 13	Align I.F. channel for maximum output.
2	2 turns loosely cpld. to wavemagnet		1600 Kc. Modulated	BC	1600 Kc.	C3	Set oscillator to dial scale.
3	2 turns loosely cpld. to wavemagnet		1400 Kc. Modulated	BC	1400 Kc.	C2	Align antenna stage.
4 (a)	Pin 1 (grid) on 12AU6 limiter.	.05 Mfd.	10.7 Mc. Unmodulated	FM 100		L15 coil slug Primary discr.	Align primary of discriminator for maximum reading.
5 (b)	Pin 1 (grid) on 12AU6 limiter.	.05 Mfd.	10.7 Mc. Unmodulated	FM 100		L16 coil slug sec. of discr.	Adjust secondary of discriminator for zero reading.
6 (c)	Pin 1 (grid) on 12BA6 2nd. IF.	.05 Mfd.	10.7 Mc. Unmodulated	FM 100		L14 Prim. of 3rd IF trans.	Align 3rd. IF transformer for maximum reading.
7 (c)	Pin 1 (grid) on 12BA6 1st. IF.	.05 Mfd.	10.7 Mc. Unmodulated	FM 100		L10 and L11 Prim. and Sec. of 2nd. IF transformer	Align 2nd IF transformer for maximum reading
8 (c)	Pin 2 (grid) on 12AT7 converter tube socket	.05 Mfd.	10.7 Mc. Unmodulated	FM 100		L6 and L7 Prim. and Sec. of 1st. IF transformer	Align 1st. IF transformer for maximum reading.
9 (c)	Antenna Post FM (Remove line ant.)	270 ohms	98 Mc. Unmodulated	FM 100	98 Mc.	L4 Osc. Coil Slug	Set Oscillator to dial scale.
10 (c) (d)		270 ohms	98 Mc. Unmodulated	FM 100	98 Mc.	L3 Det. Coil Slug	Align det. stage to maximum reading.

©John F. Rider
Compliments of www.nucow.com

MODEL G724,
Ch. 7G02

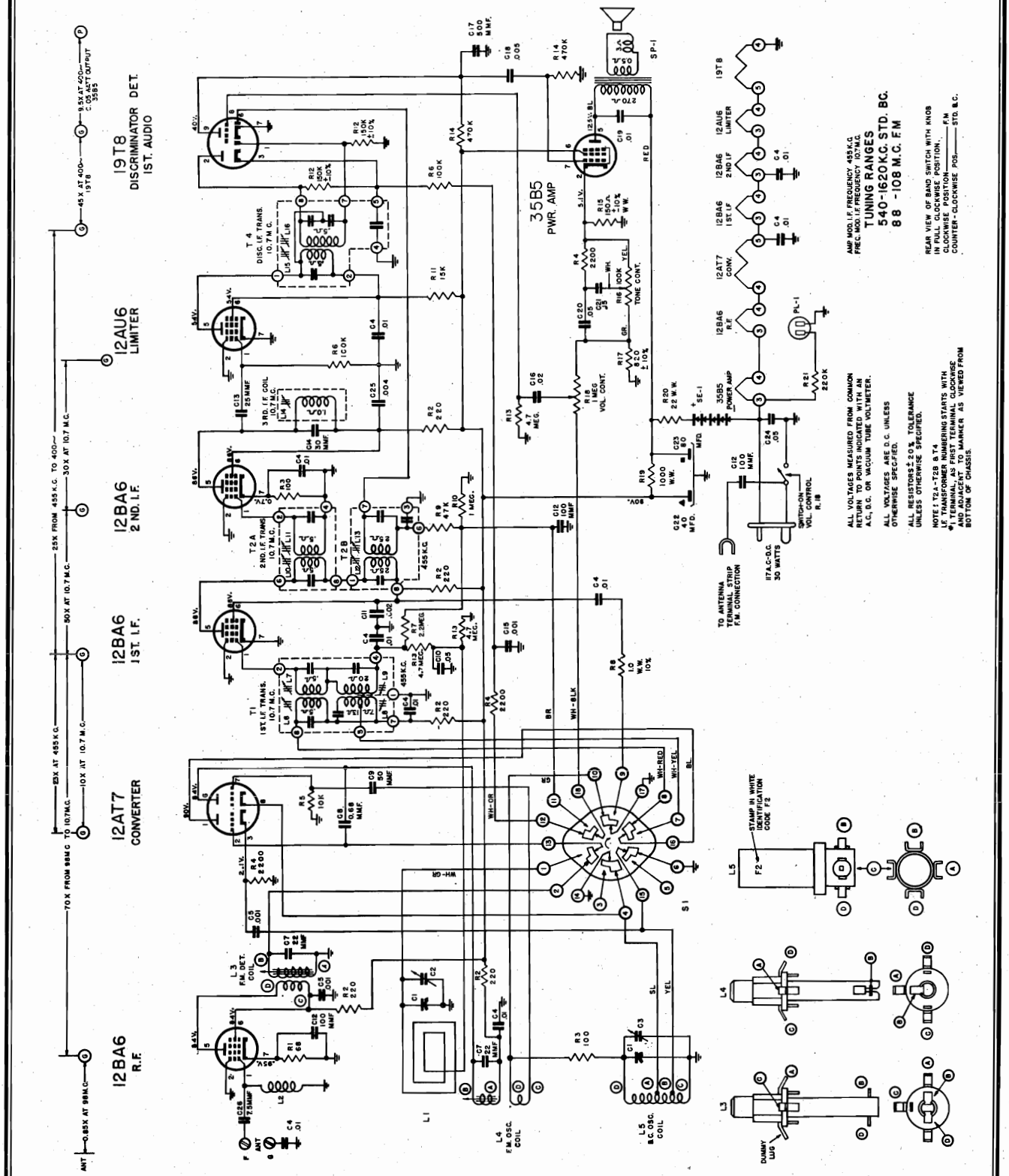

©John F. Rider

Compliments of www.nucow.com

MODEL G725,
Ch. 7G01

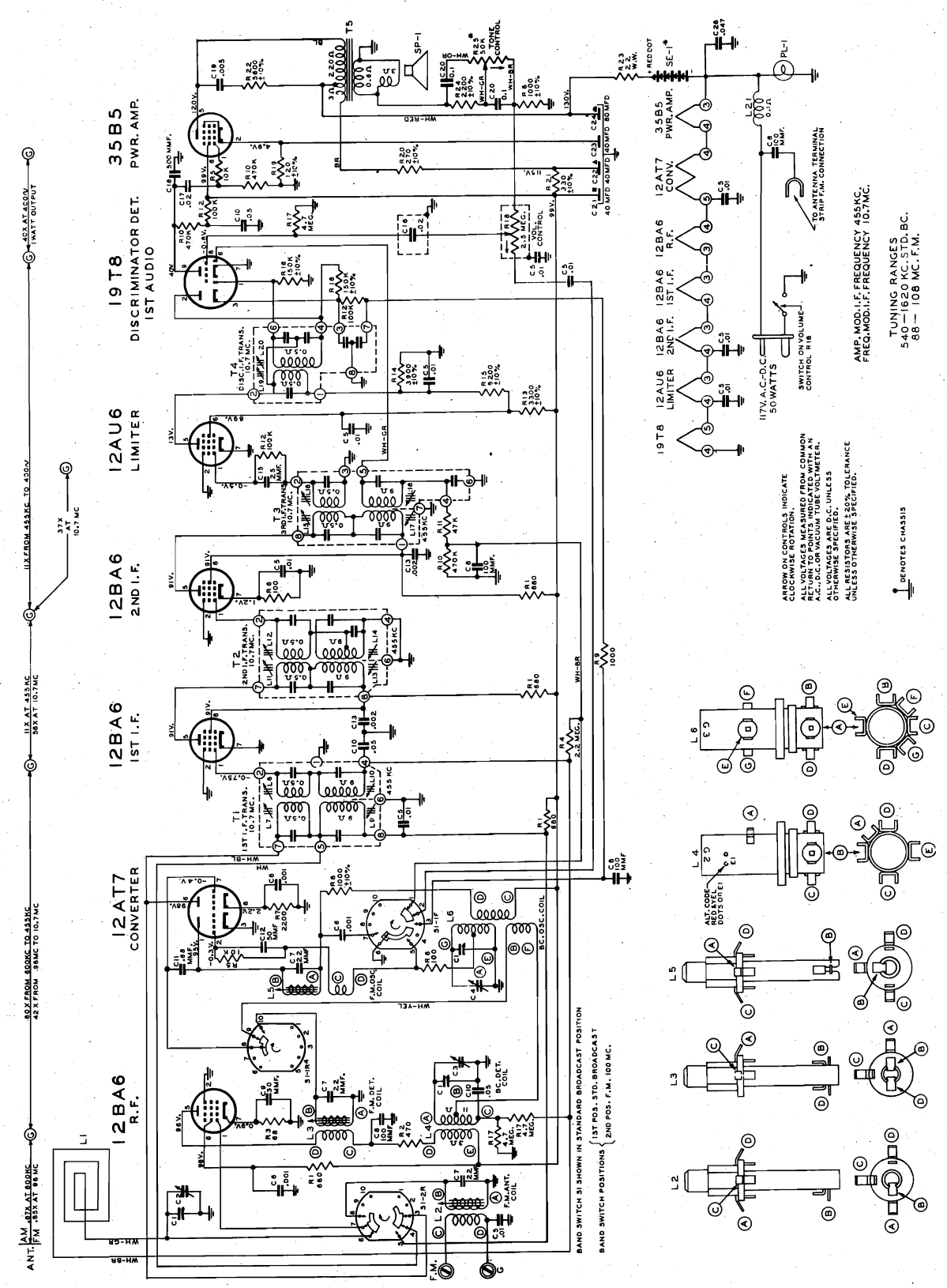

©John F. Rider

Compliments of www.nucow.com

The 7G01 chassis incorporates a superheterodyne circuit with two stages of IF, and one stage of RF amplification on all bands.

When adjustments are made on the 7G01 or any AC-DC chassis, a line isolation transformer (110 V input to 110 V output) is recommended in order to avoid a "hot" chassis. If an isolation transformer is not available, check the AC voltage between chassis and bench ground, and if there is any indication of voltage, reverse the plug before handling the set.

AM Alignment: The alignment of this chassis on the standard broadcast band is conventional. The alignment slugs in the IF transformers are threaded and screw into the coil forms. The slugs are slotted for a small size fiber screw driver. Do not press hard on the aligning tool or the threads in the coil forms will strip and adjustments will be impossible.

FM RF Alignment: The tuning slugs are attached to threaded shafts and the slugs are varied in the field of the coils by turning the shafts clockwise or counter-clockwise. After adjustment the shafts must be secured with a drop of speaker cement.

FM IF Alignment: The same type of tuning slugs for aligning the AM IF Amplifier are used for the FM I.F.'s. Observe the same precautions when making adjustments.

FM Discriminator Alignment: When the secondary of the discriminator is aligned (operation 5) use sufficient signal input to get a good positive and negative indication before setting the slug for zero reading. A center zero indicating meter is recommended for this adjustment, but is not absolutely necessary. Reversing the leads of a non-zero center meter, or observing closely when the meter starts to go to the left (negative) of zero will give the same results.

Alignment of this chassis will in most cases be unnecessary unless an IF or RF transformer is replaced or the adjustments have been tampered with.

Correct alignment can only be made if the following procedure is followed:

A vacuum tube voltmeter with an isolation resistor of 2,000,000 ohms in series with the hot lead will serve for FM adjustments. This lead should be shielded.

An AC output meter connected across the primary or secondary of the output transformer will be satisfactory for all AM adjustments.

The signal generator output should be kept just high enough to get an indication on the meter.

(a) Vacuum Tube Voltmeter Lug 6 on discriminator transformer to chassis (half discriminator load).

(b) Vacuum Tube Voltmeter Lug 3 on discriminator transformer to chassis (full discriminator load).

(c) Vacuum Tube Voltmeter from Limiter Grid to Chassis.

(d) Loosen Slugs by applying a hot iron to the cement.

ALIGNMENT PROCEDURE

Operation	Connect Oscillator To	Dummy Antenna	Input Signal Frequency	Band	Set Dial To	Adj. Trimmers	Purpose
1	Pin 7 12AT7 Converter	.05 Mfd.	455 KC Modulated	BC	600 Kc	L-9, 10, 13, 14, 17 and 18	Align I.F. channel for maximum output.
2	2 turns loosely cpld. to wavemagnet		1600 Kc. Modulated	BC	1600 Kc	C4	Set oscillator to dial scale
3	2 turns loosely cpld. to wavemagnet		1400 Kc Modulated	BC	1400 Kc	C3 and C2	Align det. and ant. stages
4 (a)	Pin 1 (grid) on 12AU6 limiter.	.05 Mfd.	10.7 Mc Unmodulated	FM 100		L19 coil slug Primary discr.	Align primary of discriminator for maximum reading.
5 (b)	Pin 1 (grid) on 12AU6 limiter.	.05 Mfd.	10.7 Mc. Unmodulated	FM 100		L20 coil slug sec. of discr.	Adjust secondary of discriminator for zero reading.
6 (c)	Pin 1 (grid) on 12BA6 2nd. IF.	.05 Mfd.	10.7 Mc. Unmodulated	FM 100		L15 and L16 Prim. and Sec. of 3rd IF transformer	Align 3rd. IF transformer for maximum reading.
7 (c)	Pin 1 (grid) on 12BA6 1st, IF.	.05 Mfd.	10.7 Mc. Unmodulated	FM 100		L11 and L12 Prim. and Sec. of 2nd. IF transformer	Align 2nd. IF transformer for maximum reading.
8 (c)	Pin 7 (grid) on 12AT7 converter tube socket	.05 Mfd.	10.7 Mc. Unmodulated	FM 100		L7 and L8 Prim. and Sec. of 1st IF transformer	Align 1st. IF Transformer for maximum reading.
9 (c)(d)	Antenna Post F (Remove line ant.)	270 ohms	98 Mc Unmodulated	FM 100	98 Mc.	L5 Osc. Coil Slug	Set Oscillator to dial scale
10 (c)(d)		270 ohms	98 Mc. Unmodulated	FM 100	98 Mc.	L3 and L2 Det. and RF coil Slugs	Align det. and ant. stages to maximum reading.

©John F. Rider

Compliments of www.nucow.com

MODEL G725,
Ch. 7G01

PARTS LIST

DIAL ASSEMBLY

12-1407		Dial Light Socket Mtg. Brkt.
*26-445		Dial Scale
46-538		Tuning Control Knob
46-718		Band Switch Knob
*46-855		Tone Control Knob
57-1613		Cabinet Emblem Plate
57-1615		Dial Scale Clamping Plate (4 Used)
*57-1641		Name Plate
*59-245		Dial Pointer
78-786		Dial Light Socket
80-69		Dial Cord Spring
80-209		Dial Cord Spring
80-444		Tuner Arm Tension Spring
80-580		Tuner Arm Stop Spring
80-581		Tuner Arm Pressure Spring
93-475		Felt Washer (Part of S-14124)
94-613		Iron Core Insulating Bushing (3 Used on S-14429)
100-97	PL-1	Dial Light Bulb - 115V
114-26		#8-32 X 1/4" Hex. Hd. Sl. M.S. (Used on 12-1407)
188-30		Retaining Ring (Used on 76-493)
188-102		Clamping Ring (46-538)
S-13983		Dial Cord & Eyelet Assem.
S-13945		Cam, Pulley & Bushing Assem.
S-13981		Tone Control Brkt. & Lug Assem.
S-14129		Vol. Control Knob Assem.
S-14429		Tuner Arm Assem.
*S-16735		Pointer Pulley & Bushing Assem.
*S-16884		Pulley & Shaft Assem.
*S-16887		Dial Cord & Eyelet Assem.

COILS & CHOKES

S-12256	L21	A.C. Line Choke Coil Assem.
S-13971	T2	2nd I.F. Trans. Assem.
S-13972	T3	3rd I.F. Trans. Assem.
S-13973	T4	Discriminator Trans. Assem.
S-14192	L2	F.M. Antenna Coil Assem.
S-15733	L5	F.M. Oscillator Coil Assem.
S-15743	L3	F.M. Detector Coil Assem.
S-15981	T1	1st. I.F. Trans. Assem.
S-16344	L4	Broadcast Detector Coil Assem.
S-16345	L6	Broadcast Osc. Coil Assem.

CONDENSERS

22-3	C5	.01 Mfd. Ceramic (Disc.) (10 Used)	500V
22-5	C8	110 Mfd. Ceramic (Disc.) (4 Used) or 22-1669	500V
22-829	C10	.05 Mfd. (3 Used)	200V
22-830	C17	.02 Mfd.	600V
22-854	C18	.0005 Mfd.	600V
22-1220	C13	.002 Mfd. (2 Used)	600V
22-1367	C12	50 Mmfd. Ceramic	500V
22-1506	C7	22 Mmfd. Ceramic (3 Used)	500V
22-1507	C15	25 Mmfd. Ceramic	500V
22-1661	C21, C22, C23, C24	Elect. Cond. 80-40-40 Mfd.-150V 40 Mfd.	25V
22-1676	C6	.001 Mfd. (3 Used)	500V
22-1677	C1	Three Gang Variable Cond.	
22-1683	C16	.02 Mfd. (Shielded)	400V
22-1702	C19	.005 Mfd.	400V
22-1705	C9	30 Mmfd. Ceramic	500V
22-1766	C11	.68 Mmfd. (Molded)	500V
22-1775	C26	.047 Mfd.	400V
22-2084	C20	.1 Mfd. (2 Used)	200V

RESISTORS

63-1202	R21	330 Ohm W.W. 2W 10% Ins.Res.
63-1450	R23	22 Ohm W.W. 1W 20% Ins.Res.
63-1452	R20	270 Ohm W.W. 2W 10% Ins.Res.
63-1584	R18	Volume Control & Switch
63-1737	R3	68 Ohm 1/2W 20% Ins.Res.
63-1744	R6	100 Ohm 1/2W 20% Ins.Res. (2 Used)
63-1747	R19	120 Ohm 1/2W 10% Ins.Res.
63-1772	R2	470 Ohm 1/2W 20% Ins.Res.
63-1779	R1	680 Ohm 1/2W 20% Ins.Res. (4 Used)
63-1785	R8	1000 Ohm 1/2W 10% Ins. Res. (2 Used)
63-1786	R9	1000 Ohm 1/2W 20% Ins. Res.
63-1799	R24	2200 Ohm 1/2W 10% Ins. Res.
63-1800	R7	2200 Ohm 1/2W 20% Ins. Res.
63-1806	R13	3300 Ohm 1/2W 10% Ins. Res.
63-1810	R14	3900 Ohm 1/2W 10% Ins. Res.
63-1817	R22	5600 Ohm 1/2W 10% Ins. Res.
63-1824	R15	8200 Ohm 1/2W 10% Ins. Res.
63-1828	R5	10K Ohm 1/2W 20% Ins. Res. (2 Used)
63-1856	R11	47K Ohm 1/2W 20% Ins. Res.
63-1870	R12	100K Ohm 1/2W 20% Ins.Res. (3 Used)
63-1876	R16	150K Ohm 1/2W 10% Ins.Res. (2 Used)
63-1898	R10	470K Ohm 1/2W 20% Ins.Res. (3 Used)
63-1926	R4	2.2 Megohm 1/2W 20% Ins.Res.
63-1940	R17*	4.7 Megohm 1/2W 20% Ins.Res. (3 Used)
*63-2108	R25	Tone Control

MISCELLANEOUS

12-1070		Wavemagnet Mtg. Brkt. (2 Used)
*14-1235		Plastic Cabinet for G725
19-139		Cabinet Back Retaining Clip (4 Used)
49-608	SP-1	7-1/2" P.M. Speaker 208-608 Cone & Voice Coil
54-139		#3/8-32 x 9/16" Palnut Type 9N Steel Cad. (Used on 63-1584)
54-140		#3/8-32 x 9/16" Hex Nut-Steel N.P. (Used on 63-2108)
54-226		Speed Nut-Tinnerman (1 ea. used on S-14192-S-15733 & S-15743)
54-269		#8-32 x 11/32" Palnut (6 Used to Mt. I.F.'s.)
57-1269		I. F. Trans. Terminal Plate (8 Used)
58-128		Two Prong Plug
*74-64		Grill Screen
78-782		Miniature Tube Socket (7 Contact)
78-787		Two Contact Socket (Used on S-14128)
78-788		Miniature Tube Socket (9 Contact)
78-794		Miniature Tube Socket (3 Used)
78-795		Miniature Tube Socket (7 Contact)
78-854		Miniature Tube Socket (9 Contact)

©John F. Rider

Compliments of www.nucow.com

MODEL G725,
Ch. 7G01

TUBE AND TRIMMER LOCATION

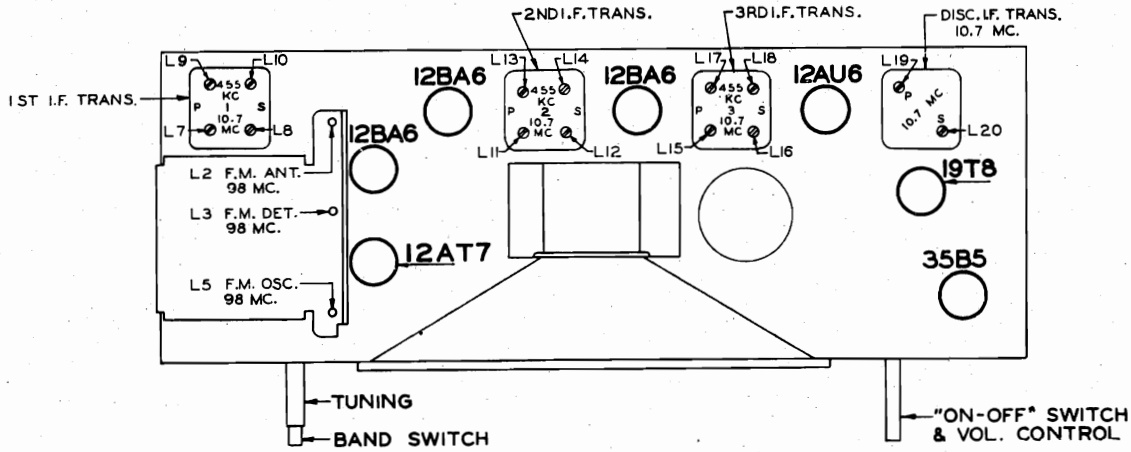

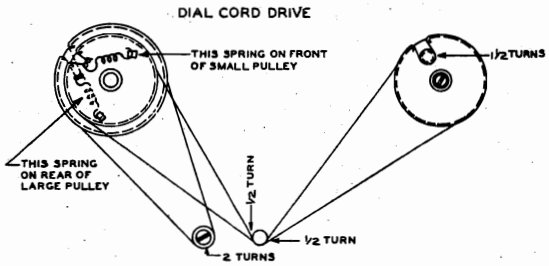

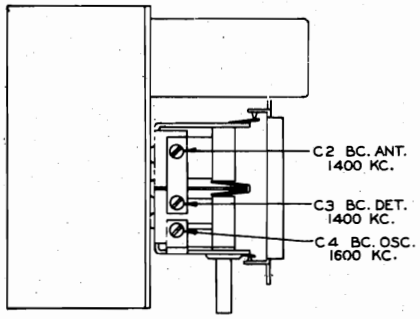

PARTS LIST—Continued

Part No.	Ref. No.	Description
		MISCELLANEOUS (Continued)
83-1056		Wavemagnet Mtg. Strip (2 Used)
83-1519		Aluminum Foil Strip
*83-1755		Aluminum Foil Strip
*83-1756		Indicator Strip
85-464	S1	Band Switch
93-665		Fibre Washer (2 Used on S-14385)
93-729		.032 X .187 X 5/8 Steel Washer N.P. (2 Used on S-13981)
94-334		Speaker Mtg. Bushing (4 Used)
94-485		Fibre Bushing (1 ea. used on 63-1584 & 63-2108)
95-1035	T5	Output Trans.
97-284		Dial Cord Guide Stud
97-293		Insulating Stud (4 Used)
112-281		#10 X 3/4" Oval B.H.S.T. Screw-Type Z - Stat. Bronze (4 Used Chassis Mtg.)
112-697		#6 X 7/16" Straight Side B.H.S.T. Screw (4 Used on Back)
114-26		#8 X 1/4" Hex Hd. S.T. (2 Used on S-13977)
114-78		#8 X 5/16" Hex Hd. Sl. S.T. N.P. (2 Used Wavemagnet Mtg)
114-292		#6 X 5/8" Hex Hd. Sl. S.T. Screw (8 Used)
114-319		#8-32 X 11/16" Hex Hd. Sl. M.S. Steel (2 Used on S-13981)
125-17		Rubber Grommet (4 Used on 49-608)
125-62		Rubber Grommet (4 Used)
*139-88		Baffle Board
149-64		Tuning Core (3 Used)
188-34		Retaining Ring
*188-136		Trim Ring
202-697		F.M. Instruction Book
*202-810		Instruction Book
212-7	SE-1	Selenium Rectifier
S-13977	L1	Wavemagnet Assem.
S-14128		Cabt. Back Assem. (Complete)
S-14358		Wavemagnet Cable Assem.

©John F. Rider

Compliments of www.nucow.com

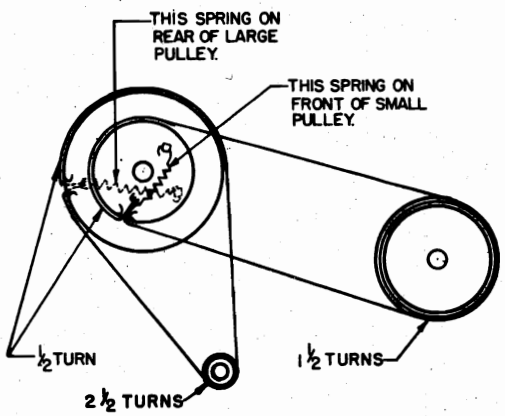

DIAL CORD DRIVE

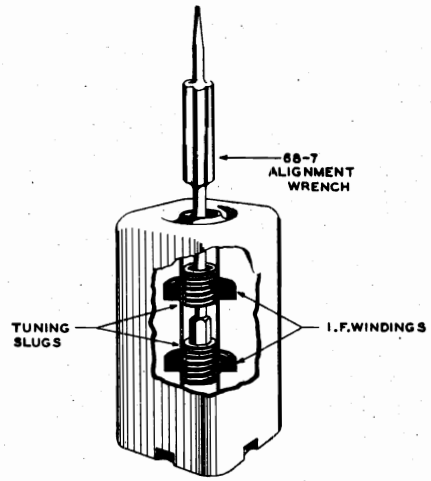

Detail of IF Transformer

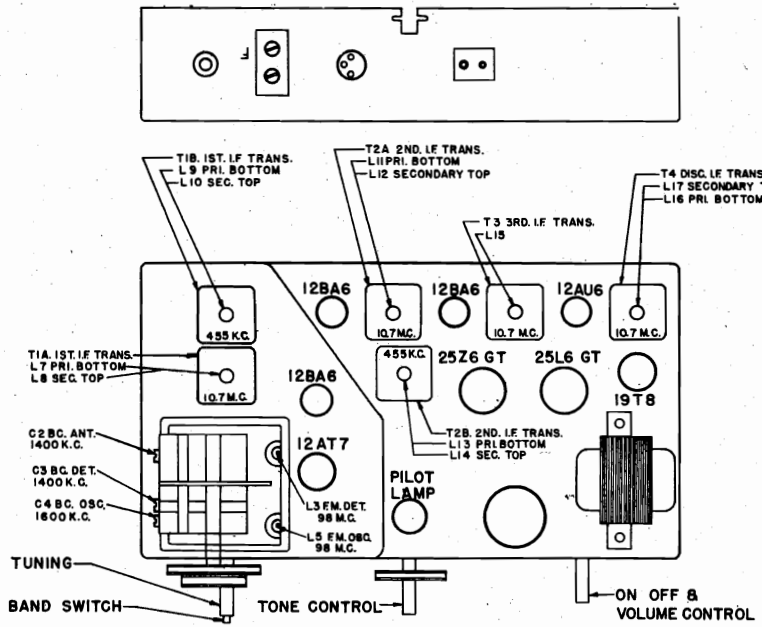

TUBE AND TRIMMER LOCATION

The 8G21 chassis incorporates a superheterodyne circuit with two stages of IF, on the FM Band, and one stage on the AM Band. There is one stage of RF amplification on all bands.

When adjustments are made on the 8G21 chassis, a line isolation transformer (110 V input to 110V output) is recommended in order to avoid a "hot" chassis. If an isolation transformer is not available, check the AC voltage between chassis and bench ground and if there is any indication of voltage, reverse the plug before handling the set.

FM RF Alignment: The tuning slugs are attached to threaded shafts and the slugs are varied in the field of the coils by turning the shafts clockwise or counter-clockwise. After adjustment the shafts must be secured with a drop of speaker cement.

AM And FM IF Alignment: The AM and FM IF transformers in this receiver are of the new permeability tuned type. The advantage of an I F transformer of this type is its extreme stability under various humidity and temperature conditions. The upper coil is the secondary and the lower the primary. When adjusting these I F transformers the tuning wrench 68-7 can be inserted into the top slug, rotated until maximum output is obtained and then dropped down to the lower slug and the same operation repeated. The tuning wrench is so designed that turning one slug does not affect the adjustment of the other.

FM IF Alignment: Because of the wide band pass, it is desirable to use a FM signal generator and a cathode ray oscilloscope when aligning the FM IF channel. The instruction book for the Zenith Model 800 Signal Generator (Form Z8001) covers complete FM alignment procedure. If visual alignment equipment is unavailable, reasonably accurate alignment can be made by following the procedure outlined below.

FM Discriminator Alignment: When the secondary of the discriminator is aligned (operation 5) use sufficient signal input to get a good positive and negative indication before setting the slug for zero reading. A center zero indicating meter is recommended for this adjustment, but is not absolutely necessary. Reversing the leads of a non-zero center meter, or observing closely when the meter starts to go to the left(negative) of zero will give the same results.

©John F. Rider
Compliments of www.nucow.com

MODEL G844, Ch. 8G21

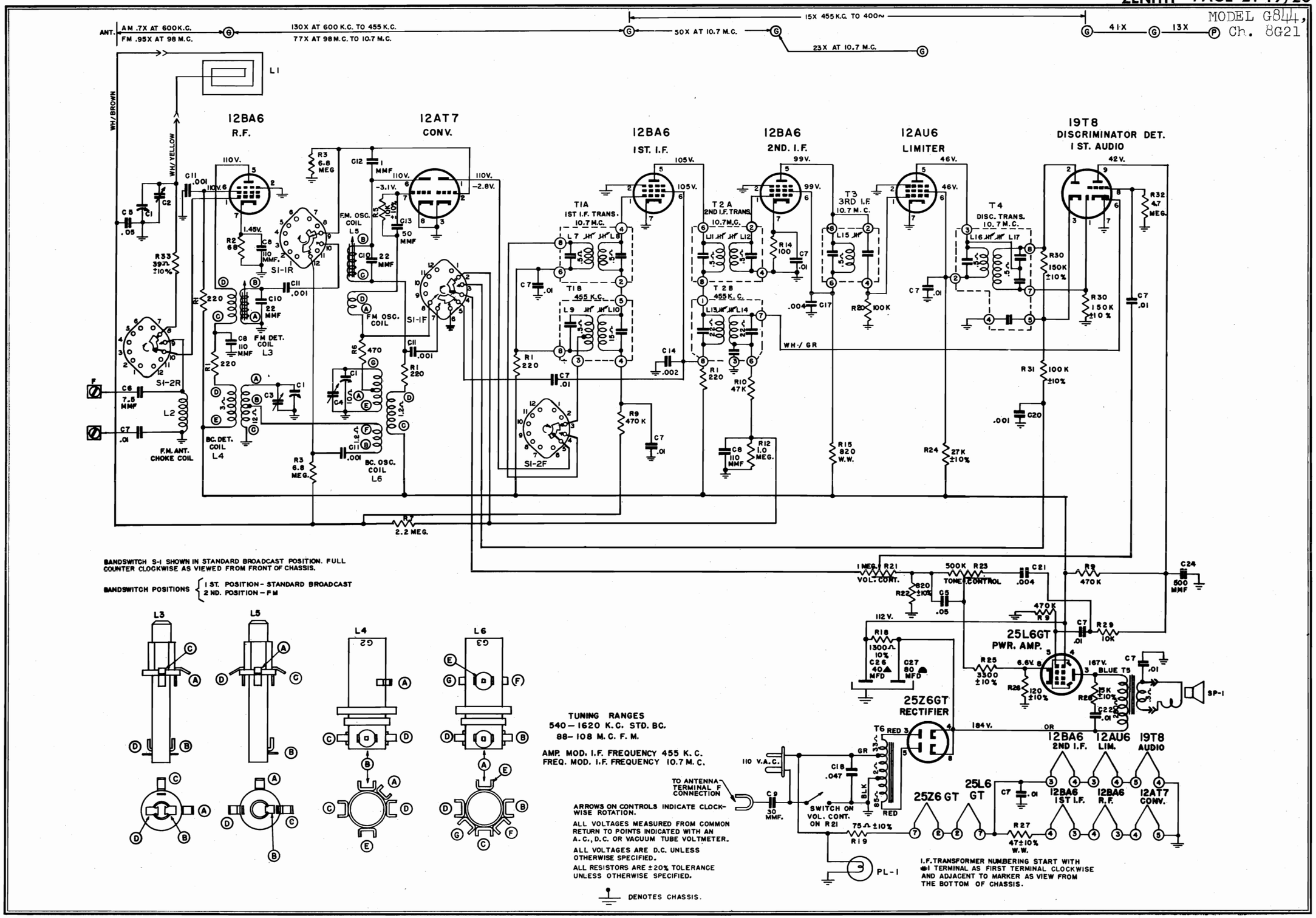

©John F. Rider

Compliments of www.nucow.com

MODEL G844,
Ch. 8G21

ALIGNMENT PROCEDURE

Operation	Connect Oscillator To	Dummy Antenna	Input Signal Frequency	Band	Set Dial To	Adj. Trimmers	Purpose
1	Pin 2 12AT7 Converter	.05 Mfd.	455 Kc. Modulated	BC	600 Kc.	L9, 10, 13, 14	Align I F. channel for maximum output.
2	2 turns loosely cpld. to wavemagnet		1600 Kc. Modulated	BC	1600 Kc.	C4	Set oscillator to dial scale.
3	2 turns loosely cpld. to wavemagnet		1400 Kc. Modulated	BC	1400 Kc.	C3, C2	Align detector and antenna stage.
4 (a)	Pin 1 (grid) on 12AU6 limiter.	.05 Mfd.	10.7 Mc. Unmodulated	FM 100		L16 coil slug Primary discr.	Align primary of discriminator for maximum reading.
5 (b)	Pin 1 (grid) on 12AU6 limiter.	.05 Mfd.	10.7 Mc. Unmodulated	FM 100		L17 coil slug sec. of discr.	Adjust secondary of discriminator for zero reading.
6 (c)	Pin 1 (grid) on 12BA6 2nd. I F.	.05 Mfd.	10.7 Mc. Unmodulated	FM 100		L15 Prim. of 3rd. IF trans.	Align 3rd. IF transformer for maximum reading.
7 (c)	Pin 1 (grid) on 12BA6 1st. IF.	.05 Mfd.	10.7 Mc. Unmodulated	FM 100		L11 and L12 Prim. and Sec. of 2nd. IF transformer.	Align 2nd IF transformer for maximum reading.
8 (c)	Pin 2 (grid) on 12AT7 converter tube socket.	.05 Mfd.	10.7 Mc. Unmodulated	FM 100		L7 and L8 Prim. and Sec. of 1st. IF transformer.	Align 1st. IF transformer for maximum reading.
9 (c)	Antenna Post FM (Remove line ant.)	270 ohms	98 Mc. Unmodulated	FM 100	98 Mc.	L5 Osc. Coil Slug.	Set Oscillator to dial scale.
10 (c) (d)		270 ohms	98 Mc. Unmodulated	FM 100	98 Mc.	L3 Det. Coil Slug	Align det. stage to maximum reading.

IMPORTANT

Alignment of this chassis will in most cases be unnecessary unless an IF or RF transformer is replaced or the adjustments have been tampered with.

Correct alignment can only be made if the following procedure is followed:

A vacuum tube voltmeter with an isolation resistor of 2,000,000 ohms in series with the hot lead will serve for FM adjustments. This lead should be shielded.

An AC output meter connected across the primary or secondary of the output transformer will be satisfactory for all AM adjustments.

The signal generator output should be kept just high enough to get an indication on the meter.

(a) Vacuum Tube Voltmeter Lug 7 on discriminator transformer to chassis (half discriminator load).

(b) Vacuum Tube Voltmeter Lug 5 on discriminator transformer to chassis (full discriminator load).

(c) Vacuum Tube Voltmeter from Limiter Grid to Chassis.

(d) Loosen Slugs by applying a hot iron to the cement.

©John F. Rider

MODEL G844,
Ch. 8G21

PARTS LIST

PART NO.	DESCRIPTION
	DIAL ASSEMBLY
26-429	Dial Scale & Glass (F.M. Band)
46-522	Dummy Knob
46-538	Tuning Knob
46-718	Band Switch & Vol. Control Knob (2 used)
46-831	Tone Control Knob
54-292	Speed Nut - Tinnerman (Used on 94-671)
76-578	Tuning Control Shaft
78-872	Dial Light Socket & Wire
80-69	Dial Cord Spring
80-402	Dial Cord Spring
80-746	Pulley Retaining Spring
80-801	Tuner Arm Tension Spring
93-993	Insulating Washer (2 used)
94-671	Pointer Pulley Bushing
100-97	Pilot Light Bulb
148-122	Tuner Arm
S-16281	Pointer Pulley & Shaft Assembly
S-16346	Dial Cord & Eyelet Assembly (Long)
S-16351	Dial Scale & Brkt. Assembly
S-16740	Dial Cord & Eyelet Assembly (Short)
	COILS & CHOKES
95-1102	2nd. I. F. Transformer
95-1150	2nd. I. F. Tranformer
95-1152	3rd. I. F. Transformer
95-1153	Disc. Trans.
95-1200	1st. I. F. Transformer
95-1201	1st. I. F. Transformer
S-15691	F.M. Osc. Coil Assembly
S-15743	F.M. Detector Coil Assembly
S-16344	Broadcast Det. Coil Assembly
S-16345	Broadcast Osc. Coil Assembly
S-16408	Antenna Choke Coil Assembly
	CONDENSERS
22-3	.01 Mfd. Ceramic 500V
22-4	.004 Mfd. Ceramic 500V
22-5	110 Mmfd. Ceramic (or 22-1669) 500V
22-448	.004 Mfd. 600V
22-669	.01 Mfd. 600V
22-829	.05 Mfd. 200V
22-854	.0005 Mfd. 600V
22-1220	.002 Mfd. 600V
22-1367	50 Mmfd. Ceramic 500V
22-1506	22 Mmfd. Ceramic 500V
22-1676	.001 Mfd. Ceramic 500V
22-1705	30 Mmfd. 500V
22-1717	.001 Mfd. 200V
22-1762	1 Mmfd. Ceramic 500V
22-1775	.047 Mfd. (Molded) 400V
22-1852	7.5 Mmfd. Ceramic 500V
22-2104	Three Section Variable Cond.
22-2105	Elect. 80-40 Mfd. 250V
	RESISTORS
63-1726	39 Ohm 1/2W 10% Ins. Res.
63-1737	68 Ohm 1/2W 20% Ins. Res.
63-1744	100 Ohm 1/2W 20% Ins. Res.
63-1758	220 Ohm 1/2W 20% Ins. Res.
63-1772	470 Ohm 1/2W 20% Ins. Res.
63-1782	820 Ohm 1/2W 10% Ins. Res.

PART NO.	DESCRIPTION
	RESISTORS
63-1806	3300 Ohm 1/2W 10% Ins. Res.
63-1827	10K Ohm 1/2W 10% Ins. Res.
63-1828	10K Ohm 1/2W 20% Ins. Res.
63-1834	15K Ohm 1/2W 10% Ins. Res.
63-1845	27K Ohm 1/2W 10% Ins. Res.
63-1856	47K Ohm 1/2W 20% Ins. Res.
63-1869	100K Ohm 1/2W 10% Ins. Res.
63-1870	100K Ohm 1/2W 20% Ins. Res.
63-1876	150K Ohm 1/2W 10% Ins. Res.
63-1898	470K Ohm 1/2W 20% Ins. Res.
63-1912	1 Megohm 1/2W 20% Ins. Res.
63-1926	2.2 Megohm 1/2W 20% Ins. Res.
63-1940	4.7 Megohm 1/2W 20% Ins. Res.
63-1947	6.8 Megohm 1/2W 20% Ins. Res.
63-1981	120 Ohm 1W 10% Ins. Res.
63-2062	Vol. Control & Switch
63-2063	Tone Control
63-2068	Candohm Resistors - Two Section
63-2091	820 Ohm W.W. 1/2W 20% Ins. Res.
63-2093	47 Ohm W.W. 1W 10% Ins. Res.
	MISCELLANEOUS
49-678	10" P.M. Speaker 208-678 Cone & Voice Coil
54-303	Speed Nut - Tinnerman (5 used on Esc. Mtg.)
57-1481	Esc. Clamping Plate
57-1613	Emblem Plate
57-1616	Escutcheon
70-86	#6 x 5/8" Washer Hd. Wood Screw Stat. Bronze (7 used S-16498)
78-755	Octal Tube Socket (2 used)
78-807	Miniature Tube Socket
78-854	Miniature Tube Socket
78-869	Miniature Tube Socket
78-870	Miniature Tube Socket
78-871	Miniature Tube Socket
80-780	Iron Core Tension Spring
83-1698	Rubber Channel Strip
83-1701	Chassis Insulating Strip
85-477	Band Switch
93-968	.046 x .171 x 1/2 Steel Washer Cad. (2 used on Esc. Mtg.)
95-1188	Auto Power Trans.
95-1189	Output Trans.
97-293	Chassis Mtg. Insulating Stud
114-148	#10 x 7/8" Hex Washer Hd. S.T. Screw (3 used Chassis Mtg.)
114-297	#6 x 1/4" Hex Hd. Sl. S.T. (2 used on Esc.)
114-313	#8 x 1/2" Hex Hd. Sl. S.T. (4 used on Esc. Mtg.)
149-95	Iron Core & Spring
165-9	Glides (4 used)
188-30	Retaining Ring (Used on 85-477)
196-135	Dust Gasket
202-697	F.M. Instruction Book
202-774	Instruction Book
S-16161	Speaker Cable & Eyelet Assembly
S-16359	Wavemagnet Assembly
S-16498	Cabinet Back Assembly (Complete with A.C. Cord and Wavemagnet)

©John F. Rider

Compliments of www.nucow.com

MODELS G881, G882, G883, G884, G885, Ch. 8G20

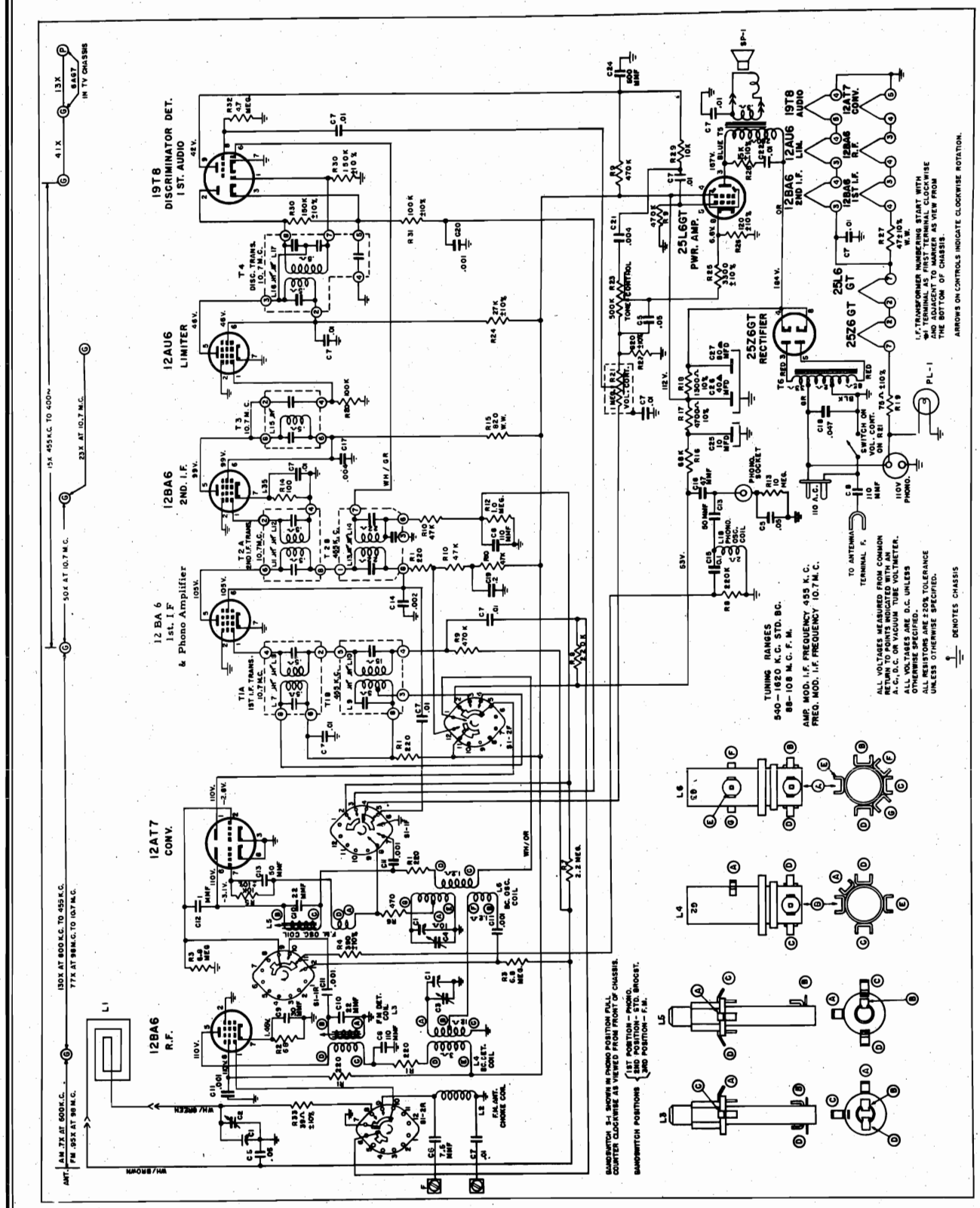

©John F. Rider

Compliments of www.nucow.com

MODELS G881, G882, G883, G884, G885, Ch. 8G20

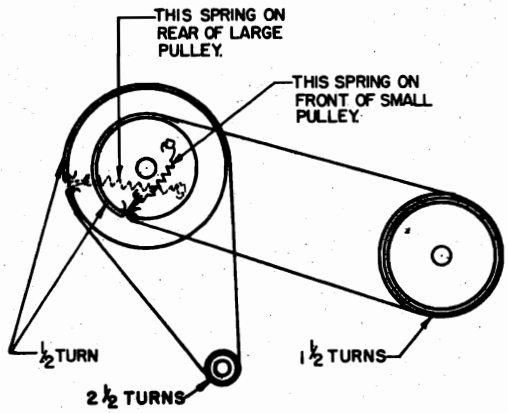

DIAL CORD DRIVE

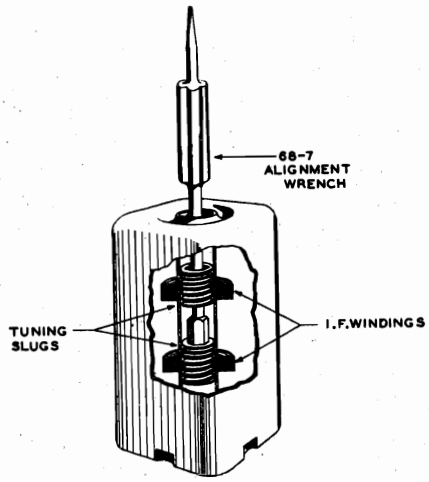

Detail of IF Transformer

The 8G20 chassis incorporates a superheterodyne circuit with two stages of IF, on the FM Band, and one stage on the AM Band. There is one stage of RF amplification on all Bands.

When adjustments are made on the 8G20 chassis, a line isolation transformer (110 V input to 110V output) is recommended in order to avoid a "hot" chassis. If an isolation transformer is not available, check the AC voltage between chassis and bench ground and if there is any indication of voltage, reverse the plug before handling the set.

FM RF Alignment: The tuning slugs are attached to threaded shafts and the slugs are varied in the field of the coils by turning the shafts clockwise or counter-clockwise. After adjustment the shafts must be secured with a drop of speaker cement.

AM And FM IF Alignment: The AM and FM IF transformers in this receiver are of the new permeability tuned type. The advantage of an I F transformer of this type is its extreme stability under various humidity and temperature conditions. The upper coil is the secondary and the lower the primary. When adjusting these I F transformers the tuning wrench 68-7 can be inserted into the top slug, rotated until maximum output is obtained and then dropped down to the lower slug and the same operation repeated. The tuning wrench is so designed that turning one slug does not affect the adjustment of the other.

FM IF Alignment: Because of the wide band pass, it is desirable to use a FM signal generator and a cathode ray oscilloscope when aligning the FM IF channel. The instruction book for the Zenith Model 800 Signal Generator (Form Z8001) covers complete FM alignment procedure. If visual alignment equipment is unavailable, reasonably accurate alignment can be made by following the procedure outlined below.

FM Discriminator Alignment: When the secondary of the discriminator is aligned (operation 5) use sufficient signal input to get a good positive and negative indication before setting the slug for zero reading. A center zero indicating meter is recommended for this adjustment, but is not absolutely necessary. Reversing the leads of a non-zero center meter, or observing closely when the meter starts to go to the left (negative) of zero will give the same results.

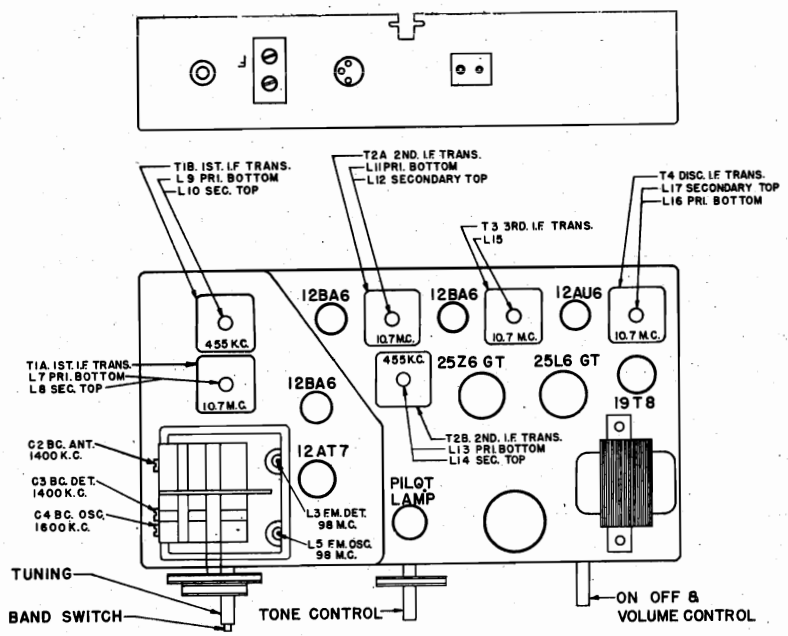

TUBE AND TRIMMER LOCATION

©John F. Rider

Compliments of www.nucow.com

ALIGNMENT PROCEDURE

Operation	Connect Oscillator To	Dummy Antenna	Input Signal Frequency	Band	Set Dial To	Adj. Trimmers	Purpose
1	Pin 2 12AT7 Converter	.05 Mfd.	455 Kc. Modulated	BC	600 Kc.	L9, 10, 13, 14	Align I F. channel for maximum output.
2	2 turns loosely cpld. to wavemagnet		1600 Kc. Modulated	BC	1600 Kc.	C4	Set oscillator to dial scale.
3	2 turns loosely cpld. to wavemagnet		1400 Kc. Modulated	BC	1400 Kc.	C3, C2	Align detector and antenna stage.
4 (a)	Pin 1 (grid) on 12AU6 limiter.	.05 Mfd.	10.7 Mc. Unmodulated	FM 100		L16 coil slug Primary discr.	Align primary of discriminator for maximum reading.
5 (b)	Pin 1 (grid) on 12AU6 limiter.	.05 Mfd.	10.7 Mc. Unmodulated	FM 100		L17 coil slug sec. of discr.	Adjust secondary of discriminator for zero reading.
6 (c)	Pin 1 (grid) on 12BA6 2nd. I F.	.05 Mfd.	10.7 Mc. Unmodulated	FM 100		L15 Prim. of 3rd. IF trans.	Align 3rd. IF transformer for maximum reading.
7 (c)	Pin 1 (grid) on 12BA6 1st. IF.	.05 Mfd.	10.7 Mc. Unmodulated	FM 100		L11 and L12 Prim. and Sec. of 2nd. IF transformer.	Align 2nd IF transformer for maximum reading.
8 (c)	Pin 2 (grid) on 12AT7 converter tube socket.	.05 Mfd.	10.7 Mc. Unmodulated	FM 100		L7 and L8 Prim. and Sec. of 1st. IF transformer.	Align 1st. IF transformer for maximum reading.
9 (c)	Antenna Post FM (Remove line ant.)	270 ohms	98 Mc. Unmodulated	FM 100	98 Mc.	L5 Osc. Coil Slug.	Set Oscillator to dial scale.
10 (c) (d)		270 ohms	98 Mc. Unmodulated	FM 100	98 Mc.	L3 Det. Coil Slug	Align det. stage to maximum reading.

IMPORTANT

Alignment of this chassis will in most cases be unnecessary unless an IF or RF transformer is replaced or the adjustments have been tampered with.

Correct alignment can only be made if the following procedure is followed:

A vacuum tube voltmeter with an isolation resistor of 2,000,000 ohms in series with the hot lead will serve for FM adjustments. This lead should be shielded.

An AC output meter connected across the primary or secondary of the output transformer will be satisfactory for all AM adjustments.

The signal generator output should be kept just high enough to get an indication on the meter.

(a) Vacuum Tube Voltmeter Lug 7 on discriminator transformer to chassis (half discriminator load).

(b) Vacuum Tube Voltmeter Lug 5 on discriminator transformer to chassis (full discriminator load).

(c) Vacuum Tube Voltmeter from Limiter Grid to Chassis.

(d) Loosen Slugs by applying a hot iron to the cement.

©John F. Rider

Compliments of www.nucow.com

MODELS G881, G882, G883, G884, G885, Ch. 8G20

PARTS LIST

PART NO.	DESCRIPTION
	DIAL ASSEMBLY
76-578	Tuning Control Shaft
78-872	Dial Light Socket & Wire
80-402	Dial Cord Springs (2 used)
80-746	Pulley Retaining Spring
80-781	Tuner Arm Tension Spring
94-671	Pointer Pulley Bushing
100-97	Pilot Light Bulb
148-122	Tuner Arm
S-16281	Pointer Pulley & Shaft Assembly
S-16346	Dial Cord & Eyelet Assembly (Long)
S-16347	Dial Cord & Eyelet Assembly (Short)
S-16351	Dial Scale & Bracket Assembly (26-438)
	COILS & CHOKES
95-1102	2nd. I.F. Transformer
95-1150	2nd. I.F. Transformer
95-1152	3rd. I.F. Transformer
95-1153	Disc. Transformer
95-1200	1st. I.F. Transformer
95-1201	1st. I.F. Transformer
S-12603	Phono Osc. Coil Assembly
S-15691	F.M. Osc. Coil Assembly
S-15743	F.M. Detector Coil Assembly
S-16344	Broadcast Detector Coil Assembly
S-16345	Broadcast Oscillator Coil Assembly
S-16408	Antenna Choke Coil Assembly
	CONDENSERS
22-3	.01 Mfd. Ceramic 500V
22-4	.004 " " 500V
22-5	110 Mmfd. " (or 22-1669) 500V
22-177	.2 Mfd. 400V
22-448	.004 Mfd. 600V
22-669	.01 " 600V
22-827	.1 " 200V
22-829	.05 " 200V
22-854	.0005 " 600V
22-1220	.002 " 600V
22-1367	50 Mmfd. Ceramic 500V
22-1506	22 " " 500V
22-1676	.001 Mfd. " 500V
22-1705	30 Mmfd. " 500V
22-1717	.001 Mfd. 200V
22-1762	1 Mmfd. " 500V
22-1775	.047 Mfd. (Molded) 400V
22-1852	7.5 Mmfd. Ceramic 500V
22-1876	47 " " 500V
22-2104	Three Section Variable Cond.
22-2105	Elect. Cond. 80-40 Mfd. 250V
22-2154	Elect. Cond. 10 Mfd. 250V
	RESISTORS
63-1726	39 Ohm 1/2W 10% Ins. Res.
63-1736	68 Ohm 1/2W 20% Ins. Res.
63-1744	100 Ohm 1/2W 20% Ins. Res.
63-1758	220 Ohm 1/2W 20% Ins. Res.
63-1768	390 Ohm 1/2W 10% Ins. Res.
63-1772	470 Ohm 1/2W 20% Ins. Res.
63-1782	820 Ohm 1/2W 10% Ins. Res.
63-1806	3300 Ohm 1/2W 10% Ins. Res.
63-1813	4700 Ohm 1/2W 10% Ins. Res.
33-1827	10K Ohm 1/2W 10% Ins. Res.
63-1828	10K Ohm 1/2W 20% Ins. Res.
63-1834	15K Ohm 1/2W 10% Ins. Res.
63-1845	27K Ohm 1/2W 10% Ins. Res.
63-1856	47K Ohm 1/2W 20% Ins. Res.
63-1863	68K Ohm 1/2W 20% Ins. Res.
63-1869	100K Ohm 1/2W 10% Ins. Res.
63-1870	100K Ohm 1/2W 20% Ins. Res.
63-1876	150K Ohm 1/2W 10% Ins. Res.
63-1884	220K Ohm 1/2W 20% Ins. Res.
63-1898	470K Ohm 1/2W 20% Ins. Res.
63-1912	1 Megohm 1/2W 20% Ins. Res.
63-1926	2.2 Megohm 1/2W 20% Ins. Res.
63-1940	4.7 Megohm 1/2W 20% Ins. Res.
63-1947	6.8 Megohm 1/2W 20% Ins. Res.
63-1954	10 Megohm 1/2W 20% Ins. Res.
63-1981	120 Ohm 1W 10% Ins. Res.
63-2062	Volume Control & Switch
63-2063	Tone Control
63-2068	Candohm - Two Section
63-2091	820 Ohm W.W. 1/2W 20% Ins. Res.
63-2093	47 Ohm W.W. 1W 10% Ins. Res.
	MISCELLANEOUS
44-25	Phono Jack
54-108	3/8-32 x 9/16 Palnut Cad. (1 ea. used 63-2062 & 63-2063)
54-271	6-32 x 1/4" Palnut Steel Cad. (1 ea. used on I. F's.)
54-292	Speed Nut-Tinnerman (Used on 94-671)
58-128	Two Prong Plug (A. C. Interlock)
78-461	Two Contact Socket
78-755	Octal Tube Socket (2 used)
78-807	Miniature Tube Socket
78-854	Miniature Tube Socket (9 Contact)
78-869	Miniature Tube Socket
78-870	Miniature Tube Socket (2 used)
78-871	Miniature Tube Socket
80-780	Iron Core Tension Spring
85-467	Band Switch
93-993	Insulating Washer (2 used)
93-1039	Gang Mouting Cup Washer (2 used)
95-1188	Auto Power Trans.
95-1189	Output Transformer (Speaker)
113-8	#6-32 x 1/4" Hex. Hd. Sl. M.S. Steel Int. Shakeproof (2 each used 22-2104 and 85-467)
114-297	#6 x 1/4" Hex Hd. Sl. S.T. (2 used on S-16351)
125-62	Rubber Grommet (3 used)
125-73	Rubber Grommet (2 used)
149-95	Iron Core & Spring
188-30	Retaining Ring (Used on 85-467)
S-16161	Speaker Cable & Eyelet Assembly
	G 884 CABINET PARTS
2-106	Cabinet Back (Phono-Section)
26-429	Dial Scale & Glass (F.M. Band)
46-522	Dummy Knob
46-538	Tuning Knob
46-718	Band Switch & Volume Control Knob (2 used)
46-831	Tone Control Knob
49-624	12" P.M. Speaker 208-624 Cone & Voice Coil
54-303	Speed Nut (5 used on Esc.)
57-1481	Esc. Clamping Plate (2 used)
57-1591	Escutcheon
57-1613	Emblem Plate
70-86	#6 x 5/8 Washer Hd. Wood Screw Steel Stat. Bronze (8 used on S-16516-5 Used 2-160)
80-604	Hinge Spring (2 used)
83-1698	Rubber Channel Strip (Used on Esc.)
97-293	Chassis Mtg. Insulating Stud (3 used)
114-148	#10 x 7/8 Hex Washer Hd. S.T. Screw (3 used Chassis Mtg.)
114-313	#8 x 1/2" Hex Hd. Sl. S. T. Screw-Cad. (4 used Mtg. Esc.)
138-33	Metal Grill
165-9	Glides
165-14	Glides
196-135	Dust Gasket
202-777	Radio & Phono Instruction Book
S-14025	Three Speed Changer
PART NO.	DESCRIPTION
S-15536	Record Changer Compt. Hinge Brkt. & Link Assembly (2 used)
S-15780	Cobra Cartridge
S-16196	Record Changer Mtg. Frame & Arm Assem.
S-16359	Wavemagnet Assembly
S-16516	Cabinet Back Assembly (Complete with A.C. Cord and Wavemagnet) (Radio Section)
	G885 CABINET PARTS
2-165	Cabinet Back (Phono Section)
19-123	Record Changer Mtg. Clip (4 used)
26-429	Dial Scale (F.M. Band)
43-185	Record Changer Housing
46-522	Dummy Knob
46-538	Tuning Knob
46-718	Band Switch & Volume Control Knob
46-831	Tone Control Knob
49-678	10" P.M. Speaker *208-678 Cone & Voice Coil
54-303	Speed Nut-Tinnerman (5 used on Esc.)
57-1481	Esc. Clamping Plate (2 used)
57-1591	Escutcheon
57-1613	Emblem Plate
70-86	#6 x 5/8" Washer Hd. Wood Screw - Steel Stat. Bronze (5 used S-16513 & 4 used 2-165)
70-98	#8 x 5/8" R.H. Wood Screw-Steel N.P. (3 used on S-16508)
83-1698	Rubber Channel Strip
83-1721	Roller Bearing Strip
83-1722	Latch Support Strip
97-293	Chassis Mtg. Insulating Stud (3 used)
112-791	Record Changer Mtg. Screw (4 used)
113-25	6-32 x 3/8 Hex Hd. Sl. M.S. Shakeproof Lockwasher (2 used on 156-20)
114-148	#10 x 7/8" Hex Washer Hd. S.T. Screws (3 used Chassis Mtg.)
114-253	6-20 x 3/8 Hex Hd. Sl. S.T. Screw Cad. Shakeproof (4 used on S-16509)
114-313	#8 x 1/2" Hex Hd. Sl. S. T. Screw (4 used on Esc.)
125-76	Rubber Grommet (4 used on Changer)
156-20	Record Changer Housing Latch
165-9	Glides (2 used)
165-14	Glides (2 used)
196-135	Dust Gasket
202-776	Radio & Phono Inst. Book
S-14026	Twin Seven Record Changer
S-15222	Cobra Tone Arm Cartridge
S-16359	Wavemagnet Assembly Type 38C
S-16508	Channel Brkt. & Lever Assembly
S-16509	Channel Brkt. & Roller Assembly
S-16513	Cabinet Back Assembly (Complete with A.C. Cord & Wavemagnet)
	G 883E CABINET PARTS
26-429	Dial Scale
46-522	Dummy Knob
46-538	Tuning Knob
46-718	Band Switch & Volume Control Knob
46-831	Tone Control Knob
49-624	12" P.M. Speaker 208-624 Cone & Voice Coil
54-303	Speed Nut Tinnerman (5 used on Esc.)
57-1481	Esc. Clamping Plate (2 used)
57-1591	Esc.
57-1613	Emblem Plate
70-86	#6 x 5/8 Washer Hd. Wood Screw Steel Stat. Bronze (5 used on S-16641)
80-604	Hinge Spring (2 used)
83-1698	Rubber Channel Strip
93-968	.046 x .171 x 1/2" Steel Washer (2 used on Esc.)
97-293	Chassis Mtg. Insulating Stud (3 used)
114-148	#10 x 7/8 Hex Washer Hd. St. T. Screw (3 used Chassis Mtg.)
114-313	#8 x 1/2" Hex Hd. Sl. S.T. Screw (4 used on Esc. Mtg.
165-9	Glides (2 used)
165-14	Glides (2 used)
196-135	Dust Gasket
202-777	Radio & Phono.Insutruction Book
S-14025	Three Speed Record Changer
S-15536	Record Changer Compt. Hinge Brkt. & Link Assembly (2 used)
S-15780	Cobra Tone Arm Cartridge
S-16196	Record Changer Mtg. Frame & Arm Assem.
S-16359	Wavemagnet Assembly Type 38C
S-16641	Cabinet Back Assembly (Complete with A.C. Cord & Wavemagnet)

G 882R CABINET PARTS

G882R is the same as G883E except the following:

Omit:

S-16641 Cabinet Back Assembly (Complete)

Add:

S-16513 Cabinet Back Assembly (Complete with A.C. Cord & Wavemagnet)

G 881 CABINET PARTS

2-179	Cabinet Back (Phono-Section)
19-169	Record Changer Mtg. Clip (4 used)
22-2144	150 Mmfd. Ceramic Cond. 500V
26-429	Dial Scale
46-522	Dummy Knob
46-538	Tuning Knob
46-718	Band Switch & Vol. Control Knob (2 used)
46-831	Tone Control Knob
49-624	12" P.M. Speaker 208-624 Cone & Voice Coil
54-303	Speed Nut (5 used on Esc. Mtg.)
57-1481	Esc. Clamping Plate (2 used)
57-1591	Escutcheon
57-1613	Emblem Plate
58-75	Connector Plug
58-86	Two Prong Plug
70-66	#8 x 1/2" R.H.W.S. Steel N.P. (2 used on 95-1228)
70-86	#6 x 5/8 Washer Hd. Wood Screw Steel Stat. Bronze (5 used on S-16516 & 8 used 2-179)
78-750	Six Contact Socket (used on S-16683)
80-604	Hinge Spring (2 used)
80-678	Record Changer Mtg. Spring (4 used)
83-1245	Record Changer Trim Strip
83-1698	Rubber Channel Strip
93-968	.046 x .171 x 1/2" Steel Washer Cad. (2 used on Esc. Mtg.)
95-1228	Filament Transformer
97-293	Chassis Mtg. Insulating Stud (3 used)
112-712	Record Changer Mtg. Screw
114-148	#10 x 7/8 Hex Washer Hd. S. T. Screw (3 used Chassis Mtg.)
114-313	#8 x 1/2" Hex Hd. Sl. S. T. Screw (4 used on Esc. Mtg.)
138-33	Metal Grill
165-9	Glides (2 used)
165-14	Glides (2 used)
196-135	Dust Gasket
202-802	Radio & Phono Inst. Book
S-14021	Dual Speed Record Changer
S-15536	Record Changer Compt. Hinge Brkt. & Link Assembly (2 used)
S-15538	Record Changer Frame Assembly
S-15780	Cobra Tone Arm Cartridge
S-16359	Wavemagnet Assembly Type 38C
S-16516	Cabinet Back Assembly (Complete with A.C. Cord & Wavemagnet)
S-16683	Adapter Cable Assembly

©John F. Rider

Compliments of www.nucow.com

MODELS H661E, H661R, H665, H665R, H665RZ, H665Z, Ch. 6H01

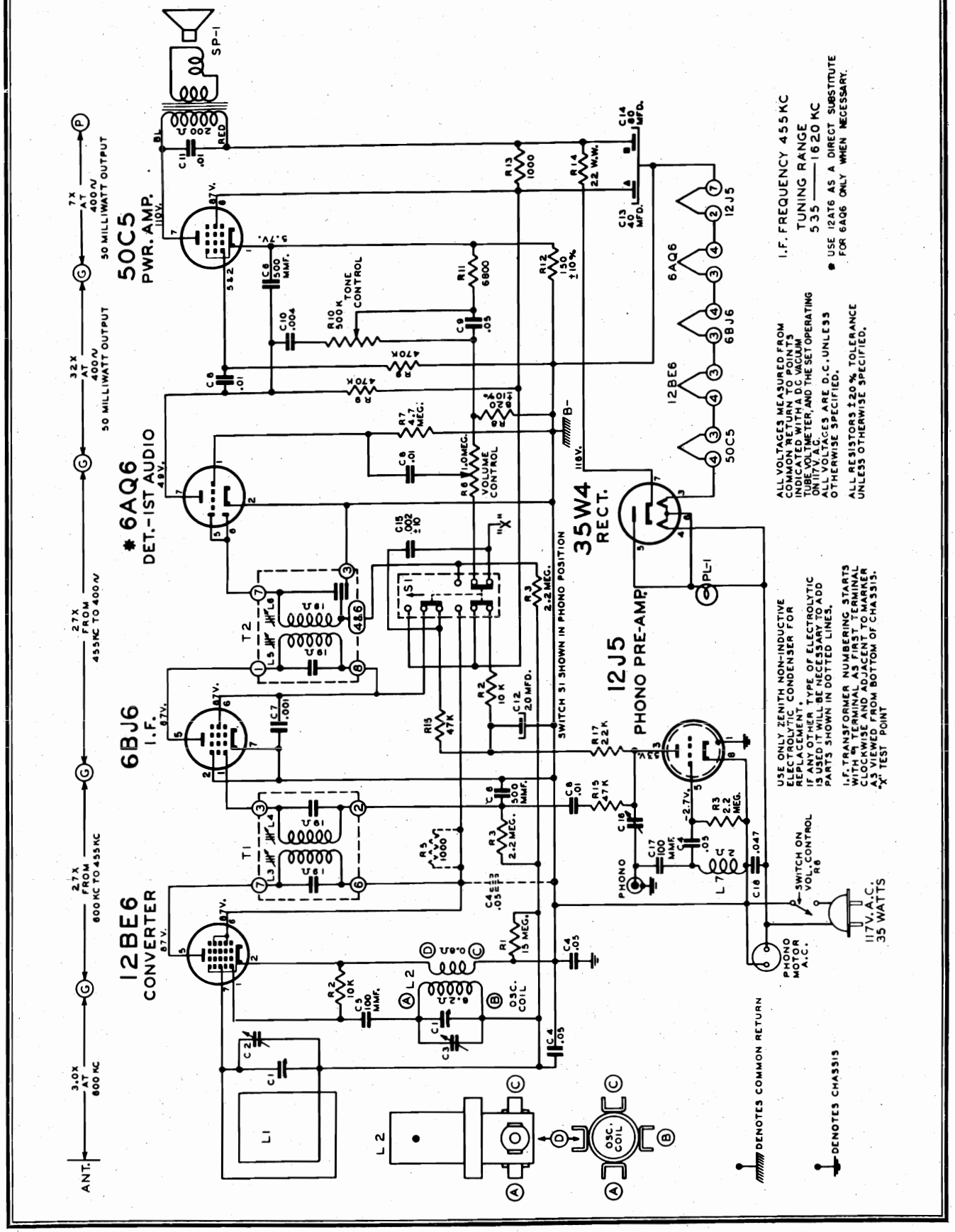

©John F. Rider

Compliments of www.nucow.com

The I.F. transformers incorporated in this receiver are of the new permeability tuned type. The advantage of an I.F. transformer of this type is its extreme stability under various humidity and temperature conditions. The upper coil is the secondary and the lower the primary. When adjusting these I.F. transformers the tuning wrench 68-7 can be inserted into the top slug, rotated until maximum output is obtained and then dropped down to the lower slug and the same operation repeated. The tuning wrench is so designed that turning one slug does not affect the adjustment of the other.

In the event the receiver oscillates during phono operation, adjust C16 4-80 mmf. capacitor to a point at which the oscillation ceases.

This position of no oscillation will sometimes vary with different cartridges, and in this case readjustment of C16 must be made.

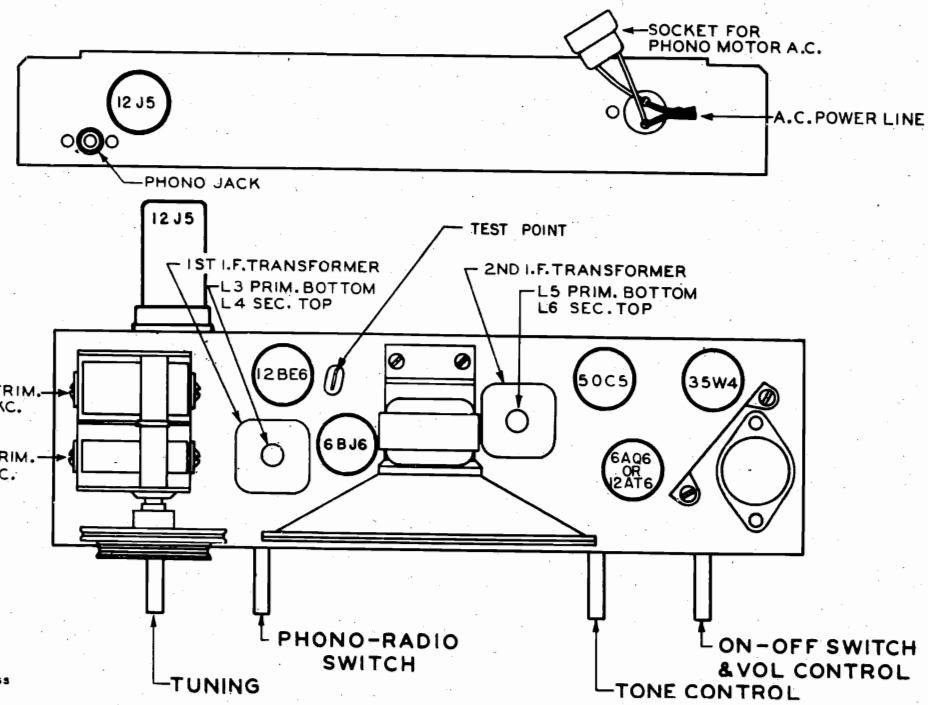

TUBE AND TRIMMER LOCATION

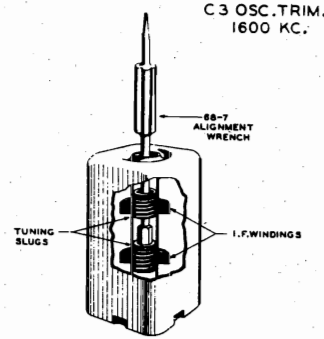

Detail of IF Transformer

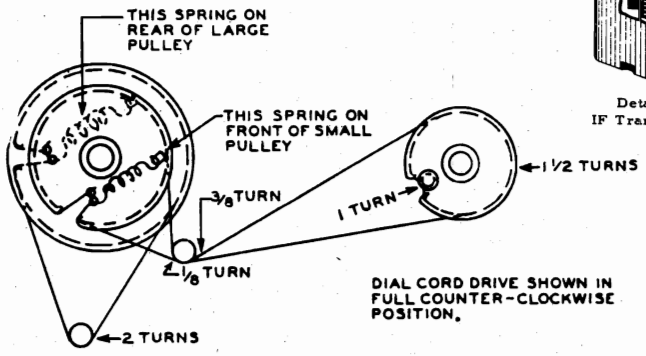

DIAL CABLE DRAWING AND DETAIL OF I. F. TRANSFORMER

ALIGNMENT PROCEDURE

OPERATION	CONNECT OSCILLATOR TO	DUMMY ANTENNA	INPUT SIG. FREQUENCY	SET DIAL AT	TRIMMERS	PURPOSE
1	Converter Grid	.5 Mfd.	455 Kc.	600 Kc.	L3, 4, 5, 6	For I. F. Alignment
2	One Turn Loop Coupled Loosely to Wave Magnet	--	1600 Kc.	1600 Kc.	C-3	Set Oscillator to Dial Scale.
3		--	1400 Kc.	1400 Kc.	C-2	Align Antenna Stage

©John F. Rider

Compliments of www.nucow.com

MODELS H661E, H661R, H665, H665R, H665RZ, H665Z, Ch. 6H01

PARTS LIST

MODELS H665, H665R, H665Z, H665RZ, H661E & H661R CHASSIS 6H01

Coils & Chokes

95-1101	T1- 1st. I.F. Transformer
95-1102	T2- 2nd. I.F. Transformer
S-12603	L7- Phono Oscillator Coil Assembly
S-13799	L2- Oscillator Coil Assembly

Condensers

22-3	C8-.01	Mfd.	Ceramic (Disc.)	500V	(3 used)
22-4	C10-.004	Mfd.	Ceramic (Disc.)	500V	
22-5	C5-110	Mmfd.	Ceramic (Disc.) (or 22-162)	500V	
22-178	C9-.05	Mfd.		200V	
22-829	C4-.05	Mfd.		200V	(3 used)
22-854	C6-.0005	Mfd.		600V	(2 used)
22-1182	C11-.01	Mfd.		400V	
22-1444	C7-.001	Mfd.		200V	
22-1701	C17-100	Mmfd.	Ceramic	500V	
22-1775	C18-.047	Mfd.		400V	
22-2085	C1-Variable - 2 gang				
22-2272	C12,13,14	Elect. - 20 Mfd.		150V x 40 Mfd. 150V x 80 Mfd. - 150V	
22-2241	C15-.002	Mfd.	Ceramic	500V	
22-2242	C16-Trimmer Capacitor				

Resistors

63-1219	R14-22	ohm	W.W.	1/2W	20%	Ins. Res.
63-1574	R13-1000	ohm		1W	20%	Ins. Res.
63-1786	R5-1000	ohm		1/2W	20%	Ins. Res.
63-1782	R8-820	ohm		1/2W	10%	Ins. Res.
63-1821	R11-6800	ohm		1/2W	20%	Ins. Res.
63-1828	R2-10K	ohm		1/2W	20%	Ins. Res.
63-1842	R17-22K	ohm		1/2W	20%	Ins. Res.
63-1856	R15-47K	ohm		1/2W	20%	Ins. Res.
63-1898	R9-470K	ohm		1/2W	20%	Ins. Res.
63-1926	R3-2.2	Megohm		1/2W	20%	Ins. Res.
63-1940	R7-4.7	Megohm		1/2W	20%	Ins. Res.
63-1961	R1-15	Megohm		1/2W	20%	Ins. Res.
63-1977	R12-150	ohm		1W	10%	Ins. Res.
63-2045	R10-Tone Control					
63-2046	R6-Volume Control & Switch					

Miscellaneous

11-104	Line Cord & Plug - 7 ft. long
26-437	Dial Scale
46-811	Tuning, Volume & Tone Control Knob (3 used)
46-844	Radio-Phono Switch Knob
49-669	SP-1-5 1/4" PM Speaker TS-2025 Output Transformer ZC-5091 Cone
52-538	Two Prong Receptacle & Cable
54-139	3/8-32 x 9/16" Palnut (1 ea. used on 85-465, 63-2045 & 63-2046)
57-1626	Chassis Cover Plate
59-250	Dial Pointer
70-117	#6 x 5/16" Phill. R.H.W.S. Steel Stat. Br. (8 used to Mt. 57-1626)
76-556	Tuning Control Shaft
78-229	Elect. Cond. Socket
78-644	Phono Connector Socket
78-709	Octal Tube Socket
78-806	Miniature Tube Socket (2 used)
78-807	Miniature Tube Socket (3 used)
78-808	Pilot Light Socket & Wire
80-69	Dial Cord Tension Spring
80-209	Dial Cord Tension Spring
85-465	S1-Phono-Radio Switch (or 85-466)
93-138	Felt Washer (used on S-16029)
93-392	3/32 x 33/64 x 1" Brown Felt Washer (4 used on Knobs)
94-295	Gang Mtg. Bushing
100-67	PL-1-Dial Light Bulb
114-297	#6 x 1/4" Hex. Hd. Sl. S.T. (2 used on 126-624)

Miscellaneous (Con't)

126-624	Heat Shield
139-71	Speaker Baffle (Rubber)
171-12	Pilot Light Lens
188-32	Retaining Ring (used on 76-556)
S-15708	Cobra Tone Arm Cartridge Assembly
S-15903	Dial Cord Assembly (Short)
S-15904	Dial Cord Assembly (Long)
S-16028	Pulley & Bushing Assembly
S-16029	Bracket & Stud Assembly
S-16419	Record Adapter Plug & Envelope Assembly

Cabinet Parts Model H665Z & H665RZ

14-1265	Cabinet for H665Z - Radio-Phono Table Model
14-1265R	Cabinet for H665RZ - Radio-Phono Table Model
16-639	Packing Carton
74-62	Speaker Screen
114-251	#10-32 x 5/8" Hex. Washer Hd. Sl. M.S. (4 used chassis mtg.)
114-291	#8-32 x 7/16" Hex. Hd. Sl. M.S. Steel (2 used on S-16029)
139-90	Speaker Baffle (Duron)
166-41	Rubber Bumper (used on gang)
202-839	Instruction Book (Radio & Phono)
S-14027	3 Speed Record Changer
S-17211	L1-Wavemagnet Assembly

Cabinet Parts Model H665 & H665R

14-1241	Cabinet for H665 Radio-Phono Table Model
14-1241R	Cabinet for H665R Radio-Phono
16-639	Packing Carton
19-123	Record Changer Mtg. Clip (4 used)
57-1481	Clamping Strip (2 used)
70-83	#6 x 1/2" Rd. Washer Hd. Wood St. Br. (6 used on Wavemagnet & 1 used 83-1671)
72-87	#6 x 5/8" Phil. F.H.W.S. Stat. Br. (8 used on dial scale mtg.)
72-91	#6 x 7/16" Phill. F.H.W.S. (1 used on each 57-1481)
74-62	Speaker Screen
80-407	Record Changer Mtg. Spring (4 used)
83-1671	Wavemagnet Terminal Strip
83-1737	Speaker Screen Retaining Strip
112-544	Record Changer Mtg. Screw (3 used)
114-40	#10-32 x 7/8" Hex. Washer Hd. (4 used chassis Mtg.)
139-90	Speaker Baffle (Duron)
166-46	Bumper (4 used)
202-833	Instruction Book
S-14031	Variable Speed Record Changer
S-17211	L1-Wavemagnet Assembly (or S-17314)

Cabinet Parts Model H661E & H661R

14-1281E	Cabinet for H661E Radio-Phono Table Model
14-1281R	Cabinet for H661R Radio-Phono Table Model
16-667	Packing Carton
19-123	Record Changer Mtg. Clip (4 used)
70-83	#6 x 1/2" Rd. Washer Hd. Wood Screw St. Br. (6 used to mt. S-17476)
72-87	#6 x 5/8 Phill. F.H.W.S. St. Br. (8 used to mt. Dial Scale & Baffle)
80-407	Record Changer Mtg. Spring (4 used)
83-1737	Speaker Screen Retaining Strip (4 used)
112-544	Record Changer Mtg. Screw (3 used)
114-40	#10-32 x 7/8" Hex. Washer Hd. Sl. (4 used chassis mtg.)
139-94	Speaker Baffle & Grille Cloth
166-46	Bumper (4 used)
202-833	Instruction Book (Radio & Phono)
S-14031	Variable Speed Record Changer
S-17475	L1-Wavemagnet Assembly H661R
S-17476	L1-Wavemagnet Assembly

©John F. Rider

Compliments of www.nucow.com

MODEL H724,
Ch. 7H02

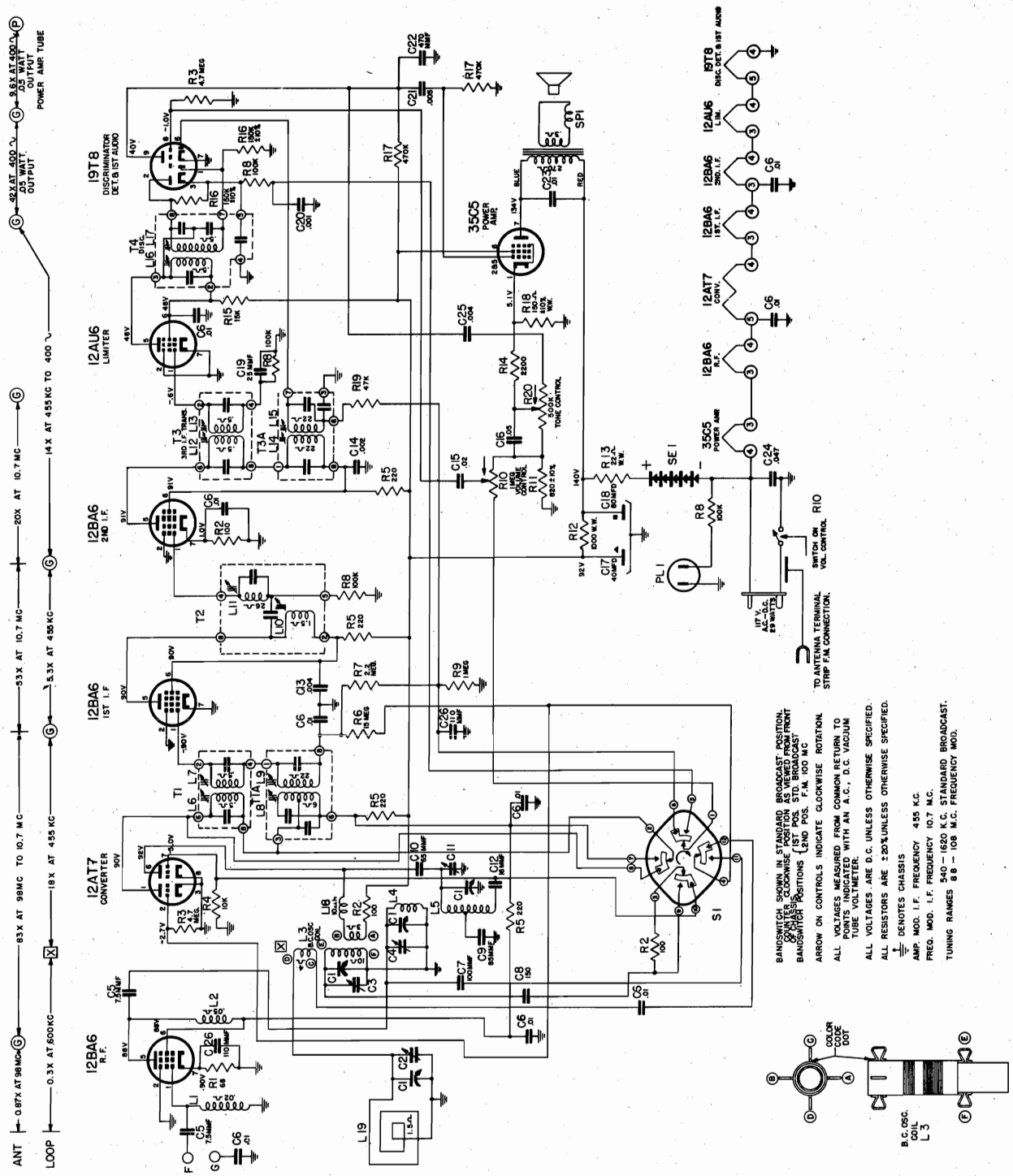

©John F. Rider

Compliments of www.nucow.com

The 7H02 chassis incorporates a superheterodyne circuit with two stages of IF, on the FM Band, and two stages on the AM Band. There is one stage of RF amplification on the FM Band.

When adjustments are made on the 7H02 or any AC-DC chassis, a line isolation transformer (110-V input to 110-V output) is recommended in order to avoid a "hot" chassis. If an isolation transformer is not available, check the AC voltage between chassis and bench ground, and if there is any indication of voltage, reverse the plug before handling the set.

The I.F. transformers and the discriminator transformer are the new permeability tuned type. The advantage of an IF transformer of this type is its extreme stability under various humidity and temperature conditions. The upper coil is the secondary and the lower the primary. When adjusting these IF and discriminator transformers, tuning wrench 68-19 can be inserted into the top slug, rotated until maximum output is obtained and then dropped down to the lower slug and the same operation repeated. The tuning wrench is so designed that turning one slug does not affect the adjustment of the other.

FM IF Alignment: Because of the wide band pass, it is desirable to use a FM signal generator and a cathode ray oscilloscope when aligning the FM IF channel. The instruction book for the Zenith Model 800 Signal Generator (Form Z8001) covers complete FM alignment procedure. If visual alignment equipment is unavailable, reasonably accurate alignment can be made by following the procedure outlined in this service note.

FM Discriminator Alignment: When the secondary of the discriminator is aligned (operation 5) use sufficient signal input to get a good positive and negative indication before setting the slug for zero reading. A center zero indicating meter is recommended for this adjustment, but is not absolutely necessary. Reversing the leads of a non-zero center meter, or observing closely when the meter starts to go to the left (negative) of zero will give the same results.

Alignment of this chassis will, in most cases, be unnecessary unless an IF or RF transformer is replaced or the adjustments have been tampered with.

Correct alignment can only be made if the following procedure is followed:

A vacuum tube voltmeter with an isolation resistor of 2,000,000 ohms in series with the hot lead will serve for FM adjustments. This lead should be shielded.

An AC output meter connected across the primary or secondary of the output transformer will be satisfactory for all AM adjustments.

The signal generator output should be kept just high enough to get an indication on the meter.
(a) Vacuum Tube Voltmeter Lug 7 on discriminator transformer to chassis (half discriminator load).
(b) Vacuum Tube Voltmeter Lug 5 on discriminator transformer to chassis (full discriminator load).
(c) Vacuum Tube Voltmeter from Limiter Grid to Chassis.
(d) Loosen Slugs by applying a hot iron to the cement.

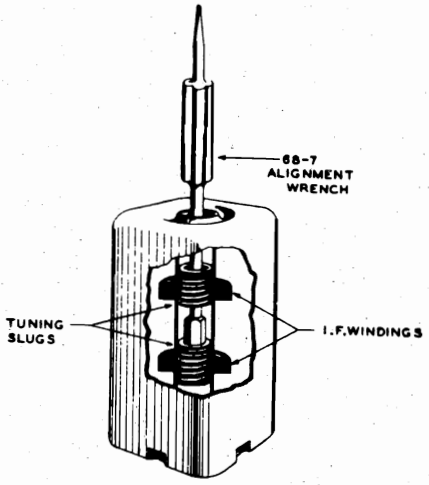

Detail of
IF Transformer

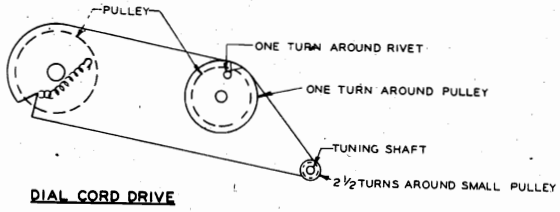

DIAL CORD DRIVE

©John F. Rider

Compliments of www.nucow.com

ALIGNMENT PROCEDURE

Operation	Connect Oscillator to	Dummy Antenna	Input Signal Frequency	Band	Set Dial To	Adj. Trimmers	Purpose
1	Pin 2 12AT7 Converter	.05 Mfd.	455 KC. Modulated	BC	600 Kc.	L8, 9,11,14,15	Align I. F. channel for maximum output.
2	2 turns loosely cpld. to wavemagnet		1600 Kc. Modulated	BC	1600 Kc.	C 3	Set oscillator to dial scale.
3	2 turns loosely cpld. to wavemagnet		1400 Kc. Modulated	BC	1400 Kc.	C 2	Align antenna stage.
4 (a)	Pin 1 (grid) on 12AU6 limiter.	.05 Mfd.	10.7 Mc. Unmodulated	FM 100		L16 coil slug Primary discr.	Align primary of discriminator for maximum reading.
5 (b)	Pin 1 (grid) on 12AU6 limiter.	.05 Mfd.	10.7 Mc. Unmodulated	FM 100		L17 coil slug sec. of discr.	Adjust secondary of discriminator for zero reading.
6 (c)	Pin 1 (grid) on 12BA6 2nd IF.	.05 Mfd.	10.7 Mc. Unmodulated	FM 100		L12 and L13 Prim. and Sec. of 3rd IF trans.	Align 3rd IF transformer for maximum reading.
7 (c)	Pin 1 (grid) on 12BA6 1st IF.	.05 Mfd.	10.7 Mc. Unmodulated	FM 100		L10 Prim. of 2nd IF transformer	Align 2nd IF transformer for maximum reading.
8 (c)	Pin 2 (grid) on 12AT7 converter tube socket.	.05 Mfd.	10.7 Mc. Unmodulated	FM 100		L6 and L7 Prim. and Sec. of 1st IF transformer.	Align 1st IF transformer for maximum reading.
9 (c)	Antenna Post FM (Remove line ant.)	270 ohms	98 Mc. Unmodulated	FM 100	98 Mc.	C11 Osc. Coil Slug	Set Oscillator to dial scale.
10 (c) (d)		270 ohms	98 Mc. Unmodulated	FM 100	98 Mc.	C4 Det. Coil Slug	Align det. stage to maximum reading.

TUBE AND TRIMMER LOCATION

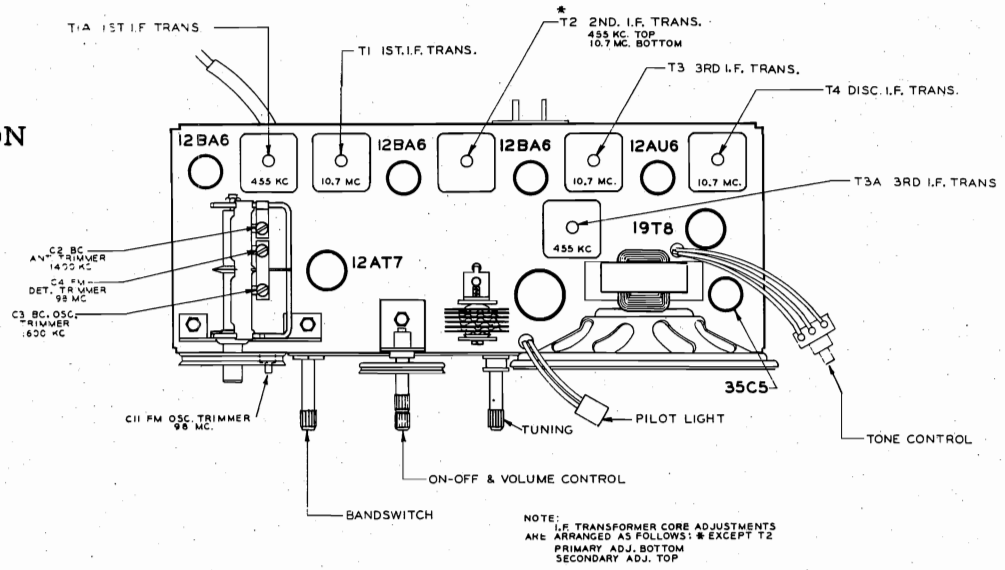

©John F. Rider

Compliments of www.nucow.com

PARTS LIST

PART NO.		DESCRIPTION	
		DIAL ASSEMBLY	
26-451		Dial Scale	
46-859		Band Switch Knob	
46-860		Tuning Control Knob	
46-900		Vol. Control Knob	
46-901		Tone Control Knob	
59-251		Dial Pointer	
78-904		Dial Light Socket Assem.	
80-69		Dial Cord Tension Spring	
100-105	PL1	Neon Indicator Bulb	
188-129		Retaining Ring (1 ea. used on S-17334 & S-17467)	
S-17334		Tuning Shaft & Pulley Assem.	
S-17336		Tuning Shaft Brkt. & Ins. Strip Assem.	
S-17350		Dial Cord & Eyelet Assem.	
S-17467		Pointer Shaft, Brkt. & Pulley Assem.	
		COILS & CHOKES	
20-329	L1	F. M. Antenna Coil	
20-330	L2	R. F. Plate Load Coil	
20-331	L4	F. M. Mixer Coil	
20-333	L18	R. F. Choke Coil	
95-1102	T3A	3rd. I. F. Trans. 455KC.	
95-1150	T1-T3	1st. & 3rd. I. F. Trans. 10.7 MC (2 Used)	
95-1153	T4	Discriminator Trans. 10.7 MC	
95-1250	T1A	1st. I. F. Trans. 455KC.	
95-1251	T2	2nd. I. F. Trans. 10.7 MC & 455KC	
S-17340	L3	B.C. Osc. Coil Assem.	
		CONDENSERS	
22-3	C6	.01 Mfd. Ceramic (9 Used	500V
22-4	C25	.004 Mfd. Ceramic	500V
22-5	C26	110 Mmfd. Ceramic (Disc) (or 22-1669) (2 Used)	500V
22-6	C22	470 Mmfd Ceramic	500V
22-229	C21	.005 Mfd.	500V
22-448	C13	.004 Mfd.	600V
22-830	C15	.02 Mfd.	600V
22-1126	C23	.01 Mfd.	400V
22-1158	C16	.05 Mfd.	200V
22-1220	C14	.002 Mfd.	600V
22-1507	C19	25 Mmfd. Ceramic	500V
22-1669	C7	100 Mmfd. Ceramic	500V
22-1675	C8	150 Mmfd. Ceramic	500V

PART NO.		DESCRIPTION	
		CONDENSERS (Cont'd.	
22-1676	C20	.001 Mfd. Ceramic	500V
22-1757	C17,C18	Elect. 40 Mfd. 150V - 80 Mfd	150V
22-1775	C24	.047 Mfd.	400V
22-1852	C5	7.5 Mmfd. Ceramic (2 Used)	500V
22-2253	C11	Trimmer Cond. (Slug Tuned)	
22-2255	C1	Variable Gang (2 Section BC - 2 Section FM)	
22-2256	C10	65 Mmfd. Ceramic	500V
22-2257	C12	16 Mmfd. Ceramic	500V
22-2258	C9	85 Mmfd. Ceramic	500V
		RESISTORS	
63-686	R18	150 Ohm W.W. 1/2W 10% Ins. Res.	
63-1450	R13	22 Ohm W.W. 1W 20% Ins. Res.	
63-1527	R12	1000 Ohm W.W. 3W 20% Ins. Res.	
63-1737	R1	68 Ohm 1/2W 20% Ins. Res.	
63-1744	R2	100 Ohm 1/2W 20% Ins. Res. (3 Used)	
63-1758	R5	220 Ohm 1/2W 20% Ins. Res. (4 Used)	
63-1782	R11	820 Ohm 1/2W 10% Ins. Res.	
63-1800	R14	2200 Ohm 1/2W 20% Ins. Res.	
63-1828	R4	10K Ohm 1/2W 20% Ins. Res.	
63-1835	R15	15K Ohm 1/2W 20% Ins. Res.	
63-1856	R19	47K Ohm 1/2W 20% Ins. Res.	
63-1870	R8	100K Ohm 1/2W 20% Ins. Res. (4 Used)	
63-1876	R16	150K Ohm 1/2W 10% Ins. Res. (2 Used)	
63-1898	R17	470K Ohm 1/2W 20% Ins. Res. (2 Used)	
63-1912	R9	1 Megohm 1/2W 20% Ins. Res.	
63-1926	R7	2.2 Megohm 1/2W 20% Ins. Res.	
63-1940	R3	4.7 Megohm 1/2W 20% Ins. Res. (2 Used)	
63-1961	R6	15 Megohm 1/2W 20% Ins. Res.	
63-2143	R10	Volume Control & Switch	
63-2144	R20	Tone Control	
		MISCELLANEOUS	
11-85		Line Cord & Plug (6 ft. lg.)	
12-1070		Wavemagnet Mtg. Brkt.	
14-1273		Plastic Cabinet for H724 Table Model	
16-657		Packing Carton	
24-535		Line Cord Plug Cover	
43-165		Handle Housing	
49-689	SP1	5 1/4" PM Speaker ZC5091 Cone & Voice Coil	
54-129		Speed Nut (9 Used on Mtg. Grill & Baffle)	

PART NO.		DESCRIPTION
		MISCELLANEOUS Cont'd.
54-271		6-32 X 1/4" Palnut Steel Cad. (1 used on ea. I.F.)
54-305		3/8-32 X 9/16" Panut St. Br. (Chassis Mtg.)
57-1686		Emblem Plate
57-1690		Emblem Mtg. Plate
58-188		Two Prong Plug (AC)
78-787		Two Contact Socket (Cabt. Back)
78-806		Miniature Tube Socket
78-807		Miniature Tube Socket
78-869		Miniature Tube Socket
78-870		Miniature Tube Socket (2 Used)
78-871		Miniature Tube Socket
78-903		Miniature Tube Socket
83-1056		Wavemagnet Mtg. Strip
83-1393		Rubber Strip (Handle)
83-1789		Rubber Strip (Rubber)
83-1829		Insulator Strip
85-493		Band Switch
93-487	S1	1/16 X .144 X 3/8" Steel Washer Cad. (2 Used on 43-165)
97-293		Chassis Mtg. Stud (2 Used)
110-152		Grill Cloth
112-281		#10 X 3/4" Oval Binding Hd. S.T. St. Br. (2 Used Chassis Mtg.)
114-78		#8 X 5/16 Hex Hd. S1. S.T. (Used on S-17364)
114-261		#6 X 3/8 Hex Hd. S1. S.T. (2 Used on 43-165)
114-356		#6-32 X 1-1/4" Hex Hd. S.T. (Used on 212-7)
138-42		Cabinet Grille
139-91		Speaker Baffle
149-89		Iron Core (Used on S-17340)
159-69		Plug Button (4 Used to mt. Back)
171-11		Pilot Light Jewel
194-22		Insulator
196-153		Speaker Gasket
199-103		Flexible Handle Sleeve
202-697		F.M. Inst. Book
202-842		Instruction Book
212-7	SE1	Selenium Rectifier
S-13210		Strap & Rivet Assem. (Handle)
S-14527		Wavemagnet Lead & Stop Assem.
S-17364	L19	Wavemagnet Assem.
S-17366		Cabinet Back Assem. (Complete)

©John F. Rider

Compliments of www.nucow.com

MODEL H880R,
Ch. 8H20, Rev.

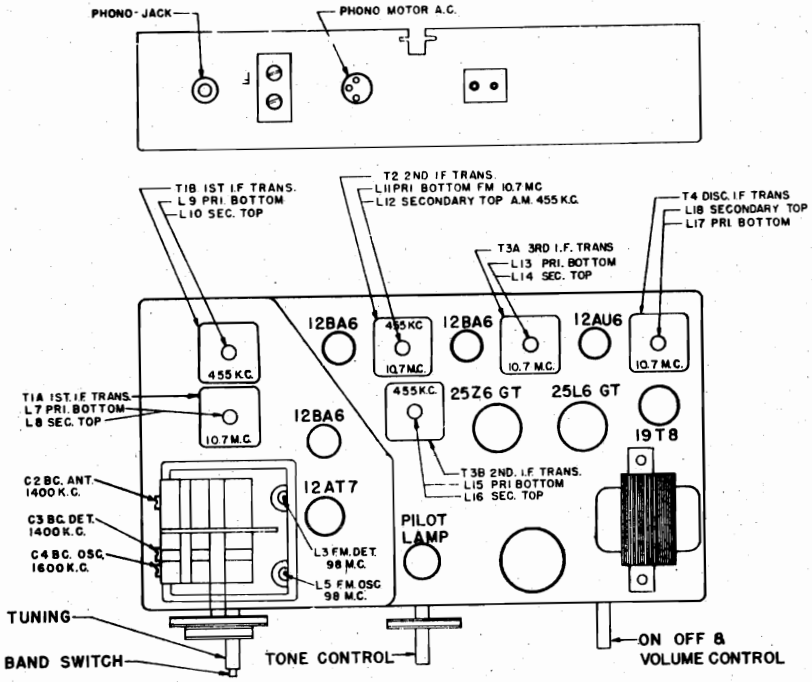

TUBE AND TRIMMER LOCATION

The 8H20 revised chassis incorporates a superheterodyne circuit with two stages of IF, on the FM Band, and one stage on the AM Band. There is one stage of RF amplification on all Bands.

When adjustments are made on the 8H20 revised chassis, a line isolation transformer (110 V input to 110V output) is recommended in order to avoid a "hot" chassis. If an isolation transformer is not available, check the AC voltage between chassis and bench ground and if there is any indication of voltage, reverse the plug before handling the set.

FM RF Alignment: The tuning slugs are attached to threaded shafts and the slugs are varied in the field of the coils by turning the shafts clockwise or counter-clockwise. After adjustment the shafts must be secured with a drop of speaker cement.

AM and FM IF Alignment: The AM and FM IF transformers in this receiver are of the new permeability tuned type. The advantage of an I F transformer of this type is its extreme stability under various humidity and temperature conditions. The upper coil is the secondary and the lower the primary. When adjusting these I F transformers the tuning wrench 68-7 can be inserted into the top slug, rotated until maximum output is obtained and then dropped down to the lower slug and the same operation repeated. The tuning wrench is so designed that turning one slug does not affect the adjustment of the other.

FM IF Alignment: Because of the wide band pass, it is desirable to use a FM signal generator and a cathode ray oscilloscope when aligning the FM IF channel. The instruction book for the Zenith Model 800 Signal Generator (Form Z8001) covers complete FM alignment procedure. If visual alignment equipment is unavailable, reasonably accurate alignment can be made by following the procedure outlined below.

FM Discriminator Alignment: When the secondary of the discriminator is aligned (operation 5) use sufficient signal input to get a good positive and negative indication before setting the slug for zero reading. A center zero indicating meter is recommended for this adjustment, but is not absolutely necessary. Reversing the leads of a non-zero center meter, or observing closely when the meter starts to go to the left (negative) of zero will give the same results.

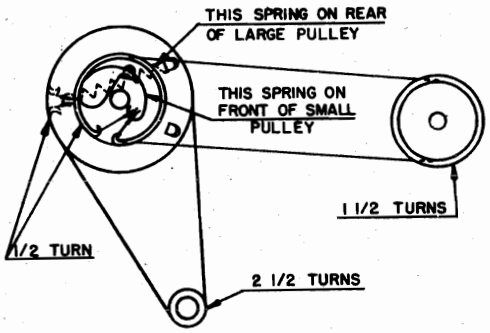

DIAL CORD DRIVE

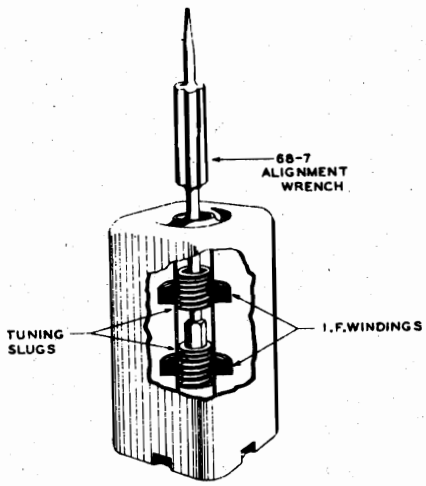

Detail of
IF Transformer

©John F. Rider

Compliments of www.nucow.com

ALIGNMENT PROCEDURE

Operation	Connect Oscillator To	Dummy Antenna	Input Signal Frequency	Band	Set Dial To	Adj. Trimmers	Purpose
1	Pin 2 12AT7 Converter	.05 Mfd.	455 Kc. Modulated	BC	600 Kc.	L9, 10, 12 15 & 16	Align I. F. channel for maximum output.
2	2 turns loosely cpld. to wavemagnet		1600 Kc. Modulated	BC	1600 Kc.	C4	Set oscillator to dial scale.
3	2 turns loosely cpld. to wavemagnet		1400 Kc. Modulated	BC	1400 Kc.	C3, C2	Align detector and antenna stage.
4 (a)	Pin 1 (grid) on 12AU6 limiter.	.05 Mfd.	10.7 Mc. Unmodulated	FM 100		L17 coil slug Primary discr.	Align primary of discriminator for maximum reading.
5 (b)	Pin 1 (grid) on 12AU6 limiter.	.05 Mfd.	10.7 Mc. Unmodulated	FM 100		L18 coil slug sec. of discr.	Adjust secondary of discriminat-or for zero reading.
6 (c)	Pin 1 (grid) on 12BA6 2nd. I F.	.05 Mfd.	10.7 Mc. Unmodulated	FM 100		L13 and L14 Pri. & Sec. of 3rd. IF trans.	Align 3rd. IF transformer for maximum reading.
7 (c)	Pin 1 (grid) on 12BA6 1st. IF.	.05 Mfd.	10.7 Mc. Unmodulated	FM 100		Adjust L11 for maximum reading.	Align 2nd IF transformer for maximum reading.
8 (c)	Pin 2 (grid) on 12AT7 converter tube socket.	.05 Mfd.	10.7 Mc. Unmodulated	FM 100		L7 and L8 Prim. and Sec. of 1st. IF transformer.	Align 1st. IF transformer for maximum reading.
9 (c)	Antenna Post FM (Re-move line ant.)	270 ohms	98 Mc. Unmodulated	FM 100	98 Mc.	L5 Osc. Coil Slug.	Set Oscillator to dial scale.
10 (c) (d)		270 ohms	98 Mc. Unmodulated	FM 100	98 Mc.	L3 Det. Coil Slug	Align det. stage to maximum reading.

Alignment of this chassis will in most cases be unnecessary unless an IF or RF transformer is replaced or the adjustments have been tampered with.

Correct alignment can only be made if the following procedure is followed:

A vacuum tube voltmeter with an isolation resistor of 2,000,000 ohms in series with the hot lead will serve for FM adjustments. This lead should be shielded.

An AC output meter connected across the primary or secondary of the output transformer will be satisfactory for all AM adjustments.

The signal generator output should be kept just high enough to get an indication on the meter.

(a) Vacuum Tube Voltmeter Lug 7 on discriminator transformer to chassis (half discriminator load).

(b) Vacuum Tube Voltmeter Lug 5 on discriminator transformer to chassis (full discriminator load).

(c) Vacuum Tube Voltmeter from Limiter Grid to Chassis.

(d) Loosen Slugs by applying a hot iron to the cement.

Dial Assembly

54-292	Speed Nut (used on S-17165)
78-895	Dial Light Socket & Wire
80-69	Dial Cord Spring
80-746	Pulley Retaining Spring
80-747	Dial Cord Spring
80-781	Tuner Arm Tension Spring
94-732	Pointer Pulley Bushing (Part of S-17165)
100-97 PL-1	Pilot Light Bulb
114-262	#8 x 7/16" Hex Hd. Sl. S.T. (2 used to mount S-17149)
114-297	#6 x 1/4" Hex Hd. Sl. S.T. (2 used to mount S-17165)
148-122	Tuner Arm
188-30	Retaining Ring (used on S-17155)
S-17149	Dial Scale & Bracket Assembly (26-449 & 26-450)
S-17155	Tuning Shaft & Pulley Assembly
S-17157	Pointer & Pulley Assembly
S-17158	Dial Cord & Eyelet Assembly (Long)
S-17159	Dial Cord & Eyelet Assembly (Short)
S-17165	Bracket & Pulley Bushing Assembly

©John F. Rider

Compliments of www.nucow.com

MODEL H880R,
Ch. 8H20, Rev.

Coils & Chokes

95-1251	T2	2nd. IF Transformer 10.7 Mc & 455 Kc
95-1102	T3B	3rd. IF Transformer
95-1150	T3B	3rd. IF Transformer
95-1153	T4	Disc. Transformer
95-1248	T1B	1st. IF Transformer
95-1201	T1A	1st. IF Transformer
S-12603	L18	Phono Oscillator Coil
S-15691	L5	F.M. Oscillator Coil Assembly
S-15743	L3	F.M. Detector Coil Assembly
S-16344	L4	Broadcast Det. Coil Assembly
S-16345	L6	Broadcast Osc. Coil Assembly
S-16408	L2	Antenna Choke Coil Assembly

Condensers

22-3	C7	.01 Mfd. Ceramic (10 used)	500V
22-4	C21	.004 Mfd. Ceramic	500V
22-5	C8	110 Mmfd. Ceramic (or 22-1669) (3 used)	500V
22-177	C19	.2 Mfd.	400V
22-448	C17	.004 Mfd.	600V
22-669	C22	.01 Mfd.	600V
22-927	C15	.1 Mfd.	600V
22-829	C5	.05 Mfd. (3 used)	200V
22-854	C24	.0005Mfd.	600V
22-1220	C14	.002 Mfd.	600V
22-1367	C13	50 Mmfd. Ceramic (2 used)	500V
22-1506	C10	22 Mmfd. Ceramic (2 used)	500V
22-1676	C11	.001 Mfd. Ceramic (4 used)	500V
22-1705	C9	30 Mmfd. Ceramic	500V
22-1717	C20	.001 Mfd.	200V
22-1762	C12	1 Mmfd.(molded) (Ceramic)	500V
22-1775	C18	.047 Mfd.	400V
22-2104	C1	Variable - 3 Section	
22-2105	C26,27	Elect. 80-40 Mfd. 250V	
22-2140	C6	15 Mmfd. Ceramic (3 used)	500V
22-2154	C25	Elect. Cond. 10 Mfd. 250V	
22-2240	C16	Trimmer Condenser	
22-1507	C28	25 Mmfd. Ceramic	500V

Resistors

63-1726	R33	39 ohm	1/2W	10%	Ins.	Res.
63-1737	R2	68 ohm	1/2W	20%	Ins.	Res.
63-1744	R14	100 ohm	1/2W	20%	Ins.	Res.
63-1758	R1	220 ohm	1/2W	20%	Ins.	Res. (5 used)
63-1768	R4	390 ohm	1/2W	10%	Ins.	Res.
63-1772	R6	470 ohm	1/2W	20%	Ins.	Res.
63-1782	R21	820 ohm	1/2W	10%	Ins.	Res.
63-1806	R25	3300ohm	1/2W	10%	Ins.	Res.
63-1814	R17	4700ohm	1/2W	20%	Ins.	Res.
63-1827	R5	10K ohm	1/2W	10%	Ins.	Res.
63-1828	R29	10K ohm	1/2W	20%	Ins.	Res.
63-1834	R28	15K ohm	1/2W	10%	Ins.	Res.
63-1845	R24	27K ohm	1/2W	10%	Ins.	Res.
63-1856	R10	47K ohm	1/2W	20%	Ins.	Res. (3 used)
63-1863	R16	68K ohm	1/2W	20%	Ins.	Res.
63-1869	R31	100Kohm	1/2W	10%	Ins.	Res.
63-1870	R20	100Kohm	1/2W	20%	Ins.	Res.
63-1876	R30	150Kohm	1/2W	10%	Ins.	Res. (2 used)
63-1884	R8	220Kohm	1/2W	20%	Ins.	Res. (2 used)
63-1898	R9	470Kohm	1/2W	20%	Ins.	Res. (3 used)
63-1912	R12	1 Megohm	1/2W	20%	Ins.	Res. (2 used)
63-1926	R7	2.2 "	1/2W	20%	Ins.	Res.
63-1940	R32	4.7 "	1/2W	20%	Ins.	Res.
63-1947	R3	6.8 "	1/2W	20%	Ins.	Res. (2 used)
63-1954	R13	10 "	1/2W	20%	Ins.	Res.
63-1981	R26	120 ohm	1W	10%	Ins.	Res.
63-2068	R18,19	Candohm - Two Section				
63-2091	R15	820 ohm	W.W. 1/2W	20%	Ins.	Res.
63-2093	R27	47 ohm	W.W. 1W	10%	Ins.	Res.
63-2131	R22	Volume Control & Switch				
63-2132	R11	Tone Control				

Miscellaneous

44-25		Phono Jack
54-139		3/8-32 x 9/16 Palnut Cad. (1 ea. used on 63-2131 & 63-2132)
54-271		6-32 x 1/4" Palnut Steel Cad. (1ea. used on 95-1102, 95-1150, 95-1152 & 95-1153)
58-128		Two Prong Plug (A-C Interlock)
78-755		Octal Tube Socket (2 used)
78-807		Miniature Tube Socket
78-854		Miniature Tube Socket (9 contact)
78-869		Miniature Tube Socket
78-870		Miniature Tube Socket (2 used)
78-871		Miniature Tube Socket
78-896		Three Contact Socket
80-780		Iron Core Tension Spring
85-489	S-1	Band Switch
93-993		Insulating Washer (used on 63-2132)
93-1039		Gang Mtg. Cup Washer (2 used)
95-1188	T6	Auto Trans.
95-1189	T5	Speaker Output Trans.
149-95		Iron Core & Spring
S-16838		Speaker Cable & Eyelet Assembly

Cabinet Parts

2-196		Cabinet Back (Phono Section)
11-106		Line Cord & Plug (9 ft. long)
14-1254R		Cabinet for H880R Console Comb. Model
14-1254		Cabinet for H880 Console Combination Model
16-632		Packing Carton
19-169		Record Changer Mounting Clip
46-872		Dummy Knob
46-873		Tone Control Knob
46-876		Tuning Knob
46-877		Volume Control Knob
46-899		Band Switch Knob
49-688	SP-1	10" P.M. Speaker ZC-1061 Cone
57-1481		Esc. Clamping Ring (4 used)
57-1658		Escutcheon
70-86		#6 x 5/8 Washer Hd. Wood Screw Steel Stat. Br. (12 used) to Mt. Backs)
78-847		Two Contact Socket
80-604		Hinge Spring (2 used)
93-1059		Felt Washer (used on 46-873)
97-293		Chassis Mtg. Ins. Stud (3 used)
112-809		Record Changer Mtg. Screw (3 used)
114-128		#10 x 1/16" Hex Washer Hd. S.T. (3 used Chassis Mtg.)
114-350		#8 x 7/16" Hex Hd. Sl. S.T. (4 used on 57-1658)
125-56		Rubber Grommet (4 used Speaker Mtg.)
156-35		Bullet Catch
159-50		Cinch Plug Button (4 used on 192-138)
165-9		Glides (2 used)
165-14		Glides (2 used)
188-54		Knob Clamping Ring (46-876)
192-138		Dial Glass
202-697		F.M. Instruction Book
202-828		Radio & Phono Instruction Book
S-14029		Record Changer Variable Speed
S-15536		Record Changer Compt. Hinge Brkt. & Link Assembly (2 used)
S-15780		Cobra Tone Arm Cartridge Assembly
S-17005		Record Changer Mtg. Frame & Arm Assembly
S-16419		Package of 6 - 45 RPM Center Hole Adaptors
S-16841	L1	Low Impedance Loop & Clip Assembly
S-17167		Volume Control Knob Assembly
S-17169		Cabinet Back Assembly (Radio Section)
S-17328	L19	Loop Loading Coil Assembly

©John F. Rider

Compliments of www.nucow.com

MODEL H880R,
Ch. 8H20,
Rev.

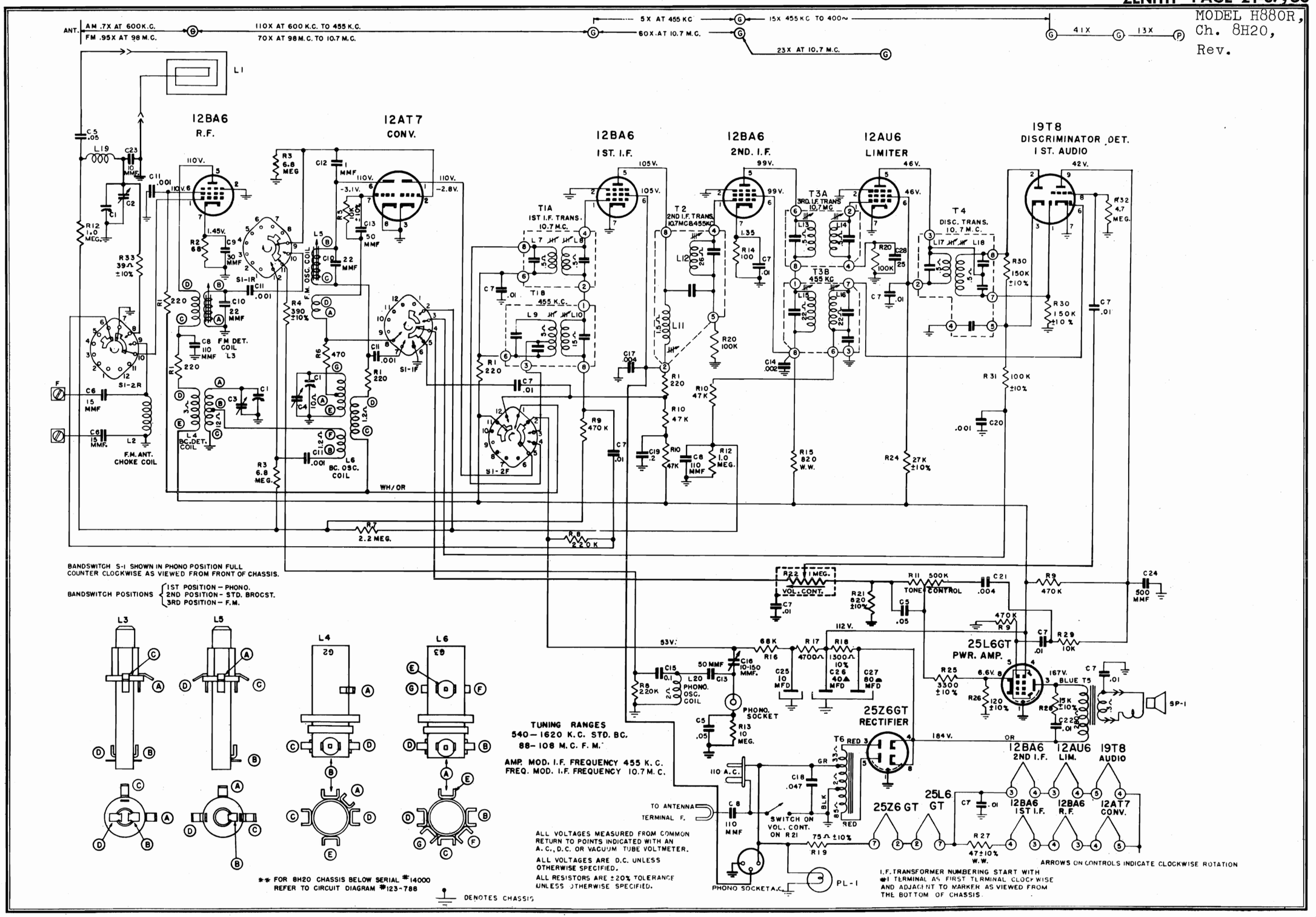

©John F. Rider

Compliments of www.nucow.com

MODEL H880RZ
Ch. 8H20

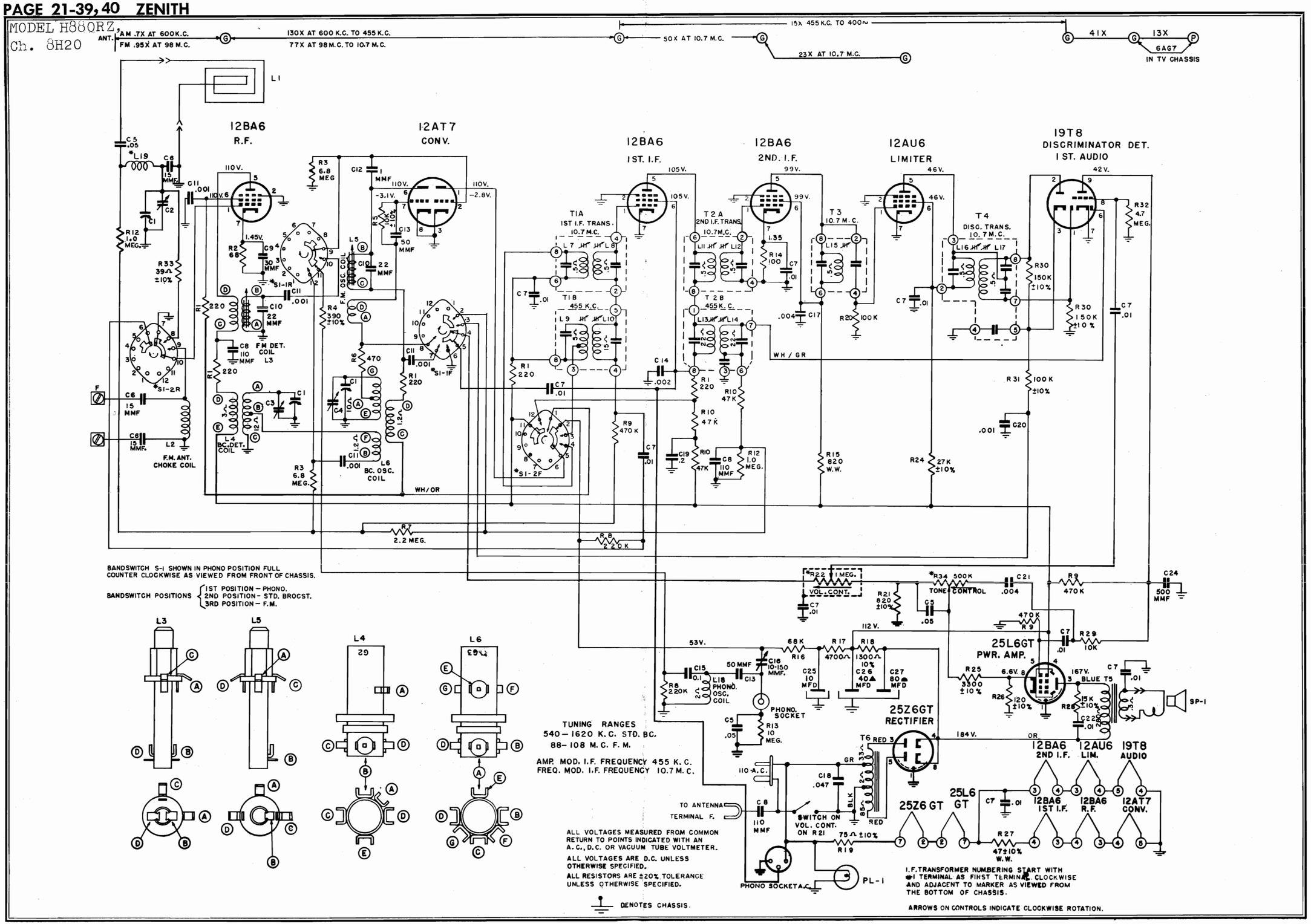

©John F. Rider

Compliments of www.nucow.com

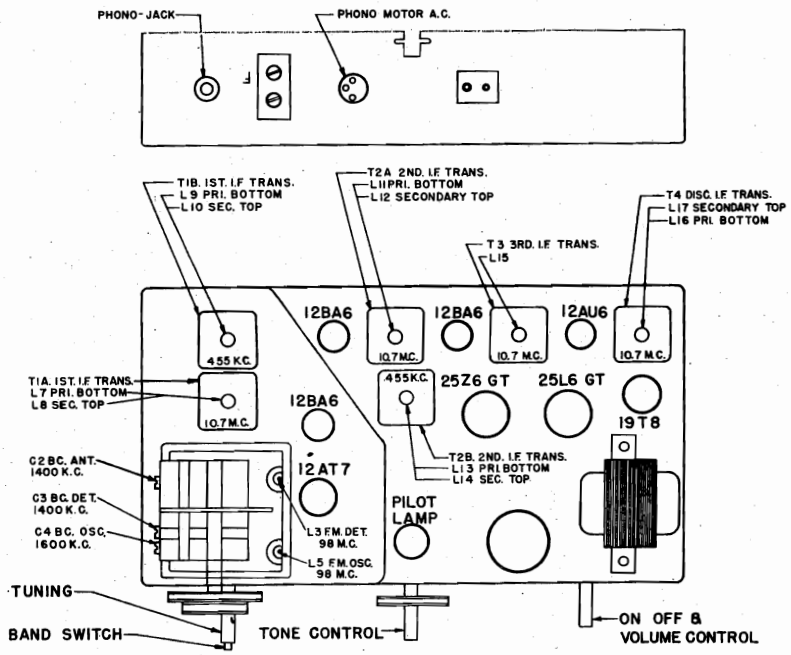

TUBE AND TRIMMER LOCATION

The 8H20 chassis incorporates a superheterodyne circuit with two stages of IF, on the FM Band, and one stage on the AM Band. There is one stage of RF amplification on all Bands.

When adjustments are made on the 8H20 chassis, a line isolation transformer (110 V input to 110V output) is recommended in order to avoid a "hot" chassis. If an isolation transformer is not available, check the AC voltage between chassis and bench ground and if there is any indication of voltage, reverse the plug before handling the set.

FM RF Alignment: The tuning slugs are attached to threaded shafts and the slugs are varied in the field of the coils by turning the shafts clockwise or counter-clockwise. After adjustment the shafts must be secured with a drop of speaker cement.

AM and FM IF Alignment: The AM and FM IF transformers in this receiver are of the new permeability tuned type. The advantage of an I F transformer of this type is its extreme stability under various humidity and temperature conditions. The upper coil is the secondary and the lower the primary. When adjusting these I F transformers the tuning wrench 68-7 can be inserted into the top slug, rotated until maximum output is obtained and then dropped down to the lower slug and the same operation repeated. The tuning wrench is so designed that turning one slug does not affect the adjustment of the other.

FM IF Alignment: Because of the wide band pass, it is desirable to use a FM signal generator and a cathode ray oscilloscope when aligning the FM IF channel. The instruction book for the Zenith Model 800 Signal Generator (Form Z8001) covers complete FM alignment procedure. If visual alignment equipment is unavailable, reasonably accurate alignment can be made by following the procedure outlined below.

FM Discriminator Alignment: When the secondary of the discriminator is aligned (operation 5) use sufficient signal input to get a good positive and negative indication before setting the slug for zero reading. A center zero indicating meter is recommended for this adjustment, but is not absolutely necessary. Reversing the leads of a non-zero center meter, or observing closely when the meter starts to go to the left (negative) of zero will give the same results.

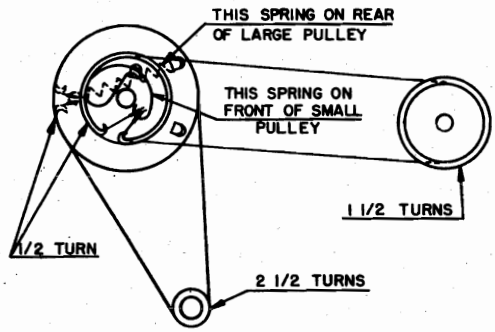

DIAL CORD DRIVE

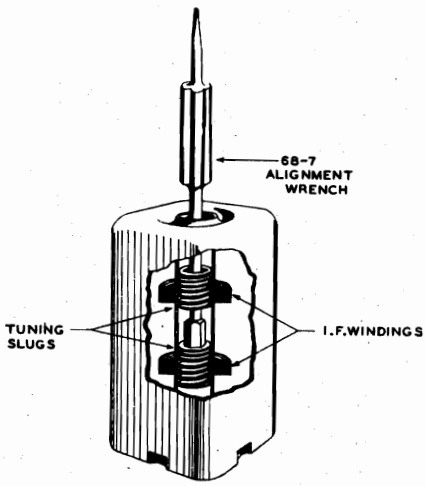

Detail of
IF Transformer

©John F. Rider

Compliments of www.nucow.com

ALIGNMENT PROCEDURE

Operation	Connect Oscillator To	Dummy Antenna	Input Signal Frequency	Band	Set Dial To	Adj. Trimmers	Purpose
1	Pin 2 12AT7 Converter	.05 Mfd.	455 Kc. Modulated	BC	600 Kc.	L9, 10, 13, 14	Align I. F. channel for maximum output.
2	2 turns loosely cpld. to wavemagnet		1600 Kc. Modulated	BC	1600 Kc.	C4	Set oscillator to dial scale.
3	2 turns loosely cpld. to wavemagnet		1400 Kc. Modulated	BC	1400 Kc.	C3, C2	Align detector and antenna stage.
4 (a)	Pin 1 (grid) on 12AU6 limiter.	.05 Mfd.	10.7 Mc. Unmodulated	FM 100		L16 coil slug Primary discr.	Align primary of discriminator for maximum reading.
5 (b)	Pin 1 (grid) on 12AU6 limiter.	.05 Mfd.	10.7 Mc. Unmodulated	FM 100		L17 coil slug sec. of discr.	Adjust secondary of discriminator for zero reading.
6 (c)	Pin 1 (grid) on 12BA6 2nd. I F.	.05 Mfd.	10.7 Mc. Unmodulated	FM 100		L15 Prim. of 3rd. IF trans.	Align 3rd. IF transformer for maximum reading.
7 (c)	Pin 1 (grid) on 12BA6 1st. IF.	.05 Mfd.	10.7 Mc. Unmodulated	FM 100		L11 and L12 Prim. and Sec. of 2nd. IF transformer.	Align 2nd IF transformer for maximum reading.
8 (c)	Pin 2 (grid) on 12AT7 converter tube socket.	.05 Mfd.	10.7 Mc. Unmodulated	FM 100		L7 and L8 Prim. and Sec. of 1st. IF transformer.	Align 1st. IF transformer for maximum reading.
9 (c)	Antenna Post FM (Remove line ant.)	270 ohms	98 Mc. Unmodulated	FM 100	98 Mc.	L5 Osc. Coil Slug.	Set Oscillator to dial scale.
10 (c) (d)		270 ohms	98 Mc. Unmodulated	FM 100	98 Mc.	L3 Det. Coil Slug	Align det. stage to maximum reading.

IMPORTANT

Alignment of this chassis will in most cases be unnecessary unless an IF or RF transformer is replaced or the adjustments have been tampered with.

Correct alignment can only be made if the following procedure is followed:

A vacuum tube voltmeter with an isolation resistor of 2,000,000 ohms in series with the hot lead will serve for FM adjustments. This lead should be shielded.

An AC output meter connected across the primary or secondary of the output transformer will be satisfactory for all AM adjustments.

The signal generator output should be kept just high enough to get an indication on the meter.

(a) Vacuum Tube Voltmeter Lug 7 on discriminator transformer to chassis (half discriminator load).

(b) Vacuum Tube Voltmeter Lug 5 on discriminator transformer to chassis (full discriminator load).

(c) Vacuum Tube Voltmeter from Limiter Grid to Chassis.

(d) Loosen Slugs by applying a hot iron to the cement.

©John F. Rider

Compliments of www.nucow.com

MODEL H880RZ,
Ch. 8H20

PARTS LIST

DIAL ASSEMBLY

54-292		Speed Nut (used on S-17165)
78-895		Dial Light Socket & Wire
80-69		Dial Cord Spring
80-746		Pulley Retaining Spring
80-747		Dial Cord Spring
80-781		Tuner Arm Tension Spring
94-732		Pointer Pulley Bushing (Part of S-17165)
100-97	PL-1	Pilot Light Bulb
114-262		#8 x 7/16" Hex. Hd. Sl. S.T. (2 used to Mount S-17149)
114-297		#6 x 1/4" Hex. Hd. Sl. S.T. (2 used to Mount S-17165)
148-122		Tuner Arm
188-30		Retaining Ring (used on S-17155)
S-17149		Dial Scale & Bracket Assembly (26-449 & 26-450)
S-17155		Tuning Shaft & Pulley Assembly
S-17157		Pointer & Pulley Assembly
S-17158		Dial Cord & Eyelet Assembly (Long)
S-17159		Dial Cord & Eyelet Assembly (Short)
S-17165		Bracket & Pulley Bushing Assembly

COILS & CHOKES

95-1102	T2B	2nd. I. F. Transformer
95-1150	T2A	2nd. I. F. Transformer
95-1152	T3	3rd. I. F. Transformer
95-1153	T4	Disc. Transformer
95-1200	T1B	1st. I. F. Transformer
95-1201	T1A	1st. I. F. Transformer
S-12603	L18	Phono Oscillator Coil
S-15691	L5	F. M. Oscillator Coil Assembly
S-15743	L3	F. M. Detector Coil Assembly
S-16344	L4	Broadcast Det. Coil Assembly
S-16345	L6	Broadcast Osc. Coil Assembly
S-16408	L2	Antenna Choke Coil Assembly

CONDENSERS

22-3	C7	.01	Mfd.	Ceramic	(10 used)	500V
22-4	C21	.004	Mfd.	Ceramic		500V
22-5	C8	110	Mmfd.	Ceramic (or 22-1669)	(3 used)	500V
22-177	C19	.2	Mfd.			400V
22-448	C17	.004	Mfd.			600V
22-669	C22	.01	Mfd.			600V
22-827	C15	.1	Mfd.			600V
22-829	C5	.05	Mfd.		(3 used)	200V
22-854	C24	.0005	Mfd.			600V
22-1220	C14	.002	Mfd.			600V
22-1367	C13	50	Mmfd.	Ceramic	(2 used)	500V
22-1506	C10	22	Mmfd.	Ceramic	(2 used)	500V
22-1676	C11	.001	Mfd.	Ceramic	(4 used)	500V
22-1705	C9	30	Mmfd.	Ceramic		500V
22-1717	C20	.001	Mfd.			200V
22-1762	C12	1	Mmfd.	(Molded) Ceramic		500V
22-1775	C18	.047	Mfd.			400V
22-2104	C1	Variable - 3 Section				
22-2105	C26,27	Elect. 80-40 Mfd. 250V				
22-2140	C6	15	Mmfd.	Ceramic	(3 used)	500V
22-2154	C25	Elect. Cond. 10 Mfd. 250V				
22-2240	C16	Trimmer Condenser				

RESISTORS

63-1726	R33	39	Ohm	1/2W	10%	Ins.	Res.
63-1737	R2	68	Ohm	1/2W	20%	Ins.	Res.
63-1744	R14	100	Ohm	1/2W	20%	Ins.	Res.
63-1758	R1	220	Ohm	1/2W	20%	Ins.	Res. (5 used)
63-1768	R4	390	Ohm	1/2W	10%	Ins.	Res.
63-1772	R6	470	Ohm	1/2W	20%	Ins.	Res.
63-1782	R21	820	Ohm	1/2W	10%	Ins.	Res.
63-1806	R25	3300	Ohm	1/2W	10%	Ins.	Res.
63-1814	R17	4700	Ohm	1/2W	20%	Ins.	Res.
63-1827	R5	10K	Ohm	1/2W	10%	Ins.	Res.
63-1828	R29	10K	Ohm	1/2W	20%	Ins.	Res.
63-1834	R28	15K	Ohm	1/2W	10%	Ins.	Res.
63-1845	R24	27K	Ohm	1/2W	10%	Ins.	Res.
63-1856	R10	47K	Ohm	1/2W	20%	Ins.	Res. (3 used)
63-1863	R16	68K	Ohm	1/2W	20%	Ins.	Res.
63-1869	R31	100K	Ohm	1/2W	10%	Ins.	Res.
63-1870	R20	100K	Ohm	1/2W	20%	Ins.	Res.

RESISTORS Continued

63-1876	R30	150K	Ohm	1/2W	10%	Ins.	Res. (2 used)
63-1884	R8	220K	Ohm	1/2W	20%	Ins.	Res. (2 used)
63-1898	R9	470K	Ohm	1/2W	20%	Ins.	Res. (3 used)
63-1912	R12	1	Megohm	1/2W	20%	Ins.	Res. (2 used)
63-1926	R7	2.2	"	1/2W	20%	Ins.	Res.
63-1940	R32	4.7	"	1/2W	20%	Ins.	Res.
63-1947	R3	6.8	"	1/2W	20%	Ins.	Res. (2 used)
63-1954	R13	10	"	1/2W	20%	Ins.	Res.
63-1981	R26	120	Ohm	1W	10%	Ins.	Res.
63-2068	R18,19	Candohm - Two Section					
63-2091	R15	820	Ohm W.W.	1/2W	20%	Ins.	Res.
63-2093	R27	47	Ohm W.W.	1W	10%	Ins.	Res.
63-2131	R22	Volume Control & Switch					
63-2132	R34	Tone Control					

MISCELLANEOUS

44-25		Phono Jack
54-139		3/8-32 x 9/16 Palnut Cad. (1 ea. used on 63-2131 & 63-2132)
54-271		6-32 x 1/4" Palnut Steel Cad. (1 ea. used on 95-1102, 95-1150, 95-1152 & 95-1153)
58-128		Two Prong Plug (A-C Interlock)
78-755		Octal Tube Socket (2 used)
78-807		Miniature Tube Socket
78-854		Miniature Tube Socket (9 Contact)
78-869		Miniature Tube Socket
78-870		Miniature Tube Socket (2 used)
78-871		Miniature Tube Socket
78-896		Three Contact Socket
80-780		Iron Core Tension Spring
85-489	S-1	Band Switch
93-993		Insulating Washer (used on 63-2132)
93-1039		Gang Mtg. Cup Washer (2 used)
95-1188	T6	Auto Trans.
95-1189	T5	Speaker Output Trans.
149-95		Iron Core & Spring
S-16838		Speaker Cable & Eyelet Assembly

CABINET PARTS

2-196		Cabinet Back (Phono Section)
11-106		Line Cord & Plug (9 ft. long)
14-1268R		Cabinet for H880RZ Console Comb. Model
16-632		Packing Carton
46-873		Tone Control Knob
46-876		Tuning Knob
46-899		Band Switch Knob
49-688	SP-1	10" P. M. Speaker
		ZC-1061 Cone
57-1481		Esc. Clamping Ring (4 used)
57-1658		Escutcheon
70-86		#6 x 5/8 Washer Hd. Wood Screw Steel Stat. Br. (12 used)to Mt. Backs)
78-847		Two Contact Socket
80-604		Hinge Spring (2 used)
93-1059		Felt Washer (used on 46-873)
97-293		Chassis Mtg. Ins. Stud (3 used)
114-128		#10 x 1/16" Hex. Washer Hd. S. T. (3 used Chassis Mtg.)
114-350		#8 x 7/16" Hex. Hd. Sl. S. T. (4 used on 57-1658)
159-50		Cinch Plug Button (4 used on 192-138)
165-9		Glides (2 used)
165-14		Glides (2 used)
188-54		Knob Clamping Ring (46-876)
192-138		Dial Glass
202-697		F. M. Instruction Book
202-840		Radio & Phono Instruction Book
S-14025		Record Changer Assembly
S-15536		Record Changer Compt. Hinge Brkt. & Link Assembly (2 used)
S-15780		Cobra Tone Arm Cartridge Assembly
S-16196		Record Changer Mtg. Frame & Arm Assembly
S-16419		Package of 6 - 45 RPM Center Hole Adaptors
S-16841	L1	Low Impedance Loop & Clip Assembly
S-17167		Volume Control Knob Assembly
S-17169		Cabinet Back Assembly (Radio Section)
S-17328	L19	Loop Loading Coil Assembly

©John F. Rider

Compliments of www.nucow.com

MODEL H723,
Ch. 7H04

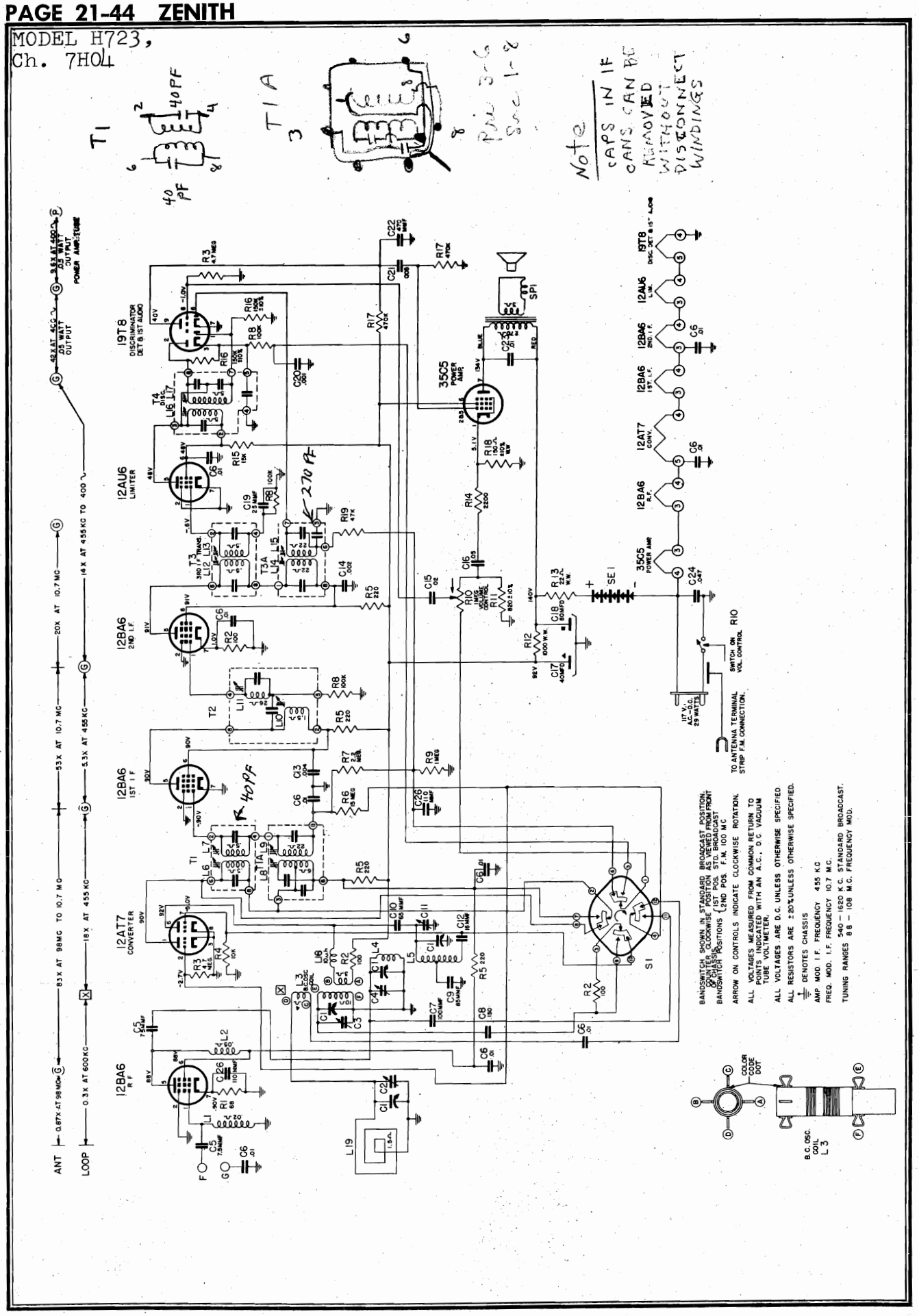

©John F. Rider

Compliments of www.nucow.com

MODEL H723, Ch. 7H04

The 7H04 chassis incorporates a superheterodyne circuit with two stages of IF, on the FM Band, and two stages on the AM Band. There is one stage of RF amplification on the FM Band.

When adjustments are made on the 7H04 or any AC-DC chassis, a line isolation transformer (110-V input to 110-V output) is recommended in order to avoid a "hot" chassis. If an isolation transformer is not available, check the AC voltage between chassis and bench ground, and if there is any indication of voltage, reverse the plug before handling the set.

The IF transformers and the discriminator transformer are the new permeability tuned type. The advantage of an IF transformer of this type is its extreme stability under various humidity and temperature conditions. The upper coil is the secondary and the lower the primary. When adjusting these IF and discriminator transformers, tuning wrench 68-19 can be inserted into the top slug, rotated until maximum output is obtained and then dropped down to the lower slug and the same operation repeated. The tuning wrench is so designed that turning one slug does not affect the adjustment of the other.

FM IF Alignment: Because of the wide band pass, it is desirable to use a FM signal generator and a cathode ray oscilloscope when aligning the FM IF channel. The instruction book for the Zenith Model 800 Signal Generator (Form Z8001) covers complete FM alignment procedure. If visual alignment equipment is unavailable, reasonably accurate alignment can be made by following the procedure outlined in this service note.

FM Discriminator Alignment: When the secondary of the discriminator is aligned (operation 5) use sufficient signal input to get a good positive and negative indication before setting the slug for zero reading. A center zero indicating meter is recommended for this adjustment, but is not absolutely necessary. Reversing the leads of a non-zero center meter, or observing closely when the meter starts to go to the left (negative) of zero will give the same results.

Alignment of this chassis will, in most cases, be unnecessary unless an IF or RF transformer is replaced or the adjustments have been tampered with.

Correct alignment can only be made if the following procedure is followed:

A vacuum tube voltmeter with an isolation resistor of 2,000,000 ohms in series with the hot lead will serve for FM adjustments. This lead should be shielded.

An AC output meter connected across the primary or secondary of the output transformer will be satisfactory for all AM adjustments.

The signal generator output should be kept just high enough to get an indication on the meter.

(a) Vacuum Tube Voltmeter Lug 7 on discriminator transformer to chassis (half discriminator load).

(b) Vacuum Tube Voltmeter Lug 5 on discriminator transformer to chassis (full discriminator load).

(c) Vacuum Tube Voltmeter from Limiter Grid to Chassis.

(d) Loosen Slugs by applying a hot iron to the cement.

	DIAL ASSEMBLY	
46-859	Band Switch Knob	
46-860	Tuning Control Knob	
46-900	Volume Control Knob	
59-251	Dial Pointer	
80-69	Dial Cord Tension Spring	
188-129	Retaining Ring (1 ea. used S-17334 & S-17467)	
S-17334	Tuning Shaft & Pulley Assem.	
S-17336	Tuning Shaft Brkt. & Ins. Strip Assem.	
S-17350	Dial Cord & Eyelet Assem.	
S-17467	Pointer Shaft, Brkt. & Pulley Assem.	
	COILS & CHOKES	
20-329-L1	F.M. Antenna Coil	
20-330-L2	R.F. Plate Load Coil	
20-331-L4	F.M. Mixer Coil	
20-333-L18	R.F. Choke Coil	
95-1102-T3A	3rd I.F. Transformer	455 KC
95-1150-T1T3	1st & 3rd I.F. "	10.7 MC
95-1153-T4	Discriminator "	10.7 MC
95-1250-T1A	1st I.F. "	455 KC
95-1251-T2	2nd I.F. "	10.7 MC & 455KC
S-17340-L3	B.C. Osc. Coil Assem.	
	CONDENSERS	
22-3-C6	.01 Mfd. Ceramic (disc) (9 Used)	500V
22-5-C26	110 Mmfd. Ceramic (disc) (2 Used) (or 22-1669)	500V
22-6-C22	470 Mmfd. Ceramic	500V
22-229-C21	.005 Mfd.	600V
22-448-C13	.004 Mfd.	600V
22-830-C15	.02 Mfd.	600V
22-1126-C23	.01 Mfd.	400V
22-1158-C16	.05 Mfd.	200V
22-1220-C14	.002 Mfd.	600V
22-1507-C19	25 Mmfd. Ceramic	500V
22-1669-C7	100 Mmfd. Ceramic	500V
22-1675-C8	150 Mmfd. Ceramic	500V
22-1676-C20	.001 Mfd. Ceramic	500V
22-1757-C17,C18	Elect. 40 Mfd. 150V - 80 Mfd.	
22-1775-C24	.047 Mfd.	400V
22-1852-C5	7.5 Mmfd. Ceramic (2 Used)	500V
22-2253-C11	Trimmer Cond, (Slug Tuned)	
22-2255-C1	Variable Gane (Two Sect. B.C. - Two Sect. FM)	
22-2256-C10	65 MMfd. Ceramic	500V
22-2257-C12	16 Mmfd. Ceramic	500V
22-2258-C9	85 Mmfd. Ceramic	500V
	RESISTORS	
63-686-R18	150 Ohm W.W. 1/2W 10%Ins.Res.	
63-1450-R13	22 Ohm W.W. 1W 20% Ins. Res.	
63-1527-R12	1000 Ohm W.W. 3W 20% Ins.Res.	
63-1737-R1	68 Ohm 1/2W 20% Ins. Res.	
63-1744-R2	100 Ohm 1/2W 20% Ins. Res.	
63-1758-R5	220 Ohm 1/2W 20% Ins. Res. (3 Used)	
63-1782-R11	820 Ohm 1/2W 10% Ins. Res.	
63-1800-R14	2200 Ohm 1/2W 20% Ins. Res.	
63-1828-R4	10K Ohm 1/2W 20% Ins. Res.	
63-1835-R15	15K Ohm 1/2W 20% Ins. Res.	
63-1856-R19	47K Ohm 1/2W 20% Ins. Res.	
63-1870-R8	100K Ohm 1/2W 20% Ins. Res. (3 Used)	
63-1876-R16	150K Ohm 1/2W 10% Ins. Res. (2 Used)	
63-1898-R17	470K Ohm 1/2W 20% Ins. Res. (2 Used)	
63-1912-R9	1 Megohm 1/2W 20% Ins. Res.	
63-1926-R7	2.2 Megohm 1/2W 20% Ins. Res.	
63-1940-R3	4.7 Megohm 1/2W 20% Ins. Res. (2 Used)	
63-1961-R6	15 Megohm 1/2W 20% Ins. Res.	
63-2143-R10	Vol. Control & Switch	
	MISCELLANEOUS	
11-85	Line Cord & Plug (6 ft. lg.)	
12-1070	Wavemagnet Mtg. Brkt.	
14-1272	Plastic Cabinet for H723 Table Model	
16-656	Packing Carton	
24-535	Line Cord Plug Cover	
49-689-SP1	5-1/4" PM Speaker ZC5091 Cone	
54-129	Speed Nut (9 Used on Mtg. Grille & Baffle)	
54-271	6-32 X 1/4" Palnut Steel (1 ea. used on I.F.)	
57-1686	Emblem Plate	
57-1690	Emblem Mtg. Plate	
58-188	Two Print Plug (AC)	

©John F. Rider

Compliments of www.nucow.com

ALIGNMENT PROCEDURE

Operation	Connect Oscillator to	Dummy Antenna	Input Signal Frequency	Band	Set Dial To	Adj. Trimmers	Purpose
1	Pin 2-12AT7 Converter	.05 Mfd.	455 KC. Modulated	BC	600 Kc.	L8, 9, 11, 14, 15	Align I. F. channel for maximum output.
2	2 turns loosely cpld. to wavemagnet		1600 Kc. Modulated	BC	1600 Kc.	C3	Set oscillator to dial scale.
3	2 turns loosely cpld. to wavemagnet		1400 Kc. Modulated	BC	1400 Kc.	C2	Align antenna stage.
4 (a)	Pin 1 (grid) on 12AU6 limiter.	.05 Mfd.	10.7 Mc. Unmodulated	FM 100		L16 coil slug Primary discr.	Align primary of discriminator for maximum reading.
5 (b)	Pin 1 (grid) on 12AU6 limiter.	.05 Mfd.	10.7 Mc. Unmodulated	FM 100		L17 coil slug sec. of discr.	Adjust secondary of discriminator for zero reading.
6 (c)	Pin 1 (grid) on 12BA6 2nd IF.	.05 Mfd.	10.7 Mc. Unmodulated	FM 100		L12 and 13 Prim. and Sec. of 3rd IF trans.	Align 3rd IF transformer for maximum reading.
7 (c)	Pin 1 (grid) on 12BA6 1st IF.	.05 Mfd.	10.7 Mc. Unmodulated	FM 100		L10 Prim. of 2nd IF transformer.	Align 2nd IF transformer for maximum reading.
8 (c)	Pin 2 (grid) on 12AT7 converter tube socket.	.05 Mfd.	10.7 Mc. Unmodulated	FM 100		L6 and L7 Prim. and Sec. of 1st IF transformer.	Align 1st IF transformer for maximum reading.
9 (c)	Antenna Post FM (Remove line ant.)	270 ohms	98 Mc. Unmodulated	FM 100	98 Mc.	C11 Osc. Coil.	Set Oscillator to dial scale.
10 (c) (d)		270 ohms	98 Mc. Unmodulated	FM 100	98 Mc.	C4 Det. Coil.	Align det. stage to maximum reading.

TUBE AND TRIMMER LOCATION

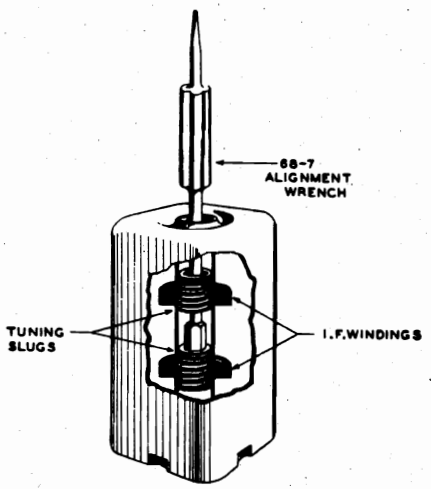

Detail of IF Transformer

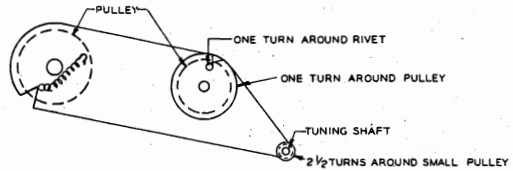

DIAL CORD DRIVE

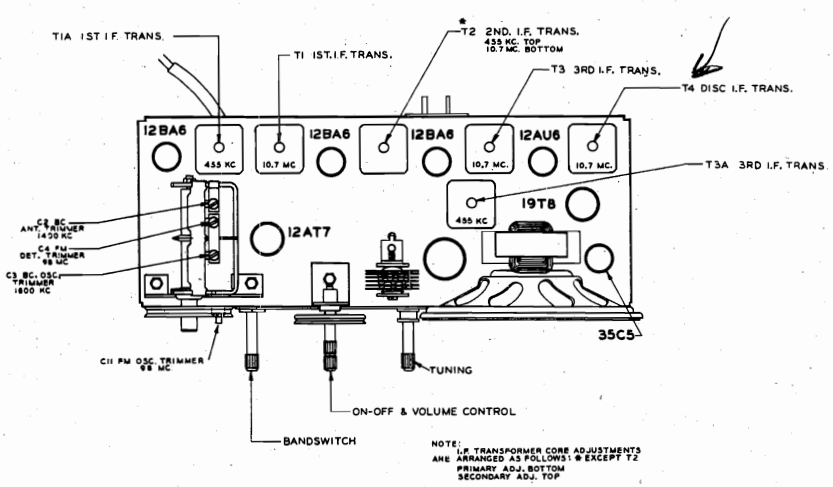

PRI-BOT
SEC TOP

78-787	Two Contact Socket (Cabinet Back)
78-806	Miniature Tube Socket
78-807	Miniature Tube Socket
78-869	Miniature Tube Socket
78-870	Miniature Tube Socket (2 Used)
78-871	Miniature Tube Socket
78-903	Miniature Tube Socket
83-1056	Wavemagnet Mtg. Strip
83-1829	Insulator Strip
85-493-S1	Band Switch
97-293	Chassis Mtg. Stud (2 Used)
110-152	Grille Cloth
112-281	#10 X 3/4" Oval Bind. Hd. S.T. Br. (2 Used Chassis Mtg.)
114-78	#8 X 5/16 Hex. Hd. Sl. S.T. (Used on Mtg. Wavemagnet)
114-356	#6-32 X 1-1/4" Hex. Hd. S.T. Cad. (Used on 212-7)
138-42	Cabinet Grill
139-91	Speaker Baffle
149-89	Iron Core (Used on S-17340)
159-69	Plug Button (4 Used to mt. back)
194-22	Insulator
196-153	Speaker Gasket
202-697	F.M. Instruction Book
202-841	Instruction Book
212-7-SE1	Selenium Rectifier
S-14527	Wavemagnet Lead & Stop Assem.
S-17364-L19	Wavemagnet Assem.
S-17366	Cabinet Back Assem. (Complete)

©John F. Rider

Compliments of www.nucow.com

MODELS H1083E, H1086R, H1087R, Ch. 10H20

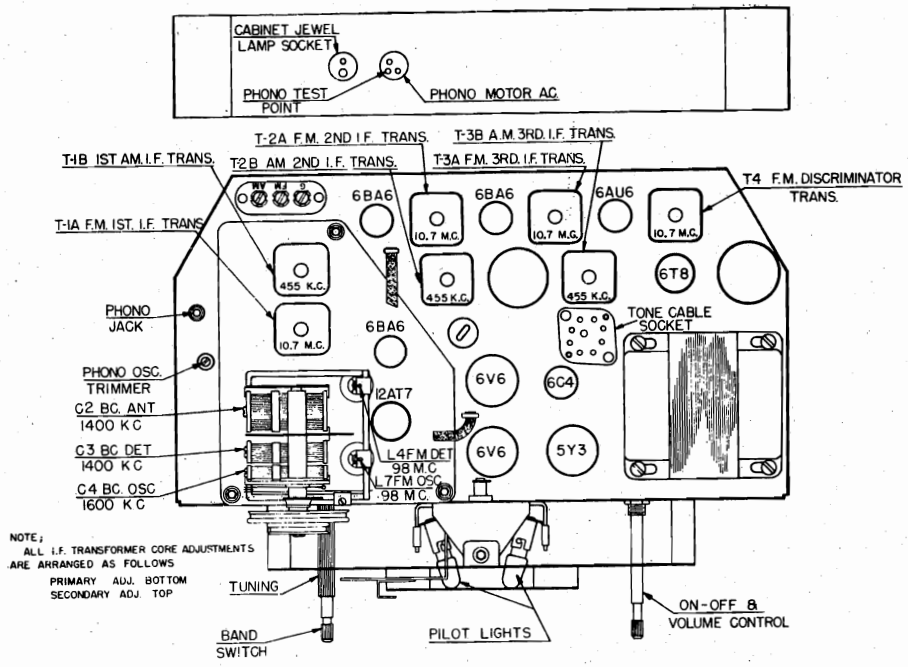

TUBE AND TRIMMER LOCATION

The 10H20 chassis incorporates a superheterodyne circuit with two stages of IF, on the FM Band, and two stages on the AM Band. There is one stage of RF amplification on all Bands.

FM RF Alignment: The tuning slugs are attached to threaded shafts and the slugs are varied in the field of the coils by turning the shafts clockwise or counter-clockwise. After adjustment the shafts must be secured with a drop of speaker cement.

AM and FM Alignment: The AM and FM IF transformers in this receiver are of the new permeability tuned type. The advantage of an IF transformer of this type is its extreme stability under various humidity and temperature conditions. The upper coil is the secondary and the lower the primary. When adjusting these IF transformers the tuning wrench 68-19 can be inserted into the top slug, rotated until maximum output is obtained and then dropped down to the lower slug and the same operation repeated. The tuning wrench is so designed that turning one slug does not affect the adjustment of the other.

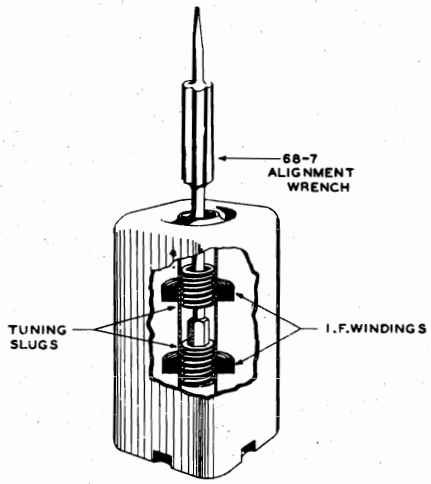

Detail of IF Transformer

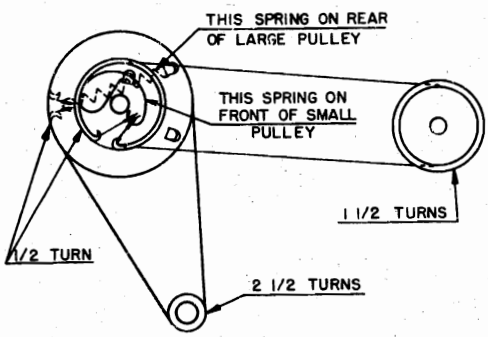

DIAL CORD DRIVE

FM IF Alignment: Because of the wide band pass, it is desirable to use a FM signal generator and a cathode ray oscilloscope when aligning the FM IF channel. The instruction book for the Zenith Model 800 Signal Generator (Form Z8001) covers complete FM alignment procedure. If visual alignment equipment is unavailable, reasonably accurate alignment can be made by following the procedure outlined below.

FM Discriminator Alignment: When the secondary of the discriminator is aligned (operation 5) use sufficient signal input to get a good positive and negative indication before setting the slug for zero reading. A center zero indicating meter is recommended for this adjustment, but is not absolutely necessary. Reversing the leads of a non-zero center meter, or observing closely when the meter starts to go to the left (negative) of zero will give the same results.

©John F. Rider

Compliments of www.nucow.com

MODELS H1083E, H1086R,
H1087R, Ch. 10H20

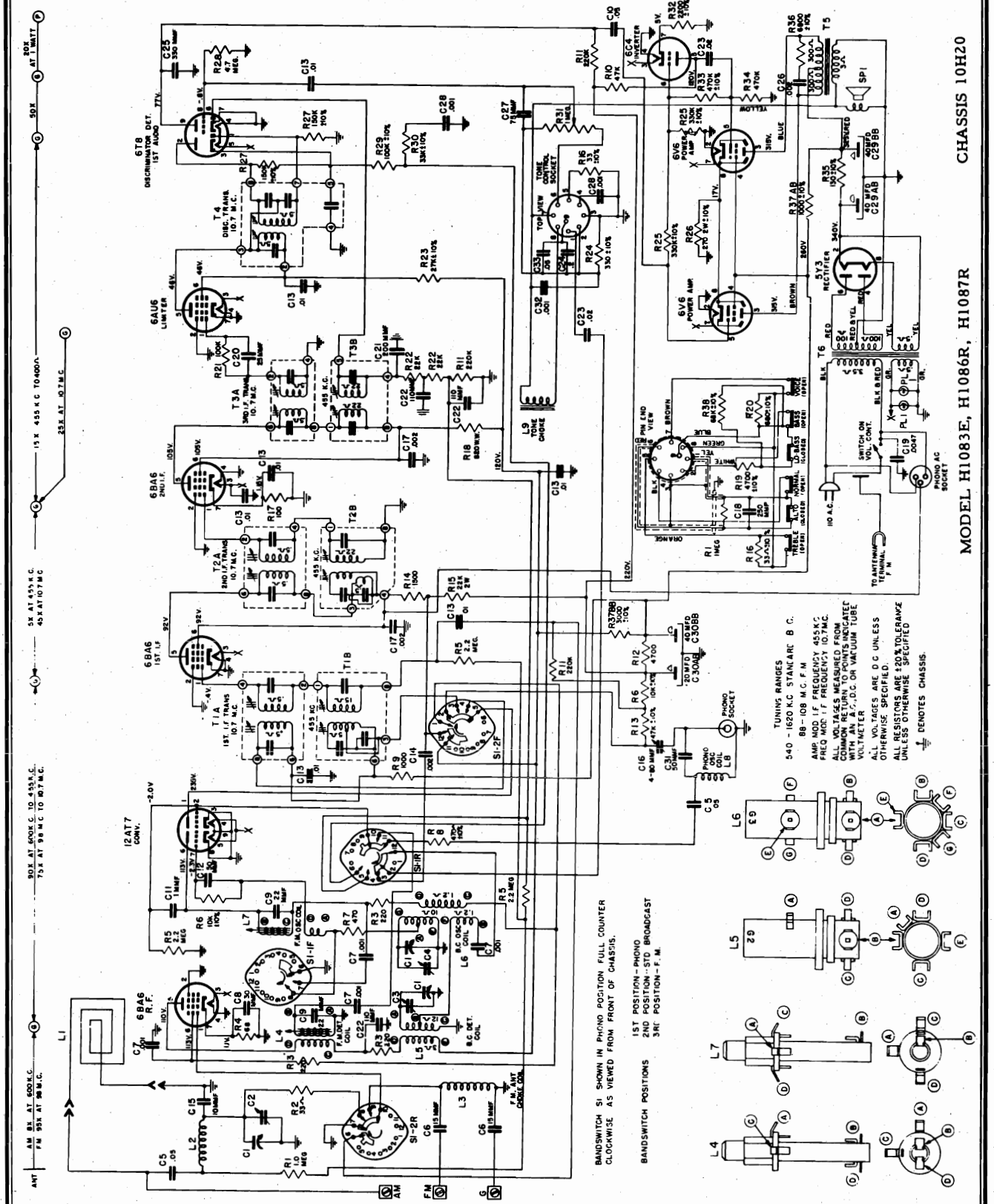

©John F. Rider

Compliments of www.nucow.com

ALIGNMENT PROCEDURE

Operation	Connect Oscillator To	Dummy Antenna	Input Signal Frequency	Band	Set Dial To	Adj. Trimmers	Purpose
1	Pin 2 12AT7 Converter	.05 Mfd.	455 Kc. Modulated	BC	600 Kc.	Adj. Pri. and Sec. T1B, T2B, T3B	Align I. F. channel for maximum output.
2	2 turns loosely cpld. to wavemagnet		1600 Kc. Modulated	BC	1600 Kc.	C4	Set oscillator to dial scale.
3	2 turns loosely cpld. to wavemagnet		1400 Kc. Modulated	BC	1400 Kc.	C3, C2	Align detector and antenna stage.
4 (a)	Pin 1 (grid) on 6 AU6 limiter.	.05 Mfd.	10.7 Mc. Unmodulated	FM 100		Adj. Primary of Discriminator T4	Align primary of discriminator for maximum reading.
5 (b)	Pin 1 (grid) on 6 AU6 limiter.	.05 Mfd.	10.7 Mc. Unmodulated	FM 100		Adj. Secondary of Discriminator T4	Adjust secondary of discriminator for zero reading.
6 (c)	Pin 1 (grid) on 6 BA6 2nd. I F.	.05 Mfd.	10.7 Mc. Unmodulated	FM 100		Adj. Pri. and Sec. T3A	Align 3rd. IF transformer for maximum reading.
7 (c)	Pin 1 (grid) on 6 BA6 1st. IF.	.05 Mfd.	10.7 Mc. Unmodulated	FM 100		Adj. Pri. and Sec. T2A	Align 2nd IF transformer for maximum reading.
8 (c)	Pin 2 (grid) on 12AT7 converter tube socket.	.05 Mfd.	10.7 Mc. Unmodulated	FM 100		Adj. Pri. and Sec. T1A	Align 1st. IF transformer for maximum reading.
9 (c)	Antenna Post FM (Remove line ant.)	270 ohms	98 Mc. Unmodulated	FM 100	98 Mc.	L7 Osc. Coil Slug.	Set Oscillator to dial scale.
10 (c) (d)		270 ohms	98 Mc. Unmodulated	FM 100	98 Mc.	L4 Det. Coil Slug	Align det. stage to maximum reading.

IMPORTANT

Alignment of this chassis will in most cases be unnecessary unless an IF or RF transformer is replaced or the adjustments have been tampered with.

Correct alignment can only be made if the following procedure is followed:

A vacuum tube voltmeter with an isolation resistor of 2,000,000 ohms in series with the hot lead will serve for FM adjustments. This lead should be shielded.

An AC output meter connected across the primary or secondary of the output transformer will be satisfactory for all AM adjustments.

The signal generator output should be kept just high enough to get an indication on the meter.

In the event the receiver oscillates during phono operation, adjust C16 4-80 mmf. capacitor to a point at which the oscillation ceases.

This position of no oscillation will sometimes vary with different cartridges, and in this case readjustment of C16 must be made.

(a) Vacuum Tube Voltmeter Lug 7 on discriminator transformer to chassis (Half discriminator load).

(b) Vacuum Tube Voltmeter Lug 5 on discriminator transformer to chassis (Full discriminator load).

(c) Vacuum Tube Voltmeter from Limiter Grid to Chassis.

(d) Loosen Slugs by applying a hot iron to the cement.

PARTS LIST

Model H1087R - H1086R (Chassis 10H20)

Dial Assembly

78-898	Dial Light Socket & Wire
80-69	Dial Cord Spring
80-746	Pulley Retaining Spring (used on S-17157)
80-747	Dial Cord Spring
93-1061	Shoulder Washer (used on S-17258)
100-67	Dial Light Bulb
188-30	Retaining Ring (used on S-17155)
S-17155	Tuning Shaft & Pulley Assembly
S-17157	Pointer & Pulley Assembly (59-219)
S-17158	Dial Cord & Eyelet Assembly (Long)
S-17159	Dial Cord & Eyelet Assembly (Short)
S-17258	Dial Scale & Brkt. Assem. (26-449 & 26-450)
S-17261	Brkt. & Pulley Assembly

Coils & Chokes

95-1150	2nd. & 3rd. I. F. Trans. (FM) (2 used)
95-1153	Discriminator Trans.
95-1201	1st. I. F. Trans. (FM)
95-1248	1st. I. F. Trans. (BC)
95-1249	2nd. I. F. Trans. (BC)
95-1254	3rd. I. F. Trans. (BC)
S-12603	Phono Oscillator Coil
S-13800	Tone Choke Assembly
S-15691	F. M. Osc. Coil Assembly
S-15743	F. M. Detector Coil Assembly
S-16344	Broadcast Detector Coil Assembly
S-16345	Broadcast Oscillator Coil Assembly
S-16408	Antenna Choke Coil Assembly

Condensers

22-3	C13	.01	Mfd.	Ceramic	(7 used)	500V
22-5	C22	110	Mmfd.	Ceramic (or 22-1669)	(3 used)	500V
22-171	C10	.05	Mfd.			600V
22-178	C33	.05	Mfd.			200V
22-348	C32	.001	Mfd.	(Molded)		500V
22-492	C14	.002	Mfd.			600V
22-829	C5	.05	Mfd.	(2 used)		200V
22-830	C23	.02	Mfd.	(2 used)		600V
22-1203	C28	.001	Mfd.	(2 used)		600V
22-1220	C17	.002	Mfd.	(2 used)		600V
22-1256	C27	75	Mmfd.	(Molded)		500V
22-1367	C12	50	Mmfd.	Ceramic		500V
22-1506	C9	22	Mmfd.	Ceramic	(2 used)	500V
22-1531	C24	.2	Mfd.			200V
22-1612	C29AB-C29BB		Elect. 40 Mfd.-40 Mfd.			450V
22-1645	C25	330	Mmfd.	(Molded)		500V
22-1668	C21	200	Mmfd.	Ceramic		500V
22-1676	C7	.001	Mfd.	Ceramic	(4 used)	500V
22-1705	C8	30	Mmfd.	Ceramic		500V
22-1761	C31	50	Mmfd.	Ceramic		500V
22-1762	C11	1	Mmfd.	Ceramic		500V
22-1782	C19	.0047	Mfd.	(Molded)		600V
22-1802	C26	.002	Mfd.			1600V
22-1887	C20	25	Mmfd.	Ceramic		500V
22-2104	C1	Three Section Gang				
22-2140	C6	15	Mmfd.	Ceramic		500V
22-2243	C30AB-C30BB		Elect. 20 Mfd.-40 Mfd.			450V
22-2251	C16	Trimmer Cond.				

©John F. Rider

Compliments of www.nucow.com

Resistors

63-966	R12	4700	ohm	2W	20%	Ins.	Res.
63-1452	R26	270	ohm	WW	2W	10%	Ins. Res.
63-1722	R16	33	ohm	1/2W	10%	Ins.	Res.
63-1723	R2	33	ohm	1/2W	20%	Ins.	Res.
63-1737	R4	68	ohm	1/2W	20%	Ins.	Res.
63-1744	R17	100	ohm	1/2W	20%	Ins.	Res.
63-1758	R3	220	ohm	1/2W	20%	Ins.	Res. (3 used)
63-1764	R24	330	ohm	1/2W	10%	Ins.	Res.
63-1771	R8	470	ohm	1/2W	10%	Ins.	Res.
63-1772	R7	470	ohm	1/2W	20%	Ins.	Res.
63-1786	R9	1000	ohm	1/2W	20%	Ins.	Res.
63-1793	R14	1500	ohm	1/2W	20%	Ins.	Res.
63-1799	R32	2200	ohm	1/2W	10%	Ins.	Res.
63-1820	R36	6800	ohm	1/2W	10%	Ins.	Res.
63-1827	R6	10K	ohm	1/2W	10%	Ins.	Res. (2 used)
63-1842	R22	22K	ohm	1/2W	20%	Ins.	Res. (2 used)
63-1845	R23	27K	ohm	1/2W	10%	Ins.	Res.
63-1848	R30	33K	ohm	1/2W	10%	Ins.	Res.
63-1855	R13	47K	ohm	1/2W	10%	Ins.	Res.
63-1856	R10	47K	ohm	1/2W	20%	Ins.	Res.
63-1869	R29	100K	ohm	1/2W	10%	Ins.	Res.
63-1870	R21	100K	ohm	1/2W	20%	Ins.	Res.
63-1876	R27	150K	ohm	1/2W	10%	Ins.	Res. (2 used)
63-1884	R11	220K	ohm	1/2W	20%	Ins.	Res. (3 used)
63-1890	R25	330K	ohm	1/2W	10%	Ins.	Res. (2 used)
63-1897	R33	470K	ohm	1/2W	10%	Ins.	Res.
63-1898	R34	470K	ohm	1/2W	20%	Ins.	Res.
63-1912	R1	1	Megohm	1/2W	20%	Ins.	Res.
63-1926	R5	2.2	"	1/2W	20%	Ins.	Res. (3 used)
63-1940	R28	4.7	"	1/2W	20%	Ins.	Res.
63-2091	R18	820	ohm	WW 1/2W	20%	Ins.	Res.
63-2138	R37AB-R37BB		Candohm				
63-2139	R31	Volume Control & Switch					
63-2141	R15	22K	ohm	2W	20%	Ins.	Res.
63-2142	R35	130	ohm	Zipohm 5W	10%	Ins.	Res.

Miscellaneous

11-106		Line Cord & Plug 9 ft. long
19-212		Transformer Mtg. Clip (95-1252)
54-313		Speed Nut (used on S-13800)
78-580		Nine Contact Socket
78-644		Phono Connector Socket
78-755		Octal Tube Socket (3 used)
78-807		Miniature Tube Socket (2 used)
78-854		Miniature Tube Socket (9 contact)
78-869		Miniature Tube Socket
78-870		Miniature Tube Socket (2 used)
78-871		Miniature Tube Socket
78-896		Three Contact Socket
78-897		Two Contact Socket
80-780		Iron Core Tension Spring (3 used)
80-781		Tuner Arm Tension Spring
85-490		Band Switch
93-965		Rubber Washer (used on S-13800)
93-1039		Gang Mtg. Cup Washer (2 used)
95-1252	T5	Speaker Output Trans.
95-1253	T6	Power Transformer
113-43		#6 x 5/16 Hex Hd. Sl. S.T. (used on S-17258)
114-39		#8 x 1/4 Hex Hd. S.T. (2 used on S-17258)
148-122		Tuner Arm
149-95		Iron Core & Spring (2 used)
S-17257		Speaker Cable & Eyelet Assembly

Radiorgan Esc. Parts Used on H1087R-H1086R

76-444	Radiorgan Knob Shaft (2 used)
114-297	#6 x 1/4 Hex Hd. Sl. S.T. (2 used on S-17252 & S-17253)
S-14255	Radiorgan Mtg. Brkt. Assembly (2 used)
S-17246	Radiorgan Knob & Eyelet Assembly (Treble)
S-17247	Radiorgan Knob & Eyelet Assembly (Voice)
S-17248	Radiorgan Knob & Eyelet Assembly (Alto)
S-17249	Radiorgan Knob & Eyelet Assembly (Bass)
S-17250	Radiorgan Knob & Eyelet Assembly (Lo-Bass)
S-17251	Radiorgan Knob & Eyelet Assembly (Normal)
S-17252	Radiorgan Esc. & Knob Assembly (R.H.)
S 17253	Radiorgan Esc. & Knob Assembly (L.H.)

S-17255 Radiorgan Cable Assembly

15-79		Plug Cap & Insulator
22-1745		250 Mmfd. Ceramic 500V
58-195		9 Prong Plug
63-1722	R16	33 ohm 1/2W 10% Ins. Res.
63-1778	R20	680 ohm 1/2W 10% Ins. Res.
63-1813	R19	4700 ohm 1/2W 10% Ins. Res.
63-1862	R38	68K ohm 1/2W 10% Ins. Res.
63-1912	R1	1 Megohm 1/2W 20% Ins. Res.
S-14261		Radiogran Strip & Contact Assembly (2 used)
S-17255		Radiogran Cabel Assembly

Cabinet Parts H1087R

2-214		Cabinet Back (Phono Section)
14-1279R		Cabinet for H1087R Console Combination Model
16-662		Packing Carton
19-9		Cable Clip
19-169		Record Changer Mtg. Clip (2 used)
19-210		Loop Connector Clip (2 used)
46-872		Volume Control Knob
46-876		Tuning Control Knob
46-877		Dummy Knob
46-899		Band Switch Knob
49-693	SP-1	12" PM Speaker ZC12161 Cone & Voice Coil
57-1284		Strike Plate (3 used)
57-1481		Escutcheon Clamping Plate (4 used)
57-1666		Radio Dial Escutcheon
70-3		#5 x 1/2 R.H.W.S. Steel N.P. (1 used 19-9 & 2 used 83-1220)
70-86		#6 x 5/8 Washer Hd. Wood Screw St. Br. (8 used to Mt. 2-214)
74-71		Ventilating Screen
78-891		Pilot Light Socket & Wire
80-604		Hinge Spring (2 used)
80-830		Record Changer Mtg. Spring (4 used)
83-1220		Pilot Light Socket Mtg. Strip
90-367		Pilot Light Tube
93-168		Rubber Shoulder Washer (4 used)
100-36	PL1	Pilot Light Bulb
112-808		#6 x 5/16 Phillips Rd. Hd. S.T. (4 used on Esc. Mtg.)
112-809		Record Changer Mtg. Screw (3 used)
114-350		#8 x 7/16 Hex Hd. Sl. S.T. (4 used on Esc. Mtg.)
114-354		Chassis Mtg. Screw (4 used)
156-35		Bullet Catch (3 used)
159-50		Plug Button Black Oxide (2 used)
165-9		Metal Glide (2 used)
165-14		Metal Glide (2 used)
166-55		Tack Bumper (3 used)
171-7		Pilot Light Lens
188-54		Knob Clamping Ring (46-876)
192-138		Dial Glass
202-697		F. M. Instruction Book
202-834		Radio-Phono Instruction Book
S-14029		Variable Speed Record Changer
S-15528	L1	Low Impedance Loop Assembly
S-15536		Record Changer Compt. Hinge Brkt. & Link Assembly (2 used)
S-15780		Cobra Tone Arm Cartridge
S-16419		Record Adapter Plug & Envelope Assembly
S-17005		Record Changer Mtg. Fram Assembly
S-17167		Volume Control Knob Assembly
S-17255		Radiogran Cable Assembly
S-17328	L2	Loop Loading Coil Assembly

Cabinet Parts H1086R

Model H1086R is the same as H1087R except the following:

2-192	Cabinet Back (Phono Section)
14-1251R	Cabinet for H1086R Console Combination Model
16-641	Packing Carton

Cabinet Parts H1083E

2-215	Cabinet Back (Phono Section)
14-1280E	Cabinet for H1083E Console Combination
16-666	Packing Carton
19-9	Cable Clip
19-169	Record Changer Mtg. Clip (2 used)
19-210	Loop Connector Clip (2 used)
46-876	Tuning Control Knob
46-899	Band Switch Knob
49-693	12" P.M. Speaker ZC12161 Cone & Voice Coil
57-1270	Strike Plate (2 used)
57-1481	Esc. Clamping Plate (4 used)
57-1666	Radio Dial Esc.
70-3	#5 x 1/2 R.H.W.S. Steel N.P. (1 used on 19-9 & 2 used 83-1220)
70-86	#6 x 5/8 Washer Hd. Wood Screw St. Br. (8 used to mt. 2-215)
74-71	Ventilating Screen
78-891	Pilot Light Socket & Wire
80-604	Hinge Spring (2 used)
80-830	Record Changer Mtg. Spring (4 used)
83-1220	Pilot Light Socket Mtg. Strip
90-367	Pilot Light Tube
93-168	Rubber Shoulder Washer (4 used on Chassis)
100-36	Pilot Light Bulb
112-808	#6 x 5/16 Phill. Rd. Hd. S.T. (4 used esc. mtg.)
112-809	Record Changer Mtg. Screw (3 used)
114-350	#8 x 7/16 Hex Hd. Sl. S.T. (4 used esc. mtg.)
114-354	Chassis Mtg. Screw (4 used)
156-33	Bullet Catch (2 used)
159-50	Plug Button (2 used)
165-9	Metal Glide (2 used)
165-14	Metal Glide (2 used)
171-7	Pilot Light Lens
188-54	Knob Clamping Ring (46-876)
192-138	Dial Glass
202-697	F.M. Instruction Book
202-834	Radio-Phono Instruction Book
S-14029	Variable Speed Record Changer
S-15528	Low Impedance Loop Assembly
S-15536	Record Changer Compt. Hinge Brkt. & Link Assembly (2 used)
S-15780	Cobra Tone Arm Cartridge
S-16419	Record Adapter Plug & Envelope Assembly
S-17005	Record Changer Mtg. Frame Assembly
S-17167	Volume Control Knob Assembly
S-17255	Radiorgan Cable Assembly (Complete)
S-17328	Loop Loading Coil Assembly

Radiorgan Esc. Parts Used on H1083E

76-444	Radiorgan Knob Shaft (2 used)
114-297	#6 x 1/4 Hex Hd. Sl. S. T. (2 used on S-17252 & S-17253)
S-14255	Radiorgan Mtg. Brkt. Assembly (2 used)
S-17246	Radiorgan Knob & Eyelet Assembly (Treble)
S-17247	Radiorgan Knob & Eyelet Assembly (Voice)
S-17248	Radiorgan Knob & Eyelet Assembly (Alto)
S-17249	Radiorgan Knob & Eyelet Assembly (Bass)
S-17250	Radiorgan Knob & Eyelet Assembly (Lo-Bass)
S-17251	Radiorgan Knob & Eyelet Assembly (Normal)
S-17252	Radiorgan Esc. & Knob Assembly (R.H.)
S 17253	Radiorgan Esc. & Knob Assembly (L.H.)

©John F. Rider

Compliments of www.nucow.com

MODEL 7400,
Radio Hat

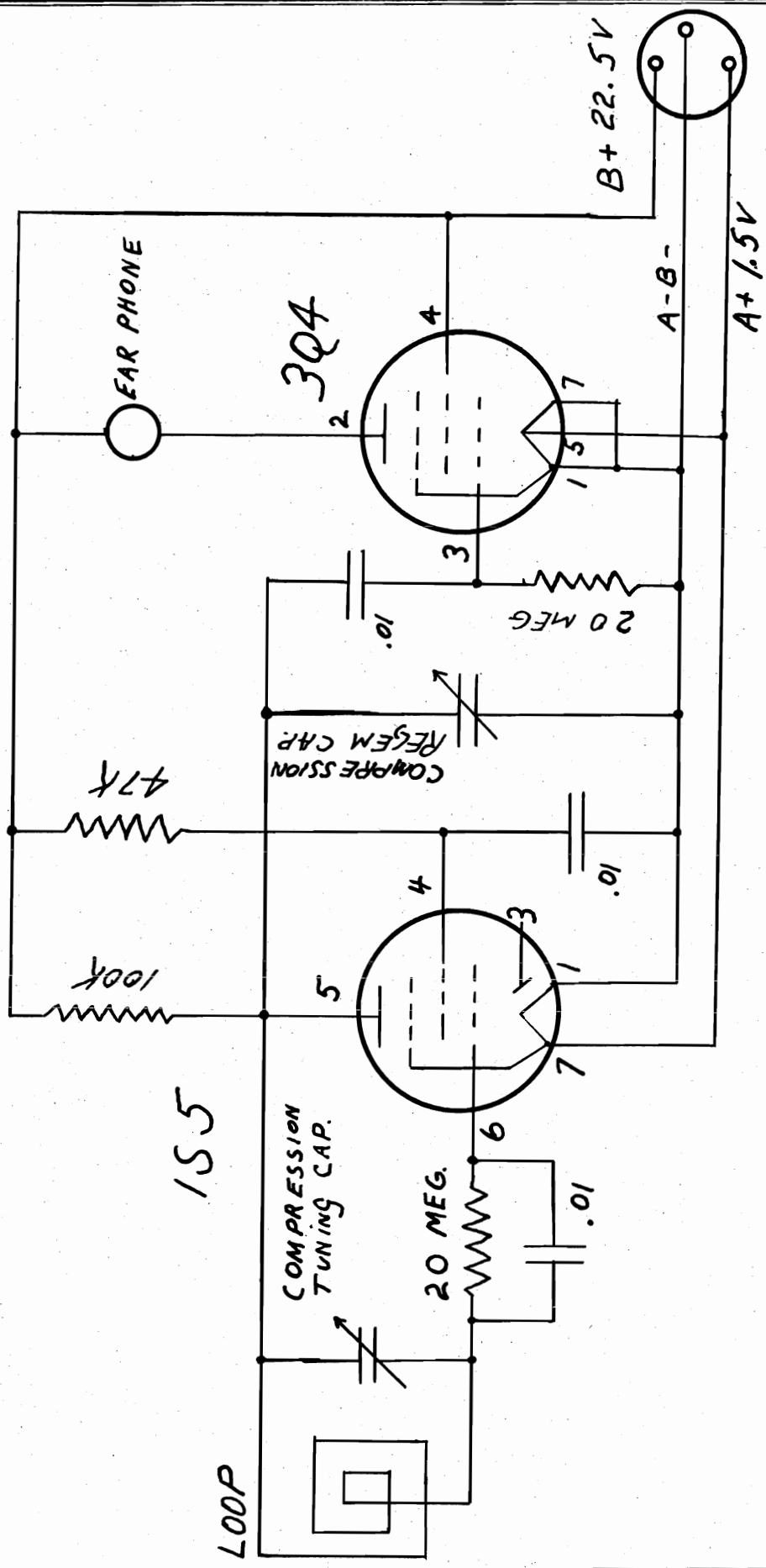

©John F. Rider

Compliments of www.nucow.com

The Maguire Model 6L is a superheterodyne radio receiver having 5 tubes plus a rectifier tube, with provision for phonograph input, for operation on 105-125 volt AC or DC power supply. The tubes used are a 12SK7 as an R.F. amplifier, a 12SA7 as an oscillator-converter, a 12SK7 as an I.F. amplifier, a 12SQ7 as an AVC, detector, and 1st audio amplifier, a 35L6 as an output, and a 35Z5 as a power rectifier.

The broadcast band covers a frequency range from 535 to 1620 kilocycles. The dial is calibrated in kilocycles (KC) (less the final zero).

CONTROLS

TONE CONTROL: (Center knob).

Turn knob counter-clockwise for maximum bass and clockwise for maximum treble response.

VOLUME CONTROL: (Left-hand knob).

Turning knob clockwise turns the receiver on and turning further increases the volume.

TUNING CONTROL: (Right-hand knob).

This knob is used to select stations. Tune station until it is at maximum clearness. Never attempt to reduce the volume by detuning the station—always use the volume control.

OPERATION

Turn the "On-Off" switch and volume control clockwise about half its range. This supplies power to the receiver. After allowing the tubes to warm up, tune in the desired station by rotating the tuning control. For best results, tune the desired station with the volume turned low. This enables you to get the exact point where the station comes in best. Then adjust the volume control.

To operate the receiver as a phonograph amplifier, connect phonograph lead to phonograph terminals at rear of loop, according to instructions printed at phonograph terminals. Turn "On-Off" switch and volume control clockwise about half its range and adjust tone control to desired position. Turn tuning control clockwise to the extreme right hand end of its range to silence radio.

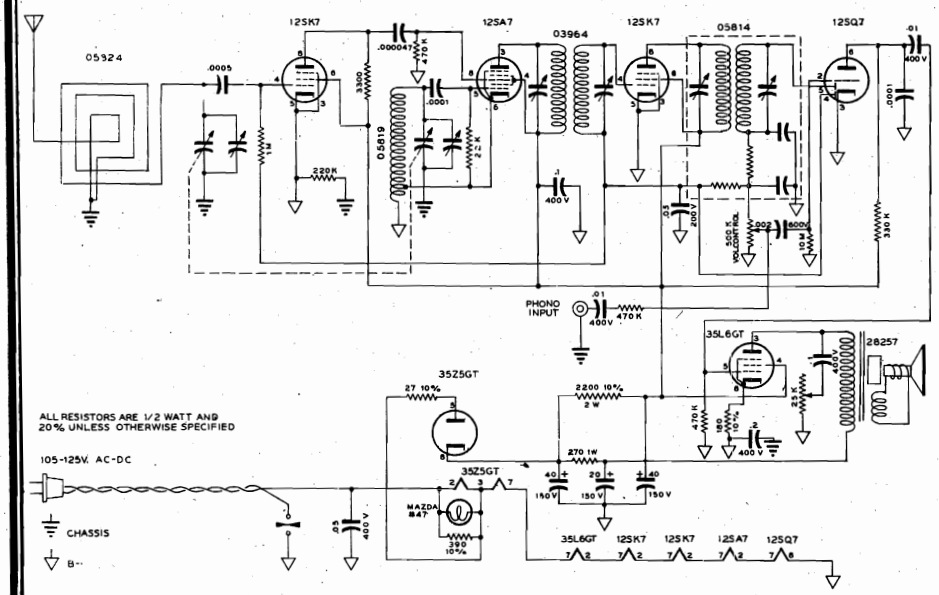

TUBE LAYOUT

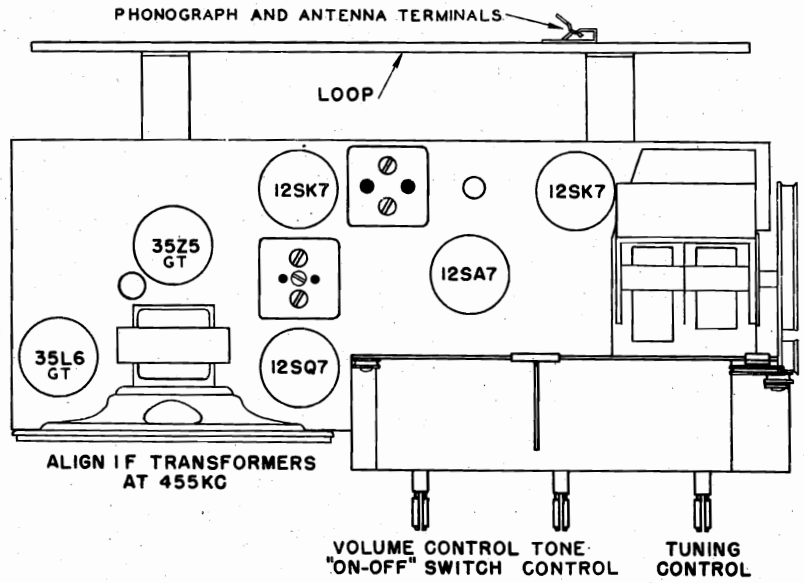

INSTALLATION

When using D.C. power supply, and after allowing sufficient time for tubes to warm up, if the receiver does not operate, remove the line cord plug from the socket and reverse. Replace the plug in the reverse position and allow tubes to warm up, at which time the receiver will operate.

When using A.C. power supply, it will be found that there will be less hum when the line cord is in the best position. Try both positions, leaving the plug in the position that produces the least hum.

For reception of local stations no antenna is necessary, the built-in loop providing sufficient volume. If it is desired to listen to more distant stations, an antenna 50 to 100 feet long should be connected to the antenna terminal at the rear of the loop. **Do not use a ground with this receiver.**

If the receiver fails to operate, see that all tubes are pushed down in their respective sockets as illustrated in the tube layout diagram below. **Always disconnect line cord plug before making any adjustments inside cabinet.** It is necessary to remove the receiver from the cabinet to replace tubes.

Sometimes, when operating this receiver in buildings having steel in their construction, it will be necessary to use an external antenna to provide sufficient volume for satisfactory operation.

Phonograph terminals are provided at the rear of the cabinet. Shielded cable should be used to connect a crystal type phonograph pickup to the radio. When the tuning control is turned clockwise to the end of its range the radio section of the receiver is silenced, permitting use of the receiver amplifier with phonograph input.

©John F. Rider

Compliments of www.nucow.com

MODEL 9015

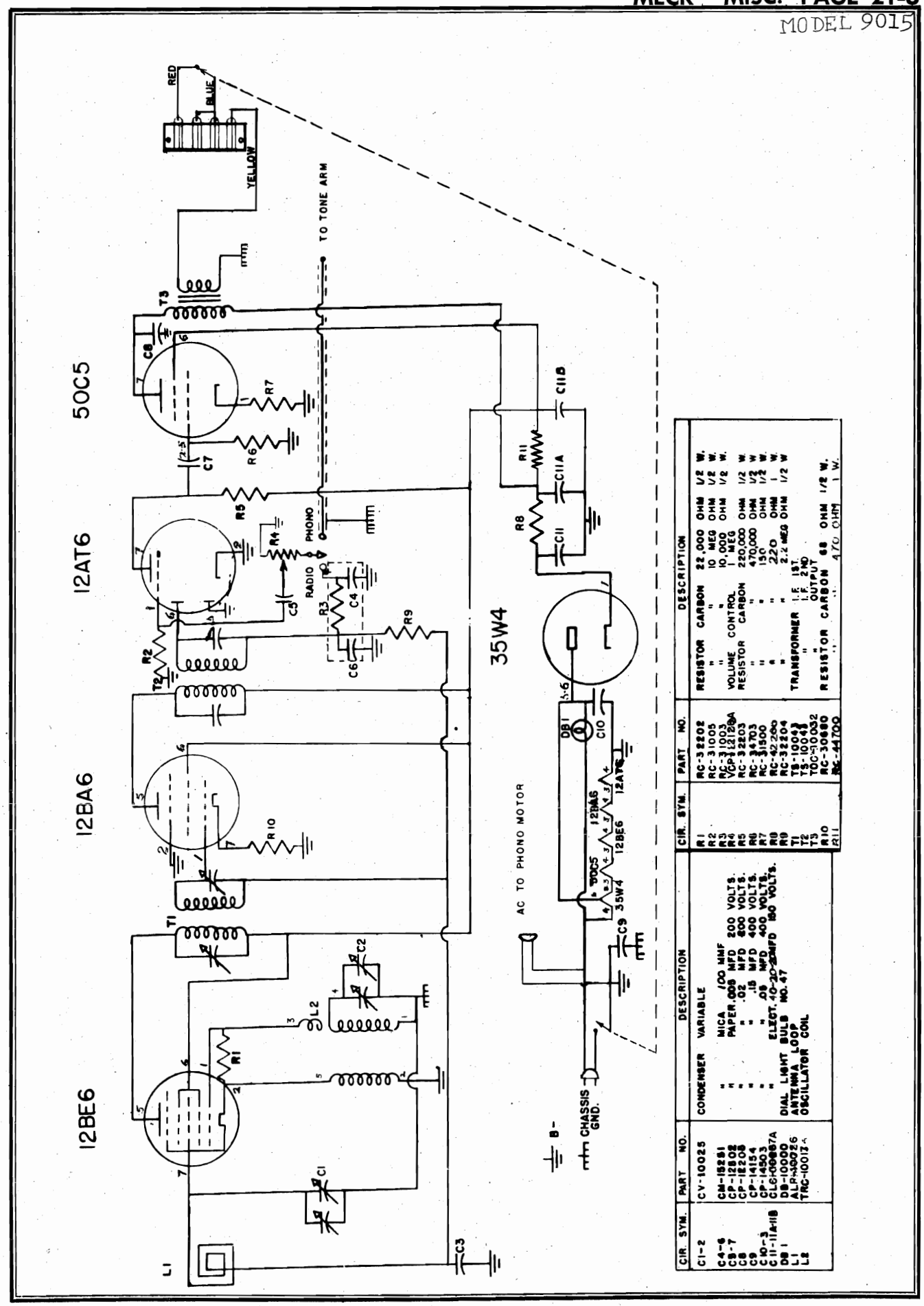

CIR. SYM.	PART NO.	DESCRIPTION	CIR. SYM.	PART NO.	DESCRIPTION
C1-2	CV-10025	CONDENSER VARIABLE	R1	RC-32202	RESISTOR CARBON 22,000 OHM 1/2 W.
C4-6	CM-15281	" MICA 100 MMF	R2	RC-31005	" " 10 MEG OHM 1/2 W.
C5-7	CP-12802	" PAPER .005 MFD 200 VOLTS.	R3	RC-31003	" " 10,000 OHM 1/2 W.
C8	CP-12203	" " .02 MFD 600 VOLTS.	R4	VCP-12120A	VOLUME CONTROL 1 MEG
C9	CP-14154	" " .15 MFD 400 VOLTS.	R5	RC-32203	RESISTOR CARBON 220,000 OHM 1/2 W
C10-3	CP-14503	" " .05 MFD 400 VOLTS.	R6	RC-34703	" " 470,000 OHM 1/2 W
C11-11A-11B	CL6-00067A	" ELECT. 40-20-20 MFD 150 VOLTS.	R7	RC-31500	" " 150 OHM 1/2 W.
DB1	DB-10000	DIAL LIGHT BULB NO. 47	R8	RC-42200	" " 220 OHM 1 W.
L1	ALR-50026	ANTENNA LOOP	R9	RC-32204	" " 2.2 MEG OHM 1/2 W
L2	TRC-10013A	OSCILLATOR COIL	T1	TS-10041	TRANSFORMER I.F. 1ST
			T2	TS-10042	" I.F. 2ND
			T3	TOC-100032	" OUTPUT
			R10	RC-30680	RESISTOR CARBON 68 OHM 1/2 W.
			R11	RC-44700	" " 470 OHM 1 W.

©John F. Rider

Compliments of www.nucow.com

MODELS 153, 196,
197U, Ch. AR

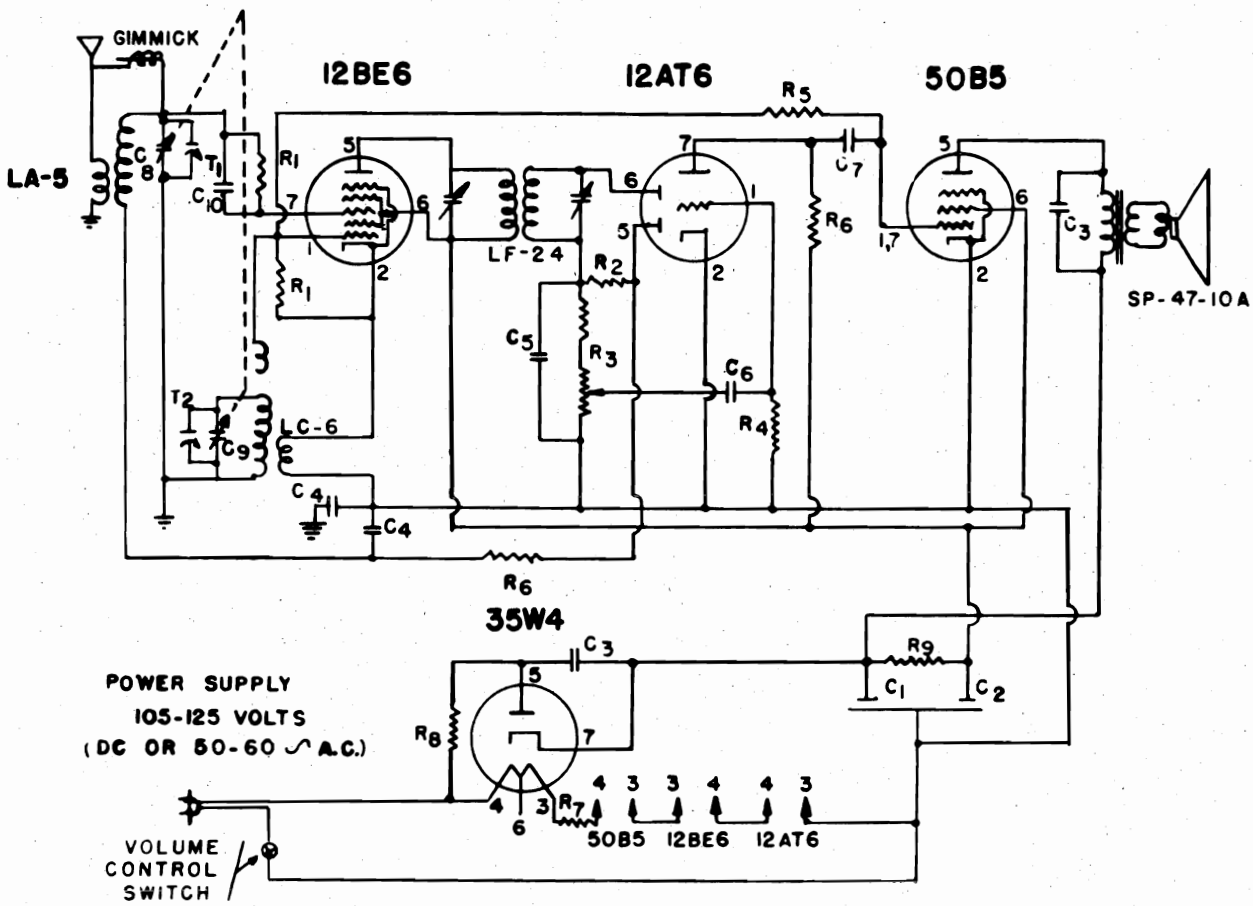

ITEM	DESCRIPTIONS	PART NO.
C_1, C_2	2 X 40 MFD. 150 VOLT ELECT.	CE-15
C_3	.02 MFD. 400 V. PAPER COND.	CP-203-1
C_4	.05 MFD. 400 V. PAPER COND.	CP-503-1
C_5	100 MMFD. 500 V. MICA COND.	CM-101-1
C_6	.002 MFD. 400 V. PAPER COND.	CP-202-2
C_7	.005 MFD. 200 V. PAPER COND.	CP-502-3
C_8, C_9	VARIABLE CONDENSER	CV-14
C_{10}	500 MMFD. 500 V. MICA COND.	CM-501-1
LC-6	OSCILLATOR COIL	LC-6
LA-5	ANTENNA COIL	LA-5
LF-24	I.F. TRANSFORMER	LF-24
R_1	18,000 OHMS 1/2 W. 10%	RC-183-2
R_2	4.7 MEGOHMS 1/2 W. RESISTOR	RC-475-1
R_3	2 MEG. VOL. CONTROL, 100K STOP	VC-11
R_4	10 MEGOHMS 1/2 W. RESISTOR	RC-106-1
R_5	330,000 OHMS 1/2 WATT	RC-334-1
R_6	220,000 OHMS 1/2 WATT	RC-224-1
R_7	39 OHMS 1 WATT RESISTOR	RW-390-5
R_8	18 OHMS 1/2 W. RESISTOR	RC-180-2
R_9	2200 OHMS 1 W. RESISTOR	RC-222-5
T_1, T_2	TRIMMERS	
SP-47-10A	SPEAKER - 4" P.M. WITH OUTPUT TRANSFORMER MTD.	SP-47-10A

CHASSIS SERIES "AR"

I.F. - 455 K.C.

FREQ. RANGE - 532.5 to 1620 K.C.
ALIGN T_2 at 1620 K.C.
T_1 at 1400 K.C.
TRACK at 600 K.C.

©John F. Rider

Compliments of www.nucow.com

GANGING INSTRUCTIONS

MODEL OJ Series

An OUTPUT METER, connected to the speaker voice coil terminals, should be used for accuracy in making ganging adjustments.

The voice coil terminals, as well as the I.F. trimmers, may be made accessible by removing the screws by which the motor panel is mounted in the cabinet. Before lifting off the phono-recorder unit, MOVE THE PHONO. ARM TO THE CENTER OF THE TURNTABLE, and permit the arm to maintain this position until after the unit has been restored to the cabinet. In this way, the follower arm which engages the lateral feed screw will be protected against damage.

The R.F. trimmers and loop loading coil may be reached by raising front edge of panel.

Connect signal generator to control grid of 6BE6 tube.*

SIGNAL GENERATOR FREQUENCY	DIAL POSITION	TRIMMER
456 K.C.	1400 K.C.	T2-S** (Top Screw)
456 K.C.	1400 K.C.	T2-P** (Bottom Screw)
456 K.C.	1400 K.C.	T1-S** (Bottom Screw)
456 K.C.	1400 K.C.	T1-P** (Top Screw)

Place hot lead from signal generator near antenna loop.

1400 K.C.	1400 K.C.	C-3 OSC.
1400 K.C.	1400 K.C.	C-2 ANT.
600 K.C.	600 K.C.	L-2 Loop Loading Coil

* Check the alignment of pointer with reference line below 550 K.C. on the scale. The pointer may be slipped on the shaft to correct for misalignment.

** In ganging the I.F. amplifier, use a low signal input.

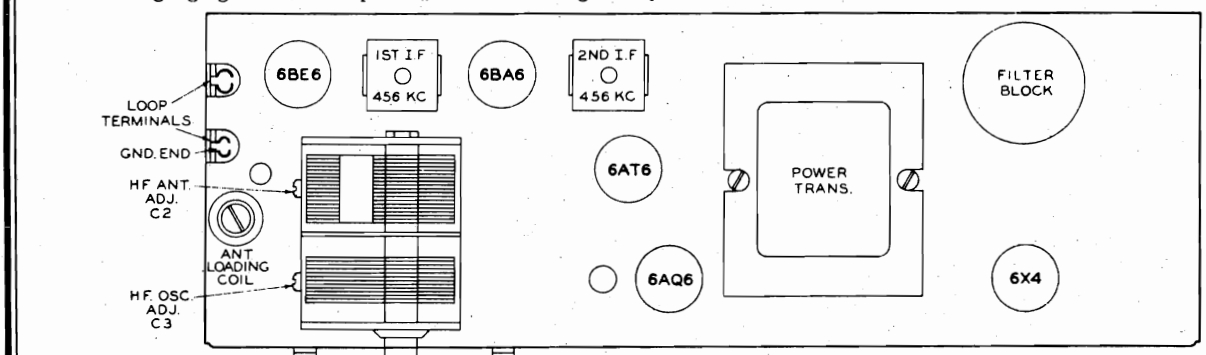

TUBE SOCKET LAYOUT

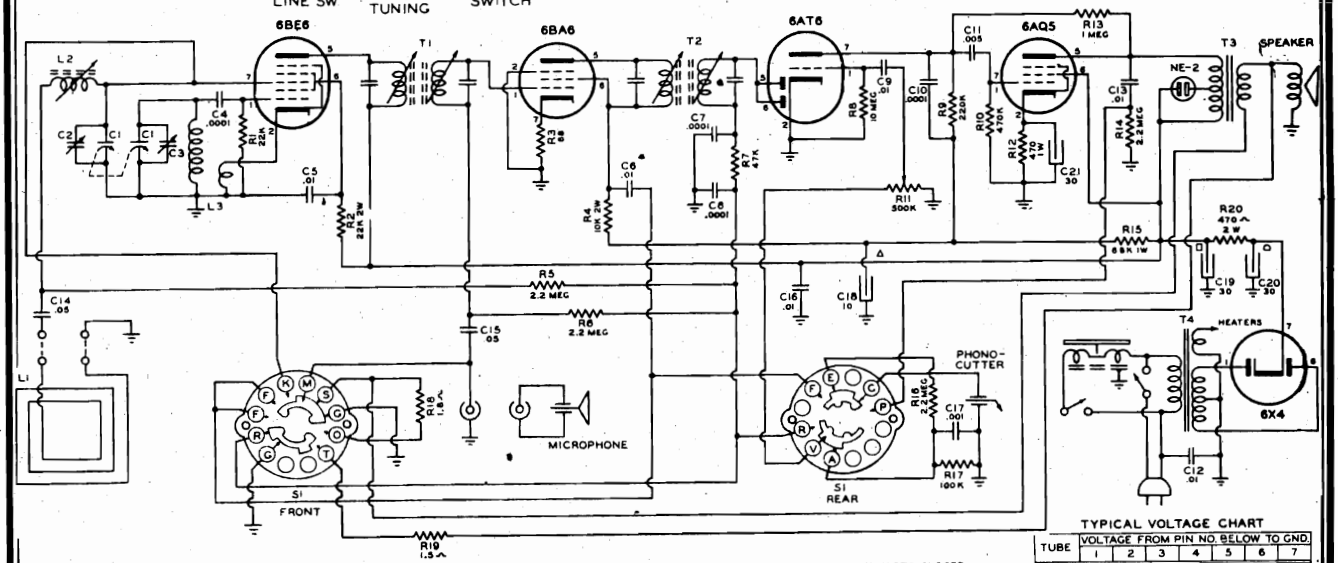

FUNCTION	SWITCH CONTACTS CLOSED			
PHONOGRAPH	R-G	M-S-G	E-C	A-V
RADIO	G-F	M-S-G-O		V-R
RECORD RADIO	G-F	M-G-O-T	C-P	V-R
RECORD MICROPHONE	G-R-K	O-T	C-P	V-F

SWITCH IN PHONO POSITION-(COUNTERCLOCKWISE)-VIEWED FROM SHAFT END.

NOTE -
ALL CAPACITIES MFD. ALL RESISTORS ½ WATT UNLESS OTHERWISE SPECIFIED

TYPICAL VOLTAGE CHART

TUBE	VOLTAGE FROM PIN NO. BELOW TO GND.						
	1	2	3	4	5	6	7
6BE6	-6.7V		GND	6.3V*	250V	95V	
6BA6			GND	6.3V*	78V	78V	.7
6AT6	-.3	"	GND	6.3V*	-.3V	-.3	70V
6AQ5		14.5	GND	6.3V*	235V	250V	
6X4	290V*		GND	6.3V*		290V*	270V

MEASURED WITH 20,000~ PER VOLT METER. SCALES USED 10-50-250-1000 *AC. VOLTAGE

©John F. Rider

Compliments of www.nucow.com

Compliments of www.nucow.com

Admiral Record Changers RC220, RC221, RC222; RC320, RC321, RC322, early, late production

Record Changers RC221 and RC222 appear on *record changer pages RCD. CH. 20-9 through RCD. CH. 20-20 of Rider's Manual Volume XX.* RC220, RC320, RC321, and RC322 are similar to RC221 and RC222.

The only changes which were made in the late production RC220, RC221, and RC222 changers were the addition of the turntable retaining ring and the trip counterweight, reference number 138. Two types of turntable retaining devices have been used. The early type was a flat external retaining ring (part no. 401A286) which is no longer used. This has been replaced by the present retaining clip (part no. 414A36). When installing this clip, be sure that its "turned-up" ends are facing upward. The trip counterweight was added to eliminate erratic trip action because of a weak or stretched trip cocking spring (ref. no. 110). The trip cocking spring is no longer used. In order to mount the trip counterweight it was necessary to tap the trip lever (111) to accomodate the trip counterweight mounting screw (ref. no. 139).

In the parts list for RC221 and RC222, reference number 17, pickup arm, should have 403C35 as its part number.

The only difference between late production RC220, RC221, RC222 changers and RC320, RC321, RC322 changers is in the method of mounting the pawl and the trip serration plate. This change was made to simplify the adjustment for proper trip on 7-inch 33⅓-rpm records and 10-inch and 12-inch 33⅓-rpm or 78-rpm records. The oscillating trip is used for these types of records.

In the RC320, RC321, RC322 changers, the shape of the pawl (ref. no. 141A) has changed slightly from that shape given in *Volume XX,* and it is now mounted where the trip serrations plate (ref. no. 114) was mounted. The pawl and trip serrations have merely reversed their mounting positions. The accompanying figure shows the layout for this change.

All adjustments on the RC320, RC321, and RC322 changers are the same as for the RC220, RC221, and RC222. The ideal adjustment of the oscillating trip adjusting screw is when the point of the pawl is horizontally even or level with the smooth side of the trip serrations.

In late production of RC320, RC321, and RC322, the 45-rpm centerpost cap (ref. no. 63) was changed to slightly decrease the over-all height of the cap and to include two extra ribs which help prevent the possibility of bending the slicers (65 and 66) if the 45-rpm centerpost adjustment is improperly made. The new centerpost cap is interchangeable with the old cap and should be used when replacing any centerpost cap. Two new cap mounting screws listed below should be used instead of the old type screws.

A felt washer is used between the changer pan and the motor mounting grommet at the mounting stud closest to the centerpost. This prevents the motor from tilting.

The parts listed below include corrections and additions to the parts list that appears for RC221 and RC222. It also contains all new parts for the RC320, RC321, and RC322 changers. For any parts not listed here see the parts list on *page RCD. CH. 20-20 in Volume XX.*

Ref. No.	*Part No.*	*Description*
	414A 36	Turntable retaining clip
	5A4-1	Felt washer (¼" ID x ¾" OD x 1/16")
17	403C 35	Pickup arm
63	403A 303	Centerpost cap (new, use on all models)
73	60-1125-C2-47	Screw (2 req.) 6-32 x 1⅛" BH MS
138	402A 203	Trip counterweight
139	85-187-C2-47	Screw, 8-32 x 3/16" BH MS
140	G400A 361	Trip lever and reject arm support
141	G400A 353	Trip engagement and adjusting plate (includes pawl)
141A		Pawl (part of 141)
142	G400A 357	Arm control lever (includes trip serrations)
142A		Trip serrations (part of 142)
	405A 112	50 cycle conversion spring for 33-1/3 rpm shaft
	405A 113	50 cycle conversion spring for 78 rpm shaft
	98A 15-15	50 cycle conversion pulley (45 rpm).

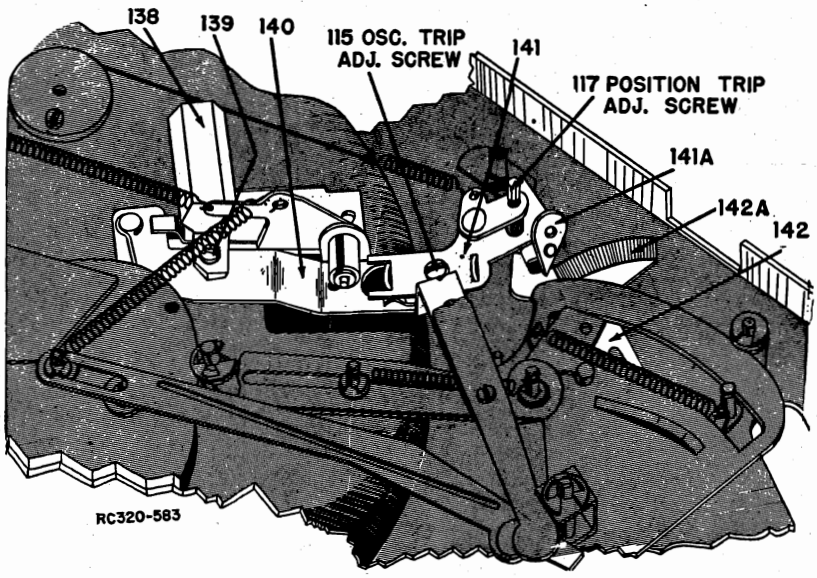

Bottom view of Admiral RC320, RC321, RC322 Record Changers.

Bendix 75B5, 75M5, 75M8, 75P6, 75W5

These models appear on *pages 20-16 through 20-23 of Rider's Manual Volume XX.* It has been found possible to reduce the hum level in these models by installing a choke in the output circuit to the speaker as shown in the accompanying diagram.

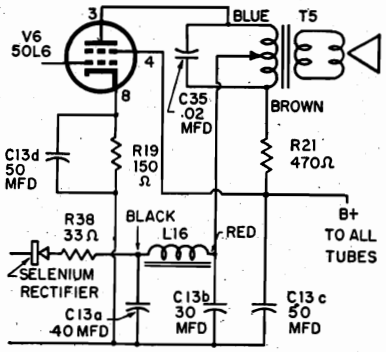

Changes for Bendix 75B5, 75M5, 75M8, 75P6, 75W5.

Remove capacitor C35, 0.02 μf, connected from pin 3 of the 50L6 (V6) tube socket and terminal board. Remove red lead from pin 4 of 50L6 tube socket and terminal of electrolytic, C13c. Remove resistor R55, 470 ohms, from pin 6 of 50L6 tube socket and terminal board.

Move the pickup point of brown lead of output transformer from the terminal board to pin 6 of 50L6 tube socket. Move the red lead from terminal C13a, 40 μf, to terminal C13b, 30 μf, of electrolytic capacitor C13.

Drill a hole through the chassis near the electrolytic capacitor for the leads of an added reactor, L16. This choke is available as Bendix stock number LFOIO2. Bend one ear of reactor L16 and mount on top of chassis by soldering both ears to the chassis, or holes may be punched in each ear and the reactor mounted with self-tapping screws. Insert the reactor leads through the hole.

Since leads of capacitor C35, 0.02 μf, are too short, install new capacitor C35 between pins 3 and 6 of 50L6, with tubing over the positive lead, and negative capacitor plate attached to pin 3.

Connect red lead of added reactor L16 to terminal C13b, 30 μf, of electrolytic capacitor C13. Connect black lead of added reactor to terminal C13a, 30μf, of electrolytic capacitor C13.

The connection of bypass capacitor C56 has been changed from chassis ground to common B— to eliminate a-c hum modulation. If hum is objectionable on a receiver not using an external antenna, this revised connection is recommended. Capacitor C63, 0.001 μf, is now connected to common B—, instead of to pin 11 of S1B.

To clarify the adjustments in step 4, FM Alignment-CW Meter Method on *page 20-18,* revise it to read as follows:

"Repeat steps 1, 2, and 3 until adjustment in step 1 does not require a readjustment to produce a zero reading on the VTVM in step 3."

The extended length of the spring in the dial cord of 75B5, 75W5, 75M5, and 75M8 has been designated as 1¼ inches minimum, to 1⅜ inches maximum. Revise Fig. 9 on *page 20-21* to show only 2 turns around the lower shaft in lieu of 4 turns originally indicated. The maximum dimensions of 1⅜ inches should also be indicated for spring attached at dial-cord drive wheel.

©John F. Rider

Compliments of www.nucow.com

Ansley 709

Model 709 is the same as Model 53 which appears on *pages 17-1,2 through 17-5 of Rider's Manual Volume XVII.*

Automatic A.T.T.P.

The alignment and battery information that appears on *page 17-8 of Rider's Manual Volume XVII* under the heading of Models 660, 662, 666, Series C is labeled incorrectly. This page should be labeled Model A.T.T.P. The schematic for Model A.T.T.P. appears on *page 16-1 of Rider's Manual Volume XVI.*

Automatic C-65

This model is the same as Model C-60X which appears on *page 16-1 of Rider's Manual Volume XVI.*

Bendix 95B3, 95M3, 95M9

The switch and its components for the long-playing record player have heretofore been mounted on the back cover. To avoid future difficulty in removing the back cover, this switch and its components are now mounted on a bracket attached to the rear of the cabinet. The bracket is mounted on the top rear cabinet rail and is placed so that the switch, in Models 95B3 and 95M3, extends through the ventilation louver in the upper left corner of the back cover. The strip between the louvers in Model 95M9 covers the switch and it is necessary to remove the strip between the louvers from the back cover.

The terminals of the gang capacitor are numbered from the front to the rear of the chassis as is indicated in the accompanying diagram. In the figure showing trimmer location, the capacitor designated in the r-f subchassis as C8, is C4. Resistor R56 has been added to the circuit to avoid any possibility of regeneration occurring, and this resistor is soldered from terminal 5 of the gang capacitor directly to capacitor C4. The other lead of capacitor C4 remains connected to terminal 3 of the gang capacitor as indicated in the diagram. On the schematic diagram, resistor R56 should be inserted in the a-m external lead between terminal board J6 and capacitor C4. Add R56, Comp., 1,000 ohms, ¼ w, Part No. RC22A102M to the replacement parts list.

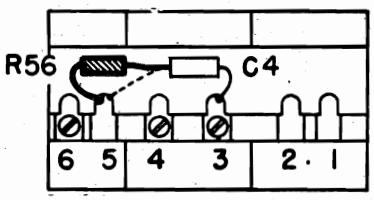

Terminals of gang capacitor used in Bendix 95B3, 95M3, 95M9.

An additional filter capacitor C65 has been added to the avc circuit. The 470-$\mu\mu$f capacitor goes from terminal 10 of switch S1C to chassis ground. Add capacitor C65, Mica, 470 $\mu\mu$f, 500 v, Part No. CM5A38 to the replacement parts list.

The figure showing the f-m antenna should show 26" as the dimension for the lower half of the f-m antenna, instead of 6". The dipole should measure 26" on both sides of the center leads.

Farnsworth P-8

This a-m—f-m radio chassis used in Models 1002-F, 1003-M, and 1004-B, is identical to the P-7 chassis which appears on *pages 19-19 through 19-33 of Rider's Manual Volume XIX,* with the exception of the phono-input circuit. The differences are listed below:

1. The P-7 chassis employed a separate phono preamplifier stage; the P-8 does not.
2. Since the P-8 does not employ a preamp, the preamp power cable and plug and the 3.3-ohm resistor, ref. no. 14, are not included in this chassis.
3. The record changer, Capehart "333", used with the P-8 chassis employs a crystal pickup. Therefore, a 680,000-ohm, ½-watt resistor is connected from the phono-input lead to chassis ground.

Following is a list of parts which apply to the Models 1002-F, 1003-M, and 1004-B. These parts are different from those shown for the P-7 chassis.

Part No.	*Description*
650189A-G1	Loop antenna assembly
59534	On-off volume and tuning knobs
59535	Band switch knob
59537	Treble tone knob
31472	Glass escutcheon.

Farnsworth P-10

This a-m—f-m radio chassis used in Model 100-M, is identical to the P-10 chassis which appears on *pages 19-19 through 19-33 of Rider's Manual Volume XIX,* with the exception of the phono-input circuit.

In Model 1001-M, the P-10 chassis employs a 680,000-ohm resistor, from phono-input to chassis ground, instead of a 100,000-ohm resistor, ref. no. 15.

Following is a list of parts which apply to Model 1001-M. These parts are different from those shown in the Manual for the P-10 chassis.

Part No.	*Description*
650183A-G1	Speaker, 10" PM, output trans. assy.
750114B-1	Glass escutcheon
650189A-G1	Loop antenna assy.
650186A-4	On-off volume knob
650186A-2	Tuning knob
650186A-1	Band switch knob
650186A-3	Tone control knob.

Farnsworth P73

This model appears on *pages RCD. CH. 18-1 through 18-9 of Rider's Manual Volume XVIII.* The following part should be added to the parts list:

71245 Removal needle only, osmium tipped (P73).

Farnsworth Service Hints

The following service suggestions are offered in the event that the P70 series changers occasionally drop two or more records at one time. If this situation exists with new records, in which the center hole is not worn, the cause may be one of the following:

1. Misadjustment of the amount of tension on the compression spring (part no. 58789). This adjustment is on the underside of the compression lever assembly (part no. 15195) and consists of the adjustment nut (part no. 37344) and the lock-nut and washer (part nos. 2015-002 and 2121-003). Adjustment of this nut controls the amount of downward pressure exerted on the upper spindle assembly (part no. 13674) by the compression lever, which in turn controls the degree of expansion of the rubber sleeve (part no. 62152). Reference is made to paragraph "D", *page RCD. CH. 19-8 of Rider's Manual Volume XIX,* of the P71 record changer material for proper adjustment of the compression lever. If the rubber sleeve does not expand sufficiently to hold the remaining records on the spindle, one or more of these records will drop along with the record that is to be played. If this sleeve does not expand to the required value, the adjustment nut (37344) should be adjusted while the rubber is compressed to provide the correct expansion: After the adjustment is set, the lock nut should be tightened, and a small amount of Glyptol applied to secure the adjustment.
2. Incorrect position of the outer spindle (part no. 55334). The outer spindle is fastened to the main frame by a special hex-head bolt (part no. 37334) located on the underside of the main frame. The proper position of the outer spindle is given in relation to the inner spindle (part no. 11379) when the changer is in playing position and with no records on the spindle. Under these conditions the top of the outer spindle should be 1/16" below the point of bend of the metal springs on the inner spindle which form the spindle shelf. If the outer spindle is too high, the spindle shelf will recede into the outer spindle before the rubber sleeve is fully compressed, leaving the records without support.
3. If neither of the two previously mentioned suggestions corrects the situation, it is further suggested that the compression lever assembly (part no. 15195) be inspected to determine if the metal roller on this assembly has a diameter of 1/4" or 5/16". If it is the smaller diameter, replace it with one employing the 5/16" roller. The replacement of this compression lever will require a readjustment of the compression spring (part no. 58789) tension.

General Electric 64, 65, 66, 67, 123, 124, 125, 135, 136, 226

These models are found in *Rider's Manual Volume XX.* Models 64 and 65 appear on *pages 20-3 through 20-8;* 66 and 67 appear on *pages 20-9 through 20-12;* 123, 124 and 125 appear on *pages 20-13 through 20-15;* 135 and 136 appear on *pages 20-16 through 20-18;* and Model 226 appears on *pages 20-27 through 20-29.*

Power-supply filter resistor URF-053, 1,500 ohms, 2 watt, carbon in earlier receivers has been changed in later production to URF-049, 1,000 ohms, 2 watt, carbon. Some of the early Model 135 and 136 receivers will be found to have a 2,200-ohm resistor. URF-049, 1,000 ohms, 2 watts, is recommended for service replacement of the filter resistor and will result in improved tube performance.

Late production receivers incorporate an i-f tube change from the 12SK7 tube of early receivers to a miniature type 12BA6. The tube-pin connections are not the same as those for the 12SK7 tube. This should be considered when reading the diagrams of early production receivers. A tube socket for the 12BA6 tube has been added to the Replacement Parts List and catalogued RJS-141.

For Models 64, 65, 66, 67, 123, 124, and 125, a 47-ohm, ½-watt, carbon resistor, part number URD-017, is used in series with the 12BA6 tube cathode to B— to improve circuit stability.

©John F. Rider

Compliments of www.nucow.com

General Electric 50

This model appears on *pages 15-1 through 15-4 of Rider's Manual Volume XV*. The following items should be added to the parts list:

Symbol	*Part No.*	*Description*
R4	RRC-013	1.0-megohm volume control
	RJS-060	Tube socket, miniature tube socket for 35W4 rectifier
	RJX-010	Assembly, tube socket and mounting plate assembly for 35W4 rectifier.
	RHH-004	Snapfastener, for mounting cabinet-back.

General Electric 106

This model appears on *pages 15-9 through 15-10 of Rider's Manual Volume XV*. Part no. RJX-005 should be changed to read RJX-007. Delete part no. ROP-006. Add part no. UOX-001, cone, replacement speaker cone.

General Electric 115, 115W

These models appear on *page 18-13 of Rider's Manual Volume XVIII*. The following changes have been made in the parts list.

Delete catalogue numbers and parts RDK-121 and RDK-122.

Add the following:

RAG-019	Grille, for Model 115 and 115W
RDK-150	Knob and bezel, brown, for Model 115
RDK-151	Knob and bezel, white, for Model 115W.

General Electric 118, 119

These models appear on *pages 19-8 through 19-10 of Rider's Manual Volume XIX*. The following changes should be made in the parts list. RLC-001 should be changed to RLC-061, T4, coil, oscillator coil. RAY-054 should be RAV-054.

Add:

RAV-056	Cabinet, Model 119 (oak)
RDK-037	Knob, plain, fawn colored
RDK-040	Knob, with arrow, fawn colored
RHH-004	Snapfastener, holds cabinet back to cabinet on Model 118

General Electric 123, 124

These models appear on *pages 20-13 through 20-15 of Rider's Manual Volume XX*. The following changes should be noted in the replacement parts list. Item RDS-083 is a metal dial scale, tan color, with red and white figures. Later production receivers use the same type scale except for color. The later scale, cat. no. RDS-091, is gold in color, with brown and white figures.

The following catalogue numbers have been changed: URD-127 should read URD-137, R5, Resistor, 4.7 megohms, ½ w, carbon; RAU-037 should read RAU-307, Cabinet, Model 124 plastic cabinet (ivory).

General Electric 303

This model appears on *pages 15-37 through 15-39 of Rider's Manual Volume XV*. The symbol for RSW-019, switch, tone control switch, should read S4. Stock no. RMX-013 should be changed to read stock no. RMX-079.

General Electric 125

This model is identical mechanically and electrically to the late production Model 123 and 124 receivers, which appear on *pages 20-13 through 20-15 of Rider's Manual Volume XX*. Model 125 is identified by its maroon color plastic cabinet. The cabinet replacement is listed as: RAU-321, Cabinet, plastic, for Model 125.

General Electric 123, 124, 125, 135, 136, 226

Models 123, 124, and 125 appear on *pages 20-13 through 20-15 of Rider's Manual Volume XX*. Models 135 and 136 appear on *pages 20-16 through 20-18 of the same Volume*. Model 226 appears on *pages 20-27 through 20-29 of the same Volume*.

The grid resistor, URD-113, 470,000 ohms, ½ watt, carbon, has been changed in later production receivers to URD-121, 1 megohm. This change improved the audio gain.

General Electric 135, 136, 226

Models 135 and 136 appear on *pages 20-16 through 20-18 of Rider's Manual Volume XX*. Model 226 appears on *pages 20-27 through 20-29 of the same Volume*.

Late production receivers use a new type output transformer having a tapped primary. The tapped section to the B+ lead is connected in series with the power-supply filter resistor at the input filter capacitor. B+ ripple current through this winding is out of phase with ripple current to the receiver tubes, thus producing bucking voltage and reducing hum. The transformer leads are connected as follows: yellow to input filter capacitor, red to filter resistor, blue to plate of input tube, and secondary leads to speaker voice coil.

The new transformer, catalogue number RTO-078, will be carried in replacement stock in place of the original early production items RTO-063 and RTO-075 for the Models 135, 136, and 226, respectively.

General Electric 141, 143

Instability on the high end of the broadcast band might be caused by an oscillator coil whose coupling winding has changed its coupling capacitance. This defect can be corrected by replacing the coupling winding with a capacitor C15 of the value 56 $\mu\mu$f, catalogue number UCG-022. This capacitor connects the "high" side of the tuning capacitor C2 with the oscillator grid, pin 4, of the tube V1, 1R5.

Late production receivers always use capacitor C15 in conjunction with a new type of oscillator coil, RLC-101. This item replaces coil formerly catalogued RLC-089.

The hinge used in these receivers can easily be removed and replaced in the plastic cabinet or cover by the application of heat. To remove the hinge from the back cover or cabinet proper, heat the hinge at the half to be removed from the cabinet with a soldering iron. The hinge may then be pulled out of the groove of the plastic hinge recess. Since the cabinet plastic softens at a relatively low temperature, it will be unnecessary to apply the heat very long. To replace the hinge into the new unit, first start the hinge into the slotted recess in the plastic, then heat the hinge with the soldering iron and gently push the hinge into place.

General Electric 124, 135, 136

Model 124 appears on *pages 20-13 through 20-15 of Rider's Manual Volume XX*; Models 135 and 136 appear on *pages 20-16 through 20-18 of the same Volume*.

Where speakers have broken loose from cabinet mountings, or damage occurs when servicing receiver, the speaker can be remounted using screws in place of the original clips where the mounting bosses are broken. It is suggested that all four bosses be reworked to use screws for mounting, since the operation of removing the speaker may result in the breaking of additional bosses. The repair procedure is outlined as follows:

1. Cut off speaker mounting bosses and file flat to the level of the speaker baffle ring.
2. Drill hole 5/16-inch deep in each boss with #42 or 3/32-inch diameter drill.
3. Mount speaker with self-tapping screws #4 x ¼ inch long, Shakeproof Type 25, catalogue number RHS-044.

General Electric 233 Kaiser-Frazer

This model appears on *pages 18-29 through 18-36 of Rider's Manual Volume XVIII*. Noise in the form of rattle can be attributed to mechanical insecurity of parts, loose fittings, and screw fastenings, etc. Some of these are:

1. Loose tone control knobs and loose tone and volume control shafts may rattle against the cast grille. The keyway in the tone control shaft may be spread slightly to provide a tighter fit to the control knob.
2. If the shaft assembly seems loose or tends to rattle within the grille mounting hole, a ¾-inch length of #1 spaghetti (fabric or cambric tubing) may be slipped over the shaft assembly and into the bushing. This will displace the loose fitting and cushion against rattle.
3. Vibration of the screen which is set behind the case instrument panel grille causes a buzz sound when loose. The screen may be shimmed at its four corners to stabilize its mounting.

Suggestions for improving circuit and pick-up noise are as follows:

1. The former condition can be improved by antenna selection and careful peaking of the antenna trimmer to increase sensitivity and reduce noise. For metropolitan areas, a 62-inch antenna is quite adequate, while in outlying country areas the antenna length of 93 inches is recommended. Adjustment of the antenna trimmer is important and should not be overlooked. Every receiver installation should be adjusted for normal operation after the receiver has been operating approximately 15 minutes to reach normal operating temperatures, and with antenna fully extended. Tune in one of the weakest stations at approximately 1,200 kc, or near the higher-frequency end of the dial scale. Adjust trimmer for minimum noise level and maximum clarity on station used for test.
2. Noise pick-up may come from various sources, chiefly from ignition circuits of the car. The recommended noise suppressor and noise filter capacitor units should be checked. To eliminate wheel static insert about ½ ounce of powdered graphite through the valve of all four tire tubes. This will provide a ground leakage path to dampen static radiation.

©John F. Rider

Compliments of www.nucow.com

General Electric 143

The connection between terminal number 4 of the 2nd i-f transformer to the 8,200-ohm resistor R2 is connected at the intersection with the B+ line. Late production receivers incorporate the following changes in order to improve the i-f stability. A 0.05-μf, 200-volt paper capacitor has been added in parallel with resistor R9. This capacitor has a reference number of C16 and stock number UCC-045. Capacitor C5 has been changed to a 0.1-μf, 200-volt capacitor, stock number UCC-050.

General Electric 145

The following parts have been added to provide replacement of the battery cover plate and assembly parts:

Ref. No.	*Description*
RAC-078	Cover, cover plate only
RHR-009	River, "A" battery spring rivet
RHR-010	River, "A" battery clip rivet
RHW-014	Washer, "A" battery spring washer
RII-027	Insulator, insulator strip
RMC-037	Clip, battery clip
RMS-189	Spring, "A" battery spring.

The following miscellaneous parts have been added. Most of these parts are required because of the addition of brown and white cabinets.

Ref. No.	*Description*
RAB-093	Cover, back cover (white)
RAB-094	Cover, back cover (brown)
RAC-063	Cover, loop cover (maroon) substitute for RAC-057
RAC-069	Cabinet, main body (brown) includes hinge
RAC-070	Cabinet, main body (white) includes hinge
RAC-071	Cover, front cover (white) includes hinge
RAC-072	Cover, front cover (brown) includes hinge
RAC-075	Cover, loop cover (white)
RAC-076	Cover, loop cover (brown)
RAI-007	Stop, cover stop
RDK-173	Knob, brown control knob
RHR-004	Rivet, tube socket rivet
RHY-009	Handle, cabinet handle
RSW-070	Switch, power, operates in conjunction with lid.

General Electric 226

This model appears on *pages 20-27 through 20-29 of Rider's Manual Volume XX*. Resistor R1, tube V1 cathode resistor, was removed from the circuit of late production receivers. This change results in an increase of gain in the r-f amplifier.

Solid dots indicating circuit wiring connections should be added and placed in the cathode lead of tube V4, one at the point where the lead intersects the lower end of R7, the other at the junction of R6 (low end of volume control) and C10. The circuit will then show the cathode properly terminated to B—.

Replacement item RTO-075 should read RTO-083, Audio output transformer.

General Electric 250

This model appears on *pages 15-32 through 15-36 of Rider's Manual Volume XV*. With particularly rough handling, the battery may be cracked while in place in the battery compartment. To forestall this failure, an additional strip of sponge rubber may be installed at the bottom of the battery cover to give added padding. If the battery does not charge and the fuse checks o.k. and the rectifier disks are not defective, check continuity of the power cord. A few isolated cases have been found in which the power cord has opened up where the cord fastens to the prong in the molded plug. An appreciable increase in duration of operation from a fully charged battery can be effected in the following manner, realizing, however, that some degree of performance is sacrificed in regard to sensitivity and power output. Replace power-supply filter resistor R17 (1,500 ohms) with a 4,700-ohm, 1-watt, carbon resistor. This change should be made only when there is a demand for longer duration of operation to one battery charge.

General Electric 200 Series

These models appear on *pages 18-19 through 18-20 of Rider's Manual Volume XVIII*. The following changes should be added to the parts list:

RHM-002	Clip, for mounting speaker board
RHM-004	Clip, dial scale mounting clip for plastic cabinet models
RHM-005	Clip, dial scale mounting clip for wood cabinet models.

General Electric 250, 260

Model 250 appears on *pages 15-32 through 15-36 of Rider's Manual Volume XV*. Model 260 appears on *pages 16-6 through 16-12 of Rider's Manual Volume XVI*. Add REC-003, Antenna loop connector strip to the parts lists for these models.

General Electric 356

This model appears on *pages 18-40 through 18-44 of Rider's Manual Volume XVIII*. Resistor R12 has been changed from 220 ohms, ½ w, to 330 ohms, ½ w, ±10%, Cat. No. URD-037.

B. F. Goodrich 92-527, 92-528

These models are the same as Models 92-523, 92-524, 92-525, 92-526.

B. F. Goodrich 93-109, 93-110, 93-111

These models are the same as Models 93-104, 93-105, 93-106.

B. F. Goodrich 93-112, 93-113

These models are the same as Models 93-107 and 93-108.

Hoffman C503 and C513, Ch. 115

These models are identical with Models B503 and B513, which appear on *pages 17-8 through 17-13 of Rider's Manual Volume XVII*, except for the following changes:

1. Push-pull parallel 6K6's are used in the output stage instead of push-pull 6V6's. This is shown in the accompanying diagram.

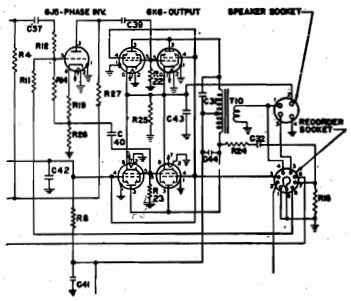

Circuit changes for Hoffman C503 and C513.

2. On the recorder amplifier the screen dropping resistor R11 has been changed from 0.1 megohm to 2.2 megohms. The cathode resistor, R1, for this stage has been changed from 2,200 ohms to 4,700 ohms. This allows the screen current of the 6SJ7 tube to be self-regulating and to eliminate variations in gain between various 6SJ7's.
3. R31 and C49 have been added in parallel to the S1-sec 2, rear, wafer lead that goes to the phonograph receptacle.
4. Capacitor C30 is now connected to the variable resistor, R20, instead of to ground.

Magnavox AMP-101B

This model is the same as Model AMP-101A which appears on *pages 17-1 and 17-2 of Rider's Manual Volume XVII*, except for the following change in parts values.

Ref. No.	*Part No.*	*Description*
5	250129G4	Capacitor, paper, 0.03 μf, 400 v.

Montgomery Ward 04WG-672 Series

Model 04WG-672 appears on *pages 12-31 and 12-32 of Rider's Manual Volume XII*. Models A and B are the same as that model which appears in Volume XII. Models C, D, and E are similar to Model 04WG-672 with the following exceptions. Model C employs a plug-in resistor, R13 and R12. The values remain the same as in the earlier models. Model D employs the plug-in resistor and, in addition, a new oscillator coil and 2 section dry electrolytic capacitor. In Model E the loop antenna assembly has been redesigned.

Montgomery Ward 05WG-2745A

This model is the same as Model 94WG-2745A. To reduce regeneration in later production receivers, the following changes were made:

Ref. No.	*Part No.*	*Description*
		Removed
L-1	35A5	Insulated choke
C-6	47X496	500 μμf ceramic capacitor
		Added
R-37	B84562	5,600-ohm, 0.5-w carbon resistor. This resistor replaces the insulated choke L-5 in the circuit diagram.

Montgomery Ward 14WG-518A, 14WG-519A, 14WG-518B, 14WG-519B

These models are similar to Model 14WG-518 and 14WG-519 which appear on *page 13-46 of Rider's Manual Volume XIII*.

Montgomery Ward 64WG-2007B, 74WG-2007B and C

These models are similar to 54WG-2007A shown on *pages 15-28 to 15-30 of Rider's Volume XV*, except for the following changes. The drive-cord length has been increased and the following drive-cord replacement instructions are to be used.

Turn the gang condenser to the fully closed position. Use a new drive cord 18 inches in length and tie one end to the tension spring. Fasten the other end of the tension spring to the hook on the drive pulley. Pass the cord through the slot in the drive pulley rim and continue around pulley ½ turn, counterclockwise. Wind 3½ turns counterclockwise (from front of chassis) around tuning shaft. Turns should progress toward rear of chassis. Wind cord counterclockwise around drive pulley in back of previous ½ turn. Pass cord through the slot in the pulley rim. Stretch tension spring and tie free end of cord to the spring. Cut off any excess string.

The component parts are the same as those listed on *page 15-29 of Rider's Volume XV*, except for those listed below.

Ref. No.	*Part No.*	*Description*
C-15	B67204	0.20 μf, 200 v, tubular
C-16	D67104	0.10 μf, 400 v, tubular
C-18	D67102	0.001 μf, 400 v, tubular
C-19	17A123	1.0—12 μμf, trimmer.

©John F. Rider

Compliments of www.nucow.com

Montgomery Ward 74WG-2700C

This model is the same as Model 54WG-2700A that appears on *pages 15-31 through 15-35 of Rider's Manual Volume XV*. The parts lists are the same except for the following changes:

Ref. No.	*Part No.*	*Description*
C2	17A149	1.8-12 μμf, loop antenna trimmer
C6	17A234	300-450 μμf, 600 kc, padder
C7	D67501	0.0005 μf, 400 v, tubular
C16	14A150	Gang condenser assembly
C32	47X182	7 μμf, ceramic
T6	53X235	117 v, 60 cycle, standard power transformer
T7	9A1395	"B" band loop antenna
	12A455	10" electrodynamic speaker, cone and voice assembly
	19X432	Flat washer
	26A382	Pulley mtg. plate assem. complete with idler pulleys, idler studs, brace brackets, string guide and dial background
	10X59	Drive cord
	28X113	Drive cord tension spring
Type V-28A139 Record Changer Parts		
	V-961B	Motor assembly 60 cycle, 115-120 v
Shure	P30-1	Crystal cartridge and semi-permanent needle assembly.

Montgomery Ward 93WG-801A, 93WG-801B, 93WG-801C, 93WG-801D, 93WG-801E, 93WG-802A, 93WG-802B, 93WG-802C

Models 93WG-801A, 93WG-801B, 93WG-801C, 93WG-802A, 93WG-802B, and 93WG-802C are without the built-in loop and their schematics are the same as those for Models 93WG-801 and 93WG-802 that appear on *page 11-47 of Rider's Manual Volume XI*. Models 93WG-801D and 93WG-801E are with built-in antennas and their schematics are the same as that for Model 93WG-801 which appears on *page 11-46 of Rider's Manual Volume XI*.

Montgomery Ward 94WG-2748C

Model 94WG-2748C receivers differ from the Model 94WG-2748B receivers by the replacement of a V-28A166 record changer with a G.I.-28A168 record changer. The following are the parts applicable to the G.I.-28A168 record changer:

G.I. - 56-76507	Motor, 3-speed, 60 cycles 105-125 volts, a.c.
Astatic - LT3D	Crystal cartridge Needle, regular (78 rpm) Needle, microgroove (red).

Motorola KR9, OE9, PC9, SR9

These models are schematically identical to Ch. 8A. Model KR9 is designed for installation in the 1949 Kaiser-Frazer. Model OE9 is designed for installation in all 1949 Oldsmobiles and in the 1948 Futuramic Oldsmobile. Model PC9 is designed for installation in the 1949 Pontiac. Model SR9 is designed for installation in the 1949 Studebaker.

National Service Hints

The NC-57 appears on *pages 18-1 through 18-16 of Rider's Manual Volume XVIII*. Following is a list of troubles common to the NC-57 and suggestions for correcting them:

1. Audio oscillation with automatic noise limiter (ANL) on and a-f gain on full.
   a. Dress the primary leads to the output transformer under the ANL switch. Pull the excess length of leads through the hole to the top of the chassis.
2. Hum with ANL on and a-f gain on full.
   a. Change the 6H6.
3. Oscillation on B and C bands.
   Check C19 h-f osc. grid coupling capacitor. This should be 100 μμf. A higher value than this will produce oscillation. Also change the oscillator grid resistor from 47,000 to 22,000 ohms.
4. Parasitic oscillation on A band above 50 Mc.
   a. Check the ground lead of the r-f amp. screen bypass capacitor. This should be as short as possible and soldered to the lug on the socket mounting ring adjacent to pin 4. The r-f amp cathode bias resistor should be 220 ohms.
5. Noisy band switch.
   a. Poor contacts in the switch, and poor contact between the switch shaft and the ground brushes on ER 210 coils.
   b. Ground brushes on switch shaft rubbing on the coil partition of the ER 210 coils.
   c. Coil partition mounting screws not tightened down.
6. Noisy trimmer control.
   a. Shorted plates.
   b. Poor rotor brush contact or rotor brush not grounded to the mounting bracket.
   c. Rotor shaft grounding spring on front end of chassis is loose or missing.
7. Oscillation on E band at twice the i.f.
   a. Check to see that there is a metal shield mounted on the trimmer control bracket.

National Service Hints

The NC-183 appears on *pages 19-11 through 19-35 of Rider's Manual Volume XIX*. Following is a list of troubles and suggestions for correcting them:

1. Oscillation in the E band at twice and three times the i.f.
   a. Look for loose screws on sides of coil compartment.
   b. Be sure second i-f and avc amp. plate leads are down near the chassis.
   c. Be sure the diode leads of the 6H6 are down near the chassis.
   d. Check ground leads on side of coil compartment.
   e. Be sure that the first r-f grid lead is down near the chassis.
   f. Check ground at the end of the shield on the bfo lead near the 6H6 det. tube.
2. Oscillation at low end of the B band.
   a. Check ground on main tuning capacitor and the ground brushes on band-change switch shaft.
   b. Be sure first i-f plate lead is down near the chassis.
3. Pulling of signal with antenna trimmer on the A band.
   a. Check ground on band-change switch shaft.
   b. Check ground from tie rod on tuning capacitor to chassis.
4. Motorboating with both r-f and audio gains at zero.
   a. Check value of inverse feedback resistor R47. This resistor should be 4,700 ohms. A lower value than this will cause the motorboating.
5. Audio oscillation.
   a. Output transformer may be wired wrong.
   b. Connecting leads to the transformer may be reversed.
6. Hum with limiter on.
   a. Change limiter tube.
7. Back lash in main tuning or bandspread dials.
   a. Check end bearings of main tuning and bandspread capacitors.
   b. Check tension of spring on antibacklash gears.

Noblitt-Sparks Models 358T, 359T

Arvin Models 358T and 359T have the same chassis assembly as Models 152T and 153T which appear on *pages 18-1 through 18-3 of Rider's Manual Volume XVIII*. The only difference in these models is the color of the cabinet, rear cover, and knobs. The parts that differ from those listed in the 152T-153T parts list are as follows:

AA22993-1	Cabinet, sandal wood, for Model 358T
AA22993-2	Cabinet, willow green, for Model 359T
AC21696-3	Cabinet rear cover assy., willow green, for Model 358T
AC2169-4	Cabinet rear cover assy., willow green, for Model 359T
AC20501-3	Knob, gold for Model 358T and Model 359T.

Philco 50-1421 and 50-1422

These models are similar to Model 50-1420 which appears on *pages 20-183 through 20-188 of Rider's Manual Volume XX*, with the exceptions given below.

Model 50-1421 uses an M-9C record changer, which appears on *pages RCD. CH. 19-35 through RCD. CH. 19-54 of Rider's Manual Volume XIX;* while Model 50-1422 uses an M-20 record changer, which appears on *pages RCD. CH. 20-1 through RCD. CH. 20-16 of Rider's Manual Volume XX.*

The connection from pin 6 of the 12BE6 goes to tap 2 of the oscillator transformer, T400, instead of to tap 4 of Z300. Resistor R401, 47,000 ohms, is connected from pin 2 of the 12BE6 to pin 1, and the lead from pin 2 now goes directly to B—, instead of to tap 2 of T400. The lead from C400B goes to the avc.

The inside loop lead must be wired to the aerial section of C400, and the outside lead to the gang frame.

To prevent audio regeneration, the green lead from pin 1 of the 6AQ5 tube to the wiring panel must have excess wire dressed toward the 6AQ5 socket, and away from C203 and the blue lead of T200.

The replacement parts list for Model 50-1420 applies to Models 50-1421 and 50-1422, except for the differences indicated below:

Ref. No.	*Part No.*	*Description*
C100	45-3500	Capacitor, 0.04 μf
C204	61-0179	Capacitor, 0.004 μf
R200	33-5564-3	Volume control (with power on-off switch), 2 meg-ohms
R205	66-3568340	Resistor, 56,000 ohms
LS200	36-1629	Loudspeaker, p.m.
R306	66-0828340	Resistor, 82 ohms
C400	31-2751-3	Capacitor, tuning gang
R401	66-3478340	Resistor, 47,000 ohms
LA400	32-4375-1	Loop aerial, 50-1421 only
	40-7679-1	Baffle-and-cloth ass'y
	54-7745-3	Bottom cover
	10734-B	Cabinet
	56-7059FA9	Changer mtg. spring, 50-1422 only (3 required)
	56-7059-1FA9	Changer mtg. spring, 50-1422 only (3 required)
	76-4477-1	Drive shaft
	56-7001-1FCP	Pointer
	42-1847-2	Radio-phone switch.

©John F. Rider

Compliments of www.nucow.com

Philco Model 50-1423

This model is electrically similar to Model 50-1420, which appears on *pages 20-183 through 20-188 of Rider's Manual Volume XX,* except for the differences which are described below. Model 50-1423 is housed in a wood, table-model cabinet, with an M-20 record changer, which appears on *pages RCD. CH. 20-1 through RCD. CH. 20-16 of Rider's Manual Volume XX.*

The connection from pin 6 of the 12BE6 goes to tap 2 of the oscillator transformer T400, instead of to tap 4 of Z300. Resistor R302 now goes from pin 6 of the 12BE6 to pin 6 of the 12BA6. Resistor R401, 47,000 ohms, is connected from pin 2 of the 12BE6 to pin 1, and the lead from pin 2 now goes directly to B—, instead of to tap 2 of T400. The lead from C400B goes to the avc.

The green lead from the aerial section of C400 must be wired to the same loop panel lug as the inside loop lead (side away from cabinet), and the black lead must be wired to the same lug as the outside loop lead (adjacent to cabinet).

The white lead from the oscillator section of C400 must be dressed upward from the chassis, and away from the trimmer screw.

The yellow lead from Z301 to lug 12 of the wafer switch must be wired along the top side of the chassis, and dressed downward to the chassis.

The orange and brown leads wired to lugs 1 and 2 of the wafer switch must be wired along the removable side, and dressed downward to the chassis.

All wiring and components must be kept clear of R100, R101, and R102.

The under-chassis layout of Model 50-1423 differs from that of Model 50-1420. The parts layout of Model 50-1423 is shown in the accompanying figure.

Ref. No.	*Part No.*	*Description*
LS200	36-1629	Loudspeaker, p.m.
R200	33-5564-2	Volume control (with power on-off switch), 2 megohms, tapped at 1 megohm
T200	32-8242	Transformer, output
C400	31-2751-2	Capacitor, tuning gang
LA400	76-2127-9	Loop aerial
	10727	Cabinet
	56-5955	Apron
	40-7550	Baffle-and-cloth ass'y
	56-5931	Bezel
	54-7678-1	Bottom, celotex
	54-4579	Foot, rubber (4 required)
	54-4527-9	Knob, (3 required)
	45-6454	Lid
	56-6434	Butt hinge
	56-5992	Support
	56-7059FA9	Spring, changer mtg. (3 required)
	56-7059-1FJ47	Spring, changer mtg. (3 required)
	54-4630	Window, acetate
	54-5022	Dial scale, metal
	76-3731-1	Drive shaft
	56-6310	Heat shield, aluminum
	27-6233-6	Pilot-lamp-socket ass'y
	56-7001	Pointer
	27-4771-1	Rubber mount, tuning gang (4 required).

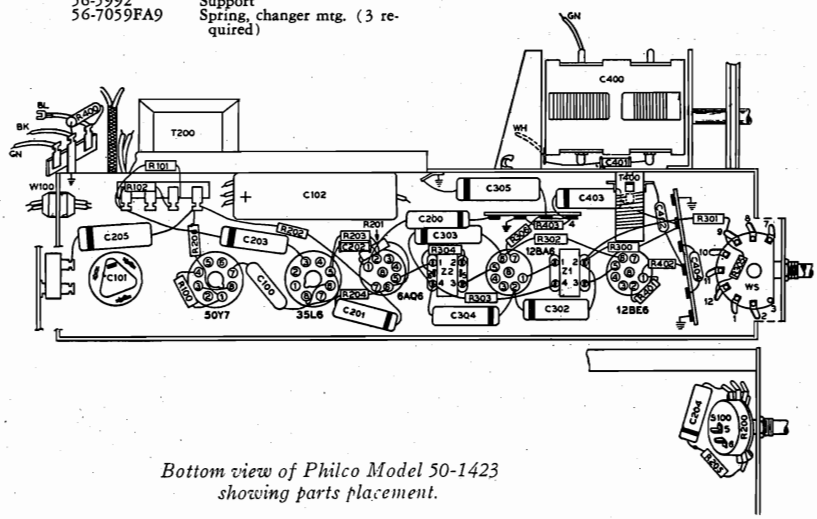

Bottom view of Philco Model 50-1423 showing parts placement.

Philco 50-526

Model 50-526 is similar to Models 50-522 and 50-524 which appear on *pages 20-153 through 20-157 of Rider's Manual Volume XX,* except for the following changes. Model 50-526 is housed in a new phenolic-plastic cabinet. The 1-megohm resistor, from the avc circuit, pin 5 of the 14B6 detector to B—, pin 4 of the same tube, that was listed under Modifications on *page 20-155* as R304, is designated now as R305. A 68-ohm resistor, R304, is added in the cathode line of the 12BA6 i-f amplifier. This resistor is connected from pin 7 of the 12BA6 to pin 7 of the 14B6. R301, the grid-return resistor, has been changed in value to 1 megohm.

In Run #2 the tuning gang, C400, has been changed to improve performance, and the new part number is 31-2751.

In Run #3, R301 has been removed to increase sensitivity.

The replacement parts list for Model 50-522 and 50-524 applies to Model 50-526 except for the differences indicated below:

Ref. No.	*Part No.*	*Description*
I100	34-2068	Pilot lamp, 6-8 volt, brown bead
R301	66-5108340	Resistor, grid return, 1 megohm
R304	66-0688340	Resistor, cathode bias, 68 ohms
R305	66-5108340	Resistor, avc load, 1 megohm
Z300	32-4160-6A	Transformer, 1st i-f
Z301	32-4240-2A	Transformer, 2nd i-f
LA400	32-4052-38	Loop aerial
	10769	Cabinet
	54-7911	Back
	40-7778	Baffle-and-cloth ass'y
	54-7761	Baffle, speaker
	76-5157	Dial backplate
	54-5069	Dial scale, glass
	54-4728-1	Grille, plastic
	54-5718-2	Knob (2 required)
	56-5630-14	Pointer
	57-1468FA1	Hairpin fastener, drive shaft
	27-6233-6	Pilot-lamp-socket ass'y
	56-3545-6FA3	Clip, pilot-lamp mtg.
	54-7953	Cover, pilot lamp
	56-7373FA3	Scale strap, l.h.
	56-73731FA3	Scale strap, r.h.

Philco 50-1720

This model is electrically similar to Model 50-1725. It is housed in a different style of cabinet and employs an M-20 record changer.

The following schematic changes have been made. The connection from C421 now goes to R409, which goes to the junction of R410 and C422, instead of to R306. L410 has been inserted from the junction of C306 and C422 to the junction of C330 and C309. The value of R403 has been changed from 10,000 ohms to 22,000 ohms. Capacitor C320 has been added from ground to the junction of C306, R300, and tap 4 of Z300. Capacitor C329 is now located from ground to the junction of tap 2 of Z303 and pin 7 of the 6BJ6 2nd i-f amplifier, instead of from B— to ground. Capacitor C331 is now connected from the junction of C332 and C327 to ground, instead of across C333. Capacitor C320 has been deleted. It was connected from ground to the junction of C321 and R312. Capacitor C210 has been inserted from the junction of pin 7 of the 1st audio amplifier, ½ 19T8, to ground. The value of R201 has been changed from 47,000 ohms to 33,000 ohms. Capacitor C105 has been inserted from ground to the junction of L100 and pin 5 of the 19T8. Coils L402, L403, L405, and L408 are ¼ μh.

The accompanying diagram shows the hookup for the record changer, Model M-20.

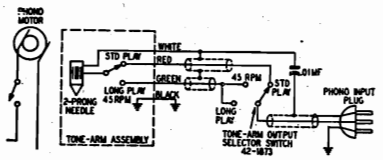

Hookup for Record Changer, Philco Model M-20, in Philco Model 50-1720.

In Run #2, Capacitor C330 has been removed to improve f-m discriminator performance.

The replacement parts list for Model 50-1725 applies to Model 50-1720, except for the differences indicated below:

Ref. No.	*Part No.*	*Description*
C105	62-110009001	Capacitor, filament bypass, 100 μμf
CR100	34-8003-2	Rectifier, selenium, dry-disk, 150 ma
CR101	34-8003-2	Rectifier, selenium, dry-disk, 150 ma
R100	33-1335-84	Resistor, current limiting, 50 ohms
R101	33-3435-23	Resistor, 2-section filter
C210	62-122001001	Capacitor, cathode bypass, 220 μμf
LS200	36-1610-4	Loudspeaker
R201	66-3338340	Resistor, bass compensation, 33,000 ohms
T200	32-8367-1	Transformer, audio output
C320	62-110009001	Capacitor, plate decoupling bypass (f-m) 100 μμf (rewired)
C329	62-110009001	Capacitor, r-f bypass, 100 μμf (rewired)
C333	62-110009001	Capacitor, r-f bypass, 100 μμf
Z300	32-4257A	Transformer, f-m 1st i-f
Z301	32-4258A	Transformer, a-m 1st i-f
Z302	32-4372-1A	Transformer, f-m 2nd i-f
Z303	32-4160-3A	Transformer, a-m 2nd i-f
Z305	32-4240-2A	Transformer, a-m 3rd i-f
C400	31-2724-7	Capacitor, tuning gang (f-m, 3-section; a-m, 2-section)
L410	32-4143-4	Coil, B— r-f isolating choke, 100 μh
LA400	76-3583-13	Loop aerial
	10762	Cabinet
	54-7846	Back
	1W25345FE11	Screw, back mtg. (12 required)
	219-179	Baffle, wood, speaker
	40-7715	Baffle-and-cloth ass'y
	56-5855	Bezel
	54-5021	Dial scale
	56-2234-3	Scale strap (2 required)
	45-6564	Drop door
	27-4610	Grommet, control shaft, light shield (4 required)
	45-6565	Instrument panel
	27-6233-39	Socket ass'y, pilot lamp

©John F. Rider

Compliments of www.nucow.com

Philco M-12C

This model appears on *pages RCD. CH. 19-55 through RCD. CH. 19-74 of Rider's Manual Volume XIX.* The three parts referred to below were listed twice in the parts list, and should be deleted as indicated.

Part No.	*Description*	
56-4647	Retainer spring	Delete
56-5753	Push-off saddle	Delete
76-4008	Base plate assembly	Delete.

RCA QU-62, Ch. RC-602B

This model appears on *pages 17-12 through 17-20 of Rider's Manual Volume XVII.* Capacitor C12 has been changed from 39 $\mu\mu$f to 33 $\mu\mu$f. Delete 70934, Capacitor, ceramic, 39 $\mu\mu$f, and add 73247, Capacitor, ceramic, 33 $\mu\mu$f (C12) to the replacement parts list.

RCA RP-168 Series

The RP-168 Record Changer Series is used in the following instrument models:

Record Player Attachments 9JY, CP-5203, 45J, QJY

Record Players (without radio) 9EY3, 9EY31, 9EY32, 9EY35, 9EY36, 45EY, QEY3

Radio-Phonograph Combinations 9QV5, 9W51, 9W78, 9W101, 9W102, 9W103, 9W105, 9W106, 9Y7, 9Y51, A55, A78, A106.

Radio-Phonograph-Television Combinations 9TW309, 9TW333, 9TW390, TA128, TA129, TR126, S1000

Detailed drawings (see Fig. 1) and descriptions for the pickup arm assemblies are given below:

SUB-BASE ASSEMBLIES

Type I—Sub-base Stock No. 74070. Has staked studs for spring anchors and one-piece reject lever. Stamped or labelled RP168-1 or RP168-3.

Type II—Same as Type I, except it uses a two-piece reject lever. Use Stock No. 74743 Sub-base (Type III) for replacement.

Type III—Sub-base Stock No. 74743. Same as Type II, except that it has pickup-arm rest on sub-base (when motor-board rest is used, the sub-base rest is to be deformed).

Type IV—Sub-base Stock No. 74468. It uses an a-c input connector and audio output jack mounted on a separate bracket. Labelled RP168-2 and used only with Model CP-5203.

Type V—Sub-base Stock No. 74856. Has turned up lances for spring anchors. Idler wheel mounting plate (45B, Stock No. 74814) is removable. It is labelled RP168-1, RP168B-1, etc. It has pickup-arm rest on sub-base (when motorboard rest is used, the sub-base rest is to be deformed).

NOTE:—Two different main levers (director lever) are used, depending upon which turntable assembly is used. Lever (41), Stock No. 74076 has a long end (41C) and is used with Turntables Types I and II. Lever (41), Stock No. 74857 has a short end and is used with Turntable Type III.

Type VI—Stock No. 74803. Similar to Type V, but it does not bear any "RP168" identification. It has pickup-arm rest on sub-base. Idler wheel mounting plate (45B) is secured to the sub-base with a shoulder rivet.

Type VII—Same as Type VI, except it does not have pickup-arm rest on sub-base. Use Stock No. 74803 (Type VI) for replacement (the pickup-arm rest is to be deformed).

NOTE: Type VI and VII—Late production of these types have the idler wheel mounting stud (22) staked to its mounting plate. The idler wheel retainer (horeshoe washer) is Stock No. 75081.

PICKUP-ARM ASSEMBLIES (LESS PICKUP)

Type I—Arm Stock No. 74041. Stamped 970488. Pickup-arm stud (9A) is full diameter for entire length (do not use where pickup-arm rest is on sub-base). Lead counterbalance is riveted to arm. Arm Stock No. 74443. For Model CP-5203 only. Black finish, otherwise similar to No. 74041.

Type II—Arm Stock No. 74824. Same as No. 74041 except that stud (9A) has a flat on one side at bottom end. Can be used with either type of pickup rest. Arm Stock No. 75058. For Model 45EY only. Two-tone finish, otherwise same as No. 74824.

Type III—Arm Stock No. 75073. Stamped 3R1. Similar to No. 74824 except that a different pivot (9B) is used and the lead counter-balance is fastened to the arm with a screw. Stud (9A) is of smaller diameter at bottom end. Can be used with either type of pickup rest. Use only with No. 74059 pivot arm.

Type IV—Same as Type III except that stud (9A) is of full diameter for entire length. Use No. 75073 for replacement.

Type V—Arm Stock No. 74796. Stamped 3R1. Similar to Type III except that a different pivot (9B) is used and the lead counter-balance is not used. A 5/8" o.d. counter-balance spring is used. Can be used with either type of pickup rest. Use only with No. 74799 pivot arm.

Type VI—Same as Type V except that stud (9A) is of full diameter for entire length. Use No. 74796 for replacement.

When replacing a stylus, never bend the stylus support wire with crystal pickups (Stock Nos. 74067 and 74625) remove the two screws holding sapphire guard in place and remove the guard. Remove the small nut and washer on the threaded shaft of the sapphire holder and gently push the shaft through the hole in the armature shaft until the sapphire holder assembly comes free. Extreme care should be used when loosening the nut so that the twisting motion does not break the crystal. Take hold of the lower end of the shaft with a pair of pliers while loosening or tightening the nut, being very careful so as not to strip the threads or break the crystal. Insert threaded shaft of replacement sapphire holder through armature shaft and replace the washer and nut. Make sure that the sapphire is in the correct position. Replace the sapphire guard, positioning it by means of the oversize screw slots. Make certain that the sapphire and its supporting wire are centered in the guard. Tighten the guard screws. Before using, check to see that the sapphire projects far enough beyond the guard so that the guard will not touch the record. If necessary, bend the guard a little.

When using a variable reluctance pickup (Stock No. 74466) to remove the stylus assembly, insert a bent paper clip or equivalent tool into the stylus stud pin socket (see Fig. 2). Press the assembly out from the cartridge with the tool as shown by the arrow in the illustration. To replace the stylus assembly, insert the stud pin into the recess, with the locating tab positioned above the locating slot between the two pole pieces. Press assembly in firmly by applying pressure upon the stud pin with a blunt tool. Care must be taken to press assembly only at this point so as not to damage or distort the stylus arm.

When using a ceramic pickup (Stock No. 74984) to remove the stylus insert the point of a knife blade between the stylus wire and the case. The stylus may be pried out of its rubber mounting with a twisting motion of the knife blade. To replace stylus, push end of stylus wire down into its rubber mounting. Be certain that the stylus is centered in the groove of the pickup case.

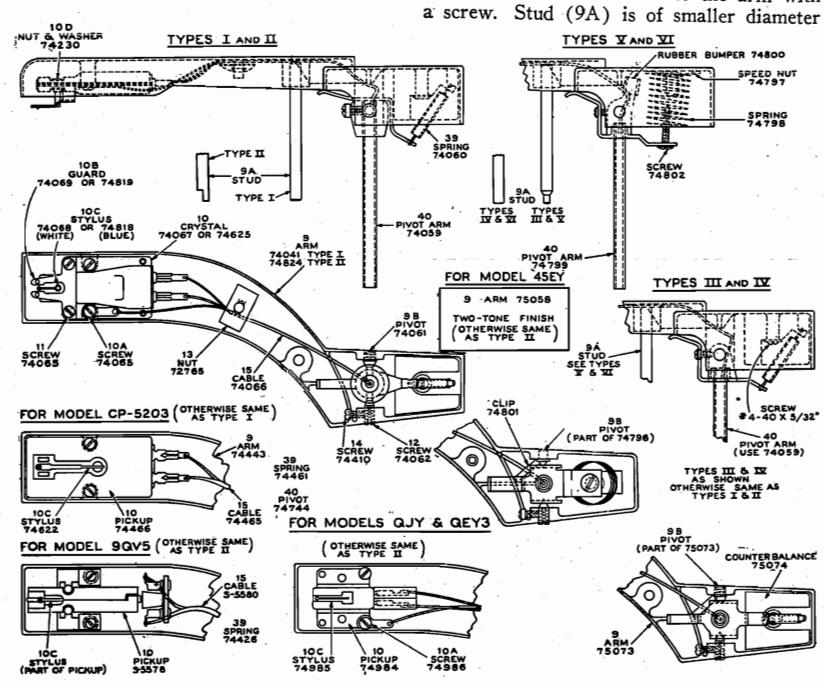

Fig. 1 PICKUP ARM ASSEMBLIES

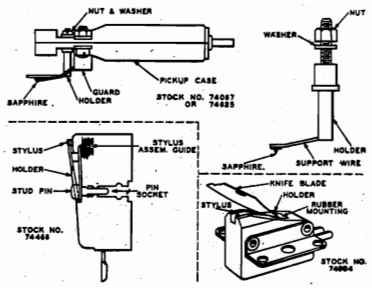

Fig. 2 STYLUS REPLACEMENT

©John F. Rider

Compliments of www.nucow.com

RCA RP168 Series

The RP168 Series record changer appears on *pages RCD. CH. 19-1 through 19-8 of Rider's Manual Volume XIX.* The RP168-2 differs from the RP168-1 essentially in that it uses a capacitor-type motor. It also has a power input receptacle and audio output jack mounted on the base sub-assembly. The RP168-3 is identical to the RP168-1 except for the use of a motor which will operate satisfactorily on a 50-cycle power supply. For conversion to 50-cycle operation, a spring sleeve is added to the motor spindle shaft.

The changes in the replacement parts list for the RP168 Series are as follows:

Stock No.	Ill. No.	
		RP168-1
74620	1	Nose—spindle nose (late type—thick wall)
74427	46	Spring—reject lever spring (0.203" O.D. x 0.531"—13 turns) (late type, 2 required)
74426	59	Spring—trip lever spring (0.171" O.D. x 0.595"—30 turns)
74453	....	Washer—bearing washer between trip pawl (Ill. No. 37) and trip pawl lever (Ill. No. 66)
		RP168-2
74472	1	Nose—spindle nose
74445	8	Turntable—turntable and mat—less spindle nose and separator assemblies
74471	8A	Mat—turntable mat
74470	24	Wheel—idler wheel
74468	45	Base—sub-base assembly complete with all staked and riveted parts including idler lever and reject lever
74469	73	Motor—105/125 volts, 60-cycle capacitor type motor complete with connector and 5-μf capacitor
74621	....	Capacitor—motor capacitor—5μf
74473	....	Bracket-metal bracket with power input connector and audio output jack
		RP168-3
74624	73	Motor—105/125 volts, 60-cycle motor (stamped 941072-1) complete with connector and RCA 73158 spring sleeve (for 50-cycle conversion)
73158	....	Spring—spring sleeve to convert 941072-1 motor to 50-cycle operation
		RP168A-1
74209	75	Cover—mounting screw cover (threaded type) (3 required) use with 74424 screw
74581	75	Cover—mounting screw cover (plug-in type) (3 required) use with 74582 screw
74424	76	Screw—No. 8-32 x 1 ¾" special screw (with tapped hole) for mounting record changer (3 required) use with 74209 cover
74582	76	Screw—No. 8-32 x 1 ¾" special screw (non-tapped hole) for mounting record changer (3 required) use 74581 cover
74422	78	Spring—conical spring for mounting record changer—upper—L.H. side (2 required)
74423	79	Spring—conical spring for mounting record changer—bottom (3 required)
74208	80	Nut—tee nut for mounting record changer (3 required)
74184	81	Motorboard—motorboard complete with welded brackets and stud—less rest and operating parts
74421	84	Spring—conical spring for mounting record changer—upper—R.H. side (1 required)

The replacement parts listed above are for the specific models mentioned, other parts not listed are identical with those listed for RP168-1 in *Rider's Manual Volume XIX.*

RP168-2

This changer uses RP168-2 mechanism and RMP130-1 pickup and arm assembly

74467	83	Knob—reject control knob
74444	81	Motorboard—motorboard complete with welded brackets and stud—less rest and operating parts
74446	82	Rest—pickup arm rest
74474	....	Switch—ON-OFF switch.

RCA 8BX5, 8BX54, 8BX55, Ch. RC-1059, RC-1059A

These models appear on *pages 19-5 through 19-9 of Rider's Manual Volume XIX.* It has been found that the values of the resistor (10,000 ohms) and the capacitor (0.01 μf), specified to be used for i-f alignment, result in misalignment (1 to 1.5 kc) of the 1st i-f primary. For more accurate alignment, it is suggested that a 1,000-ohm resistor and a 39-μμf capacitor be used during i-f alignment.

RCA 8V91

This model appears on *pages 19-16 through 19-25 of Rider's Manual Volume XIX.* The following changes in parts list have been made:

Change:
73753 Pull—
to read:
73753 Pull—Door pull (2 required) for mahogany instruments.
Add:
74626 Pull—Door pull (2 required) for blonde instruments.

RCA 8X541, 8X542, 8X545, 8X546, 8X547, Ch. RC-1065C, RC-1065D, RC-1065F, RC-1065H, RC-1065J, RC-1065K

Chassis RC-1065C and RC-1065D are the same as Chassis RC-1065 and RC-1065A except that they have oscillator coils (stock no. 74448) and tuning capacitor (stock no. 74447) stamped 941274-2.

Chassis RC-1065F and RC-1065H are the same as Chassis RC-1065C and RC-1065D except that they use a 50B5 output tube.

Chassis RC-1065J and RC-1065K are similar to Chassis RC-1065C and RC-1065D except that they use stock number 75846 1st i-f transformer (stamped 970441-11), number 75847 2nd i-f transformer (stamped 970441-12) and number 71168 1-megohm volume control (stamped 970776-4).

When excessive hum is encountered in these chassis, the value of R15 should be checked. The correct value of this resistor is 1,200 ohms. In same chassis, two 1½-watt resistors (one each of 2,200 ohms and 2,700 ohms) are connected in parallel and used as a substitute for the 1,200-ohm, 1-watt resistor R15.

RCA 8X71, 8X72, Ch. RC-1070

These models appear on *pages 19-30 through 19-34 of Rider's Manual Volume XIX.* The driver tube (12AU6) cathode resistor, R11, has been changed from 180 ohms to 330 ohms.

RCA 8X541, Ch. RC-1065F, 8X542, 8X547, Ch. RC-1065H

These instruments are similar to Models 8X541, 8X542, 8X547 which appear on *pages 18-45 through 18-46 of Rider's Manual Volume XVIII,* except that an RCA 50B5 tube is used in the output stage. The tuning capacitor and oscillator coil used are those described for the second production of the above models.

Chassis RC-1065 is used in Models 8X541, 8X544, and 8X545. Chassis RC-1065A in used in Models 8X542, 8X546, and 8X547. Chassis RC-1065B is used in Models 8X541, 8X544, 8X545 2nd production. Chassis RC-1065C is used in Models 8X542, 8X546, 8X547 2nd production.

The addition to parts list and the output tube circuit appear below:

74822 Socket—tube socket, miniature for 50B5 tube.

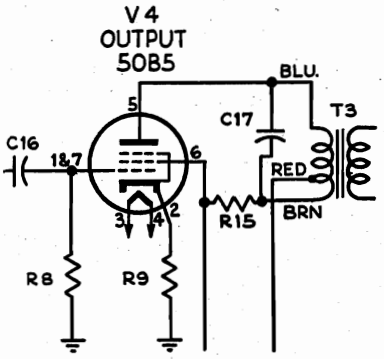

Output tube circuit for RCA chassis RC-1065F and RC-1065H.

RCA 9W101, 9W103, 9W105

These models appear on *pages 19-35 through 19-44 of Rider's Manual Volume XIX.* The original mounting screws used a cover which screwed into the top of the mounting screw. The screws now being used have a plug-in type of cover. This applies to the RCA 9Y7 also. The change in parts list is as follows:

74209 Cover—mounting screw cover (threaded type) for RP168A-1 record changer (3 required) (used with RCA 74424 screw)

74424 Screw—8-32 x 1 ¾" special screw (tapped hole) for RP168A-1 record changer (3 required) (used with RCA 74209 cover)

74581 Cover—mounting screw cover (plug-in type) for RP168A-1 record changer (3 required) (used with RCA 74582 screw)

74582 Screw—8-32 x 1 ¾" special screw (nontapped hole) for RP168A-1 record changer (3 required) (used with RCA 74581 cover).

RCA 9W101, 9W103, Ch. RC-618B

These models appear on *pages 19-35 through 19-44 of Rider's Manual Volume XIX.* In some chassis i-f transformers stamped 970435-2 have been used as a substitute for 2nd i-f transformers stamped 970435-5.

The 455-kc windings of 970435-2 transformers use resonating capacitors of 235 μμf each; the d-c resistance of each winding is 8.2 ohms. The transformer indicated in the schematic diagram is stamped 970435-5.

The addition to parts list is as follows:

74579 Bumper, rubber bumper (black) for front panel of record changer drawer, walnut or mahogany instruments, Models 9W101 and 9W103 (2 required)

74580 Bumper, rubber bumper (white) for front panel of record changer drawer, blonde or limed-oak instruments, Models 9W101 and 9W103 (2 required).

RCA 9Y7, Ch. RC-1057B

This model appears on *pages 20-21 through 20-23 of Rider's Manual Volume XX.* A 100-ohm, ½-watt resistor, R24, has been added in series with the oscillator coupling capacitor C23, between the capacitor C23 and the oscillator coil L3. This reduces noise caused by parasitics in the oscillator. Add to the replacement parts list: Resistor, fixed composition, 100 ohms, ± 20%, ½ watt, R24.

©John F. Rider

Compliments of www.nucow.com

RCA 54B6, Ch. RC-589UE

This model is similar to Model 54B1, 2nd Production, which appears on *changes pages C18-8 and C18-9 of Rider's Manual Volume XVIII,* and on *pages 15-22 through 15-24 of Rider's Manual Volume XV,* with the exception of the parts listed below:

Part No.	*Description*
73284	Fastener, push fastener to hold loop, chrome (2 required)
73281	Hinge, lid hinge, ivory
73276	Lid, case lid complete with loop support less loop, ivory
73282	Loop, antenna loop complete with connectors less lid, ivory
73280	Plate, backing plate for mounting hinge on lid, chrome
73279	Screw, case cover mounting screw, 1 set, ivory
73286	Bottom, case bottom, ivory
73277	Center, case center, gold
73287	Handle, carrying handle, tan
73288	Link, handle link.

RCA 75ZU 2nd Prod., Ch. RC-1063B

This model is the same as 75ZU, Ch. RC-1063A, which appears on *pages 19-45 and 19-46 of Rider's Manual Volume XIX,* except for the following changes:

Different i-f transformers are used, as shown in the accompanying diagram. Resistor R15 has been added to the cathode circuit of the 12SK7 i-f amplifier, and R14, in the diode circuit of the 12SQ7 2nd detector, has been deleted. Changes that apply to both the RC-1063A and RC-1063B chassis are given in the change notice for 75ZU, RC-1063A, that appears on *changes page C20-10 of Rider's Manual Volume XX.*

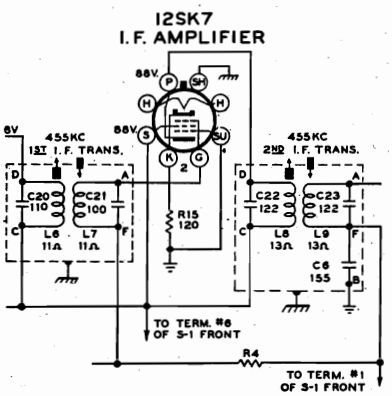

Changes for RCA 75ZU, RC-1063B.

The replacement parts list is the same as that for RC-1063A except for the differences listed below:

Part No.	*Description*
70128	Transformer, first i-f transformer, stamped 922246-11 (L6, L7, C20, C21)
70129	Transformer, second i-f transformer stamped 922246-12 (L8, L9, C6, C22, C23)
	Resistor, fixed composition, 120 ohms, ± 10% (R15).

RCA 77V2, Ch. RC-606C

This model appears on *pages 19-29 through 19-53 of Rider's Manual Volume XIX.* The top-view diagram of the chassis layout that appears on *page 19-52* illustrates tube V5 as 6K6GT. Tube V5 should be a 6V6GT.

Radio Wire JS-168

Model JS-168 is the same as Model JS-174 which appears on *page 19-17 of Rider's Manual Volume XIX.*

Radio Wire JS-175

Model JS-175 is the same as Models JS-173, JS-184, and JS-185 which appear on *page 19-16 of Rider's Manual Volume XIX.*

Regal 1107, 7254

Models 7254 and the revised 1107 are the same as Model 1107 which appears on *page 19-8 of Rider's Manual Volume XIX* with the following changes:

Antenna loop, 30-128, has been changed to an antenna coil, 30-145.

Ganged variable capacitors 40-101 have been changed to 40-101G.

The value of the 13,000-ohm resistor connected to the B lead of 30-127 has been changed to 15,000 ohms and is designated as 65-155.

The 200,000-ohm resistor, 65-142 has been changed to 220,000 ohms and is designated as 65-108.

The 0.01-μf capacitor connected to the A lead of 30-127 has been changed to 0.006 μf and is designated as 50-101.

Resistor 20-101 is now 20-103, the value remains the same.

Capacitor 53-103 is now 55-103, the value remains the same.

The 25-ohm, ½-watt resistor, 65-101 has been changed to 22 ohms, ½ watt, and is designated as 65-160.

The two 50-μf capacitors, 60-106, have been changed to 40 μf and are designated as 60-108.

The 2,400-ohm resistor, 65-132, has been changed to 2,200 ohms and is designated as 65-162.

Sears 101.206-1, 101.206-2, and 101.206-3

These automatic record changers are similar to Chassis 101.206 which appears on *pages RCD. CH. 18-6 through RCD. CH. 18-9 of Rider's Manual Volume XVIII,* with the following exceptions. Chassis 101.206-1 has a revised pickup-arm hub which permits manual movement of the pickup arm while the changer is in automatic cycle. The cam seat for the pickup arm permits return of the arm to the correct position after manual dislocation, without readjustment of the 10" or 12" drop points. This chassis incorporates a "Manual-Automatic" switch.

Chassis 101.206-2 is the same as the 101.206-1 except that it does not have the "Manual-Automatic" switch. Chassis 101.206-3 is the same as the 101.206-2 except that the phono-pickup lead has cotton overbraid for insulation from the chassis.

Sears 6686A, Ch. 139.151-1

This chassis is similar to Chassis 139.151 which appears on *page 17-1 of Rider's Manual Volume XVII,* except that an "ON-OFF" switch is used in the line cord. The parts list for this chassis is the same as that for the 139.151 except for the following change:

Ref. No.	*Part No.*	*Description*
H	J20667	Line cord, switch and plug.

Sears 101.211-4

This model appears in the *Record Changer Section of Rider's Manual Volume XIX on pages RCD. CH. 19-1 through 19-14.* Chassis 101.211-4 is basically the same as the 101.211-1; however, the 101.211-4 incorporates a revised spindle assembly, turntable and hinge body assembly The change in parts list is as follows:

Location Number	*Part Number*	*Description*
5	R57943	Turntable assembly
12	R49953	Hinge pin
14	R57945	Hinge body assembly
15	R57710	Adjusting screw
20	R65101	Cartridge-syntronic pickup (grounded)
21	R66691	Arm-pickup (less cartridge)
68	R62360	Motor assembly, 110-volt, 50-cycle (Alliance)
70	R57902	Spindle assembly
70	R57934	Spindle shaft and base assembly
71	R57940	Record pusher
73	R57903	Pusher spring
76	R57051	Turntable bearing
81	R57768	Spring-pusher shaft
105	R49958	Spring-counterbalance

Location number 83 through 88 and number 103 have been deleted.

The 456.211-5 Record Changer is basically the same as the 101.211-1, except that the 456.211-5 incorporates a bottom pan assembly, R66692, and a revised spindle assembly, turntable and hinge body assembly. The syntronic pickup arm and grounded syntronic cartridge replace the old style plastic arm.

Sears 8005, Ch. 132.839-1

This chassis is similar to Chassis 132.839 which appears on *pages 17-8 through 17-10 of Rider's Manual Volume XVII,* except for the following changes. The filament connections have been reversed on the 50L6 tube socket to prevent burning of resistor R11 and damage to the tube. R12, a 1,200-ohm, 1-watt resistor has been added to the B+ circuit between T3 and C10B. The filter choke L3 has been deleted. The parts list for this chassis is the same as that for the 132.839 except for the following changes:

Ref. No.	*Part No.*	*Description*
R12		Resistor, 1,200 ohms, 1 w
T3	N21921	Transformer, output
Spk	N21922	Speaker, 4", p-m.

Sears 8210, Ch. 101.820-1A

This chassis is similar to Chassis 101.820 which appears on *pages 17-4, 17-5, and 17-15 of Rider's Manual Volume XVII,* except for the changes in the parts list. The parts list for this chassis is the same as that for the 101.820 except for the following changes:

Ref. No.	*Part No.*	*Description*
R10	R62705	Control, On-Off & volume
R15		Resistor, 680 ohms, ½ w
R14		Resistor, 820 ohms, ½ w
T3	R62721	Transformer, output
	R62717	Speaker, 5¼" p-m
	R63190	Cone, voice coil
	R57272	Plug, 1 prong.

Sears 9073A, Ch. 135.244; 9073B, Ch. 135.244-1

These models are similar to Model 9073, Ch. 135.244, which appears on *pages 20-70 through 20-72 of Rider's Manual Volume XX.* Models 9073A and 9073B use a three-speed manual record player, part no. F-7625 and the number F-296 cabinet.

Chassis 135.244-1 is the same as 135.244 except that a protective resistor, R12, has been added to the rectifier circuit, from pin 8 to the junction of C18 and C16.

The change in parts lists is as follows:

Ref. No.	*Part No.*	*Description*
R12	F-4022	Resistor, 33 ohms, ½ w, 20% (in 132.244-1 only)
	F-7625	Motor, phono, 60-cycle (less turntable) (speed indicator arm is in center of rear plate of motor)
	F-7626	Idler wheel
	F-7627	Turntable, 8"
	F-296	Cabinet, radio, molded.

© John F. Rider

Compliments of www.nucow.com

Sears 101.666-1B

This chassis appears on *page 19-15 of Rider's Manual Volume XIX*. The d-c resistances of the r-f coils (L1 and L3), are 9.6 ohms.

Sears 9073C, Ch. 135.244-1

Model 9073C uses chassis 135.244-1 and is the same as Model 9073B except for the following differences. Capacitor C20 has been deleted from the circuit. The value of resistor R6 has been changed to 1.5 megohms. The value of volume control resistor R6 has been changed to 500,000 ohms. The values of capacitors C12 and C14 have been changed to 0.0001μf and 0.0005μf, respectively. Resistor R13, 2.2 megohms, has been added across the pickup socket. The change in the parts list is as follows:

Ref. No.	*Part No.*	*Description*
	F-7881	Arm, pickup (less crystal)
	F-7882	Cartridge, crystal, Shure Bros. P37C
	F-7883	Needle, phono, unipoint, sapphire
	F-7563	Capacitor, variable assembly
C12	F-6015	Capacitor, ceramic, 0.0001 μf 500 V
C14	F-4890	Capacitor, 0.0005 μf 600 V
R6	F-6239	Control, On-Off and Volume
R5	F-3450	Resistor, 1.5 megohm, ½ w, 20%
R13	F-4277	Resistor, 1,000 ohm, 1.0 w. 10%.

Sears 9005, 9006, Ch. 132.858

These models appear on *pages 20-65 and 20-66 of Rider's Manual Volume XX*. The following changes have been made in the replacement parts list:

Ref. No.	*Part No.*	*Description*
	N22166	Scale, dial, clear plastic
R4		Resistor, 2.2 megohms, ¼ w
R5	N22192	Resistor, volume control & on-off switch, 1 megohm
R6		Resistor, 15 megohms, ¼ w
R7		Resistor, 22 ohms, ¼ w
R8, R9		Resistor, 470,000 ohms, ¼ w
R10		Resistor, 150 ohms, ¼ w
R11		Resistor, 1,200 ohms, 1 w.

Sears 9270, Ch. 547.245

This model appears on *pages 20-73 through 20-75 of Rider's Manual Volume XX*. The parts number of "Bearing, tuning shaft," should be changed from V3449 to V9160. A 50-μf capacitor, C28, has been added to the filament network from the junction of pin 7 of the 1U5 and pin 1 of the 1U4, i.f., to the B— line. The following part should be added to the replacement parts list: C28, V4636, Capacitor, electrolytic, 50 μf, 25 v.

Stewart-Warner A92CR3S, Code 9028-CS, A92CR6S, Code 9028-FS

These models are similar to Models A92CR3, Code 9028-C, and A92CR6, Code 9028-F, which appear on *pages 17-11,12 through 17-21 of Rider's Manual Volume XVII*, except for the following differences. The "S" chassis is designed to provide greater sensitivity so as to accommodate the requirements of satisfactory performance in low signal strength areas. Due to certain design differences in these models it is desirable to set the band switch to the FM position whenever the record changer is used.

The high side of loop antenna no. 2 is connected to terminal R of antenna coil no. 18 as shown in Fig. 1. This loop is used only for a-m push-button operation. Band-switch section 3A is not used in the "S" chassis. One side of loop antenna no. 134 is connected to terminal L of antenna coil no. 15 through the 0.01-μf capacitor, no. 136. The other side of the antenna is grounded. This loop is used only for a-m operation. The brown lead from the external antenna is routed to terminal L of

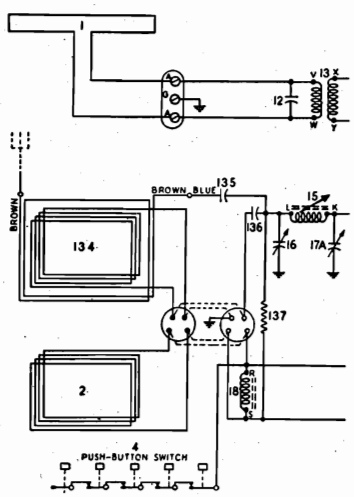

Fig. 1. Circuit changes for Stewart-Warner A92CR3S and A92CR6S.

antenna coil no. 15 through the 100-μμf capacitor no. 135. Terminal L of antenna coil no. 15 is connected to avc through the 680,000-ohm resistor no. 137. The high side of the wave trap consisting of coil no. 39 and capacitor no. 38 is connected to terminal S10 of band-switch section 3C. Resistor no. 69 is deleted and the cathode of the 6BA6 1st i-f tube is grounded. The cathode of the 6SJ7 tube is connected to ground through the 1,000-ohm resistor no. 139, instead of through the 1,500-ohm resistor no. 103. One side of the voice coil of the speaker is connected to the screen of the 6SJ7 tube through a 470-ohm resistor no. 140 and a 0.25-μf capacitor no. 108. The junction point between capacitor no. 108 and resistor no. 140 is connected to terminal S29 of band-switch section 3B. Terminals S30 and S31 are connected to the junction of resistor nos. 128 and 129. The change in section 3 band switch, front view, is shown in Fig. 2.

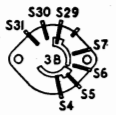

Fig. 2. Section 3, front view, band switch for Stewart-Warner A92CR3S and A92CR6S.

The additional parts used in the "S" type chassis are given below. Other parts are the same as those for the A92CR3 and A92CR6.

Ref. No.	*Part No.*	*Description*
91	502261	Capacitor, 0.01 μf, 600 v
	504725	Capacitor, 0.02 μf, 200 v (used only on chassis with "H" designation)
134	505668	Loop antenna for a.m. (29" x 30 ⅜")
135	502931	Capacitor, mica 100 μμf, 500 v
136	502261	Capacitor, 0.01 μf, 600 v
137	502267	Resistor, carbon, 680,000 ohms, ¼ w
138	502406	Resistor, carbon, 1,500 ohms, ¼ w
139	502478	Resistor, carbon, 1,000 ohms, ¼ w
140	502126	Resistor, carbon, 470 ohms, ¼ w.

Stewart-Warner B92CR Series

These models are similar to Models B92CR1,2,3,4,8,9, and 10 which appear on *pages 19-8 through 19-14 of Rider's Manual Volume XIX*. The following revisions apply to the B92CR Series. Capacitor no. 103 has been changed from 0.01 μf to 0.001 μf. The high side of the capacitor was formerly connected to the grid, pin 5, of the 6V6GT output tube. It is now connected to the grid of the 6SQ7, 1st a-f tube. These changes were made to eliminate low-frequency distortion, and are incorporated in chassis stamped with the letter "S" or "H".

The list of models in the B92CR Series and their code numbers is as follows:

Radio Model No.	*Radio Code No.*	*Radio Model No.*	*Radio Code No.*
B92CR1	9043-A	B92CR8	9043-K
B92CR1LP	9043-ALPW	B92CR9	9043-L
B92CR2	9043-B	B92CR10	9043-M
B92CR2LP	9043-BLP	B92CR12	9043-GR
B92CR2LPX	9043-BLPX	B92CR12LP	9043-GRLP
B92CR2X	9043-BX	B92CR13	9043-GL
B92CR3	9043-C	B92CR13LP	9043-GLLP
B92CR3LP	9043-CLP	B92CR14	9043-GM
B92CR3LPX	9043-CLPX	B92CR14LP	9043-GMLP
B92CR3X	9043-CX	B92CR15	9043-GT
B92CR4	9043-D	B92CR15LP	9043-GTLP
B92CR4LP	9043-DLP	B92CR18	9043-GH
B92CR4LPX	9043-DLPX	B92CR18LP	9043-GHLP
B92CR4X	9043-DX	B92CR19	9043-HM
B92CR5	9043-E	B92CR19LP	9043-HMLP.

Change in parts list is as follows:

Ref. No.	*Part No.*	*Description*
118	505342	Speaker, p-m dynamic (8 inch) used on all models
119	506328	Speaker, p-m, dynamic (8 inch) used on all models except B92CR19 and B92CR19LP
119	506657	Speaker, p-m dynamic (6 inch) used only on models B92CR19 and B92CR19LP.

United Motors R-1253, R-1254, R-1255

Models R-1253 and R-1254 are found on *pages 18-11 through 18-19 of Rider's Manual Volume XVIII*. Model R-1255 is similar to these. The circuit changes for these models are shown in the accompanying diagram. The changes in the parts list are as follows:

Illus. No.	*Production Part No.*	*Service Part No.*	*Description*
C67	CM20A470M	G470	47 μμf, 500 v, ceramic
C68	CM20A102M	G102	1,000 μμf, 500 v, mica
R43	RC40AE473K	C473	47,000 ohms, 2 w, carbon
R45, 47	RC20AE392K	A392	3,900 ohms, ½ w, carbon
R57	RC30AE068K	B068	6.8 ohms, 1 w, carbon
R58	RC20AE562K	A562	5,600 ohms, ½ w, carbon
R59	RC20AE154M	A154	150,000 ohms, ½ w, carbon
SW3	60B265	1218695	Switch, power and tone (bass)
SW4	60B325	1218697	Switch, tone control (treble).

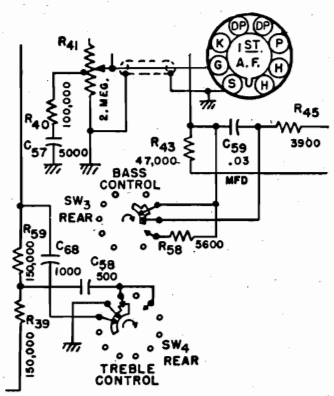

Circuit changes for United Motors R-1253, R-1254, and R-1255.

©John F. Rider

Compliments of www.nucow.com

Templetone G418, G4108

Model G418 appears on *page 17-1 of Rider's Manual Volume XVII.* The value of resistor R5 has been changed to 10 megohms. Model G4108 is the same as G418.

Templetone H-727

Model H-727 is similar to model G-725 which appears on *pages 17-3 through 17-6 of Rider's Manual Volume XVII.*

United Motors R-705

This model appears on *pages 17-1 through 17-6 of Rider's Manual Volume XVII.* This receiver may be installed in the 1949 Chevrolet by using speaker and control mounting parts in adapter package No. 4415. Speaker installation instructions noted under "Pontiac" are used for mounting the speaker to the instrument panel.

United Motors 7258155

This model appears on *pages 19-76 through 19-80 of Rider's Manual Volume XIX.* The following changes have been made in the parts list after serial 5596000:

Illus. No.	*Production Part No.*	*Service Part No.*	*Description*
6	1219508	1219508	1st i-f assy. (miniature)
7	1219509	1219509	2nd i-f assy (miniature)
26	7240724	M908	Electrolytic
26A			20 μf, 25 v
26B			20 μf, 400 v
26C			20 μf, 400 v

United Motors 984249

Model 984249, Pontiac, appears on *pages 19-65 through 19-70 of Rider's Manual Volume XIX.* The 330-ohm, ½-watt, i-f cathode resistor, No. 54, has been replaced by a 390-ohm, ½-watt resistor on the late production sets. It has been found that the tendency to motor boat is caused by a 6SK7 tube with a much higher than average contact potential. A slightly higher bias on the i-f tube corrects this tendency, and the slightly higher value of cathode resistor accomplishes this.

United Motors 984296

Model 984296, Pontiac, appears on *pages 19-60 through 19-64 of Rider's Manual Volume XIX.* The following change has been made in all sets above serial number 691137 and B39-54401:

Illus. No.	*Production Part No.*	*Service Part No.*	*Description*
43	1213220	A 151	150 ohms, ½ w, insulated.

United Motors 986240, Chevrolet

This model appears on *pages 20-48 through 20-58 of Rider's Manual Volume XX.* The following changes are effective on only those sets above serial no. C49-0401050. The voltage at the grid of the r-f amplifier, 6BA6, is now 0 v, and that at the grid of the i-f amplifier, 6BA6, is now 0.3 v. The voltage at the first diode plate of the 6AV6 is —0.3 v. Capacitor 30, choke 8, and transformer 51A have been added, replacing section 51. Capacitor 23 has been deleted. The following changes should be made to the replacement parts list:

Ref. No.	*Prod. Part No.*	*Service Part No.*	*Description*
		Delete:	
23	1217848	1217848	Capacitor, chassis plate
51	7255881	7255881	Transformer, power (potted)
		Add:	
8	7258743	7258743	Choke
30	7257879	E-504	Capacitor, 0.5 μf, 100 v. tubular
51A	7258747	7258747	Transformer, power (unpotted)

Westinghouse H-190, H-191, H-191A H-220, Ch. V-2134

Model H-220 is similar to Models H-190, H-191, H-191A, Ch. V-2134 which appear on *pages 19-20 through 19-23 of Rider's Manual Volume XIX.* Model H-220 and late production of Model H-190 are identical, except that different record changers are used. In later production of Models H-190 and H-191 several changes were made. These changes, which are incorporated in all Model H-220 receivers, consist of a different dial-drive system, deletion of the 6BA6 1st i-f cathode resistor R3, and the addition of bypass capacitor C61 in the cathode circuit of the 6BA6 2nd i-f stage. The dial-drive drawing is shown in the accompanying figure.

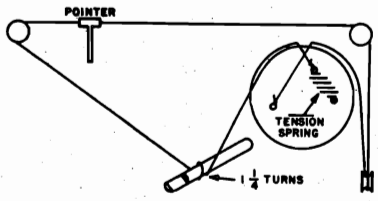

Dial-drive connections for Westinghouse H-190, H-191, H-191A, and H-220.

All parts listed for Model H-190 in the replacement parts list in the manual, except the crystal cartridge and the phono needle, apply also to Model H-220. Additional parts for Model H-220 are listed below.

Part No.	*Description*
RCM30B222M	Capacitor, 2,200 μμf, mica, C61
V-8038	Crystal cartridge (for V-6313 changer)
V-8037	Needle, phono (for V-6313 changer)
V-1164-1	Cabinet (mahogany)
V-4898-1	Catch, bullet
V-3353-3	Slide mechanism (l. h.)
V-3353-4	Slide mechanism (r. h.)
V-4900-1	Strike, bullet catch
V-4965-3	Cable, phono input.

Westinghouse H-161, H-168, H-168A, H-168B

These models appear on *pages 18-6 through 19-32 of Rider's Manual Volume XVIII.* In production of some chassis, V-5596 "HI-KAP" capacitors are substituted for the following capacitors:

V-5040-15 (C7, C8, C9, C61, C62)
V-5040-11 (C19, C20, C63).

Westinghouse H-198, Ch. V-2137-2; H-199, Ch. V-2137-1; H-203, Ch. V-2137

Model H-198 appears on *pages 20-1 through 20-4 of Rider's Manual Volume XX,* Model H-199 appears on *pages 20-5 through 20-8 of the same Volume,* and Model H-203 appears on *pages 19-29 through 19-32 of Rider's Manual Volume XIX.*

In later production, a resistor was added and a capacitor deleted in order to minimize effects caused by production variances in the 6AV6 tubes. The resistor, 470,000 ohms, ¼ watt, was inserted in the lead between terminal #2 of the 1st 455-kc i-f transformer and the selector switch. The capacitor that was deleted had been connected between the avc line and ground. This capacitor is shown as C38 on the Model H-198 schematic and as C37 on the Models H-199 and H-203 schematics.

In case of oscillation and poor sensitivity on the f-m band, a check should be made to determine that the capacitor is not present in any chassis in which the resistor has been inserted. If both the resistor and capacitor are present, the capacitor should be removed and the receiver realigned.

Westinghouse H-203

This model appears on *pages 19-29 through 19-32 of Rider's Manual Volume XIX.* If bass response is objectionable, it can be decreased by changing C29 from 0.05 μf to 0.005 μf.

Westinghouse H-214, H214A, Ch. V-2103-3

These models appear on *pages 20-9 through 20-11 of Rider's Manual Volume XX.* In order to prevent i-f oscillation, the green lead from the 1st i-f transformer to the 6SF7 grid should be dressed close to the chassis. The blue and green leads from the 2nd i-f transformer should be separated so far as possible.

As a heat precaution, all leads must be dressed well away from the ballast resistor R4.

Westinghouse H-303P4, H-304P4, Ch. V-2153

The chassis used in later production contains modifications that eliminate the possibility of burning out the filament of the 3V4 tube by inserting the a-c plug in position for battery operation with the on-off switch in off position. Sets that contain the modified chassis are identified by a warning label pasted on the inside of the back cover. The warning, which reads, "Always remove plug from wall socket before operating battery change-over switch," serves as a further precaution against damage. Sets that do not contain the revisions can be modified in the following manner:

1. Remove the chassis from the cabinet.
2. Refer to the accompanying figure, and remove enough components from their positions over C3 to permit ease in performing steps 3, 4, and 5.
3. Remove the 3 red B+ wires from the C3 section lug of the filter capacitor.
4. Solder the 3 wires together and apply tape to the joint until they are well insulated.
5. Connect a single red wire between C3 lug and the battery switch terminal to which R16 is connected. The wire should be the same type as the wires that were removed.
6. Connect a 0.1-μf, 200-v, capacitor (C27, RCP10W2104M) to the terminal board as shown in the figure.
7. Replace the components that were removed in step 2.

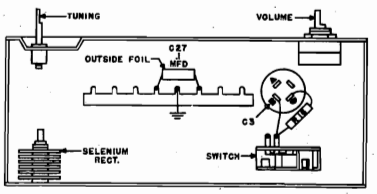

BOTTOM VIEW SHOWING WIRE REVISIONS

©John F. Rider

Compliments of www.nucow.com

Westinghouse H-203, H-212

These models appear on *pages 19-29 through 19-32 of Rider's Manual Volume XIX*. The volume control is tapped at 50,000 ohms from ground rather than 450,000 ohms as shown on the schematic diagram.

In later production, a 33-ohm, ¼-watt resistor (RC10AE330K) was inserted in the lead from pin 7 of the 6BE6 oscillator-converter tube. The purpose of this resistor is to suppress parasitic oscillations that may develop when certain 6BE6 tubes are used.

In early sets, R35 in the cathode circuit of the 12AT7 FM r-f amplifier and mixer tube served as a form around which was wound the reactor, L21. For convenience in later production, the resistor was deleted from the circuit and the reactor was wound on other material. The part number, V-4886-10, shown in the parts list for this item applies to the later version which does not include the resistor, and R35 should be disregarded.

On some chassis, V-5596 "HI-KAP" capacitors are substituted for V-5040-13, C36 and C37, capacitors. These capacitors were substituted for convenience in production, and the operation of the receiver is not affected by the substitution.

Zenith 8H832, Ch. 8E20

This chassis appears on *pages 19-16 through 19-21 of Rider's Manual Volume XIX*. If replacement of one of the speakers is required, care should be taken when connecting the new speaker in the circuit so that the speakers are properly phased. If the speakers are out of phase, all bass notes will be absent and distortion will be dominant. This condition can be corrected by reversing the voice coil wires on the newly replaced speaker.

Zenith 7H820Z, Ch. 7E01Z

Chassis 7E01Z is similar to Chassis 7E01 except that the 45-megacycle f-m band has been removed. The receiver now has the broadcast band and the 100-megacycle f-m band only. The new section is shown in the accompanying diagram. Balancing procedure is the same as for the 7E01.

The change in Parts List is given below:

Ref. No.	Part No.	Description
C30	22-1775	0.047 µf, 400 v
C10	22-1778	0.047 µf, 200 v
C19	22-1809	0.01 µf, 200 v
C25	22-1810	0.1 µf, 200 v
C24	22-1811	0.0047 µf, 400 v
C22	22-1813	0.22 µf, 600 v
C15	22-1814	0.0022 µf, 600 v
	58-128	Two-prong plug
	74-52	Plastic speaker screen
	83-1545	Insulating strip
	85-443	Bandswitch
	93-690	Felt washer
	93-719	0.031 x 3/16" x 7/16" steel washer
	93-961	Ins. shoulder washer
	114-160	6 x ⅞" hex. hd. s.t. screw
	114-277	8-32 x 9/16" hex. hd. m.s.

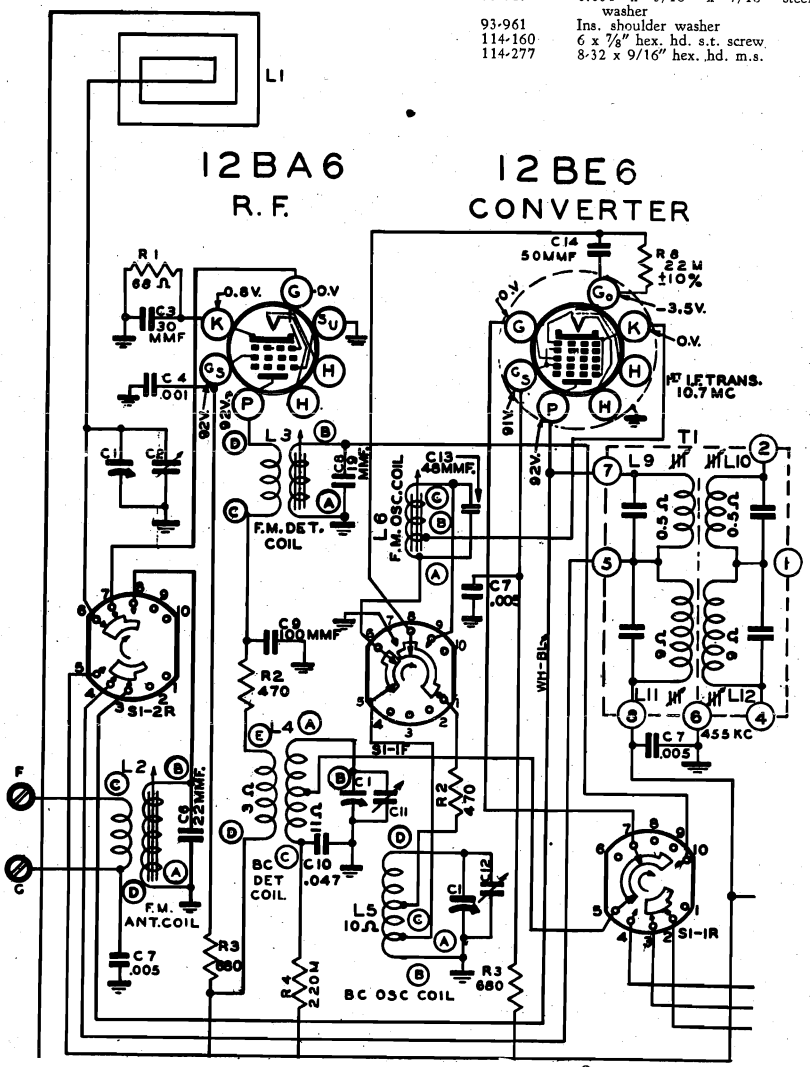

Partial Schematic for Zenith 7H820Z, showing elimination of 45Mc FM Band.

Zenith 7H820, Ch. 7E01

On some of the later run 7E01 chassis, the wax bypass capacitors were replaced with molded capacitors. Their part numbers are as follows:

Ref. No.	Part No.	Description
C10	22-1778	Capacitor, 0.047 µf, 200 v, molded
C22	22-1750	Capacitor, 0.022 µf, 600 v, molded
C15	22-1754	Capacitor, 0.0022 µf, 600 v, molded
C19	22-1809	Capacitor, 0.01 µf, 200 v, molded
C24	22-1811	Capacitor, 0.0047 µf, 400 v, molded
C25	22-1810	Capacitor, 0.1µf, 200 v, molded.

Zenith 7H822Z, Ch. 7E02Z

Chassis 7E02Z is similar to the 7E02 which appears on *pages 18-21,22 through 18-25 of Rider's Manual Volume XVIII*. On the 7E02Z receiver a tone control has been added and a neon bulb on-off indicator. The accompanying figure shows the tone-control circuit. The following parts list shows the new components included in this receiver:

Part No.	Description
12-1546	Indicator socket brkt.
14-857	Model 822Z plastic cab.
22-1025	0.15 µf, 200 v, capacitor
22-1511	50 µµf, ceramic 500 v, capacitor
26-419	Dial scale
46-769	Tuning & vol. con. knob
46-770	Band-switch knob
46-780	Tone-control knob
46-781	Tone-control knob
63-1744	100 ohms, ins. resistor, 20%, ½ w
63-1884	220,000 ohms, ins. resistor, 20%, ½ w
63-2008	Tone control
78-585	Indicator socket
80-402	Dial cord tension spring
83-1593	Felt strip (2 used)
83-1595	Spacer strip
93-961	Ins. shoulder washer
100-105	Neon indicator bulb
199-35	Dial scale
202-687	Instruction book
S-15325	Cab. back & plug cover assy.

The 220,000-ohm resistor, R22, and the neon bulb on-off indicator have been inserted from pin 4 of the 35B5 power amplifier to ground.

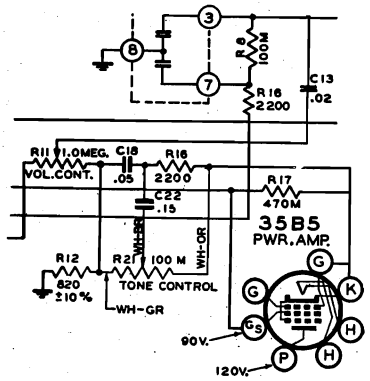

Circuit changes for the Zenith 7H822Z, Chassis 7E02Z.

©John F. Rider

Compliments of www.nucow.com

(Changer model number appears at top rear of changer pan and also on model label on underside of pan.)

NOTE

When servicing this Record changer, note that the Push-off, Velocity Trip, and Set-Down mechanisms function independently. One of these units may become inoperative without affecting the rest of the changer.

At time of publication, changer model label was being stamped with "RUN 4". See page 5.

OPERATING INSTRUCTIONS

This Admiral record changer will automatically play—

twelve of the 10-inch, 78 or 33 RPM records, or
ten of the 12-inch, 78 RPM records, or
twelve of the 12-inch, 33 RPM records, or
fourteen of the 7-inch, 45 RPM records, or
ten of the 7-inch, 33 RPM records.

Do not inter-mix these records.

SETTING RECORD SIZE SELECTOR KNOB: Turn this knob until it points to the size of record to be played.

SETTING SPEED CHANGE KNOB: Turn this knob until it points to the speed of the record to be played. "STD" indicates standard 78 RPM records.

SETTING PUSH-OFF ASSEMBLY: Pivot the Push-off assembly toward the centerpost to play 10-inch records and away from the centerpost to play 12-inch records. For 7-inch records, place the Push-off assembly in the 10-inch position and move the extension arm toward the centerpost.

LOADING AND STARTING: Place a stack of records over the centerpost so that they rest on the record support (64) and the centerpost offset. Records must be the same size and speed. If 10 or 12-inch records are being played, place the record clip on the stack.

The record changer is turned on by placing the function switch **on the radio,** in the "Phono" position.

REJECTING A RECORD: If the record changer will not trip into change cycle at the end of a record, or if you wish to stop playing a record and start playing the next one, merely move the reject knob to the "Rej" position.

STOPPING AND UNLOADING: Do not turn the record changer off during change cycle. Turn the phono motor off by turning the function switch (Radio-Phono) to the center position.

45 RPM ADAPTER: An adapter must be inserted into the center hole of the 45 RPM records in order to play them with this phonograph. A supply of these adapters is included with the set.

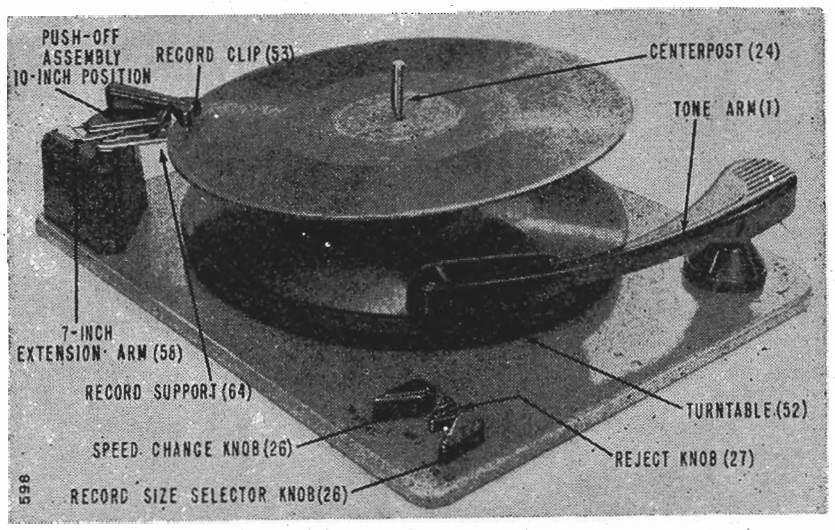

Figure 1. RC500 Record Changer, Top View.

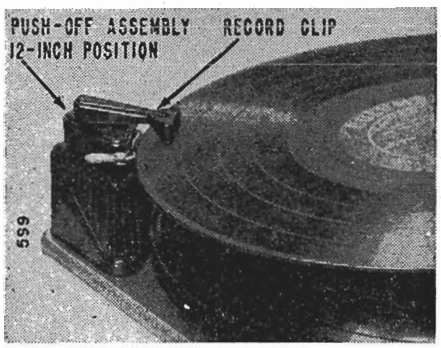

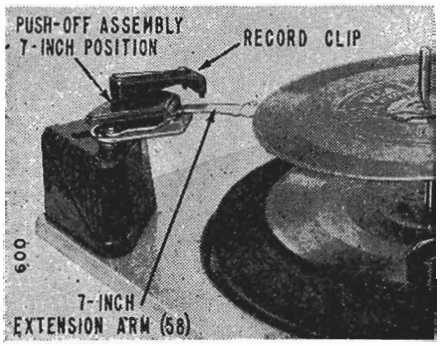

©John F. Rider

Compliments of www.nucow.com

MODEL RC500

CHANGE CYCLE

When following this change cycle, keep in mind that a velocity type trip is used, which depends upon a rapid movement of the tone arm toward the centerpost. Also, note that the Push-off, Trip, and Set-Down mechanisms function independently. Therefore, one of these units may become inoperative without affecting the rest of the changer.

If at all possible, we recommend that you carefully observe the change cycle of a record changer which is operating properly. It is a good idea to rotate the turntable by hand and repeat the change cycle until the function of each part is understood.

The changer operates as follows: The turntable is driven by the motor idler wheel (48), riding against its inside rim. The speed of the turntable is determined by the diameter of the drive shaft (either 78 RPM, 45 RPM, or 33 RPM) which rides against the idler wheel rubber tire (48).

The 78 RPM drive shaft is part of the motor armature. The 33 RPM drive shaft (44) and the 45 RPM drive shaft (45) are moved in and out of position mechanically by the speed change knob. See figure 3.

The changer mechanism is driven during its change cycle by the drive gear (30), which in turn is driven by the geared hub of the turntable. During normal record play, the "dead spot" on the drive gear is held next to the turntable hub by the gear indexing arm (41) and spring (39).

This changer employs a velocity trip, which consists primarily of two parts: the trip motion arm (32), and the gear engagement pawl (33). These parts are mounted near the "dead spot" on the drive gear. See Figure 2A.

During normal record play, the trip slider (36) is moved slowly by the stud on the arm control lever (23) which moves with the tone arm. The stud on the trip slider (36) rides against the trip motion arm (32), moving it very slightly. Since the gear engagement pawl (33) is held against the trip motion arm (32) by the trip friction washer (34), the gear engagement pawl (33) is also moved slightly toward the turntable hub. Since this movement is only slight, the vertical catch on the gear engagement pawl (33) is just touched and "kicked away" by the lug on the turntable hub. This occurs with each revolution of the turntable until the gear engagement pawl is moved in rapidly enough to be positioned in front of the lug before the next turntable cycle.

This rapid movement only occurs when the trip slider (36) is moved rapidly, by the tone arm, as the needle enters the trip grooves of the record. The gear engagement pawl (33) then moves in front of and engages the lug on the turntable hub. This causes the drive gear (30) to be rotated far enough so that the teeth on the drive gear will engage the teeth on the turntable hub, starting the change cycle. See figure 2B.

The changer can also be tripped by moving the reject knob to the "Rej" position. The stud on the end of the reject lever (88) moves the gear engagement pawl (33) into position to engage the lug on turntable hub.

As the drive gear begins to rotate, the control cam (90) also rotates, since both parts are mounted on the same shaft. See fig. 4. As the control cam rotates clockwise, roller (109) riding against the cam moves the drive link (107), which in turn rotates the control plate (102). As the control plate rotates, the incline tab (102A) rides across the tone arm lift rod (12), lifting the tone arm from the record. The stud on the arm control lever (23) then is engaged by the safety arm (105) (which rotates with the control plate), moving the tone arm away from the centerpost.

When the tone arm is almost clear of the record, the stud on the push-off link (84) (which is pivoted by the control cam), pivots the push-off arm (79) counter-clockwise. Since the push-off arm is held to the push-off plate and shaft (64) by two Allen screws, the push-off plate is also

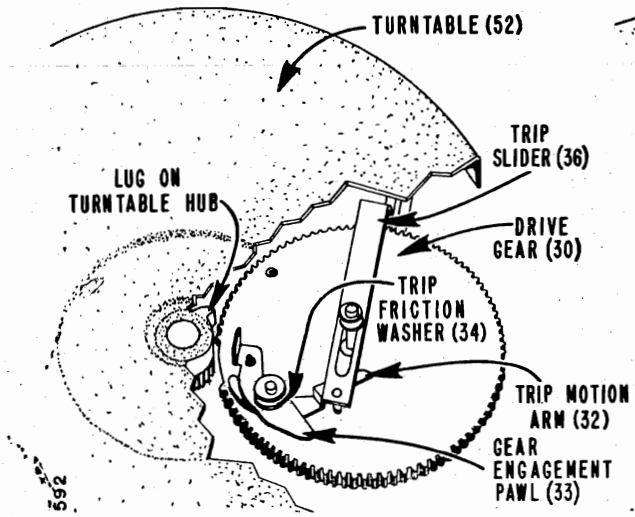

Figure 2A. Drive Gear Position Out of Change Cycle.

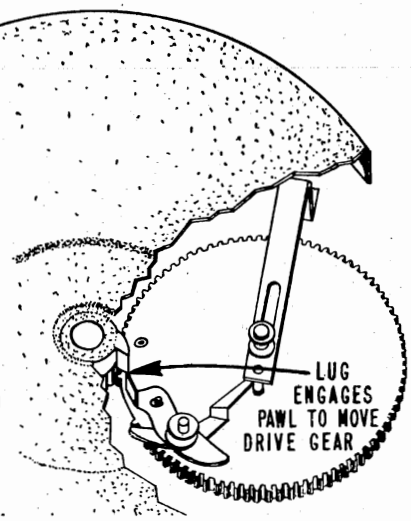

Figure 2B. Drive Gear Position During Change Cycle.

©John F. Rider

Compliments of www.nucow.com

pivoted. Just before the control cam reaches half rotation, the tone arm will be positioned as far as possible from the centerpost, and the push-off plate (60) will "push-off" the record to the turntable.

As the control cam (90) rotates through the second half of the change cycle, the push-off plate is returned by the push-off arm return spring (78) and the remainder of the stack of records drops to the record support (64).

At the same time, the tone arm is returned by the set-down spring (98) which causes the set-down indexing stud on the size change plate (99) to ride against the indexing portion of the arm control lever (23).

The tone arm will move toward the record until the set-down indexing stud on the size change plate has reached the indexing point (end of cut-away section) on the arm control lever. After the arm stops moving inward, the lift rod will ride down the control plate incline (102A), and the tone arm will move toward the record.

Just before the tone arm touches the record, the safety arm engages the stud on the size change plate (99) and pivots it away from the arm control lever (23); releasing the tone arm.

The set-down point is determined by the position of the size change plate (99), which can be set for either 7-inch, 10-inch, or 12-inch set-down by the record size selector knob.

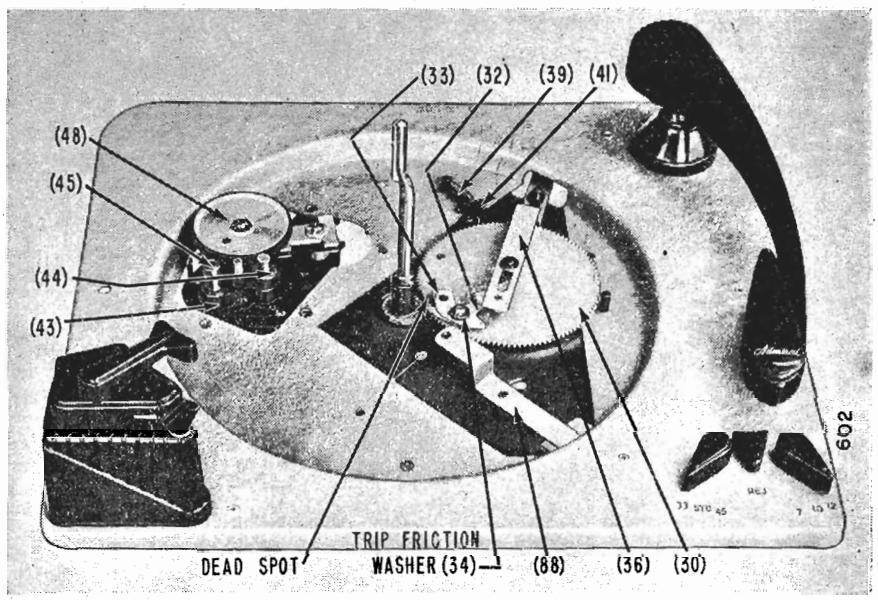

Fig. 3. RC500 Record Changer with Turntable Removed.

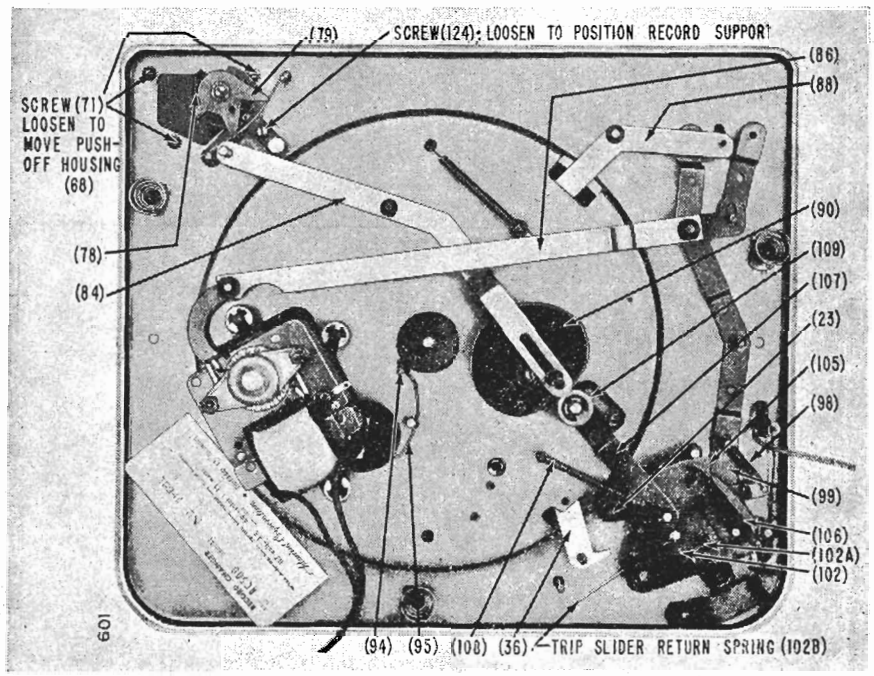

Fig. 4. RC500 Record Changer, Bottom View, Changer Out of Cycle.

©John F. Rider

Compliments of www.nucow.com

MODEL RC500

ADJUSTMENTS

When making the following adjustments, keep in mind that the Push-off, Trip, and Set-Down mechanisms function independently. Therefore, one of these units may become inoperative without affecting the rest of the changer.

VELOCITY TRIP MECHANISM

This record changer uses a velocity type trip, which depends upon a rapid movement of the tone arm toward the centerpost in any area between 2 7/8″ to 7/8″ from the center of the record. **This trip requires no adjustment.** However, in order for the changer to trip properly, there must be sufficient friction between the trip motion arm (32) and the gear engagement pawl (33). If the friction is lost, a small amount of lubricant (such as lubriplate #110) should be placed between these parts. If this does not help, it may be necessary to replace the trip friction washer (34). See Figure 2A.

SET-DOWN ADJUSTMENT

Adjustment of the set-down point, is made by adjusting the set-down adjusting screw (6). See Figure 5. **The tone arm will automatically set-down properly on 7-inch or 12-inch records if the set-down adjustment is made properly on a 10-inch record.** The set-down adjusting screw is accessible through the hole in the right side of the tone arm. Turning this screw in moves the set-down point of the tone arm closer to the centerpost, and turning this screw out moves it away from the centerpost. Make this adjustment as follows:

1. Place the record size selector knob in the "10" position.
2. Push the reject knob to the reject position. Then start to rotate the turntable clockwise by hand.
3. As the change cycle is almost completed, and the tone arm just starts to move down towards the turntable, place a ruler against the centerpost and check the distance between the near side of the centerpost and the needle. This distance should be between 4 10/16″ and 4 11/16″.
4. If the 10-inch adjustment is correct, the needle should set down between 5 19/32″ and 5 22/32″ from the near side of the centerpost on 12-inch records, and between 3 1/4″ to 3 5/32″ on 7-inch records.

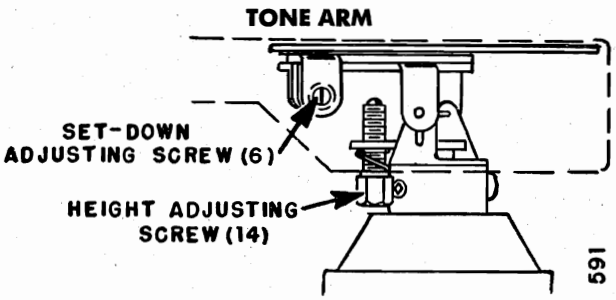

Figure 5. Set-Down and Height Adjustments.

ADJUSTING THE TONE ARM HEIGHT

This record changer is so designed that the tone arm will clear the bottom record of a stack to be played if the needle is ¼″ above the changer pan when the changer is not in change cycle and 1⅜″ above the turntable during change cycle. See Figure 6. With proper tone arm height setting, the tone arm will lift high enough during change cycle to clear a complete stack of records of any type on the turntable. This stack may consist of as many records as specified on page 1. Make this adjustment by placing the size selector knob in the "10" or "12" inch position, check the distance between the needle and the changer pan with the changer out of change cycle. If the needle is more than ¼″ above the pan, turn the lift adjusting screw (14, Figure 5) counterclockwise; if less, turn clockwise.

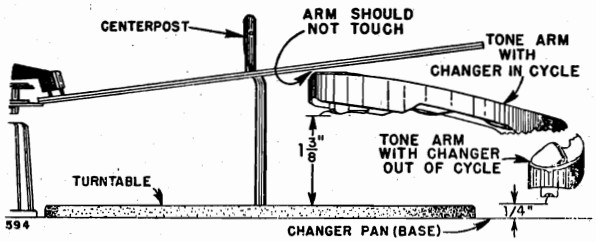

Figure 6. Checking Tone Arm Height.

POSITIONING RECORD SUPPORT (64)

If the record support is not positioned evenly under the bottom record of a stack to be played, one side of the record may drop to the turntable before the other. With the push-off assembly in the 10-inch position, place a 10-inch record over the upper portion of the centerpost so that the edge of the record fits against the edge of the record support (64). See figures 4 and 7. The contour of the record SHOULD follow the contour of the record support. If these contours do not match, position the push-off assembly as follows:

CAUTION: Be sure that the "testing" record has an even edge. For best results, try more than one record.

1. Loosen the screw (124) that holds the push-off positioning arm assembly (75) stationary.
2. Grip the push-off assembly and pivot it to the point where the edge of the record support "lines up" with the edge of the record.
3. Remove the record and tighten the screw (124).
4. Load the changer with a stack of 10-inch records, and "reject" the entire stack to the turntable. Check to see that all records drop to the turntable evenly.

©John F. Rider

Compliments of www.nucow.com

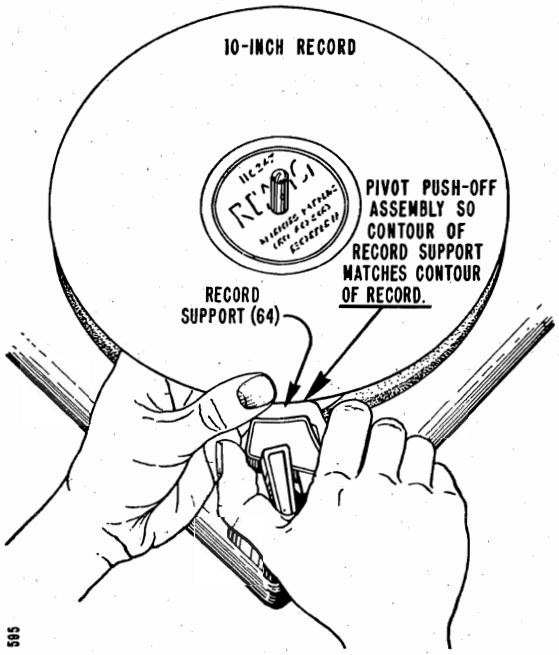

Figure 7. Positioning Record Support with 10-inch Record.

ADJUSTING DISTANCE BETWEEN RECORD SUPPORT (64) AND CENTERPOST (24)

If records do not push-off satisfactorily, or more than one record drops to the turntable during change cycle, it may be necessary to adjust the distance between the centerpost and the record support. See Figures 4 and 8. Make this adjustment as follows:

1. Place the push-off assembly in the 10-inch position.
2. Hold the centerpost as far away from the push-off assembly as possible.
3. Measure the distance from the edge of the record support (64) to the inside edge of the offset shelf on the centerpost. This distance should be between 4 29/32" and 4 31/32".
4. If it is necessary to adjust for this distance, loosen the three screws (71) holding the plastic push-off housing (68) to the changer pan. Then move the assembly until the specified distance is obtained.
5. Tighten the three screws, and recheck the distance. Place a stack of records (any size) on the changer, and "reject" each record in the stack to the turntable. Check to see that each record is pushed off satisfactorily. If one side of the record drops to the turntable before the other, it may be necessary to make the "Positioning Record Support (64)" adjustment.

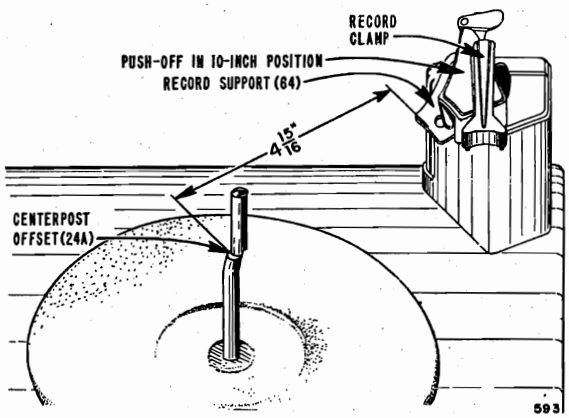

Figure 8. Checking Distance from Centerpost to Record Support.

SERVICE AND REPAIR

PRODUCTION CHANGES

Changer model label (on underside of changer pan) is stamped with run number corresponding to production changes.

RUN 1: Start of production.

RUN 2: Knob escutcheon (121) was added to changer. Speed change arm (89) and set-down change arm (96) were also changed so that knobs would line up with numbers on escutcheon. If wrong part for (89) or (96) is used, knob pointer will not correctly indicate changer set-down or speed. **RUN 3: See (32), (36) in parts list. RUN 4: See (24).**

LUBRICATION

DO NOT apply grease or oil to the trip slider (36). Also, under normal operating conditions, the motor should never require oiling.

Friction can sometimes be increased between the gear engagement pawl (33) and the trip motion arm (32), by placing a small amount of lubriplate #110 between these two parts. If a substitute lubricant is used, be sure that it is of equal viscosity (weight). See "Velocity Trip Mechanism" on page 4.

The rest of the changer should be lubricated with grease (such as lubriplate #107) whenever it comes into the shop for repair or adjustment. A good automobile chassis grease can be used for this purpose. All pivot and friction points should be greased.

The powdered iron roller (109) and oilite bearings (used in the turntable hub and tone arm base) may be lubricated with SAE No. 20 oil.

Care should be taken to prevent any of the lubricant from coming into contact with the idler wheel tire, the rubber drive belts, or any of the rubber grommets. Also be careful, when using oil, that an excess does not seep into the felt of the turntable.

REMOVING AND REPLACING TURNTABLE

To remove the turntable, first remove the turntable retaining clip (51). Be sure that the changer is not in change cycle, and then, grasp the turntable by its edges and lift up. Before replacing the turntable, make sure that the changer is not in change cycle. The pickup arm should be positioned away from the turntable. In replacing the turntable, force is not needed to seat it. Make certain, however, that the idler wheel of the motor has been pushed in towards the centerpost and that the idler wheel is making contact with the

©John F. Rider

Compliments of www.nucow.com

MODEL RC500

inner side of the turntable flange. The idler wheel should be pushed in with a screwdriver or similar flat tool. Do NOT push toward the rear of the changer.

REPLACING CONTROL KNOBS (26 AND 27)

To remove the control knobs, place the blade of a screw driver between the knob and the retaining ring, directly under the knob, and pry up.

If it is difficult to remove the knobs without scratching the changer pan or the escutcheon (121), it may be necessary to use a flat ruler as a protector. Place the ruler next to the knob. Then insert a screw driver under the knob and pry up.

When re-installing the speed change knob, or the record size selector knob, place the blade of a screw driver between two halves of the knurled shaft and position the control in the center position. Be sure that the knobs lock into position. Line up the pointed end of the speed change knob with "STD", and the record size selector knob with "10", and then push the knobs straight down.

RECORD CHANGER TROUBLE SHOOTING

Changer Will Not Trip.
1. Check to see that the trip slider (36) moves freely.
2. Apply small amount of grease between the trip motion arm (32) and the gear engagement pawl (33). See "Trip Mechanism" on page 4.
3. Check tension on trip friction washer (34). If necessary, replace with new washer.
4. Check for grease or oil on trip slider.
5. Check for broken, loose, or misplaced trip slider return spring (102B, Figure 4). It may have slipped over the stud on the slider.

Changer Repeatedly Trips into Change Cycle.
1. Check tension of gear indexing spring (39).
2. Check for bent trip slider return spring (102B, Figure 4).
3. Check for bent trip slider (36).

Tone Arm Does Not Set-Down Properly.
1. Check set-down adjustment. See "Set-Down Adjustment" on page 4.
2. Check to see that the record size selector knob has locked into position.
3. Check for broken, weak, or missing control plate return spring (108).

*** Tone Arm Skips Across Records.**
1. Check to see that the cabinet is level.
2. Check for worn needle.
3. Check height adjustment. See page 4.

Changer Causes Rumble or Noise.
1. BE SURE that the shipping screws (72) on each side of changer pan have been removed.
2. Check for any mechanical rub near the 3-speed motor.
3. Check for broken or missing float spring (74).

Records Do Not Push Off or More Than One Record Drops to the Turntable.
1. See "Adjusting Distance Between Record Support and Centerpost" on page 5.
2. Check for broken, missing, or weak push-off return spring (78). The push-off plate (60) may not be returning correctly.
3. Check to see that the push-off assembly is properly locked into position.
4. Check to see that no foreign material is between record support (64) and push-off plate (60).

Changer Trips Into Change Cycle Before Finishing Record.
1. Check for foreign material between trip motion arm (32) and gear engagement pawl (33).
2. Check for bent trip slider return spring (102B, Figure 4).
3. Check for bent trip slider (36).

Records Fall to Turntable Unevenly.
See "Positioning Record Support" on page 5.

Changer Stalls in Change Cycle.
1. Idler wheel (48) rubber tire may have foreign material on it. Try cleaning it with carbon tetrachloride solution.
2. Motor drive belts (43) may be slipping. If necessary, replace with a new belt.
3. Be sure push-off assembly is locked in position.

CAUTIONS

1. See that the rubber tire on the idler wheel (48), and both drive belts are kept clean from oil, grease, dirt or any foreign material. Carbona or carbon tetrachloride may be used for cleaning these parts. When handling these parts, keep fingers and hands away from the driving surface. Natural body oils may cause slippage.
2. To avoid scratching changer pan or escutcheon, see discussion at top of page when replacing control knobs (26, 27).
3. Always move each control until it makes a definite stop and locks into position. Erratic action will result if this is not done.
4. Be sure that the shipping screws (72) on each side of the changer pan are removed. Noise will result from any mechanical vibration, and can be heard as a rumble in the speaker.

*IMPORTANT: If needle is type not held by knurled nut and does not follow 33 or 45 RPM grooves, bend needle tip at right angles to record, or replace. If trouble persists with either type cartridge, install parts (32) and (36). See parts list.

©John F. Rider

Compliments of www.nucow.com

MODEL RC500

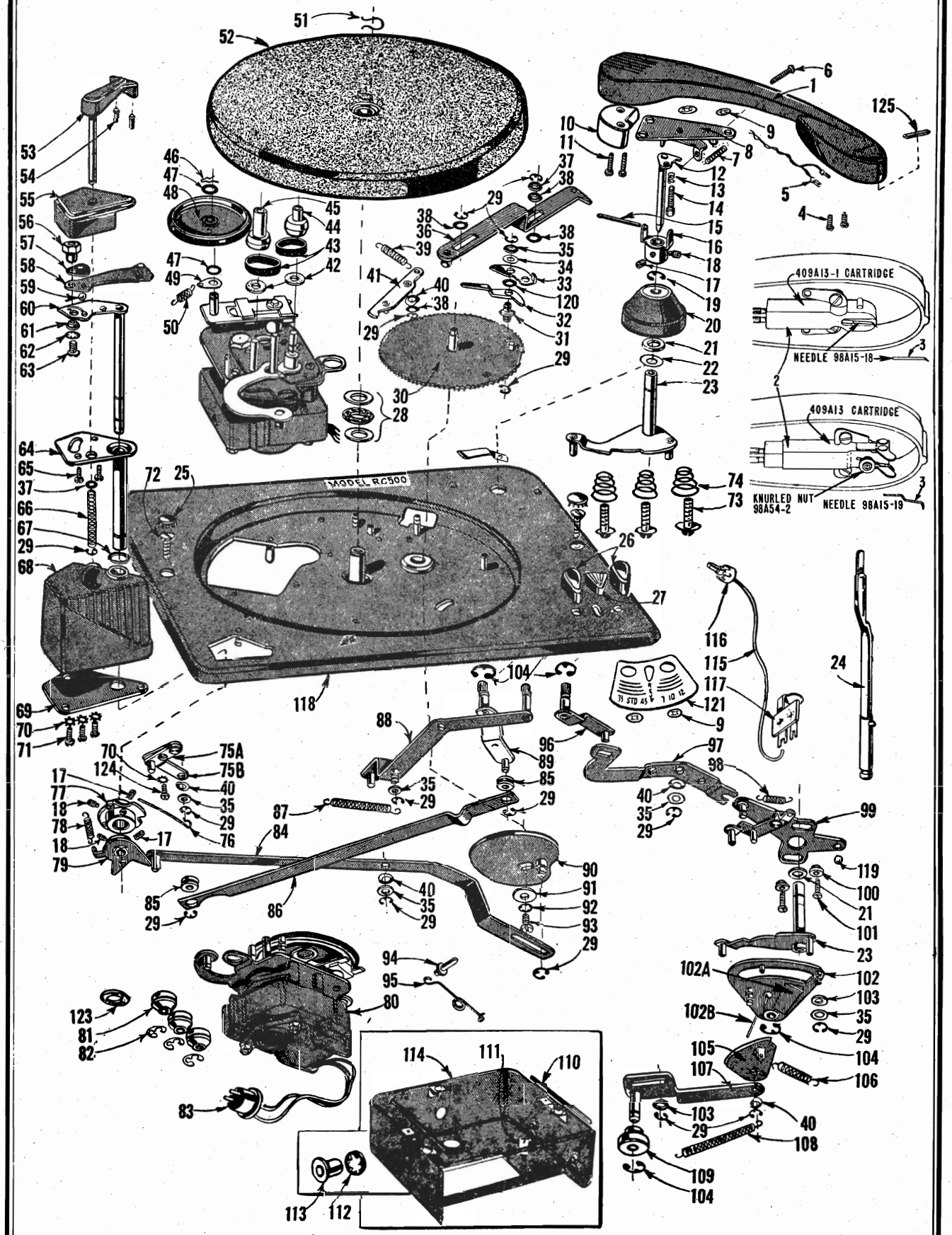

Figure 9. RC500 Record Changer, Exploded View.

©John F. Rider

Compliments of www.nucow.com

MODEL RC500

RC500 PARTS LIST

Ref. No.	Part No.	Description
1	403C51	Tone Arm (Maroon)
	403C51 G	Tone Arm (Gold)
2	409A13-1	Pickup Cartridge with needle (push-in type)
	409A13	Pickup Cartridge with needle and knurled nut
		Cartridges (with needle) are interchangeable
	98A54-2	Knurled Nut (for 409A13 Cartridge)
3	98A15-18	Needle for 409A13-1 Cartridge
	98A15-19	Needle for 409A13 Cartridge
4	1A72-1-20	Cartridge Mtg. Screw Shakeproof type 25 (2 req.)
5	G400A529	Tone Arm Lead and Pin Jack Assembly
6	45-750-C2-47	Set-Down Adjusting Screw, #4-40x¾ BH MS
7	405A137	Set-Down Adjusting Lock Spring
8	G400A526	Tone Arm Mtg. and Pivot Plate Assembly
9	2B10-5-59	Speed Nut (4 req.)
10	404A31	Tone Arm Counterweight
11	1A70-6-20	Counterweight Retaining Screws, #4 x ⅝" (2 req.)
12	G400A520	Lift Rod and Plate Assembly
13	405A138	Lift Adjusting Spring
14	402A245	Lift Adjusting Screw
15	414A43	Pivot Shaft
16	G400A525	Tone Arm Support and Hub (includes set screws)
17	1A43-14	Allen Set Screw, #8-32x3/16" (3 req.)
18	402A247	Allen Set Screw, #8-32x¼" (3 req.)
19	401A355-3	Retaining Ring
20	403A52	Tone Arm Plastic Base (Maroon)
	403A52 G	Tone Arm Plastic Base (Gold)
21	401A358	Spacer Washer
22	401A284	Bronze Washer (.316 x 15/32 x .005)
23	G400A542	Arm Control Lever and Shaft Assembly
‡24	G400B505	Centerpost (Run 3 or earlier; uses pin 94 and spring 95)
	G400B505-1	Centerpost (Run 4 or later; uses retaining ring 401A355-3)
	401A355-3	Retaining ring, for G400B505-1 centerpost
25	13A2-8-57	Snap-in Buttons
26	403A54	Speed Change or Record Size Selector Knob (Maroon)
	403A54 G	Speed Change or Record Size Selector Knob (Gold)
27	403A55	Reject Knob (Maroon)
	403A55 G	Reject Knob (Gold)
28	415A11	Thrust Bearing
29	401A355-1	Retaining Ring
30	G400A532	Drive Gear and Stud Assembly
31	402A229	Trip Pivot Stud
32	98A15-22	Trip Motion Arm (Supplied with Trip Slider (36). Replace both parts.)
33	401A352	Gear Engagement Pawl
34	401A353	Trip Friction Washer
35	4B1-68-47	Washer
36	98A15-22	Trip Slider (Supplied with Trip Motion Arm (32). Replace both parts.)
37	4B1-67-47	Washer (.196 x 5/16 x 1/32)
38	4B2-178-0	Washer (.196 x ⅜ x 1/64)
39	405A134	Gear Indexing Spring
40	405A22	Spring Washer
41	G400A549	Gear Indexing Arm and Stud Assembly
42	98A15-9	Oil Retaining Felt Washer (2 req.)
43	406A20	Drive Belt (2 req.)
44	98A15-11	45 RPM Drive Shaft (60 cycles)
45	98A15-10	33 RPM Drive Shaft (60 cycles)
46	405A15	Idler Wheel Retaining Clip
47	412A30	Fibre Washer (2 req.)
48	G400A279	Idler Wheel Assembly
49	98A15-21	Idler Wheel Tie Lug
50	98A15-20	Idler Wheel Spring
51	414A36	Turntable Retaining Clip
52	G400B507	Turntable
53	G400A511	Record Clamp and Shaft and Rubber Tips (Maroon)
	G400A511 G	Record Clamp and Shaft and Rubber Tips (Gold)
54	406A25	Record Clamp Rubber Tip (2 req.)
55	403B53	Push-off Plastic Cap (Maroon)
	403B53 G	Push-off Plastic Cap (Gold)
56	402A249	Push-off Plate Nut
57	401A326	7" Record Support Detent Spring
58	G400A510	7" Record Support
59	415A28-1	Ball Bearing (⅛" diameter)
60	G400A509	Push-off Plate and Shaft Assembly
61	402A250	Spacer Washer
62	3B1-23-47	Lockwasher #4 I.T.
63	45-312-C2-47	Screw, #4x5/16 BH MS
64	G400A508	Record Support and Tube Assembly
65	1A72-2-20	Screw, Shakeproof type 25 (# 4 x 5/16")
66	405A136	Record Clamp Spring
67	4B1-158-47	Washer (.390 x 9/10 x 1/32)
68	403C50	Plastic Push-off Housing
69	401A346	Housing Bottom Plate
70	3B1-3-47	Lockwasher, # 6 E. T.
71	1A68-13-20	Plastiscrew, # 6 x 5/8 R.H.
72	103-1250-F2-57	"Hold Down" Screw, #10-32 x 1¼" (for shipping only)
73	AA210	Mounting Screw and Washer (table models only)
74	405A139	Float Spring (3 req.)
75	G400A565	Push-off Positioning Arm Assembly
76	414A40	Push-off Indexing Spring
77	G400A514	Push-off Index Plate and Hub Assembly
78	405A133	Push-off Return Spring
79	G400A517	Push-off Arm and Hub Assembly
80	*407B19	*3-Speed Motor Complete, 60 cycle, 117 volts
81	406A19	Motor Mounting Grommet (3 req.)
82	401A355-4	Motor Mtg. Retaining Ring (3 req.)
83	88A8-1	Phono Motor Plug
84	G400A562	Push-off Link and Stud Assembly
85	406A24	Speed Change Link Grommets (2 req.)
86	401A322	Speed Change Link
87	405A135	Reject Return Spring
88	G400A551	Reject Arm and Stud Assembly
†89	G400A567	Speed Change Arm (Run 2 or later)
	G400A553	Speed Change Arm (Run 1)
90	G400A548	Control Cam and Stud Assembly
91	401A145	Control Cam Washer
92	3B1-26-47	Lockwasher, # 8 I.T.
93	85-375-C2-47	Screw, # 8/32 x ⅜" BH MS
94	402A228	Centerpost Retaining Pin (Use only with early centerpost (24)
95	414A42	Centerpost Lock Spring
†96	G400A568	Set-Down Change Arm (Run 2 or later)
	G400A545	Set-Down Change Arm (Run 1)
97	401A332	Set-Down Change Link
98	405A130	Set-Down Spring
99	G400A546	Set-Down Change Plate and Arm Assembly
100	402A238	Spacer
101	1A70-11-20	Plastiscrew, # 6 x 7/16"
102	G400A537	Control Plate Assembly
103	401A173	Washer
104	401A355-2	Retaining Ring
105	401A345	Safety Arm
106	405A131	Safety Spring
107	G400A538	Drive Link and Stud Assembly
108	405A132	Control Plate Return Spring
109	415A27	Drive Link Roller
110	403A38-1	Plastic Trim (2 req.)
111	32A88	Antenna Lead Support
112	2B10-10-59	Speed Nut (4 req.)
113	27A24	Bottom Cover Bushing (4 req.)
114		Bottom cover
115	413A11-1	Shielded Cable (includes plug, 5")
116	R8A2-3	Plug (for lead-in cable)
117	10B1-18	Terminal Board
118		Changer Pan
119	415A28-2	Ball Bearing (5/32 diameter)
120	412A36	Fibre Washer (.196 x ⅜" x .005)
‡121	403B57	Escutcheon (Maroon) (Not on early sets. See Run 2 on page 5)
	403B57 G	Escutcheon (Gold)
122	4B1-19-47	Washer (.125 x ¼ x 1/32 Steel)
123	412A38	Motor Mounting Washer
124	65-187-C2-47	Screw, #6-32 x 3/16"
125	414A45	Tone Arm Weight

PARTS FOR CONVERTING 407B19 MOTOR TO 50 CYCLE

45 RPM Drive Shaft (50 cycles)	98A15-15
78 RPM Drive Shaft Spring (50 cycles)	405A113
33 RPM Drive Shaft (50 cycles)	405A112

*407B19 motor is not used on "Canadian Admiral" changers. For Canadian Admiral replacement motors order:
- 60 cycle, 105 to 125 volts 407X19-60
- 25 cycle, 105 to 125 volts 407X19-25

‡Run number is stamped on changer model label (on underside of changer).

†If wrong part is used, knob pointer will not correctly indicate changer set-down or speed. See "RUN 2" on page 5, and ‡ footnote above.

©John F. Rider

Compliments of www.nucow.com

Changer model number appears at top rear of changer pan and also on model label on underside of pan. Except for a few early changers, the changer model labels are stamped with run numbers (RUN 1, RUN 2, etc.) corresponding to production changes.

RC500 Record Changers (covered in Service Manual No. S298) and RC550 Record Changers are identical except for the control knobs, associated arms and links, and a few minor parts (such as washers, screws, etc.). Note that the position of the selector cam (89) determines both speed and set-down in RC550 changers.

When servicing this Record Changer, note that the Push-off, Velocity Trip, and Set-Down mechanisms function independently. One of these units may become inoperative without affecting the other two.

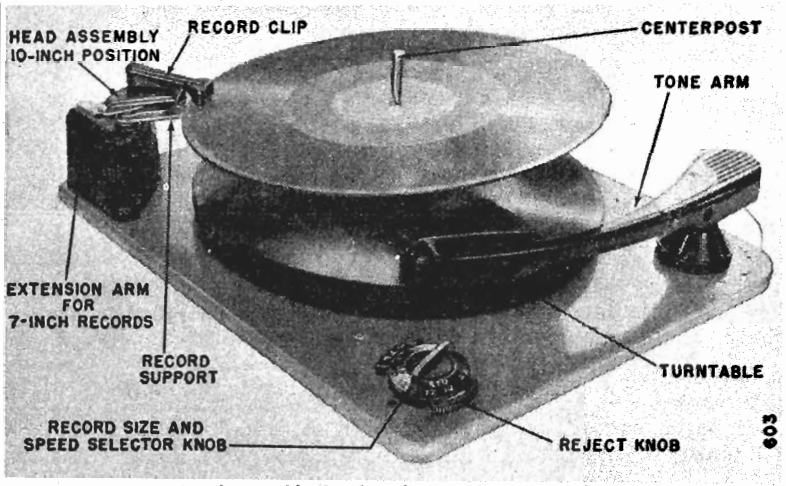

Head Assembly Set for Playing 10-inch Records.

Figure 1. RC550 Record Changer, Top View.

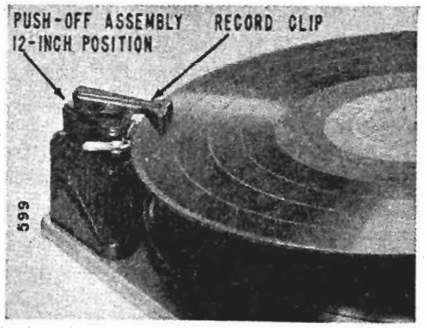

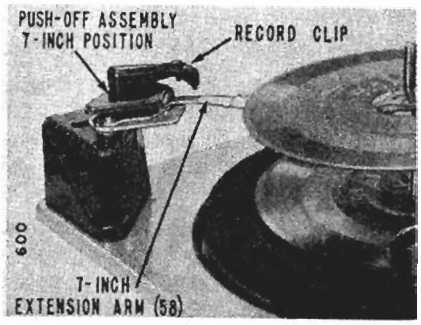

OPERATING INSTRUCTIONS

This Admiral record changer will automatically play—

twelve of the 10-inch, 78 or 33 RPM records, or
ten of the 12-inch, 78 RPM records, or
twelve of the 12-inch, 33 RPM records, or
fourteen of the 7-inch, 45 RPM records, or
ten of the 7-inch, 33 RPM records.

Do not inter-mix these records.

SETTING THE SIZE AND SPEED SELECTOR KNOB: The available record sizes (7, 10, 12) are engraved under the three different speeds (33, STD, 45) on this knob. Rotate the knob until the size of record to be played (under the proper speed), lines up with the indicating dot on the changer pan. (Note that no size number is engraved under "45" since only 7-inch 45 RPM records are available.)

SETTING PUSH-OFF ASSEMBLY: Pivot the Push-off assembly toward the centerpost to play 10-inch records and away from the centerpost to play 12-inch records. For 7-inch records, place the Push-off assembly in the 10-inch position and move the extension arm toward the centerpost.

LOADING AND STARTING: Place a stack of records over the centerpost so that they rest on the record support (64) and the centerpost offset. Records must be the same size and speed. If 10 or 12-inch records are being played, place the record clip on the stack.

The record changer is turned on by placing the function switch **on the radio,** in the "Phono" position.

REJECTING A RECORD: If the record changer will not trip into change cycle at the end of a record, or if you wish to stop playing a record and start playing the next one, merely rotate the reject knob to the left momentarily.

STOPPING AND UNLOADING: Do not turn the record changer off during change cycle. Turn the phono motor off by turning the function switch **on the radio** to the center position.

45 RPM ADAPTER: An adapter must be inserted into the center hole of the 45 RPM records in order to play them with this changer. A supply of these adapters is included with the set.

©John F. Rider

Compliments of www.nucow.com

MODEL RC550

CHANGE CYCLE

When following this change cycle, keep in mind that a velocity type trip is used, which depends upon a rapid movement of the tone arm toward the centerpost. Also, note that the Push-off, Trip, and Set-Down mechanisms function independently. One of these units may become inoperative without affecting the other two.

If at all possible, we recommend that you carefully observe the change cycle of a record changer which is operating properly. It is a good idea to rotate the turntable by hand and repeat the change cycle until the function of each part is understood.

The changer operates as follows: The turntable is driven by the motor idler wheel (48), riding against its inside rim. The speed of the turntable is determined by the diameter of the drive shaft (either 78 RPM, 45 RPM, or 33 RPM) which rides against the idler wheel rubber tire (48).

The 78 RPM drive shaft is part of the motor armature. The 33 RPM drive shaft (44) and the 45 RPM drive shaft (45) are moved in and out of position mechanically by the motor shift link (84), which is controlled by the selector cam (89). See figure 4.

The changer mechanism is driven during its change cycle by the drive gear (30), which in turn is driven by the geared hub of the turntable. During normal record play, the "dead spot" on the drive gear is held next to the turntable hub by the gear indexing arm (41) and spring (39).

This changer employs a velocity trip, which consists primarily of two parts: the trip motion arm (32), and the gear engagement pawl (33). These parts are mounted near the "dead spot" on the drive gear. See Figure 2A.

During normal record play, the trip slider (36) is moved slowly by the stud on the arm control lever (23) which moves with the tone arm. The stud on the trip slider (36) rides against the trip motion arm (32), moving it very slightly. Since the gear engagement pawl (33) is held against the trip motion arm (32) by the trip friction washer (34), the gear engagement pawl (33) is also moved slightly toward the turntable hub. Since this movement is only slight, the vertical catch on the gear engagement pawl (33) is just touched and "kicked away" by the lug on the turntable hub. This occurs with each revolution of the turntable until the gear engagement pawl is moved in rapidly enough to be positioned in front of the lug before the next turntable cycle.

This rapid movement only occurs when the trip slider (36) is moved rapidly, by the tone arm, as the needle enters the trip grooves of the record. The gear engagement pawl (33) then moves in front of and engages the lug on the turntable hub. This causes the drive gear (30) to be rotated far enough so that the teeth on the drive gear will engage the teeth on the turntable hub, starting the change cycle. See figure 2B.

The changer can also be tripped by rotating the reject knob to the left momentarily. The stud on the end of the reject arm (88) moves the gear engagement pawl (33) into position to engage the lug on turntable hub.

As the drive gear begins to rotate, the control cam (90) also rotates, since both parts are mounted on the same shaft. See fig. 4. As the control cam rotates clockwise, drive link roller (109) riding against the cam moves the drive link (107), which in turn rotates the control plate (102). As the control plate rotates, the incline tab (102A) rides across the tone arm lift rod (12), lifting the tone arm from the record. The stud on the arm control lever (23) then is engaged by the safety arm (105) (which rotates with the control plate), moving the tone arm away from the centerpost.

When the tone arm is almost clear of the record, the stud on the push-off link (86) (which is pivoted by the control cam), pivots the push-off arm (79) counterclockwise. Since the push-off arm is held to the push-off plate and shaft (60) by two Allen screws, the push-off plate is also

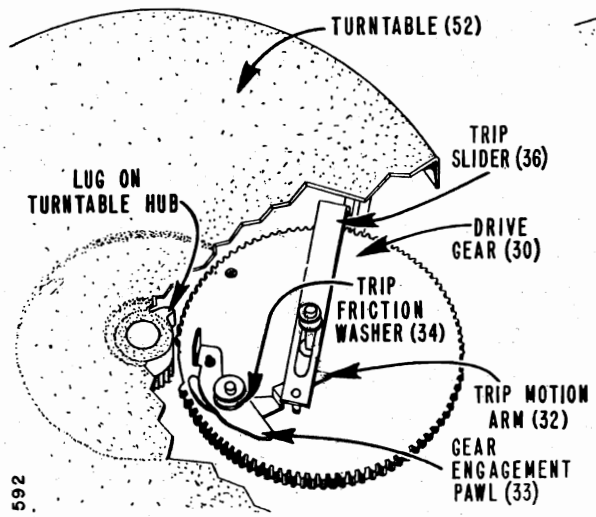

Figure 2A. Drive Gear Position Out of Change Cycle.

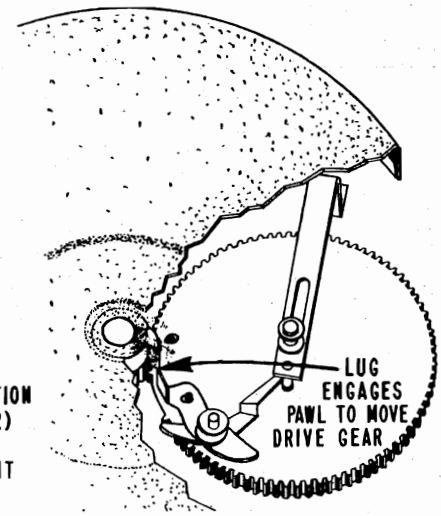

Figure 2B. Drive Gear Position During Change Cycle.

©John F. Rider

Compliments of www.nucow.com

pivoted. Just before the control cam reaches half rotation, the tone arm will be positioned as far as possible from the centerpost, and the push-off plate (60) will "push-off" the record to the turntable.

As the control cam (90) rotates through the second half of the change cycle, the push-off plate is returned by the push-off arm return spring (78) and the remainder of the stack of records drops to the record support (64). See figure 1.

At the same time, the tone arm is returned by the set-down spring (98) which causes the set-down indexing stud on the size change plate (99) to ride against the indexing portion of the arm control lever (23).

The tone arm will move toward the record until the set-down indexing stud on the size change plate has reached the indexing point (end of cut-away section) on the arm control lever. After the arm stops moving inward, the lift rod will ride down the control plate incline (102A), and the tone arm will move toward the record.

Just before the tone arm touches the record, the safety arm engages the stud on the set-down change plate (99) and pivots it away from the arm control lever (23); releasing the tone arm.

The set-down point is determined by the position of the set-down change plate (99), which can be set for either 7-inch, 10-inch, or 12-inch set-down by the set-down change lever (97) which is controlled by the selector cam (89).

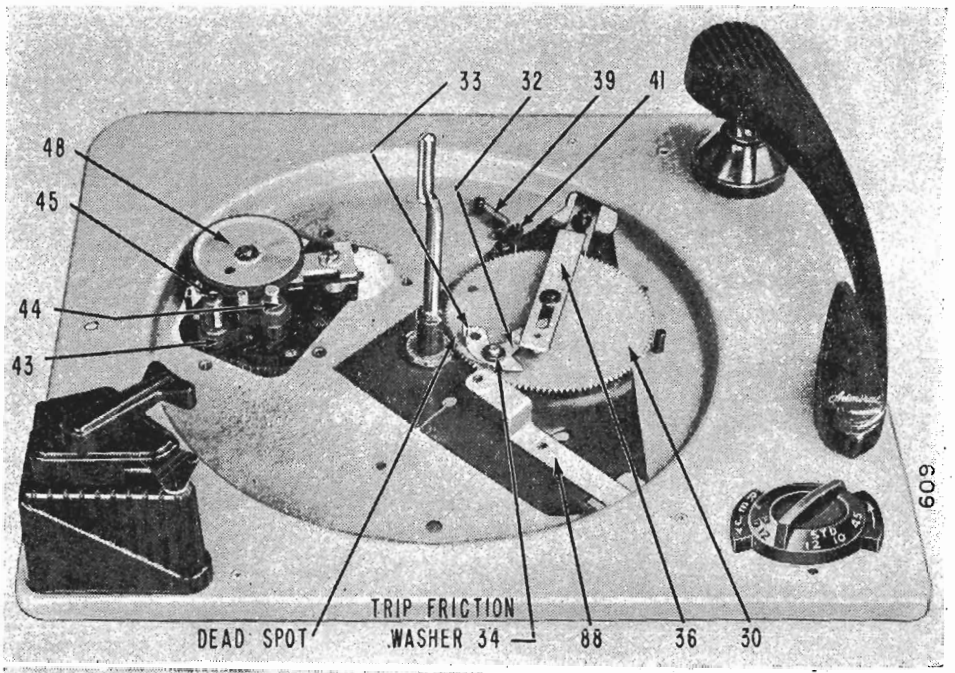

Fig. 3. RC550 Record Changer with Turntable Removed.

For Individual parts detail, see Figure 9, "RC550 Record Changer, Exploded View."

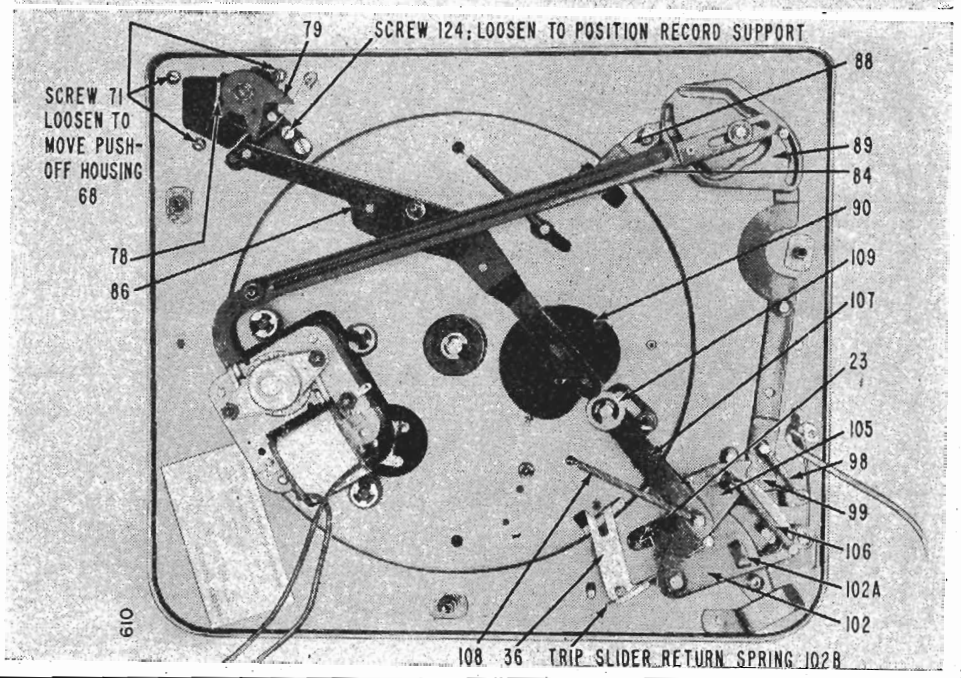

Fig. 4. RC550 Record Changer, Bottom View, Changer Out of Cycle.

©John F. Rider

Compliments of www.nucow.com

MODEL RC550

ADJUSTMENTS

When making the following adjustments, keep in mind that the Push-off, Trip, and Set-Down mechanisms function independently. One of these units may become inoperative without affecting the other two.

VELOCITY TRIP MECHANISM

This record changer uses a velocity type trip, which depends upon a rapid movement of the tone arm toward the centerpost in any area between 2 7/8″ to 7/8″ from the center of the record. **This trip requires no adjustment.** However, in order for the changer to trip properly, there must be sufficient friction between the trip motion arm (32) and the gear engagement pawl (33). If the friction is lost, a small amount of lubricant (such as lubriplate #110) should be placed between these parts. If this does not help, it may be necessary to replace the trip friction washer (34). See Figure 2A.

SET-DOWN ADJUSTMENT

Adjustment of the set-down point, is made by adjusting the set-down adjusting screw (6). See Figure 5. **The tone arm will automatically set-down properly on 7-inch or 12-inch records if the set-down adjustment is made properly on a 10-inch record.** The set-down adjusting screw is accessible through the hole in the right side of the tone arm. Turning this screw in moves the set-down point of the tone arm closer to the centerpost, and turning this screw out moves it away from the centerpost. Make this adjustment as follows:

1. Place the size and speed selector knob (26) in the "78-10" position.
2. Rotate the reject knob to the left momentarily. Then start to rotate the turntable clockwise by hand.
3. As the change cycle is almost completed, and the tone arm just starts to move down towards the turntable, place a ruler against the centerpost and check the distance between the near side of the centerpost and the needle. This distance should be between 4 10/16″ and 4 11/16″.
4. If the 10-inch adjustment is correct, the needle should set-down between 5 19/32″ and 5 22/32″ from the near side of the centerpost on 12-inch records, and between 3 1/4″ to 3 5/32″ on 7-inch records.

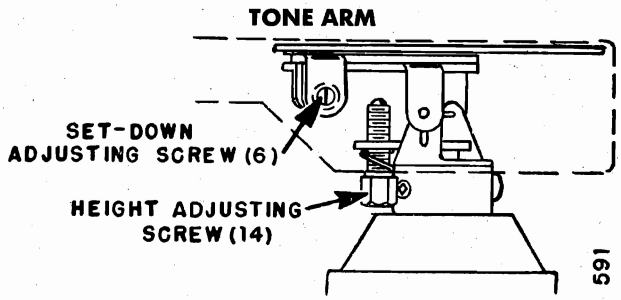

Figure 5. Set-Down and Height Adjustments.

ADJUSTING THE TONE ARM HEIGHT

This record changer is so designed that the tone arm will clear the bottom record of a stack to be played if the needle is 1/4″ above the changer pan when the changer is not in change cycle and 1 3/8″ above the turntable during change cycle. See Figure 6. With proper tone arm height setting, the tone arm will lift high enough during change cycle to clear a complete stack of records of any type on the turntable. This stack may consist of as many records as specified on page 1. Make this adjustment by placing the size and speed selector knob (26) in the "78-10" position, check the distance between the needle and the changer pan with the changer out of change cycle. If the needle is more than 1/4″ above the pan, turn the lift adjustment screw (14, Figure 5) counterclockwise; if less, turn clockwise.

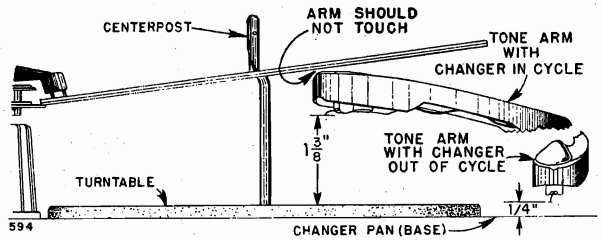

Figure 6. Checking Tone Arm Height.

POSITIONING RECORD SUPPORT (64)

If the record support is not positioned evenly under the bottom record of a stack to be played, one side of the record may drop to the turntable before the other. With the push-off assembly in the 10-inch position, place a 10-inch record over the upper portion of the centerpost so that the edge of the record fits against the edge of the record support (64). See figures 4 and 7. The contour of the record SHOULD follow the contour of the record support. If these contours do not match, position the push-off assembly as follows:

CAUTION: Be sure that the "testing" record has an even edge. For best results, try more than one record.

1. Loosen the screw (124) that holds the push-off positioning arm assembly (75) stationary.
2. Grip the push-off assembly and pivot it to the point where the edge of the record support "lines up" with the edge of the record.
3. Remove the record and tighten the screw (124).
4. Load the changer with a stack of 10-inch records, and "reject" the entire stack to the turntable. Check to see that all records drop to the turntable evenly.

©John F. Rider

Compliments of www.nucow.com

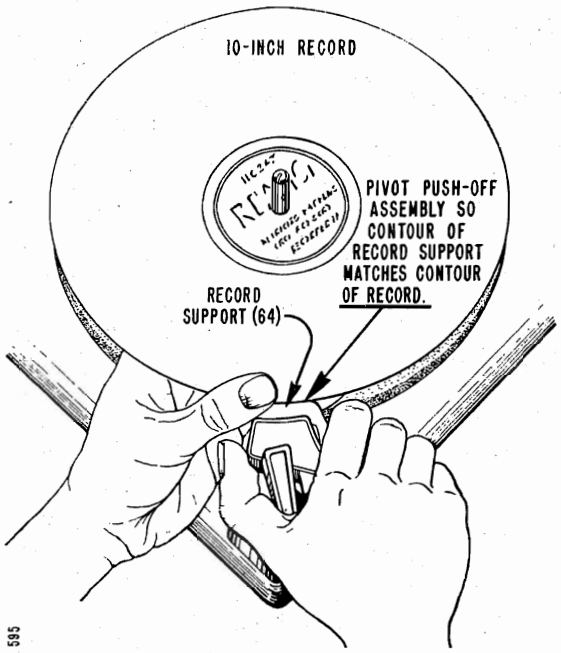

Figure 7. Positioning Record Support with 10-inch Record.

ADJUSTING DISTANCE BETWEEN RECORD SUPPORT (64) AND CENTERPOST (24)

If records do not push-off satisfactorily, or more than one record drops to the turntable during change cycle, it may be necessary to adjust the distance between the centerpost and the record support. See Figures 4 and 8. Make this adjustment as follows:

1. Place the push-off assembly in the 10-inch position.
2. Hold the centerpost as far away from the push-off assembly as possible.
3. Measure the distance from the edge of the record support (64) to the inside edge of the offset shelf on the centerpost. This distance should be between 4 29/32″ and 4 31/32″.
4. If it is necessary to adjust for this distance, loosen the three screws (71) holding the plastic push-off housing (68) to the changer pan. Then move the assembly until the specified distance is obtained.
5. Tighten the three screws, and recheck the distance. Place a stack of records (any size) on the changer, and "reject" each record in the stack to the turntable. Check to see that each record is pushed off satisfactorily. If one side of the record drops to the turntable before the other, it may be necessary to make the "Positioning Record Support (64)" adjustment.

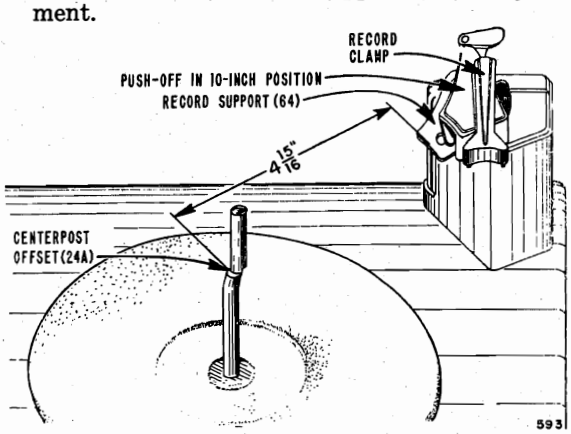

Figure 8. Checking Distance from Centerpost to Record Support.

SERVICE AND REPAIR

When reshipping Changer, be sure to place the Size and Speed Selector Knob in the "78-10" position.

LUBRICATION

DO NOT apply grease or oil to the trip slider (36). Also, under normal operating conditions, the motor should never require oiling.

Friction can sometimes be increased between the gear engagement pawl (33) and the trip motion arm (32), by placing a small amount of Lubriplate #110 between these two parts. Ordinary Vaseline can generally be used as a substitute for Lubriplate #110.

The rest of the changer should be lubricated with grease (such as Lubriplate #107) whenever it comes into the shop for repair or adjustment. A good automobile chassis grease can be used for this purpose. All pivot and friction points should be greased.

The powdered iron roller (109) and oilite bearings (used in the turntable hub and tone arm base) may be lubricated with SAE No. 20 oil.

Care should be taken to prevent any of the lubricant from coming into contact with the idler wheel tire, the rubber drive belts, or any of the rubber grommets. Also be careful, when using oil, that an excess does not seep into the felt of the turntable.

REMOVING AND REPLACING TURNTABLE

To remove the turntable, first remove the turntable retaining clip (51). Be sure that the changer is not in change cycle, and then, grasp the turntable by its edges and lift up. Before replacing the turntable, make sure that the changer is not in change cycle. The pickup arm should be positioned away from the turntable. In replacing the turntable, force is not needed to seat it. Make certain, however, that the idler wheel of the motor has been pushed in towards the centerpost and that the idler wheel is making contact with the inner side of the turntable flange. The idler wheel should be pushed in with a screwdriver or similar flat tool. Do NOT push toward the rear of the changer.

REPLACING SELECTOR CAM (89)

When replacing the selector cam (89), place the size and speed selector knob (26) so "STD-10" lines up with the indicating dot, hold the selector cam in the position shown in Figure 4, and install.

REPLACING CONTROL CAM (90)

Before replacing the control cam (90), be sure that the changer is out of change cycle. Place the control cam in the position shown in Figure 4, and install.

©John F. Rider

Compliments of www.nucow.com

MODEL RC550

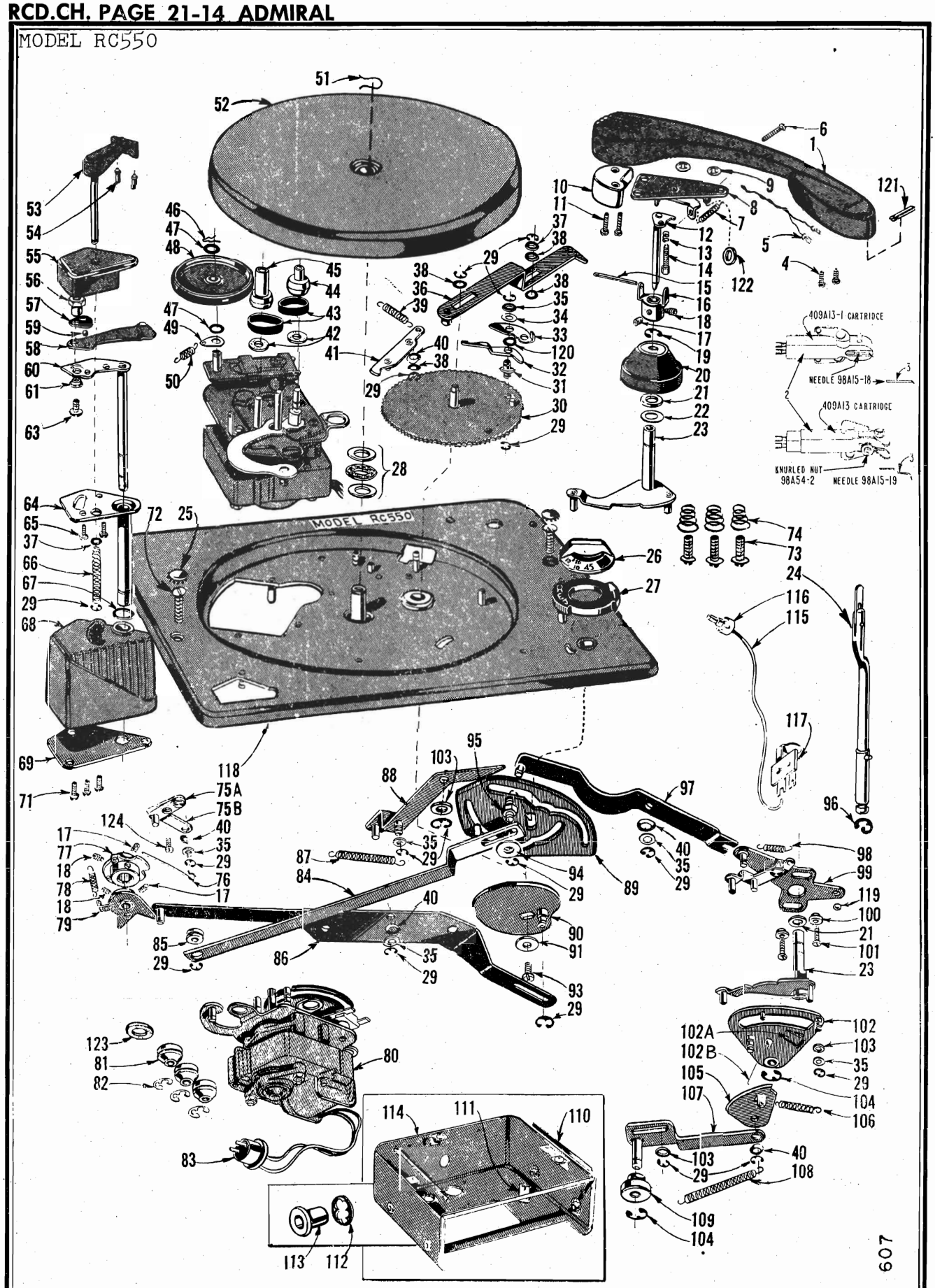

Figure 9. RC550 Record Changer, Exploded View.

©John F. Rider

Compliments of www.nucow.com

REPLACING THE PUSH-OFF INDEX PLATE (77)

Position the push-off index plate (77) as shown in figure 10. Be sure that the Allen screw **which is called out** "falls into" the milled slot.

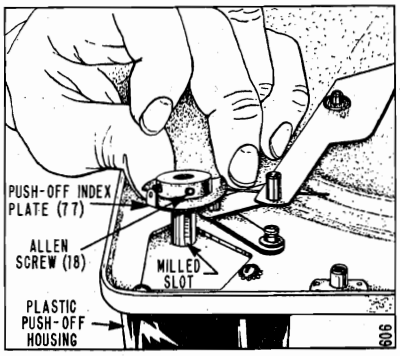

Figure 10. Installing Push-Off Index Plate.

REPLACING THE PUSH-OFF ARM (79)

Place push-off arm (79) over the push-off shaft so that the Allen screw **which is called out below** fits against the "flat section" of shaft.

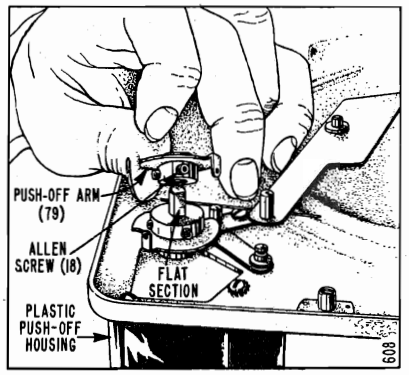

Figure 11. Installing Push-Off Arm.

RECORD CHANGER TROUBLE SHOOTING

Changer Will Not Trip.

1. Check to see that the trip slider (36) moves freely.
2. Apply small amount of grease between the trip motion arm (32) and the gear engagement pawl (33). See "Velocity Trip Mechanism" on page 4.
3. Check tension on trip friction washer (34). If necessary, replace with new washer.
4. Check for grease or oil on trip slider.
5. Check for broken, loose, or misplaced trip slider return spring (102B, Figure 4). It may have slipped over the stud on the slider.

Changer Repeatedly Trips into Change Cycle.

1. Check tension of gear indexing spring (39).
2. Check for bent trip slider return spring (102B, Figure 4).
3. Check for bent trip slider (36).

Tone Arm Does Not Set-Down Properly.

1. Check set-down adjustment. See "Set-Down Adjustment" on page 4.
2. Check to see that size and speed selector knob (26) has locked into position.
3. Check for broken, weak, or missing control plate return spring (108).

Tone Arm Skips Across Records.

1. Check to see that the cabinet is level.
2. Check for worn needle.
3. Check height adjustment. See page 4.

Changer Causes Rumble or Noise.

1. BE SURE that the shipping screws (72) on each side of changer pan have been removed.
2. Check for any mechanical rub near the 3-speed motor.
3. Check for broken float spring (74).

Records Do Not Push Off or More Than One Record Drops to the Turntable.

1. See "Adjusting Distance Between Record Support and Centerpost" on page 5.
2. Check for broken, missing, or weak push-off return spring (78). The push-off plate (60) may not be returning correctly.
3. Check to see that the push-off assembly is properly locked into position.
4. Check to see that no foreign material is between record support (64) and push-off plate (60).

Changer Trips Into Change Cycle Before Finishing Record.

1. Check for foreign material between trip motion arm (32) and engagement pawl (33).
2. Check for bent trip slider return spring (102B, Figure 4).
3. Check for bent trip slider (36).

Records Fall to Turntable Unevenly.

See "Positioning Record Support" on page 4.

Changer Stalls in Change Cycle.

1. Idler wheel (48) rubber tire may have foreign material on it. Try cleaning it with carbon tetrachloride solution.
2. Motor drive belts (43) may be slipping. If necessary, replace with new belts.
3. Be sure push-off assembly locks in position.

CAUTIONS

1. See that the rubber tire on the idler wheel (48), and both drive belts are kept clean from oil, grease, dirt or any foreign material. Carbona or carbon tetrachloride may be used for cleaning these parts. When handling these parts, keep fingers and hands away from the driving surface. Natural body oils may cause slippage.
2. Always move the size and speed selector knob (26) control until it makes a definite stop and locks into position. Erratic action will result if this is not done.
3. Be sure that the shipping screws (72) on each side of the changer pan are removed. Noise will result from any mechanical vibration, resulting in a rumble in the speaker.

©John F. Rider

Compliments of www.nucow.com

MODEL RC550

RC550 PARTS LIST

Ref. No.	Part No.	Description
1	403C51	Tone Arm (Maroon)
	403C51 G	Tone Arm (Gold)
2	409A13-1	Pickup Cartridge with needle (push-in type)
	409A13	Pickup Cartridge with needle and knurled nut
		Cartridges (with needle) are interchangeable
	98A54-2	Knurled Nut (for 409A13 Cartridge)
3	98A15-18	Needle for 409A13-1 Cartridge
	98A15-19	Needle for 409A13 Cartridge
4	1A72-1-20	Cartridge Mtg. Screw Shakeproof type 25 (2 req.)
5	G400A529	Tone Arm Lead and Pin Jack Assembly
6	45-750-C2-47	Set-Down Adjusting Screw, #4-40x¾ BH MS
7	405A137	Set-Down Adjusting Lock Spring
8	G400A526	Tone Arm Mtg. and Pivot Plate Assembly
9	2B10-5-59	Speed Nut (2 req.)
10	404A31	Tone Arm Counterweight
11	1A70-6-20	Counterweight Retaining Screws, #4 x ⅝" (2 req.)
12	G400A520	Lift Rod and Plate Assembly
13	405A120	Lift Adjusting Spring
14	402A245	Lift Adjusting Screw
15	414A43	Pivot Shaft
16	G400A525	Tone Arm Support and Hub (includes set screws)
17	1A43-14	Allen Set Screw, #8-32x3/16" (3 req.)
18	402A247	Allen Set Screw, #8-32x¼" (3 req.)
19	401A355-3	Retaining Ring
20	403A52	Tone Arm Plastic Base (Maroon)
	403A52 G	Tone Arm Plastic Base (Gold)
21	401A358	Spacer Washer
22	401A284	Bronze Washer (.316 x 15/32 x .005)
23	G400A542	Arm Control Lever and Shaft Assembly
24	G400B505-1	Centerpost
25	13A2-8-57	Snap-in Buttons
26	403A59	Size and Speed Selector Knob (Maroon)
	403A59G	Size and Speed Selector Knob (Gold)
27	G400A582	Reject Knob (Maroon)
	G400A582G	Reject Knob (God)
28	415A11	Thrust Bearing
29	401A355-1	Retaining Ring
30	G400A532	Drive Gear and Stud Assembly
31	402A229	Trip Pivot Stud
32	401A351-1	Trip Motion Arm
33	401A352	Gear Engagement Pawl
34	401A353	Trip Friction Washer
35	4B1-68-47	Washer (5 req.)
36	G400A575	Trip Slider
37	4B1-67-47	Washer (.196 x 5/16 x 1/32)
38	4B2-178-0	Washer (.196 x ⅜ x 1/64)
39	405A134	Gear Indexing Spring
40	405A22	Spring Washer
41	G400A549	Gear Indexing Arm and Stud Assembly
42	98A15-9	Oil Retaining Felt Washer (2 req.)
43	406A20	Drive Belt (2 req.)
44	98A15-11	45 RPM Drive Shaft (60 cycles)
45	98A15-10	33 RPM Drive Shaft (60 cycles)
46	405A15	Idler Wheel Retaining Clip
47	412A30	Fibre Washer (2 req.)
48	G400A279	Idler Wheel Assembly
49	98A15-21	Idler Wheel Tie Lug
50	98A15-20	Idler Wheel Spring
51	414A36	Turntable Retaining Clip
52	G400B507	Turntable
53	G400A511	Record Clamp and Shaft and Rubber Tips (Maroon)
	G400A511 G	Record Clamp and Shaft and Rubber Tips (Gold)
54	406A25	Record Clamp Rubber Tip (2 req.)
55	403B53	Push-off Plastic Cap (Maroon)
	403B53 G	Push-off Plastic Cap (Gold)
56	402A249	Push-off Plate Nut
57	401A326	7" Record Support Detent Spring
58	G400A510	7" Record Support
59	415A28-1	Ball Bearing (⅛" diameter)
60	G400A509	Push-off Plate and Shaft Assembly
61	402A250	Spacer Washer
63	402A262	Screw, #4-40x5/16 BH MS (includes lockwasher)
64	G400A508	Record Support and Tube Assembly
65	1A72-2-20	Screw, Shakeproof type 25 (# 4 x 5/16")
66	405A136	Record Clamp Spring
67	4B1-158-47	Washer (.390 x 9/10 x 1/32)
68	403C50	Push-off Housing (Maroon)
	403C50G	Push-off Housing (Gold)
69	401A346	Housing Bottom Plate
71	402A263	Plastiscrew, #6x5/8 R.H. (includes lock washer)
72	402A258	"Hold Down" Screw, #10-32 x 1¼" (for shipping only)
73	AA210	Mounting Screw and Washer (table models only)
74	405A139	Float Spring (3 req.)
75	G400A565	Push-off Positioning Arm Assembly
76	414A40	Push-off Indexing Spring
77	G400A514	Push-off Index Plate and Hub Assembly
		See "Replacing The Push-Off Index Plate (77)" on page 8.
78	405A133	Push-off Return Spring
79	G400A517	Push-off Arm and Hub Assembly (includes Allen screw)
		See "Replacing The Push-Off Arm (79)" on page 8.
80	*407B19	*3-Speed Motor Complete, 60 cycle, 117 volts
81	406A19	Motor Mounting Grommet (3 req.)
82	401A355-4	Motor Mtg. Retaining Ring (3 req.)
83	88A8-1	Phono Motor Plug
84	G400A580	Motor Shift Link (includes rubber grommet)
85	406A24	Speed Change Link Grommet
86	G400A562	Push-off Link and Stud Assembly
87	405A140	Reject Return Spring
88	G400A581	Reject Arm and Stud Assembly
89	401B365	Selector Cam (When replacing, see "Replacing Selector Cam (89)" on page 5.)
90	G400A548	Control Cam and Stud Assembly
		See "Replacing Control Cam (90)" on page 5.
91	401A145	Control Cam Washer
93	402A265	Screw, #8/32x⅜" BH (includes lock washer)
94	4B1-78-47	Washer (.196x½x1/6)
95	402A254	Selector Cam Stud
96	401A355-3	Centerpost Retaining Ring
97	G400A579	Set-Down Change Lever
98	405A130	Set-Down Spring
99	G400A546	Set-Down Change Plate and Arm Assembly
100	402A238	Spacer
101	1A70-11-20	Plastiscrew, # 6 x 7/16"
102	G400A537	Control Plate Assembly
103	401A173	Washer
104	401A355-2	Retaining Ring
105	401A345	Safety Arm
106	405A131	Safety Spring
107	G400A538	Drive Link and Stud Assembly
108	405A132	Control Plate Return Spring
109	415A27	Drive Link Roller
110	403A38-1	Plastic Trim (2 req.)
111	32A88	Antenna Lead Support
112	2B10-10-59	Speed Nut (4 req.)
113	27A24	Bottom Cover Bushing (4 req.)
114		Bottom cover
115	413A11-1	Shielded Cable (includes plug, 15")
116	88A2-3	Plug (for lead-in cable)
117	10B1-18	Terminal Board
118		Changer Pan
119	415A28-2	Ball Bearing (5/32 diameter)
120	412A36	Fibre Washer (.196 x ⅜" x .005)
121	414A45	Tone Arm Weight
122	4B1-19-47	Washer (.125 x ¼ x 1/32 Steel)
123	412A38	Motor Mounting Washer
124	402A264	Screw, #6-32 x 3/16" BH

PARTS FOR CONVERTING 407B19 MOTOR TO 50 CYCLE

45 RPM Drive Shaft (50 cycles) 98A15-15
78 RPM Drive Shaft Spring (50 cycles) 405A113
33 RPM Drive Shaft Spring (50 cycles) 405A112

*407B19 motor is not used on "Canadian Admiral" changers. For Canadian Admiral replacement motors order:
60 cycle, 105 to 125 volts 407X19-60
25 cycle, 105 to 125 volts 407X19-25

© John F. Rider

Compliments of www.nucow.com

GENERAL

This single post and single tone arm record changer is designed for dual speed operation (33⅓ or 78 revolutions per minute) from a power source of 110 volts at 60 cycles. It will play the Standard Groove or Microgroove type records for these speeds, a single record at a time or a series of twelve 10-inch or ten 12-inch records. *Note: Never stack together the Standard and Microgroove records intermixed for automatic operation* as playing of each type record requires special attention to the pickup discussed below.

The tone arm is designed to use either of two pickup heads which are interchanged by a plug arrangement at the end of the tone arm. The pickup heads are finished in color for identification. The TAN head is used to play Standard Groove records while the RED colored head is for Microgroove reproduction. *Always use the TAN head with Standard Groove records and the RED head with Microgroove records.* Use of the wrong head is certain to result in damage to records and pickup stylus.

RECORD PLAYER OPERATION

TO PLAY STANDARD RECORDS (78 RPM) 10-INCH OR 12-INCH—Rotate speed change switch to Std Play and plug the standard pickup cartridge (tan) into the pickup arm. The record player may then be operated manually or automatically, as outlined below, for either 10-inch or 12-inch records.

TO PLAY LONG PLAYING (MICROGROOVE 33⅓ RPM) RECORDS 10-INCH OR 12-INCH—Rotate the speed change switch to Long Play and plug the microgroove pickup (red) into the pickup arm. The record player may then be operated manually or automatically as outlined below for either 10-inch or 12-inch records.

TO PLAY 33⅓ RPM STANDARD GROOVE RECORDS—Rotate the speed change switch to Long Play and plug the standard pickup cartridge (tan) into the pickup arm. The record player may then be operated manually or automatically as outlined below for either 10-inch or 12-inch records.

CAUTION—To avoid damage to the pickup stylus and to the record surfaces, do not allow the standard pickup cartridge to be used on the microgroove records. Do not drop the pickup arm onto the record.

To prevent depressions, which cause "WOW" and poor reproduction, from forming in the rubber drive wheel always return the speed change knob to the neutral or center position.

MANUAL OPERATION

Raise the *hinged shelf* for 10-inch records and the *hold-down arm* into a vertical position. Slip the record down over the *spindle* onto the turntable. Turn the record mechanism *control knob* to the MANUAL position. This will start the turntable rotating. Gently lower the tone arm on the first groove of the record. When the record is through playing, return the tone arm by hand to its rest position. Stop turntable rotation by turning *control knob* to OFF position. When through playing phonograph, turn the Phono-Radio control to its OFF position.

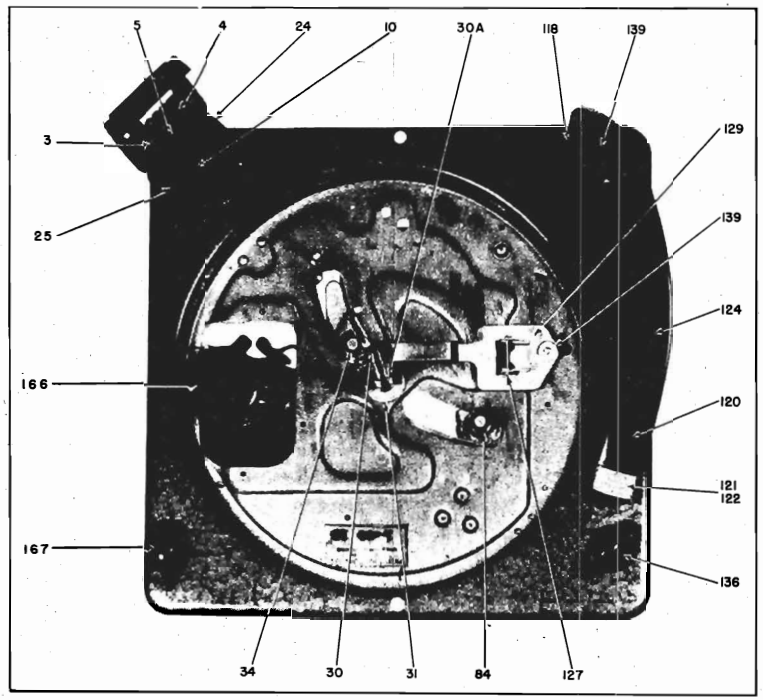

Fig. 1. Top View of Record Changer

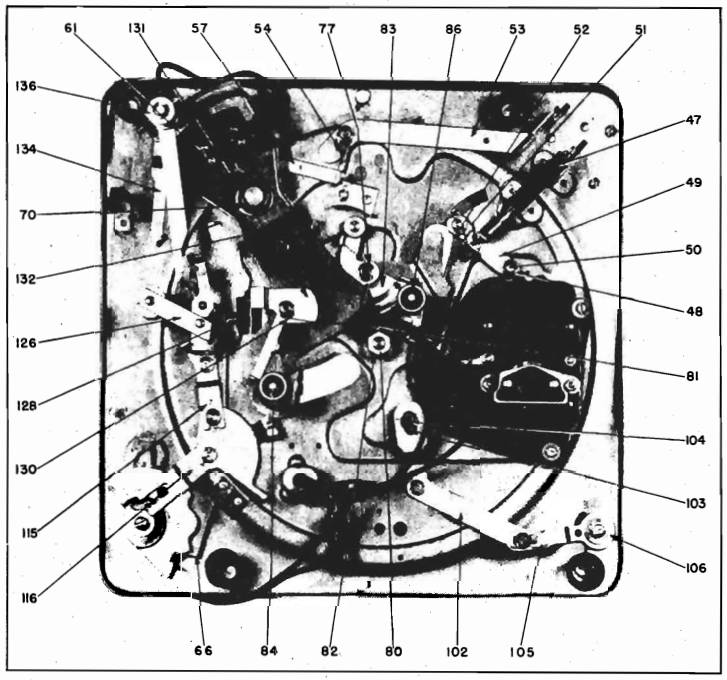

Fig. 2. Bottom View

©John F. Rider
Compliments of www.nucow.com

MODEL P13

AUTOMATIC OPERATION

Before placing records on the changer make sure the tone arm is placed on its rest. The *hold-down arm* should be in a vertical position to permit stacking of records. If 10-inch records are to be played, lower *hinged shelf* for 10-inch records to horizontal position. For 12-inch records raise the *hinged shelf* for 10-inch records into a vertical position, and rest the records on the *shelf* for 12-inch records. Place stack not to exceed twelve 10-inch or ten 12-inch records over *spindle* supported in the center on the record shelf of spindle, and at one side by the shelf for 10-inch or 12-inch records as the case may be. Place the *hold-down arm* to rest on the top record of the stack to be played. This steadies the records and assures correct dropping of records. Do not intermix 10-inch and 12-inch records.

Turn the phono *control knob* to REJECT position and release it. The changer will now play the entire stack and repeat the last record. To shut off phonograph before or after all records are played, turn *control knob* to OFF and lift tone arm and move it out to the rest position.

If you wish to reject a record before it has finished playing, turn the *control knob* to REJECT and release it. The changer will reject the record and then continue to play the remainder of the stack.

Before removing records, it is advisable to drop all unplayed records onto turntable by repeatedly turning *control knob* to REJECT position. After last record has dropped down on turntable, lift the tone arm and place it on its rest while the turntable and records are rotating. Turn *control knob* to OFF position. Raise *hold-down arm* and *shelf* for 10-inch records into vertical position. Lift records from turntable. If through operating the phonograph, turn the Phono-Radio control to OFF position.

PICKUP CARTRIDGE

The Model P13 record changer is equipped with two pickup arm cartridge heads, each containing a General Electric Variable Reluctance Cartridge incorporating a replaceable stylus assembly. The "TAN" colored head is plugged into the end of the pickup arm to play wide groove records known as the Standard type. The "RED" colored head is similarly inserted into the arm when using the Long Playing Microgroove records.

SERVICE—The stylus assemblies may be removed readily from the cartridge for replacement. Instructions for replacement are supplied with each new Replaceable Stylus Assembly catalogued in the replacement parts lists on the last page of this publication.

To insure optimum performance from the cartridge, its stylus, magnetic pole pieces, and gaps should be cleaned periodically of foreign particles accumulated from the record surfaces. A soft bristle brush similar to Cat. No. RQB-001 should be used to clean these parts. The gap clearance between stylus and each of its pole pieces has been adjusted to be not less than .011 inch. Care should be taken not to disturb this adjustment during service adjustment or cleaning.

OPERATING PRECAUTIONS

1. Do not, under any circumstances, connect the motor to a source of direct current or to alternating current other than that specified by the label.

2. Do not allow oil or grease to come in contact with the rubber tired friction drive wheels (166) or the Velocity Trip Arm friction washers, part of item (134).

3. Never use force to start or stop the motor, or any part of the record changer mechanism.

4. Do not intermix Microgroove records with the Standard Groove type.

5. Make certain the correct pickup head is used to play the desired records. The TAN head (121) is for Standard Groove recordings, while the RED head (122) is used to reproduce Microgroove recordings.

6. Always make certain that the Speed Control is set to the proper speed position as required for the type of record.

7. Use only records in good condition for automatic operation. For warped, odd size, or home recorded records, play as for manual operation.

8. Do not store the records upon the record post and spindle or on the turntable as they may warp, especially if the temperature is high.

9. When through operating the record changer, make certain the Speed Control (167) is returned to the "OFF" position. This prevents a damaging flat surface upon the rubber tired drive wheels otherwise developed as the motor drive shaft bears pressure upon them when the record changer remains idle for long periods engaged in either of the speed positions.

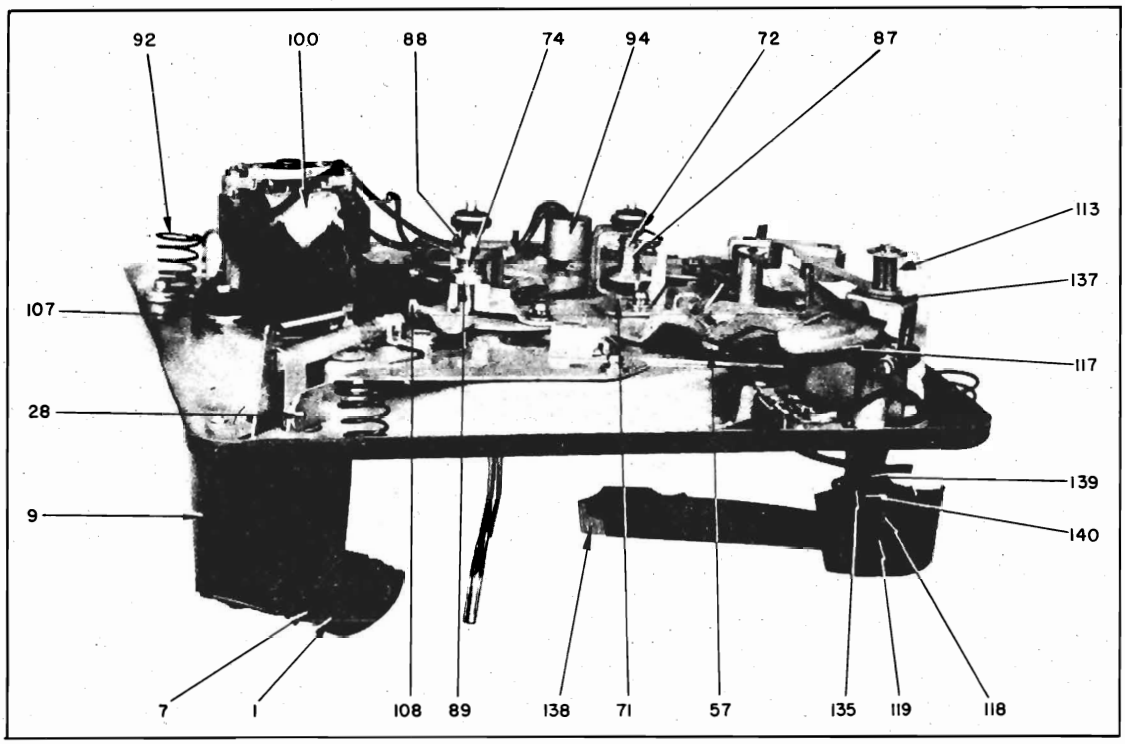

Fig. 3. Bottom View

©John F. Rider

Compliments of www.nucow.com

CYCLE OF AUTOMATIC OPERATION

The following titled paragraphs describe in sequence each action of the record changer mechanism through the automatic cycle of operation.

INITIATING THE CHANGE CYCLE—Rotate the control knob (136) to auto position. This action closes switch and starts motor which turns the turntable. Rotating the control button to reject causes reject control link lever (115) to strike velocity trip lever (126) whose trip dog trips lead pin drop lever (131) from under swing plate lead pin (34). The lead pin (34) is pushed upward by compression spring (87) and engages the spiral on bottom side of turntable. As the turntable rotates, the spiral moves the lead roller (34) towards the center spindle, causing the swing arm (132) to rotate on its pivot.

PICKUP ARM MOVEMENT—The swing plate assembly (132) operates the pickup arm lift pin, thus raising and lowering the pickup arm. The swing plate assembly (132) also engages the velocity trip arm (134) through the swing plate friction spring (61), causing the pickup arm to move into its proper position in the change of cycle. The brake spring (81) assures a gentle lowering of the pickup arm onto the record. The swing arm then moves free of the velocity trip arm (34), allowing free action of the pickup arm.

RECORD FEED—As swing arm (132) approaches the end of the first half of its cycle, it comes in contact with and pushes the lever bearing washer and ejector idler lever (49). This lever, in turn, pushes the ejector push pin which moves the ejector lever (28) to operate either 10-inch or 12-inch record push-off plate, pushing off 10-inch or 12-inch records respectively.

PICKUP ARM INDEXING—The index of the pickup arm is set for 10-inch or 12-inch records by the position of the 10-inch record support (3) which controls the index change lever (53). The change lever (53) operates the pickup arm swing index lever (57).

COMPLETING CHANGE CYCLE—At the end of the first half of cycle, the dropping lever (83) contacts the lever trip bracket and allows the return cam and pin (89) to rise into the outer turn of the spiral on the under side of the turntable. At the same time, the lead cam and pin (71) is pushed out of the spiral by the cam at the center of the turntable and is locked out of the spiral by the lead roller drop lever (131). The turntable continues to rotate and the swing arm returns, and the return pin is pushed out of the turntable spiral and locked into that position by the return pin lock lever (83) completing the change of cycle.

AUTOMATIC TRIP—After the record has been played, the pickup stylus (121) follows the eccentric record grooves toward the spindle. The change in velocity of the pickup arm (124) at this point also causes a change in velocity of the velocity trip lever (126) which is coupled to it through a spring friction drive. At this velocity, enough striking pressure is brought to bear upon the velocity trip lever (126) by the trip lever, causing the upper velocity trip lever assembly (129) to be brought closer to the center of turntable. The revolving cam on the underside and center of the turntable carries the upper assembly of the velocity trip lever (129) to a position where the trip lever trip dog on item (129) triggers the lead pin drop lever (131) from under lead pin cam. The lead pin then drops into position, engaging spiral cam of turntable to start a new change cycle.

SERVICE ADJUSTMENTS

1. PICKUP ARM DROP POINT ADJUSTMENT:

(*A*) With the control knob in the off position, rotate turntable until swing arm (132) allows index swing arm lever (57) to move into position to contact index arm. Loosen index arm screw and move tone arm so that needle lands approximately ⅛ inch from edge of record. Tighten screw on index lever. Note 10-inch record support (3) should be horizontal for 10-inch indexing adjustment.
(*B*) Index arm lever spring (54) should actuate index arm lever (57) as swing arm moves through its cycle.

2. RECORD SUPPORT POST ADJUSTMENT:

Trip changer and rotate turntable by hand until the swing arm has completed the first half of its cycle.
(*A*) Adjust screw (52) so that 12-inch push-off slide plate (10) extends ⅜″ past the ears of the record support post.
(*B*) If 10-inch records fail to drop, check to see if the 10-inch record support (3) rests on the edge of the record support post and not on the 12-inch push-off slide plate.
(*C*) Either 10- or 12-inch records fail to drop. Check to see that ejector arm spring (47) returns. Lower push pin and ejector lever (28) to the neutral position.

3. AUTOMATIC TRIP:

(*A*) Friction parts of the automatic trip arm (part of item 134) should be kept free of grease or oil. Clean if necessary with carbon-tetrachloride, or equivalent solvent.
(*B*) If mechanism fails to trip, it may be necessary to stretch spring (113) to increase friction of automatic trip arm.
(*C*) Make certain the automatic trip arm is aligned to strike the arm of the automatic trip lever assembly (126). Bend arm slightly if necessary.

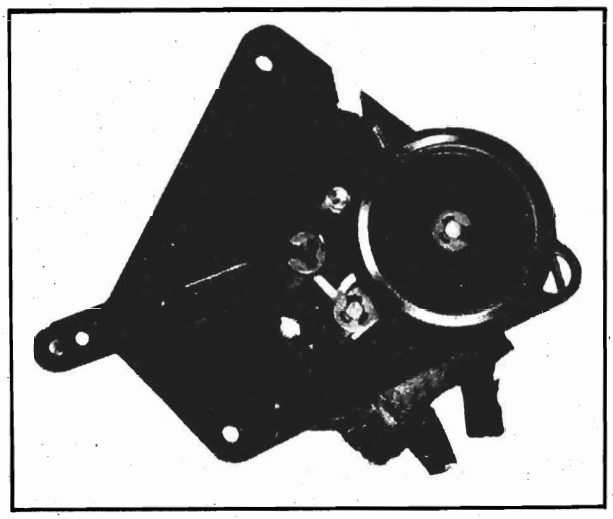

Fig. 4. RBH-011

Two-speed phono motor with idler wheel switching cam

LUBRICATION

Use Lubriplate, or equivalent, on the following:

1. Ten-inch record push-off plate (4) and 12-inch record push-off plate (10).
2. Cam swing plate lead and return pin at bottom of items 72-88.
3. On slide bolt operated by item (49).

Use Millicott 70K, or equivalent, on the following:

1. On edges of slots where swing arm clamps, slide on mounting plate.
2. Sloping edge of cammed dropping lever assembly (83).
3. Between friction washer at bottom of item (132).
4. Lever bearing washer (48). Part of item (49).
5. Ejector idler lever pivot pin on item (49).
6. Cammed dropping lever roller and pivot pin (83).
7. Index arm lever pivot pin (57).
8. Change lever fulcrum pin and slide washer (53).
9. Guides at bottom turntable (125).

©John F. Rider

Compliments of www.nucow.com

TROUBLE SHOOTING CHART

SYMPTOMS	REMEDIES OR CAUSES
RECORD SELECTION:	
1. Records fail to drop.	1. Check adjustments 2A, 2B, 2C, 3A, 3B and 3C.
2. More than one record drops.	2. Check slider at top of spindle.
TONE ARM MOVEMENT:	
1. Tone Arm lands incorrectly.	1. Check adjustment 1A and 1B.
2. Tone Arm descends onto record too fast.	2. Check friction brake spring (81) (spring may be too weak to slow swing arm at end of cycle).
3. Does not lower onto record.	3. Check adjustment of acorn nut top of tone arm lift pin. Check end of swing plate, see that it is not bent.
TRIPPING AND CYCLING:	
1. Changer fails to trip.	1. Check adjustment 3A, 3B, 3C.
2. Changer changes too soon.	2. Check adjustment 3A.
3. Changer trips continuously.	3. Check selector lever spring (66).
4. Changer fails to cycle after tripping.	4. Adjustment (3B).
5. Changer jams at start of the change cycle.	5. Check to see that return roller (34) is held out of turntable spiral by cammed dropping lever (83) and cammed dropping lever spring (77).
6. Changer jams in the last half of change cycle.	6. Check to see that dropping lever torsion spring (77) is strong enough to actuate dropping lever (83) to prevent lead roller from re-entering the spiral on second-half of changer cycle.
7. Changer action is sluggish or fails to trip.	7. Check lubrication.
MOTOR:	
1. Changer is sluggish or motor overheats.	1. (a) Check lubrication, oil old or gummy. (b) Incorrect line voltage. (c) Defective motor.
2. Motor rumble heard in record reproduction.	2. (a) Shipping bolts not removed from motor board. (b) Flat spot on idler wheel (166).

Cat. No.	Item	Description
RAP-015	120	COVER PLATE—Aluminum retainer cover for pickup head receptacle
RBH-011	100	MOTOR—Two-speed phono motor assembly
RDK-128	36,167	CONTROL KNOB—"Off-Manual-Auto-Reject" or motor speed control knob
RHG-023	103	GROMMET—For motor speed lever
RHJ-008	82	SPACER—Spacing collar for record spindle
RHM-044	84	ROLLER BEARING SPEED NUT—Holds item 34
RHM-045	86	WASHER—Rubber cushion for item 34
RHN-007	80	NUT—Record spindle mounting nut
RHW-020	136	WASHER—Square center steel washer in velocity trip arm assembly
RHW-021	137	WASHER—Velocity trip arm friction washer (round hole)
RJP-003		PLUG—110 volt, two prong male plug
RMA-003	1	RECORD STABILIZER WEIGHT
RMA-007	116	LEVER PLATE—"Off-Manual-Auto-Reject" lever plate
RMB-014	34	PIN AND ROLLER—Swing plate lead or return pin
RMB-016	140	BUSHING—Centers pickup arm spring with pickup arm lift pin
RMB-017	139	BALL BEARINGS—3/32-inch diameter, set of 15 used in tone arm pivot, one used in assembling item
RME-001	9	EJECTOR MECHANISM HOUSING—Cast metal case
RML-027	115	LINK LEVER—Reject control lever (linked to item RMA-007)
RML-028	126	VELOCITY TRIP LEVER—Lower assembly consists of: lever flat spring stop, balanced fulcrum, and pivot pin
RML-029	129	VELOCITY TRIP LEVER—Upper assembly consists of: lever, trip dog, and trip dog pin
RML-030	131	DROP LEVER—Operates lead pin and roller, item 134
RMM-062	3	SUPPORT—10-inch record support
RMM-063	31	WASHER—Re-inforcement washer beneath spindle
RMM-064	48	BRASS WASHER—Lever bearing washer for item 49
RMM-065	71	CAM—Swing plate lead pin locking cam
RMM-066	72,88	SPACER—For item 34
RMM-067	89	CAM—Swing plate return pin locking cam
RMM-069	4	10-INCH RECORD—Push-off plate
RMM-070	8	HINGE BRACKET—For items 1 and 3
RMM-071	10	12-INCH RECORD—Push-off plate
RMM-072	53	INDEX LEVER—Index change control lever
RMM-073	57	LEVER—Indexes pickup arm swing lever (134)
RMM-076		WASHER—Slide washer (beneath item RMM-077)
RMM-077		PIN—Lever fulcrum pin fastens item 53
RMM-080		PIN—Record changer deck lever fulcrum pin (part of item 57)
RMM-108	102	LEVER—Motor speed lever
RMM-109	104	"C" WASHER—"ON" motor speed lever, velocity trip, idler wheel, and idler wheel linkage
RMM-110	105	LEVER—Motor speed change lever
RMM-111	106	WASHER—Friction washer
RMM-112	107	SPACER—Thin motor spacer
RMM-113	108	SPACER—Thick motor spacer
RMM-122	128	TRIP DOG—Part of item RML-029 (trips item 131, RML-030)
RMP-012	7	PIN—Hinge pin for item 8
RMP-016	50	PIN LEVER—Lever fulcrum pin for item 49
RMP-019	117	PICKUP ARM LIFT PIN
RMP-020	118	PICKUP ARM HINGE PIN
RMP-022	127	PIN—Hinge pin for trip dog (part of item RML-029)
RMS-131	5	SPRING—Ejector compression spring for 10-inch record push-off plate
RMS-133	24	SPRING—Balance arm spring for record stabilizer weight
RMS-134	25	SPRING—For 10-inch record support
RMS-135	30A	WASHER—Friction washer for record spindle
RMS-136	47	SPRING—Ejector arm extension spring
RMS-137	54	SPRING—Lever spring for item 53
RMS-138	61	SPRING—Friction spring on swing plate
RMS-139	70	RING—Engages item 13A for swing plate assembly
RMS-140	74,87	SPRING—Compression spring on item 34
RMS-142	79	SPRING—Cammed dropping lever tension spring on item 83
RMS-143	81	SPRING—Friction brake spring
RMS-144	92	SPRING—Mounting springs on main plate
RMS-146	66	SPRING—Selector lever index spring
RMS-185	119	SPRING—Pickup arm spring
RMS-187	130	SPRING—Used with drop lever, item 131, RML-030
RMS-188	133	SPRING—Velocity trip arm spring
RMT-016	125	TURNTABLE
RMU-040	30	RECORD SPINDLE ASSEMBLY
RMW-057	166	IDLER WHEEL
RMX-111	28	EJECTOR PIVOT CHANNEL SUB-ASSEMBLY
RMX-112	49	LEVER ASSEMBLY—Ejector idler lever assembly, including items 51 and 52
RMX-114	83	LEVER—Drop lever assembly for swing plate return pin
RMX-142	132	SWING PLATE ASSEMBLY—Operates pickup arm swing lever, item 34, and ejector idler lever, item 49 (assembly includes all attached parts)
RMX-143	134	LEVER AND VELOCITY TRIP ARM—Pickup arm swing lever and velocity trip arm assembly
RMX-144	135	PIVOT POST—Pickup arm pivot post with hinge bracket
RPA-011	124	PICKUP ARM—Pickup arm shell with leads and pickup receptacle
RPH-009	121	STANDARD PICKUP HEAD ASSEMBLY—Tan colored die cast head, complete with male connector
RPH-010	122	LONG-PLAY PICKUP HEAD ASSEMBLY—Red colored die cast head, complete with male connector
RPX-040	15	PICKUP CARTRIDGE—Includes 3 mil sapphire replaceable stylus, RPJ-001
RPX-041	114	PICKUP CARTRIDGE—Includes 1 mil sapphire replaceable stylus, RPJ-005
RSW-052	94	SWITCH—Phono motor switch
RWP-004	138	BALLAST WEIGHT—Used in tan pick-up head only

© John F. Rider
Compliments of www.nucow.com

MODEL P14

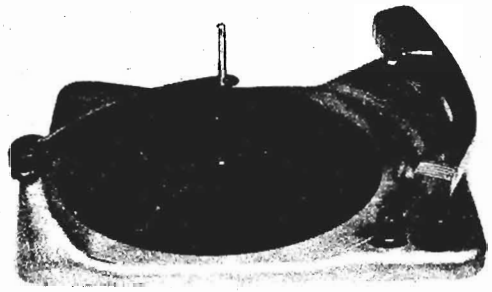

GENERAL.

The Model P14 is a three-speed record changer for playing records of 33⅓ rpm, 45 rpm or 78 rpm with either standard grooves, wide grooves or narrow grooves (microgrooves). The changer has two plug-in heads to change from 1 mil pickup for playing narrow groove records to a 3 mil pickup for playing standard or wide groove records. The 1 mil head has a red color, while the 3 mil head has a brown color. The record changer will play automatically 10- and 12-inch, 33⅓ rpm or 78 rpm records intermixed and automatically 7-inch 45 rpm or 33⅓ rpm records.

INSTALLATION—The record player is designed to operate from a 110–120 volt, 60 cycle per second power supply.

Mounting screws are supplied with the record changer to hold it secure during shipment. These screws are located on the plate under the turntable. The mounting screws should be turned clockwise to allow the record changer to float freely on its grommets. Before the turntable can be fully seated, the drive wheel (124) must be gently pushed back out of the way to prevent damage to the rubber tire. In case of reshipment of the receiver, these screws should be turned counterclockwise to draw the changer base plate down firmly against the mounting board. Do not remove these mounting screws.

LEVELING RECORD CHANGER—It is important to check that the record changer is absolutely level. Use a torpedo or similar type level on the record changer baseplate. Use adequate shims to level the record changer pan or radio combination cabinet to obtain perfect level. If changer is used for a new installation consult Fig. 7 for motorboard cutout, etc.

OPERATION.

TO PLAY A SINGLE RECORD—(See Fig. 1.) To play single records or home recordings, lift up the record support (1) and move it counterclockwise out of the way. Place the record on the spindle and lower to the spindle shelf. Tilt the record down towards the rear of the tone arm and lower the record to the turntable. Place the proper pickup head into the pickup arm (brown for standard groove records, or red for microgroove records). Turn the Control Knob (34) to proper speed position. Turn the Control Knob (42) to "ON" position, and trip the Index Trigger (14) on the rear inside of the Pickup Arm. Place Pickup Arm on the record with the stylus in the leading groove of the record. Then replace record support (1) over spindle.

TO PLAY 10-INCH AND 12-INCH RECORDS (78 RPM AND 33⅓ RPM) AUTOMATICALLY—Lift the record support and rotate until pin drops into locating groove. Place ten 12-inch or twelve 10-inch records, or ten 10-inch and 12-inch records intermixed over the spindle and lower to the offset shelf.

(*Note:* Standard and long-play or microgroove (78 rpm) and fine-groove (45 rpm) records cannot be intermixed for automatic operation, as a different type of stylus has to be used for each type of record.)

Hold records level and place record support over spindle. Plug in the proper head into the pickup arm (brown for standard

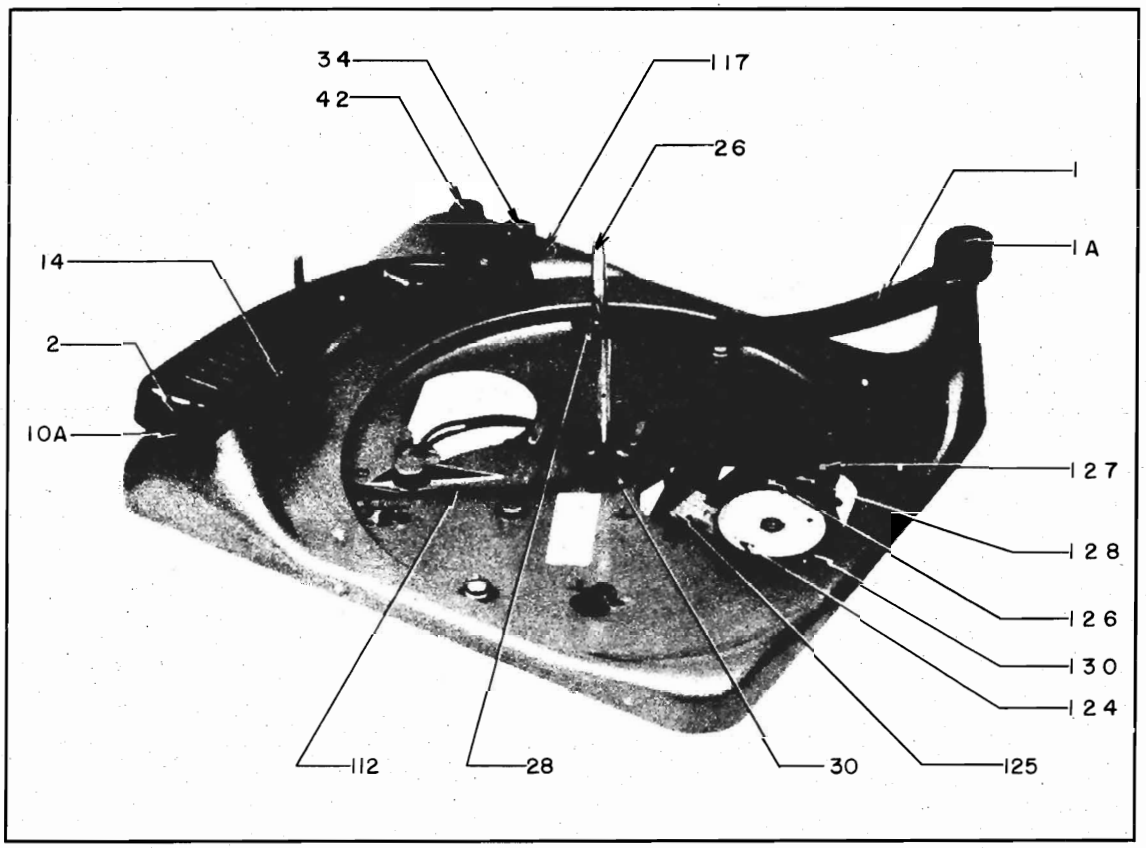

Fig. 1. Top View

©John F. Rider

Compliments of www.nucow.com

MODEL P14

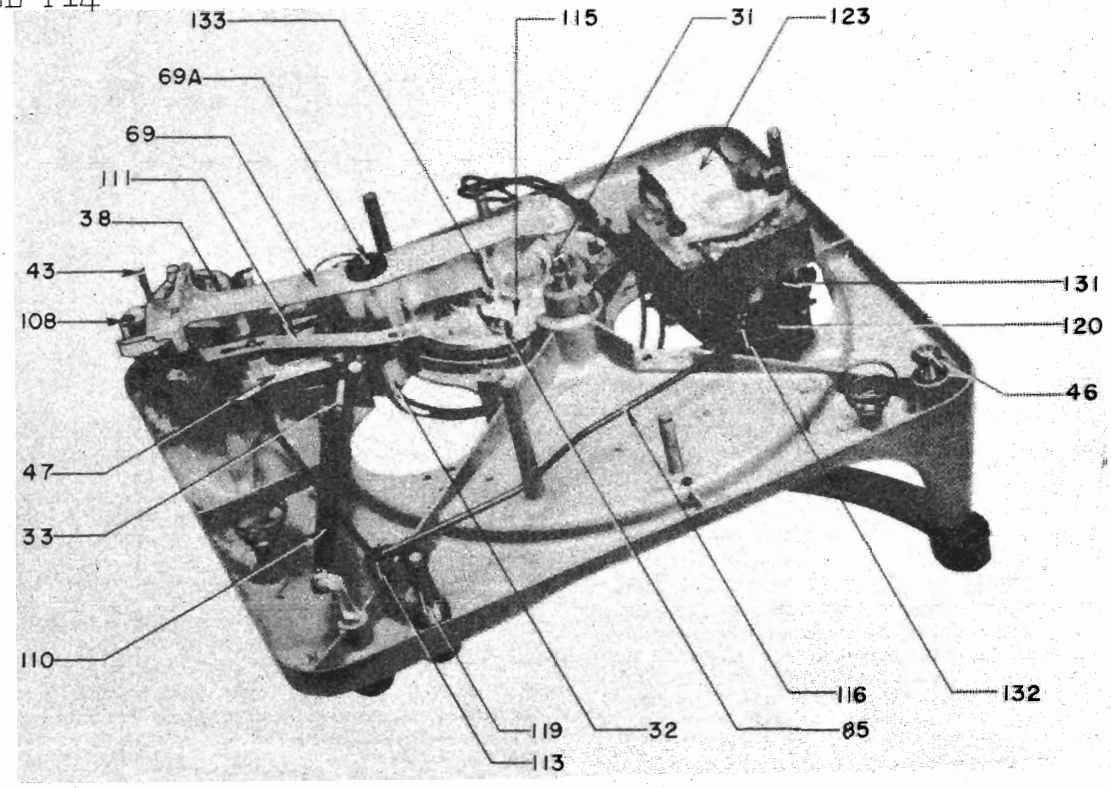

Fig. 2. Bottom View

groove, and red for microgroove (33⅓ rpm) and fine-groove (45 rpm) records. Rotate the motor speed control knob (34) to the 78 rpm position or 33—10″–12″ position for 10- or 12-inch long-play 33⅓ rpm records.

To start the changer operating, turn the changer control knob to "Rej." and release. The changer will operate automatically until the last record has played. The pickup arm will return to the rest and the changer will automatically stop.

TO PLAY FINE-GROOVE (45 RPM) RECORDS—Turn motor speed knob to the 45 position for the 7-in. fine-groove 45 rpm records. Insert the record adapter which will hold the records with its 1½-in. spindle. Be sure that the pickup arm carries the red pickup head.

REJECTING A RECORD—To reject a record at any time while changer is operating, turn changer control knob to "Rej." and release.

STOPPING THE RECORD CHANGER—To turn off the record changer before the automatic shut-off, turn the changer control knob to the "Off" position and lift pickup arm and place it on its rest position.

UNLOADING RECORDS—Lift the record changer support and rotate it counterclockwise until pin on the shaft drops into the locating groove. Lift the stack of records straight up off the spindle.

REPEATING OF 7-, 10- OR 12-INCH RECORDS—To repeat records, place record on the turntable, the record support off the spindle and start changer. Records repeat until control is turned to "OFF" position.

OPERATING SUGGESTIONS.

Do not use warped records for automatic operation. Play these records singly.

Use care when loading or unloading records to prevent bending of the spindle.

Do not attempt to play microgroove or fine-groove with the standard pickup head (brown) or standard records with the red pickup head.

Keep stylus free from dust and lint to insure best reproduction.

When the record changer is not in use, the speed control knob should be left in the "78" position.

Store records flat in folders or in albums and do not lay record on record.

OPERATING PRECAUTIONS.

DO NOT use force to start or stop motor or any part of the record mechanism.

store records on the shelf of the record changer spindle, as the record may warp, especially if the temperature is high.

allow oil or grease to come in contact with the rubber idler wheel.

LUBRICATION—Additional lubrication should not be required for the life of the changer, but in cases of unusually high operating temperatures where lubrication is necessary, lubricate as follows:

Apply Lubriplate to:

1. Hinge bearing inside hinge assembly (13, Fig. 3).
2. Locator housing (75, Fig. 3) and set-down locator plate (43, Fig. 2).
3. Cam faces on lift arm (69, Fig. 2), lift arm bearing and lift arm cut-off rod bearings.
4. Between lever spring (38, Fig. 3) and cut-off rod.
5. Heart-shaped cam track on cam and cam bearing (133, Fig. 2).
6. Spindle between roller plunger and roller spring housing and between the roller spring housing and the spindle body (31, Fig. 2).
7. Turntable ball bearing (30, Fig. 1).

Apply a small quantity of mineral oil to:

1. Pickup arm locator assembly bearing and ball bearing pickup arm post (75, Fig. 3).
2. Control lever bearing (47, Fig. 2).
3. Turntable and spindle bearing (30, Fig. 1).

CYCLE OF AUTOMATIC OPERATION—At the end of the record when the stylus is in the eccentric groove at the center of the record, the rate of the forward movement increases and the end of the trip link nearest the spindle contacts the trip lever and turns it as the pickup arm advances. The trip lever, through spring washer tension, turns the trip pawl. The trip pawl is moved far enough for the sharp point at the end to definitely engage the projection on the turntable hub, thereby turning the cam to start the change cycle.

As the main cam gear is turned by the turntable gear, the lift arm roller (133, Fig. 2) moves around the heart-shaped cam at the center of the cam gear. The outside end of the lift

©John F. Rider

Compliments of www.nucow.com

MODEL P14

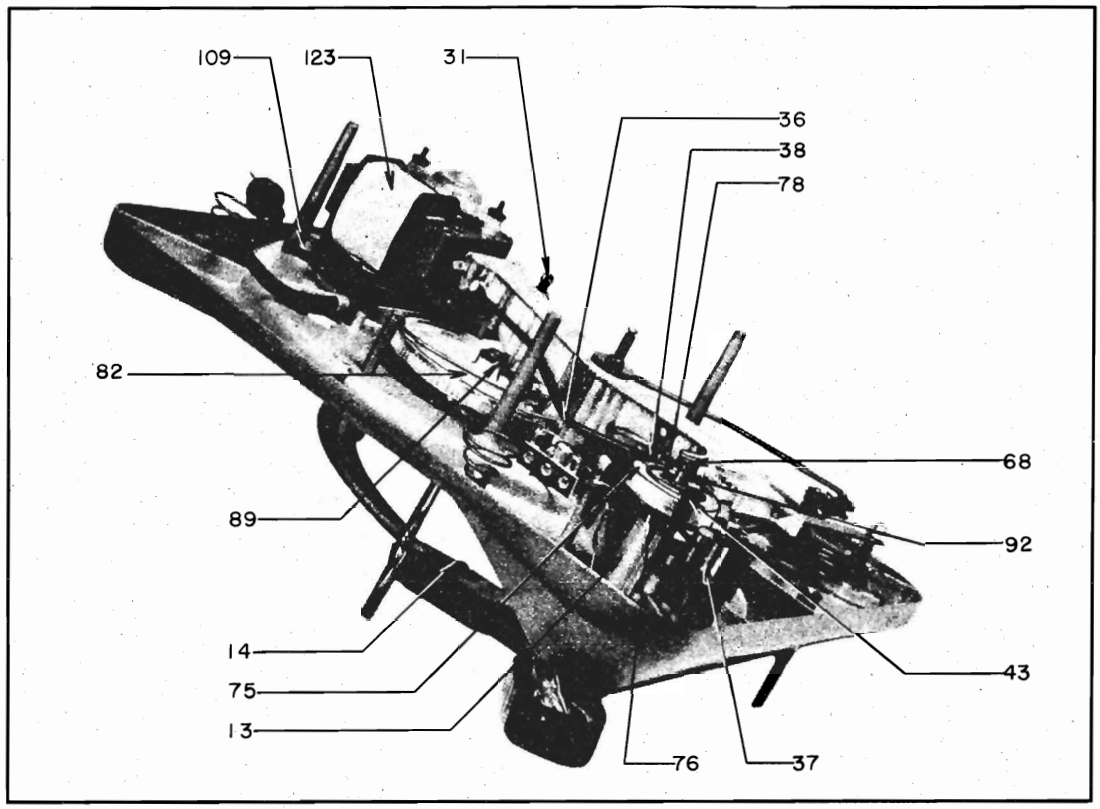

Fig. 3. Bottom View

arm raises or lowers the pickup arm by one cam action and swings the pickup arm in or out by another cam action. The pickup arm is first lifted by the cam pushing on the pickup arm lift rod (92, Fig. 3), then the pickup arm is swung out away from the records by the end of the lift arm which hits the stud of the ratchet arm (75, Fig. 4) assembly and rotates the pickup arm. After the pickup arm has swung out of the way, the inside end of the lift arm pushes up roller plunger (31, Fig. 3) which actuates the record pusher and causes it to move the bottom record into position to fall to the turntable.

Indexing is accomplished by the locator plate (43, Fig. 2) and the ratchet arm (75, Fig. 3). During the change cycle, the ratchet arm (75, Fig. 3) is pressed up against the locator plate (43, Fig. 3). The notches in these two parts should come together. During the last half of the cycle, the locator spring (38, Fig. 3) rotates the locator (43, Fig. 3) and the ratchet arm against the seven-inch index cam (37, Fig. 3).

During each cycle the adjusting ring (9, Fig. 4), rotates out and allows cam (11) to return to 10-inch index position if it had previously been tripped by a 12-inch record. Automatic shut-off after last record is accomplished by the cut-off rod (36, Fig. 3). When the record support arm falls onto the shelf of the spindle, the record pusher (28, Fig. 1) is stopped by the record support arm (1, Fig. 1). This limits the vertical travel of the Record Pusher Shaft Assembly (31, Fig. 3) so that the inside end of the cut-off rod (36, Fig. 3) hits the collar on the shaft assembly, causing cut-off rod (36) to rotate so that the outside end of rod (36) hits the control lever (47, Fig. 2) and rotates the lever to the "OFF" position.

ADJUSTMENTS

PICKUP ARM INDEXING—Screws (18, Fig. 4) and (19, Fig. 4) are used to adjust the point at which the stylus lands on the record. If the stylus lands too far out on the edge of the record, loosen screw (18) slightly and tighten screw (19).

If stylus is too far in on the record, loosen screw (19) slightly and tighten screw (18).

If it is necessary to make adjustment of screw (20, Fig. 4), loosen screw (20) and match locator plate (43, Fig. 2) and ratchet arm (75, Fig. 3) and with locator plate rotated against index stop in the base plate, rotate pickup arm to index approximately for a 10-inch record. Make a fine adjustment of indexing with screws (18, Fig. 4) and (19, Fig. 4), as above. When the correct set-down is obtained for the 10-in. position, the 12- and 7-inch needle set-down will be also correct.

PICKUP ARM HEIGHT—The pickup arm height is adjusted by the screw (92, Fig. 4) located on top of the pickup arm lift rod. Turn the screw out or in until the underneath side of the pickup arm clears the rest by $\frac{1}{8}$ in. or $\frac{3}{16}$ in.

TROUBLE SHOOTING CHART

SYMPTOM	CAUSE	REMEDY
1. Control Knob (42, Fig. 1) cannot be turned to "ON" position.	Machine shut off during cycle.	Rotate the turntable clockwise, by hand, until the control knob (42, Fig. 1) is free.
2. Turntable does not turn when control knob (42, Fig. 1) is moved to "ON" position.	1. Changer stalled in cycle. 2. No voltage at motor (123, Fig. 2). 3. Motor defective. 4. Idler wheel (124, Fig. 1) not engaging turntable rim.	1. Revolve the turntable clockwise, by hand, until it starts turning under its own power. 2. (a) Check wiring and joints. (b) Check the switch (32, Fig. 2) for proper operation. 3. Remove turntable and check whether motor operates without load. If a voltage is present at the motor and the pulley does not revolve, the motor is defective. 4. In case turntable is not moving with no load rotation of motor pulley: (a) Check motor idler assembly for free contact between motor pulley and turntable. (b) Clean turntable rim and rubber tire of the idler wheel.

©John F. Rider

Compliments of www.nucow.com

MODEL P14

TROUBLE SHOOTING CHART (Cont'd)

SYMPTOM	CAUSE	REMEDY
3. Changer fails to cycle when the control knob is turned to "Rej."	The manual reject not actuating the trip.	Check for contact between reject link (112, Fig. 1) on the control lever (47, Fig. 2) and the trip pawl (84, Fig. 6) on the main cam (82, Fig. 3) when knob is in the "Rej" position. Contacting the trip should actuate the trip pawl (84, Fig. 6) to engage with pinion gear on the turntable hub. When the trip rod is turned and the cam pawl (84, Fig. 6) does not move forward, engaging the teeth on the turntable hub, check for binding between cam pawl and the cam. Clean and check for free movement, but do not lubricate.
4. Record fails to drop when changer cycles.	1. Spindle pusher shaft broken. 2. Pusher in spindle does not move far enough forward to eject record. 3. Lift screw loose. 4. Pusher raises outside spindle body.	1. Loosen the spindle holding setscrews and replace the spindle assembly (26, Fig. 1) with a new unit. 2. If the roller (31, Fig. 2) is compressed and the pusher (28, Fig. 1) does not move far enough forward to eject record, the spindle should be replaced. 3. Check screw (69A, Fig. 2) and tighten. 4. The pusher (28, Fig. 1) should first rise inside the spindle body, then move forward inside the center hole in the record. If faulty operation, replace complete spindle assembly.
5. More than one record drops.	1. Record hole too large. 2. Spindle slide not fully down. 3. Record support binding on spindle, or bent out of square with the shaft. 4. Record pusher (28, Fig. 1) defective.	1. Check diameter of hole. 2. Check to determine if the spindle slide is all the way down. (a) Check for free movement of the slide. (b) After records are placed, be sure the slide is in proper position. When a record is dropped, it will raise slightly returning immediately to its original position. 3. Check straightness of spindle. Straighten the record support (1, Fig. 1) if it is not square with the record support shaft. 4. Record pusher may be deformed, etc. Replace with a new spindle assembly or pusher.
6. Record hits pickup arm.	1. Pusher (28, Fig. 1) in spindle not moving far enough to eject record. 2. Lift arm screw loose. 3. Pusher extending beyond outside diameter of spindle.	1. See No. 4. 2. Tighten lift arm screw (69-A, Fig. 2). 3. Cycle the changer by hand, until roller assembly (31, Fig. 2) is at the top of its travel. Use new record as gage and see if it binds at any point. File off high points on pusher (28, Fig. 1) until record passes freely over spindle.

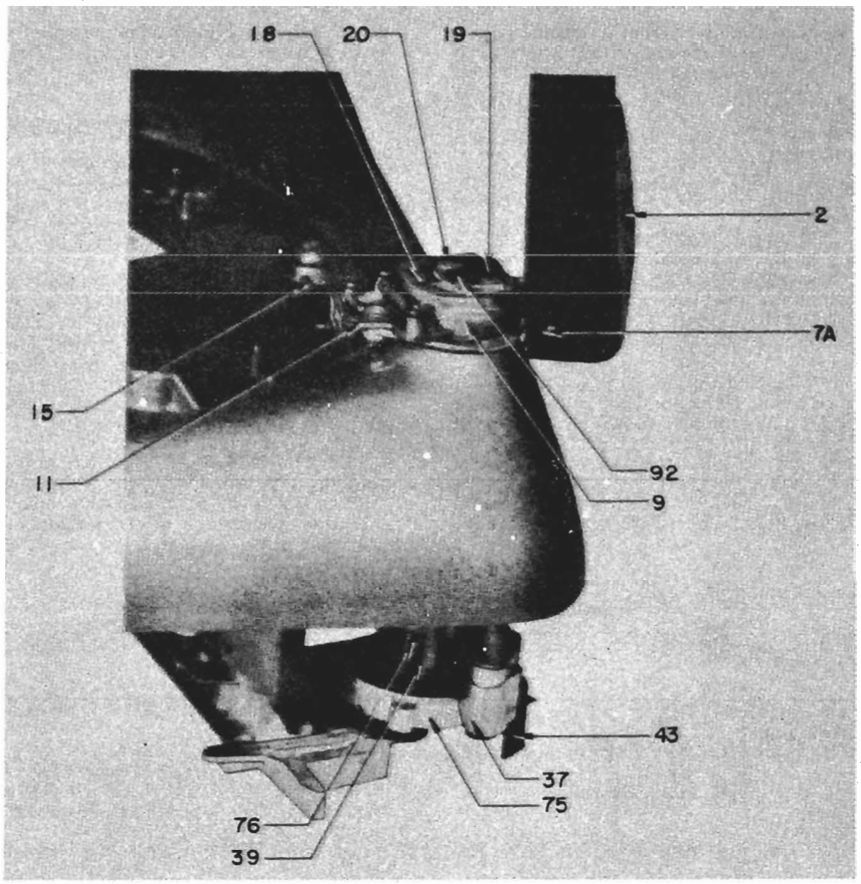

Fig. 4. Pickup Arm Mounting and Adjustment

©John F. Rider

Compliments of www.nucow.com

MODEL P14

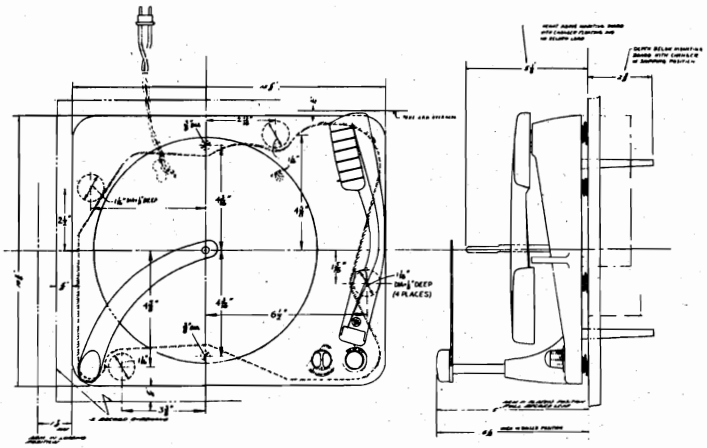

Fig. 5. Over-all Dimensions and Motorboard Cutout

TROUBLE SHOOTING CHART (Cont'd)

SYMPTOM	CAUSE	REMEDY
6. Record hits pickup arm.	4. Pickup arm not adjusted properly.	4. If the hinge bearing (13, Fig. 3) has been removed or the hinge bearing setscrew (20, Fig. 4) has been loosened, the realign position between hinge bearing and the pickup arm locator assembly must be reset. Follow the following procedure: (a) Loosen the setscrew (20, Fig. 4) sufficiently to allow the hinge bearing to slide on the pickup arm locator assembly shaft. The setscrew may be adjusted with an Allen wrench through the hole in the adjusting ring (9, Fig. 4) located between the two adjusting screws. (b) Place a $\frac{1}{32}''$ shim between the set-down locator (43, Fig. 4) and the locator housing (75, Fig. 4). (c) Turn the control knob to the "OFF" position. (d) Raise the pickup arm and rotate the hinge assembly counterclockwise as far as it will go. In this position the arm extending from the setdown locator should be engaged by the turned-down leg on the control lever (47, Fig. 2). (e) Take up all the play between the parts by pressing up on the bottom of the locator housing and down on the top of the hinge bearing. (f) Then tighten the hinge body setscrew (20, Fig. 4) and remove shim.
7. Pickup arm does not set down on 10″ record in proper position.	1. Pickup arm not adjusted properly. 2. Hinge catch (11, Fig. 4) does not return to 10″ record position when changer cycles. 3. Binding between safety spring (38, Fig. 2) and locator housing.	1. See No. 6. 2. When the lift arm (69, Fig. 2) has moved as far out as it will go and is about to move back to its starting position, stop the change cycle. Lift the pickup arm and check the gap between the end of the leg on the catch (11, Fig. 4) and outside step on the adjusting ring (9, Fig. 4) to be at least $\frac{1}{64}''$. If the gap is too small, check the setting of the hinge body and the pickup arm locator. The cam face on the lift arm (69, Fig. 2) which contacts the round stud on the bottom of the locator housing (75, Fig. 4), may be bent. Lubricate the hinge bearing with Lubriplate. 3. (a) Check binding of safety spring (38, Fig. 2) against the locator housing. Disassemble the pickup arm locator assembly by removing the lift arm (69, Fig. 2) loosening the hinge bearing setscrew (20, Fig. 4) and pulling the locator housing and pickup arm locator assemblies down from the bottom of the changer. Hold the pickup arm locator shaft and turn the locator housing assembly to slightly compress the safety spring release and check that safety spring returns the pickup locator casting firmly against the stop surface in the locating housing assembly. If binding is present, remove the safety spring to see if the pickup arm locator casting turns freely in the locator housing casting. Remove burrs or sharp edge on end of safety spring, stretch it to increase tension or replace. (b) Check to see if the locator plate (43, Fig. 2) is meshing with the locator housing when the lift rod (92, Fig. 3) is positioned at the beginning of the sloping cam surface of the lift arm (69, Fig. 2) in the final stage of the cycle. Swing the pickup arm halfway in towards the spindle. If the locator plate and locator housing disengage in this position, it is necessary to reset the clearance between the locator plate and the locator housing. It may be necessary to file off any burrs which may be present on the mating surfaces of the locator plate and the locator housing. When the index lever (15, Fig. 4) has been depressed, it is held in the position until the catch (11, Fig. 4) is disengaged. See No. 8.

©John F. Rider

Compliments of www.nucow.com

MODEL P14

TROUBLE SHOOTING CHART (Cont'd)

SYMPTOM	CAUSE	REMEDY
7. Pickup arm does not set down on 10″ record in proper position (Cont'd).	4. Hinge catch does not disengage from the hinge cam.	4. (a) Check to see if the leg on the catch (11, Fig. 4) is sliding down the incline on the leg of the adjusting ring. (b) If the catch (11, Fig. 4) and the hinge cam are not disengaging when the catch leg is resting on the inside step on the adjusting ring, file the edge of the catch which contacts the hinge cam until the two parts have a clearance between them of about $\frac{1}{64}$″ when the leg on the catch is on the inside step on the adjusting ring.
8. Pickup arm does not set down on 12″ record in proper position.	1. Diameter of 12″ record under-size.	1. The set-down position for 12″ records is determined by the edge of the record striking the index lever (15, Fig. 4). If a 12″ record has a diameter of less than standard size of $11\frac{7}{8}$″ plus or minus $\frac{1}{32}$″, it may fail to depress the trip lever far enough.
	2. Enlarged center hole in record.	
	3. Pickup arm not adjusted properly.	3. See No. 6.
	4. Binding between safety spring and locator housing.	4. See No. 7.
	5. Index lever does not lock when 12″ record drops.	5. Stop the changer just after a 12″ record has dropped to the turntable and before the pickup arm has a chance to move in over the record. The index lever should be forced down until the step on the hinge cam passes the edge of the catch (11, Fig. 4), preventing the hinge cam and the index lever from returning to their original position. If the trip lever does not stay down in a depressed position, check: (a) To see if the catch (11, Fig. 4) is free to move forward and engage the hinge cam. (b) If the stop on the hinge body is defective, it might allow the pickup arm to move too far out, thus moving the index finger away from the spindle.
	6. Hinge catch (11, Fig. 4) does not go inside step on adjusting ring when index lever is depressed.	When a 12″ record falls towards the turntable, the index lever (15, Fig. 4) is tripped and the leg on the catch (11, Fig. 4) should be moved out over the incline between the inside and outside steps on the adjusting ring leg and held in that position by the shoulder on the hinge cam until the pickup arm starts to move in over the record. The leg on the catch should contact the incline and be moved out as it slides down the incline until the catch is disengaged and the index lever can snap back to a horizontal position. If this does not occur, file about a $\frac{1}{64}$″ diameter on the edge of the catch leg which contacts the incline. Check for binding between hinge body and hinge bearing (13, Fig. 3). Burrs on the bearing surfaces or lack of lubrication may prevent the hinge bearing from turning freely.
9. Needle does not track across record properly.	1. Needle may be clogged by accummulation of lint, dirt, etc.	1. Clean foreign material from around the needle.
	2. Locator housing does not disengage from the set-down locator when a cycle is completed.	2. When the changer is not in cycle, a $\frac{1}{32}$″ gap should exist between the locator housing and the set-down locator (43, Fig. 2). If the gap is small enough to allow the parts to touch and bind as the needle moves across the record, the hinge bearing must be reset. See No. 6.
	3. Hinge bearing binds.	3. (a) Check the locator housing and set-down locator for binding. (b) Check the bearing in the pickup arm post for binding. The bearing is located below the hinge bearing (13, Fig. 3). In order to inspect it, loosen the setscrew (20, Fig. 4) in the hinge bearing. Unsolder the pickup leads and pull them out. Pull up on the hinge and pickup assemblies. Clean foreign matter or corrosion from the bearings and lubricate with light mineral oil.
	4. Changer not level.	
	5. Excessive vibration during long play operation.	5. Check mounting of changer.
10. Changer trips before arm reaches end of record.	1. Record hole too large.	1. The groove may turn eccentric with the spindle and therefore cause premature tripping.
	2. Binding of trip link.	2. With the trip link released, check the trip link for freedom of motion.
11. Changer does not cycle when record has been played.	1. No eccentric trip groove on record.	1. Turn control knob to "REJ." at end of the record.
	2. Needle jumps out of groove in record.	2. (a) Check trip pressure. (b) Check for shallow groove on record. (c) Check for clean needle. (d) Check for binding in the pickup bearing or locator housing.
	3. Trip pawl binding on cam face.	3. The trip pawl (84, Fig. 6) must be free to move forward and engage the teeth of the turntable hub when the link releases it. Check for burrs or foreign matter lodged between the cam and the pawl. Do not oil as this might collect dirt and gum up the pawl.
12. Turntable speed too slow.	1. Binding in turntable bearing.	1. Check turntable bearing for freedom of movement. Hold the idler wheel (124, Fig. 1) out of engagement with the turntable and spin the turntable by hand to see if it turns readily. If binding occurs, clean and lubricate with light oil.
	2. Motor pulley too small in diameter.	2. Replace pulley.
	3. Line voltage too low.	3. Minimum line voltage should be 105 volts.
	4. Operating temperature too low.	4. Operating temperature should not be less than 60° F.

©John F. Rider

Compliments of www.nucow.com

MODEL P14

TROUBLE SHOOTING CHART (Cont'd)

SYMPTOM	CAUSE	REMEDY
13. Turntable speed too fast.	1. Line voltage high. 2. Motor pulley too large in diameter.	1. Check line voltage. 2. Replace pulley.
14. Turntable stalls during cycle.	1. Motor idler (124, Fig. 1) not engaging turntable. 2. Turntable bearing tight. 3. Operating temperature too low. 4. Line voltage too low. 5. Binding in drive mechanism. 6. Binding between pickup arm lift rod and lift arm cam face. 7. Spindle roller spring compressed too far.	1. See No. 2. 2. See No. 2. 3. See No. 12. 4. Minimum voltage should not be less than 105 volts. 5. (a) Check for binding in gear teeth, check for bent cam bearing or bent spindle pushing. (b) Check lift arm bearing for freedom and the lift arm roller to be sure it is not bent, causing binding in the cam track. 6. Cycle the changer, stopping it half way through the cycle as the left arm is about to return. Lift pickup arm and raise lift rod (92, Fig. 3) by pulling up on the adjusting screw (92, Fig. 4) as high as it will go. Feel the lift arm (69, Fig. 2) for play. The lift rod may still touch the lift arm cam face, but it should not bind. If binding occurs, check for bent lift arm bearing or remove fiber washer under the lift arm to lower it. 7. Cycle the changer and check that before the top of the lift cam arm is reached, the pusher housing should stop its upward motion and the roller should continue up .005″ to .047″ more, slightly compressing the roller spring. If the spring compresses too much, the changer may stall on the shut-off cycle. (a) Check the lift arm to see it is square with the base plate. (b) If spring is too much compressed, remove fiber washer between lift arm and steel washer.
15. Changer continues to cycle.	1. Reject spring (33, Fig. 2) loose. 2. Locator spring (83, Fig. 6) loose. 3. Trip link (112, Fig. 1) frozen. 4. Trip pawl (84, Fig. 6) binding.	1. Check that reject spring (33, Fig. 2) is secured in position at both ends. 2. Check cam locator spring (83, Fig. 6) to see it has not fallen off or is not secured at an end. 3. Check trip link (112, Fig. 1) in the reject position. 4. Check trip pawl (84, Fig. 6) for binding, clean and do not oil.
16. Noise during playing of record.	1. Rumble from motor. 2. Defective turntable bearings. 3. Defective motor idler wheel (124, Fig. 1) 4. Defective records. 5. Turntable scrapes. 6. Squeaks.	1. Check the motor grommets for free suspension of motor. 2. Check for foreign matter in bearing, defective belts, binding between balls and ball retainer, rough surfaces on washers. Clean and lubricate with Lubriplate or light mineral oil. 3. A rapid thumping sound may indicate a flat spot on the motor idler wheel (124, Fig. 1). Check the rubber tire on the idler and the bearing of the idler. 4. Check for defective or warped record. 5. (a) Check for warped record. (b) Check for bent motor idler. 6. Check for good lubrication of changer parts as indicated under "Lubrication."
17. Changer does not shut off after last record has been played.	1. Record support binding on spindle. 2. Cut-off rod (36, Fig. 3) not engaging shoulder pusher housing.	1. The record support (1, Fig. 1) must rest on the offset shoulder of the spindle. See also No. 5. 2. On the shut-off cycle, the end of the cut-off rod (36, Fig. 3) should contact the shoulder on the bottom of the spindle pusher housing, part of pusher and roller assembly (31, Fig. 3), and turn the cut-off rod over 90°. If the end of the cut-off rod passes under the pusher housing as the changer cycles on the shut-off cycle: (a) Check that record support rests on spindle. (b) Check spindle to see it is being held in place by the spindle setscrews. (c) Check lift arm screw (69A, Fig. 2) for tightness. (d) Check for cut-off rod (36, Fig. 3) being too short.
18. Changers shut off prematurely.	1. Spindle roller spring compressed too far. 2. Roller spring in spindle too weak. 3. Record too thick. 4. Cut-off rod (36, Fig. 3) not being reset.	1. See No. 14. 2. If the roller spring is compressed under the load of a full stack of records, it may cause premature shut off; replace spindle assembly (26, Fig. 1). 3. Old style ⅛″ thick records will shut-off the changer. 4. The flat spring (38, Fig. 3) acting against the cut-off rod should throw the rod against its top on the lift arm (69, Fig. 2) and hold it there. If the cut-off rod is not fully turned, the bent-up end next to the spindle may stick up high enough to prematurely contact the shoulder on the pusher housing, part of pusher and roller assembly (31, Fig. 3). Check: (a) Lever spring (38, Fig. 3) for tension. (b) Lubrication of cut-off rod bearings. (c) Clearance between the end of the cut-off rod (36, Fig. 3) which passes under the control lever (47, Fig. 2) and the bottom of the round stud on the control lever.
19. Turntable continues to revolve when control knob is turned to "OFF" position.	Switch (32, Fig. 2) defective.	Check switch for intermittent contact.
20. Needle does not set down on 7″ record in proper position.	Tail on set-down locator plate (43, Fig. 2) damaged or bent out of position.	Straighten locator plate or replace it.

©John F. Rider

Compliments of www.nucow.com

MODEL P14

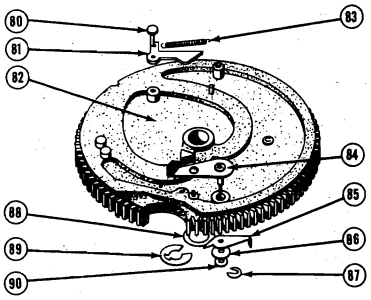

Fig. 6. Triple Speed Main Cam Gear

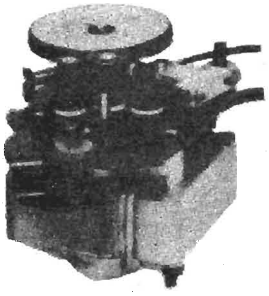

Fig. 7. Motor RBH-014

REPLACEMENT PARTS LIST
MODEL P14

Ref. No.	Description	Cat. No.
1	RECORD SUPPORT ARM ASSEMBLY—Includes knob, support arm, shaft with cross pin	RMX-160
1A	KNOB—For record support arm assembly	RDK-185
2	PICKUP ARM	RPA-012
2A	LONG-PLAY PICKUP HOUSING—Red, housing less pickup	RPH-008
2B	STANDARD PICKUP HOUSING—Brown, pickup housing less pickup	RPH-007
2C	WEIGHT—For pickup housing RPH-007	RWP-005
3	SPRING—Counterbalance spring for pickup arm	RMS-192
7A	PIN—Hinge pin on pickup arm	RMP-025
	BRACKET—Hinge pin bracket, fits around item 7A	RAD-046
10	ADJUSTING RING ASSEMBLY—Includes spring adjusting ring and two adjusting screws; used for adjusting pickup arm set-down	RMX-151
13	HINGE ASSEMBLY—One which pickup arm rotates across record; does not include item 10, adjusting ring assembly	RMX-152
14	PICKUP—Long play variable reluctance pickup with 1 mil stylus	RPX-041
17	PICKUP—Standard play variable reluctance pickup with 3 mil stylus	RPX-040
22	PICKUP ARM HINGE BEARING ASSEMBLY—Fits inside item 13 and rotates on ball bearings	RMX-153
24	BEARINGS—Ball bearings for pickup arm to rotate on	RMB-019
25	SPACER—For ball bearing, item 24	RHJ-011
26	SPINDLE—Includes spindle, guide at top of spindle, spindle base, and guide spring	RMX-154
28	RECORD PUSHER—In spindle for pushing record off spindle shelf	RML-037
30	BEARING—Ball bearing and race for turntable to rotate on	RMB-020
31	RECORD PUSHER SHAFT ASSEMBLY—Includes spindle roller pin, record pusher shaft, roller spring housing, roller spring, groove pin and roller plunger	RMX-155
32	SWITCH—A-c switch and plate assembly for 110 volts, 60 cycles	RSW-077
33	SPRING—For returning control lever from "Rej." to "ON" position	RMS-195
34	KNOB—Speed control knob	RDK-186
37	CAM—For 7-inch records, is moved into position when motor speed knob is rotated to 7-inch slow position	RMC-047
38	SPRING—Locator spring for rotating locator plate back against index cam at end of change cycle	RMS-196
38A	WASHER—Two required, one below turntable bearing and the other between bearing and turntable	RHW-016
39	WASHER—Compression washer for holding locator plate against ratchet arm assembly	RHW-019
42	KNOB—For changer control "ON," "OFF," "REJ." knob	RDK-187
43	LOCATOR PLATE—For indexing pickup arm, is rotated against index cam by spring (38)	RAP-016
46	SPRING—Safety coil spring inside locator assembly	RMS-197
47	LEVER—ON-OFF-REJ., control lever and cam	RML-033
80	DRIVE PIN—For mounting cam locator lever (114) to base plate	RMP-026
83	SPRING—To hold cam locator (114) against main cam gear	RMS-193

Ref. No.	Description	Cat. No.
60A	"C" WASHER—Prevents record support shaft from being pulled out of base plate	RHC-028
	RIVET—For attaching item 47 to the arm of the control knob crank	RHR-011
69	LIFT ARM ASSEMBLY—Die cast arm which is moved by the heart-shaped cam of the main cam gear (115); includes roller drive pin, roller, lift arm spring lever, automatic shut-off rod, spring and pin	RMX-168
75	LOCATOR ASSEMBLY—Pickup arm locator assembly, includes pickup shaft and pickup locator	RMU-056
	PIN—Drive pin for holding (122) onto locator assembly (75)	RMP-027
76	SPRING—Ratchet pawl spring for holding ratchet pawl (122) against serrated edge of trip rod	RMS-198
78	SPRING—Conical spring for holding pickup lift rod against cam end of lift arm (69)	RMS-199
86	WASHER—Spring washer on cam locator pawl assembly	RHW-022
92	LIFT ROD AND ADJUSTING SCREW—For raising pickup arm as lift arm end moves through its cycle	RMU-057
89	"C" WASHER—For mounting main cam gear (82) onto stud of base plate	RMC-046
	ROD—Connects between 7-inch index cam and motor speed control linkage	RMU-059
87	"C" WASHER—For index cam	RHC-033
109	MOTOR FASTENER—For mounting 3-speed motor, 3 required	RHH-011
110	INDEX ROD—Operates index arm	RML-042
84	LEVER—Trip lever engaging pawl on main cam gear	RML-043
116	ROD—Speed control rod	RML-046
117	ESCUTCHEON—Speed control escutcheon	RDE-072
119	SPRING—Motor speed control shaft spring	RMS-210
120	ARM—Motor speed control shaft and arm	RMX-165
121	LINK—Trip link	RML-047
85	PAWL—Trip pawl on main cam gear (115)	RMM-139
123	MOTOR ASSEMBLY—Includes idler wheel, two springs, idler wheel shift cam, speed control arm and 3 pulleys	RBH-014
124	IDLER WHEEL—Rubber tired wheel	RMW-060
125	ARM—Idler wheel arm	RMA-008
126	PULLEY—Low speed pulley (33 ⅓ rpm)	RMW-061
127	PULLEY—Medium speed pulley (45 rpm)	RMW-062
128	PULLEY—High speed pulley (78 rpm)	RMW-063
129	ARM—Pulley mounting arm	RMA-009
130	SPRING—Idler wheel tension spring to pull wheel against inside of turntable rim	RMS-205
131	SPRING—Pulley arm tension spring	RMS-211
132	ARM—Motor speed arm on motor assembly	RMA-010
112	ROD—Reject rod	RML-044
113	GROMMET—For motor speed control shaft	RHG-027
81	LOCATOR—Cam locator lever fastens to base plate under main cam gear	RML-045
82	MAIN CAM GEAR ASSEMBLY—Main cam gear with heart-shaped cam channel. Includes main cam pawl, pawl tension spring and spring wire	RMX-164
123A	MOTOR—3-speed motor with belts*	RBH-016
124	WHEEL—Idler wheel	RMW-060
133	BELT—Drive belt	RMD-005
130	SPRING—Idler wheel tension spring	RMS-205
134	PULLEY—Pulley for 45 rpm	RMW-064
135	PULLEY—Pulley for 33 ⅓ rpm	RMW-065
136	GROMMET—Motor mounting grommet	RHG-028

* Some changers use this type of motor.

©John F. Rider

Compliments of www.nucow.com

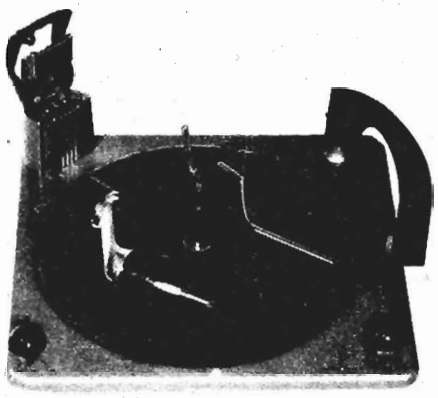

GENERAL

This single pickup arm record changer is designed for triple speed operation (33⅓, 45 or 78 revolutions per minute) from a power source of 110 volts at 60 cycles. It will play the Standard Groove or Microgroove type records for these speeds, a single record at a time or a series of twelve 7-inch, twelve 10-inch or ten 12-inch records automatically.

> *Note: Never stack the Standard and Microgroove records intermixed for automatic operation* as playing of each type record requires special attention to the pickup and record speed required.

The pickup arm is designed to use a two position knob control dual stylus assembly. The control knob is indexed to the figures on the *pickup arm* corresponding to the speed of the record being played. The speed control knob is set to the position corresponding to the rotation speed required by the record being played. Three record spindles are used. The slender spindle with the least offset is used for 10-inch and 12-inch records. The slender spindle with larger offset is used for 7-inch records. A third spindle is required to accommodate the large center hole of the 7-inch 45 rpm records.

RECORD PLAYER OPERATION

STANDARD-GROOVE RECORDS (78 RPM, 10- OR 12-INCH).

Use 10-inch/12-inch spindle, the spindle with the slightest bend. The bend should face ejector table. Turn cartridge selector lever to 78 rpm. Turn motor speed control knob to 78 rpm. If 10-inch records, lower 7-inch/10-inch record support to horizontal position. Place records over spindle onto record support. Lower balance arm to horizontal position resting on top of record stack. If 12-inch records are to be played, raise 7-inch/10-inch support arm to a vertical position. Place records on spindle, supporting edge of records on 12-inch record support. Lower balance arm to horizontal position, resting on top of record stack.

STANDARD-GROOVE RECORDS (33⅓ RPM, 10- OR 12-INCH).

If 10-inch or 12-inch (33⅓ rpm) records are to be played, use the same spindle as for 78 rpm. Follow directions for playing 78 rpm, except set cartridge selector lever at 78 position and set motor speed control knob at 33 position.

MICROGROOVE RECORDS (33⅓ RPM, 7-, 10- OR 12-INCH).

If 7-inch (33⅓ rpm) records are to be played, use ¼-inch plain spindle, with largest offset, insert it in center of turntable firmly, the bend facing the record support. Seven-inch records should

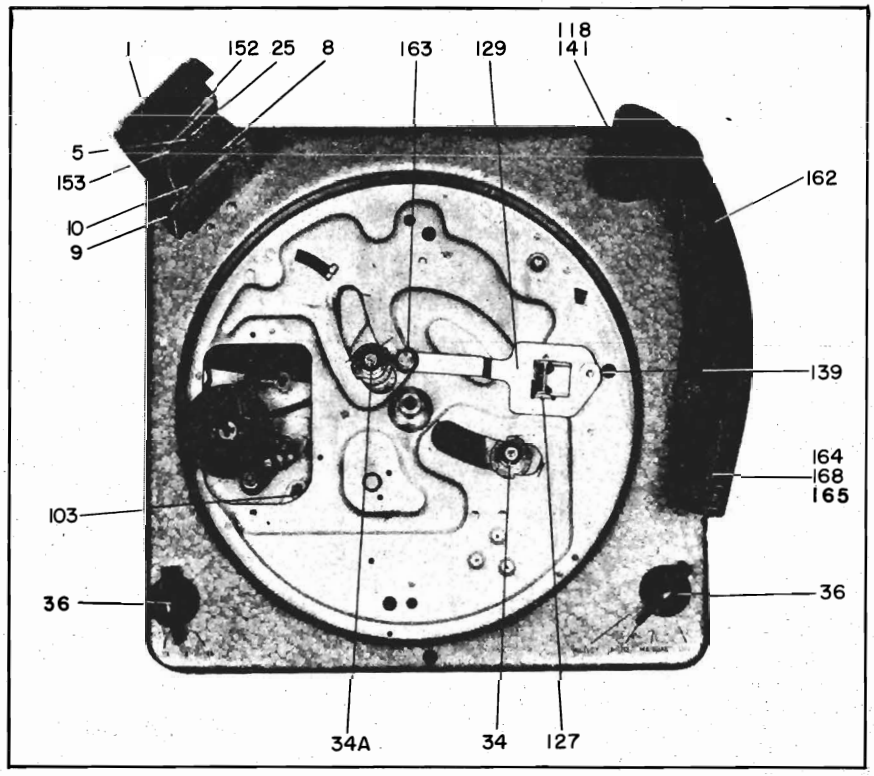

Fig. 1. Top of Record Changer

©John F. Rider

Compliments of www.nucow.com

MODEL P15

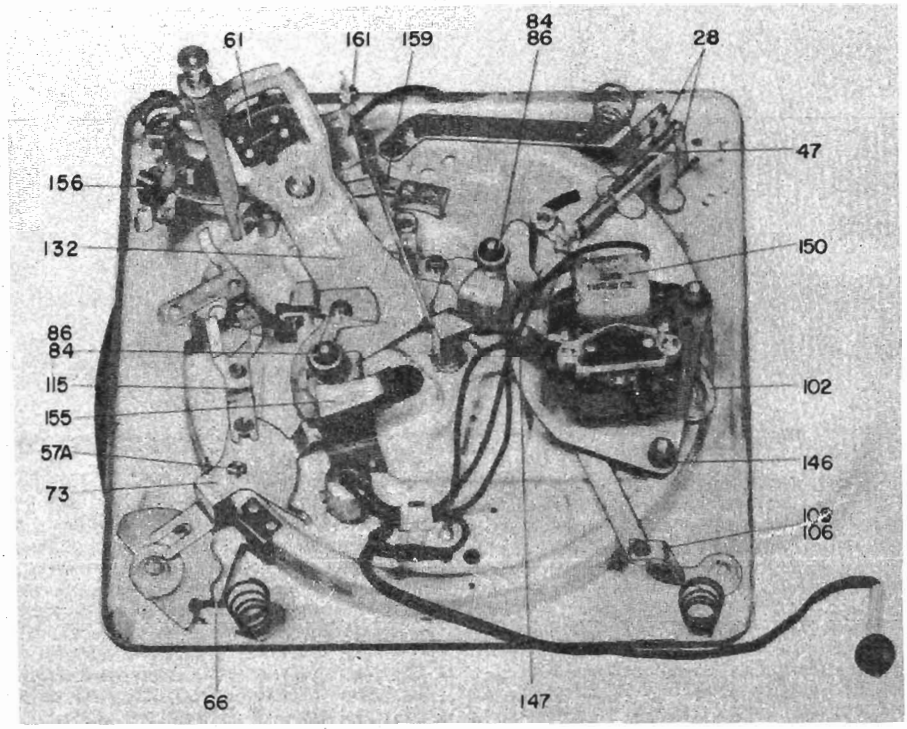

Fig. 2. Bottom View

be placed on the spindle and supported at the edge by the lower step of the 7-inch/10-inch support. The record stabilizer should then be lowered to the horizontal position resting on top of record stack. Turn cartridge selector lever to 33/45 rpm. Set motor speed control lever to 33 rpm.

MICROGROOVE RECORDS (45 RPM, 7-INCH).

Use 1½-inch spindle (with plastic ends). Insert spindle in turntable center hole; with spindle top facing record support, make sure the spindle sets in slot firmly. Set dual pickup cartridge to 33/45 position, and set speed control knob to the 45 position.

Seven-inch (45 rpm) records should be placed on the spindle and supported at the edge by the upper step of the 7-inch/10-inch record support. When playing 45 rpm records, the balance arm must remain in vertical position.

CAUTION—To avoid damage to the pickup stylus and to the record surfaces, do not allow the standard pickup stylus to be used on the microgroove records. Do not drop the pickup arm onto the record.

MANUAL OPERATION

Raise the *hinged shelf* for 10-inch records and the *hold-down arm* into a vertical position. Slip the record down over the proper *spindle* onto the turntable. Turn the record mechanism *control knob* to the MANUAL position. This will start the turntable rotating. Gently lower the pickup arm on the first groove of the record. When the record is through playing, return the tone arm by hand to its rest position. Stop turntable rotation by turning *control knob* to OFF position. When through playing phonograph, turn the Phono-Radio control to its OFF position.

AUTOMATIC OPERATION

Be sure the pickup is on the pickup arm rest. Point arrow on the pickup arm to select the stylus for records to be played, 78 or 33/45. Place the proper spindle in center hole. Place a stack of records, not to exceed twelve 10-inch or 7-inch records, or ten 12-inch records, not intermixed, over center post. All records must be of the same speed. The records will now rest on center post and on record support post. Set speed control to proper speed, turn control knob to reject position and release it. This turns changer on and starts change of cycle, dropping the first record on the turntable. To reject record, turn the control knob to "reject" and release it.

To discontinue operation, all records should be dropped to the turntable by repeatedly turning the control knob to reject position until all unplayed records have been dropped to the turntable. Place the pickup arm on the pickup arm rest and turn the control knob to the OFF position.

PICKUP CARTRIDGE

The Model P15 record changer is equipped with a dual stylus pickup for playing microgroove and standard groove records. A selector knob control permits instant setting of the dual assembly, to bring the required stylus into operating position of a corresponding type of record. The knob index (arrow) indicates the operating position of the stylii and is pointed to the 1 mil microgroove stylus with respect to the stylus assembly. To operate the knob control, the knob is first depressed and then turned to the desired position with its arrow index pointed to the end of the tone arm for microgroove records, or pointing to the tone arm rear for standard groove types.

SERVICE—To remove stylii assembly from cartridge, pull off the knob and compress spring slightly to release tension upon retaining washer. Retaining washer, spring and flat washer may then be picked off shaft and stylus assembly removed from cartridge. To insure optimum performance from the RPX-050 cartridge, its stylii, magnetic pole pieces and gaps should be cleaned periodically of foreign particles accumulated from the record surfaces. A soft bristle brush, Cat. No. RQB-001, or equivalent, should be used to clean these parts. These parts are more readily accessible for cleaning if the stylus assembly control knob is depressed and rotated to expose the stylii, poles, gaps, and the stylus guide and its recess. The gap clearance between stylus and each of its pole pieces has been adjusted to be not less than .010 inch. To obtain optimum performance from your cartridge, be careful not to distort parts of the assembly which would disturb this adjustment.

OPERATING PRECAUTIONS

1. Do not, under any circumstances, connect the motor to a source of direct current or to alternating current other than that specified.

©John F. Rider

Compliments of www.nucow.com

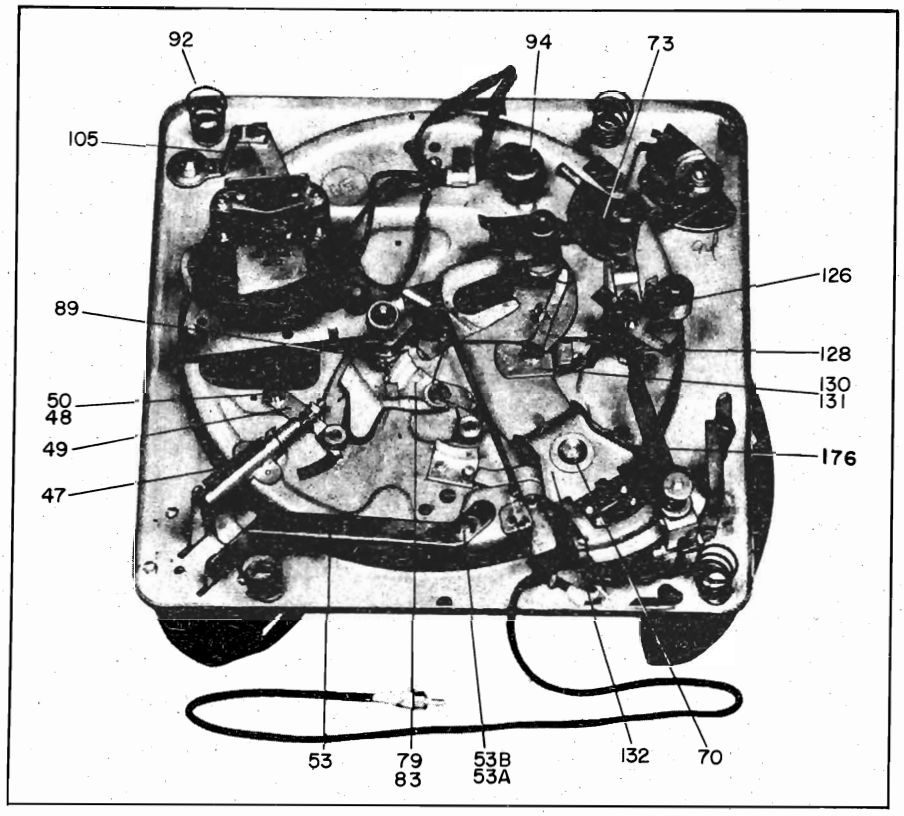

Fig. 3. Bottom View

2. Do not allow oil or grease to come in contact with the rubber tired friction drive wheels (or belts) or the Velocity Trip Arm friction washers, part of item (134).

3. Never use force to start or stop the motor, or any part of the record changer mechanism.

4. Do not intermix Microgroove records with the Standard Groove type.

5. Always make certain that the Speed Control is set to the proper speed position as required for the type of record.

6. Use only records in good condition for automatic operation. For warped, odd size, or home recorded records, play as for manual operation.

7. Do not store the records upon the record post and spindle as they may warp, especially if the temperature is high.

CYCLE OF OPERATION

INITIATING THE CHANGE CYCLE—Rotating the control knob or movement of the pickup arm which controls the velocity trip arm (176) moves the velocity trip lever (126) so that the idler wheel (163) moves toward the center of the turntable and strikes the cam at the center of the turntable. Meanwhile the trip dog (128) falls in back of the lead pin drop lever (131). The cam at the center of the turntable kicks the idler wheel (163) moving it away from the center post and causing the lead pin dropping lever (131) to move out from under the lead pin (34). The lead pin (34) is pushed upward into the large spiral on the bottom of the turntable by the spring (87). As the turntable rotates, the spiral moves the lead roller (34) towards the spindle causing the swing arm (132) to rotate on its pivot.

PICKUP ARM MOVEMENT—The cam end of the swing arm (132) raises and lowers the pickup arm lift pin (117) as the swing arm (132) is rotated on its pivot. The brake spring (155) slows the swing arm (132) at the end of its cycle to allow gentle lowering of the pickup arm to the record surface.

The pickup arm is rotated on its pivot by the friction spring (61) on the end of the swing arm (132) grasping the pickup arm bracket (135) as the swing arm is rotated on its pivot. At the end of the cycle, the friction spring (61) is moved free of the pickup arm, allowing the pickup arm to rotate freely.

RECORD FEED—As the swing arm (132) approaches the end of the first half of its cycle, it pushes the ejector lever (49) which in turn pushes the ejector push pin which moves the ejector lever (28) to operate the 7–10 inch and the 12-inch push plate (152) and (10) respectively.

PICKUP ARM INDEXING—When the 10-inch or 12-inch spindle is inserted in the center of the turntable, the discriminator lever (160) is moved out of the way so that lever (159) may be pulled against the 10-inch or 12-inch indexing lever (53). The 10-inch or 12-inch indexing lever (53) is controlled by the 7–10 inch record support. If the 7–10 inch record support is in a vertical position, index lever (159) is positioned for 12-inch record index. If the 7–10 inch record support is lowered, the index lever 159 is positioned for 10-inch record index. If either 7-inch spindle is inserted in the center of the turntable, the index lever (159) is stopped by the leg of the discriminator lever (160) which is not moved out of the way by the shorter 7-inch spindles. As the pickup arm is swung towards the spindle by the return action of the swing arm, the pickup arm is stopped by the arm (145) contacting the stepped end of index lever (159). At the end of the change cycle index lever (159) is moved out of the way by the swing arm which allows the pickup arm to be free on its pivot. Lever 170 is a braking lever for the pickup arm during the change cycle.

COMPLETING THE CHANGE CYCLE—At the end of the first half of the cycle, the dropping lever (83) contacts the lever trip bracket and allows the return roller (34A) to raise into the spiral on the underside of the turntable. At the same time, the cam at the inside of the spiral pushes the lead roller (34) down. The lead roller dropping lever (131) is moved into position by its spring and holds the lead roller (34) out of the spiral during the last half of the change cycle. As the turntable rotates, the swing arm (132) is swung back to its starting position. At the end of the last half of the cycle, the return roller (34A) is pushed out of the spiral by the cam at the center of the spiral. The return roller (34A) is held out of the spiral by lever (83).

©John F. Rider

Compliments of www.nucow.com

MODEL P15

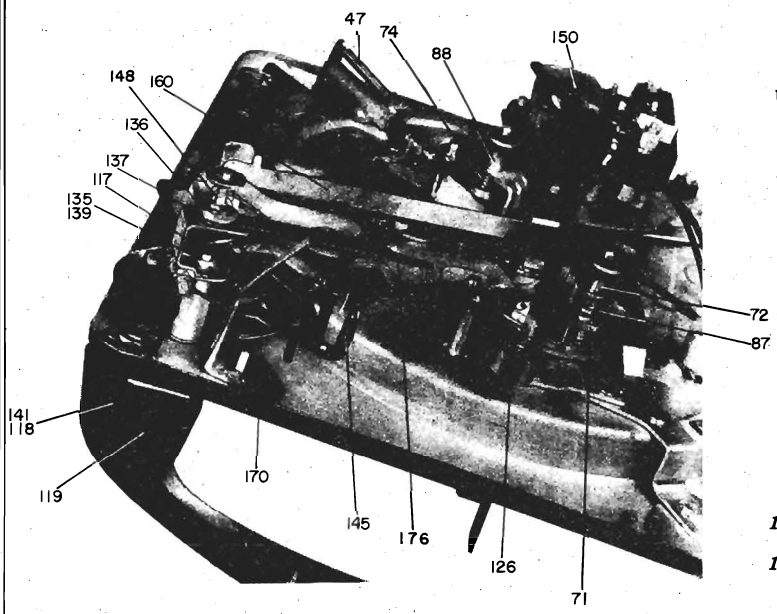

Fig. 4. Bottom View

LUBRICATION

Use Millicott 70K, or equivalent, on the following:

1. On edges of slots where swing arm clamps slide on base plate.
2. Sloping edge of cam dropping lever (83).
3. Between washer which holds swing arm (132).
4. Lever bearing washer on item (49).
5. Pivot pin on item 49.
6. Roller and pivot of lever (83).
7. Index arm lever pivot pin (159).
8. Index lever fulcrum pin and slide washer (53).
9. Spiral channel on bottom of turntable.
10. Slide bolt which pushes lever 28.
11. 7–10 inch record pushoff plate and 12-inch record pushoff plate.

SERVICE ADJUSTMENTS

1. PICKUP ARM DROP POINT ADJUSTMENT.

(A) With the control knob in OFF position, trip dropping lever (131) to trip changer and manually rotate the turntable until index lever (159) is free. Rotate pickup arm lever (145) so that it hits the middle or 10-inch index step of lever (159). (Place 10- or 12-inch spindle in center of turntable and lower 7- and 10-inch record support to a horizontal position.) Loosen the screw which clamps pickup arm pivot post (135) and rotate the pickup arm so that the stylus lands about ⅛-inch in from the outer edge of a ten-inch record. Check for proper indexing on 7-inch and 12-inch records.

(B) Spring on index lever (159) should have enough tension to rotate index lever (159) into position.

2. RECORD SUPPORT POST ADJUSTMENT.

Trip changer and rotate turntable manually until the swing arm has completed the first half of its cycle.

(A) Adjust the screw on lever (49) so that the 12-inch record pushoff plate (10) moves out flush with the ejector housing (9).

3. AUTOMATIC TRIP.

(A) Adjust nut on top of spring to increase or decrease pressure on velocity trip lever (134).

(B) Bend velocity trip lever (134) to contact end of lever (126).

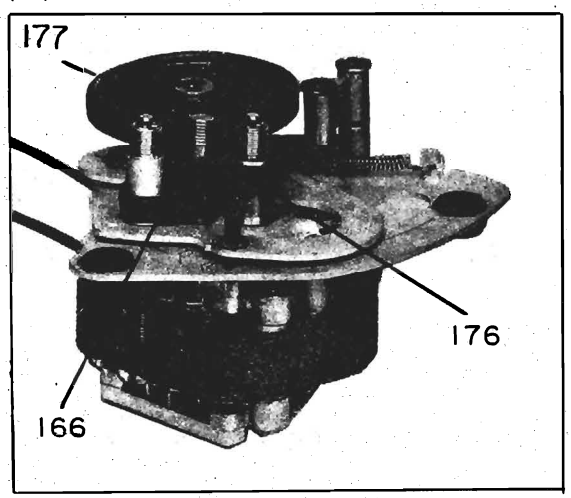

Fig. 5. Three Speed Phono Motor RBH-013

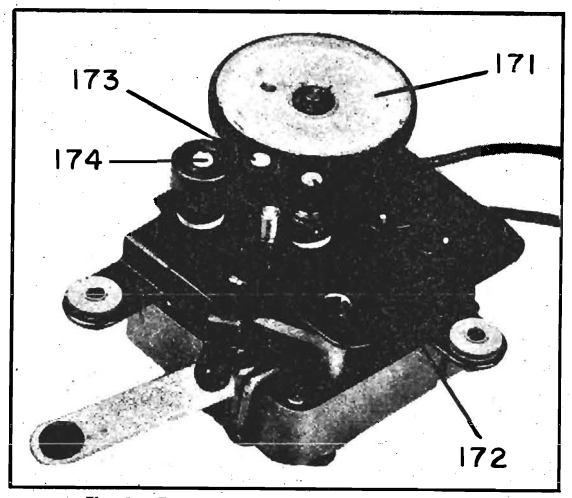

Fig. 6. Three Speed Phono Motor RBH-015

REPLACEMENT PARTS LIST

Cat. No.	Item	Description
RBH-013	150	MOTOR—Three-speed, belt-driven motor, uses two small belts to turn 33⅓ and 45 rpm pulleys. See Fig. 5.
RBH-015	150	MOTOR—Three-speed motor uses bushings for low speeds (used in late production). See Fig. 6.
*RDK-128	36	KNOB—Control knob.
*RHC-032	141	HAIRPIN COTTER—Pickup arm hinge pin.
*RHG-023	103	GROMMET—For motor speed lever.
*RHM-044	84	NUT—Roller bearing speed nut, top of items 72 and 88.
*RHM-045	86	WASHER—Rubber cushion washer, on top of items 72 and 88.
*RHW-020	136	WASHER—Round adjustable steel washer, on top of item 134.
*RHW-021	137	WASHER—Velocity trip arm friction washer, part of item 134.
*RJP-003		PLUG—110 volt, two prong male plug.
RKP-009	168	STYLUS SERVICE KIT.
*RMA-003	1	ARM—Balance arm assembly rest on top of record stack.
*RMA-007	116	LEVER PLATE—"Off-Manual-Auto-Reject" lever plate.
*RMB-014	34, 34A	PIN AND ROLLER—Swingplate lead and return pin.
*RMB-017	139	BALL BEARINGS—3/32-inch diameter, set of 15 used in tone arm pivot, one used in assembling items 126, RML-028 and 129, RML-029.
RMD-003	166	BELT—Small pulley belt.
RMD-004	167	BELT—Large pulley belt.
*RME-001	9	EJECTOR MECHANISM HOUSING—Cast metal case, top side of record changer.
*RML-027	115	LINK LEVER—Reject control lever linked to item 116.

©John F. Rider

Compliments of www.nucow.com

Cat. No.	Item	Description
*RML-028	126	VELOCITY TRIP LEVER—Lower assembly consists of: lever, flat spring stop, balanced fulcrum, and pivot pin
*RML-029	129	VELOCITY TRIP LEVER—Upper assembly consists of: lever, trip dog, and trip dog pin
*RML-030	131	DROP LEVER—Operates lead pin and roller, item 34
*RML-038	151	MOTOR SPEED LEVER ASSEMBLY—For motor RBH-013
*RML-039	158	RBH-015 MOTOR SPEED LINK
*RML-040	159	LEVER—Index ratchet arm lever
*RML-041	160	INDEX—7-inch record discriminator lever
RML-050	170	BRAKE LEVER
*RMM-064	48	WASHER—Lever spacer washer on item 49
*RMM-065	71	WASHER—Shoulder washer on item 34
*RMM-066	72, 88	SPACER—For item 34 or item 34A
*RMM-067	89	CAM—Swing plate return pin locking washer
*RMM-070	8	HINGE BRACKET—For items 1 and 153
*RMM-071	10	PLATE—12-inch record push-off plate
*RMM-072	53	INDEX LEVER—10-inch record index control
*RMM-076	53A	WASHER—Slide washer beneath item RMM-077
*RMM-077	53B	PIN—Index lever fulcrum pin fastens item 53 to record changer deck
*RMM-080	57A	PIN—Change lever fulcrum pin, part of item 57
*RMM-108	102	LEVER—Motor-speed lever, part of control changing from 33 ⅓, 45 and 78 rpm for RBH-013
*RMM-111	106	WASHER—Friction washer, part of item 105
*RMM-122	128	TRIP DOG—Part of item 129, RML-029 (trips item 131, RML-030)
*RMM-135	146	SPACER—Short motor spacer at base of motor for RBH-013 motor
*RMM-136	147	SPACER—Long motor spacer at base of motor for RBY-013 motor
*RMM-137	152	7-INCH AND 10-INCH RECORD SLIDE BOLT
*RMM-138	153	7-INCH AND 10-INCH RECORD SUPPORT
*RMM-110	105	LEVER—Motor speed change lever, part of item 102 for Motor RBH-013
*RMP-012	7	PIN—Hinge pin for item 8
*RMP-016	50	PIN—Lever fulcrum pin, for item 49
*RMP-019	117	PICKUP ARM LIFT PIN—Part of item 162
*RMP-020	118	PICKUP ARM HINGE PIN—Part of item 162
*RMP-022	127	PIN—Hinge pin, for trip dog on item 129
RMP-024	176	LEVER—Velocity trip lever
RPX-050	164	G-E DUAL PICKUP
*RMS-131	5	SPRING—Ejector compression spring for 10-inch push-off plate
*RMS-134	25	SPRING—For 10-inch record support
*RMS-136	47	SPRING—Ejector arm tension spring
*RMS-138	61	SPRING—Two friction springs on 132
*RMS-139	70	RING—Retaining ring engages item 132 swingplate assembly
*RMS-140	74, 87	SPRING—Compression spring on item 34
*RMS-142	79	SPRING—Cammed dropping lever tension spring on item 83
*RMS-144	92	SPRING—Mounting spring on record chassis
*RMS-146	66	SPRING—Selector lever index spring
*RMS-185	119	SPRING—Pickup arm spring, part of item 162
*RMS-187	130	SPRING—Used with drop lever, item 131
RMS-205	175	SPRING—Tension spring for idler wheel for RBH-015
*RMS-206	148	SPRING—Velocity trip lever clutch spring
*RMS-207	155	SPRING—Large brake spring stops swing arm at end of cycle
*RMS-208	156	SPRING—Brake spring (wide black spring)
*RMS-209	161	SPRING—Index discriminator lever spring, part of item 160 assembly
*RMT-016	125	TURNTABLE
*RMU-060	154	SPINDLE—Off-set spindle for 10- and 12-inch records
*RMW-059	163	IDLER WHEEL—On velocity trip lever assembly
RMW-060	171	IDLER WHEEL—For RBH-015 motor
RMW-061	172	BUSHING—Low speed, 33 ⅓ rpm
RMW-062	173	BUSHING—Medium speed, 45 rpm
RMW-063	174	BUSHING—High speed, 78 rpm
RMW-066	177	IDLER WHEEL—For RBH-013
RMX-111	28	EJECTOR PIVOT CHANNEL SUB-ASSEMBLY
RMX-112	49	LEVER ASSEMBLY—Ejector idler lever assembly
*RMX-114	83	LEVER ASSEMBLY—Dropping lever assembly for swingplate return pin
*RMX-142	132	SWINGPLATE ASSEMBLY—Operates pickup arm lever and ejector idler lever, item 49 (assembly includes all attached parts)
*RMX-144	135	PIVOT POST—Pickup arm pivot post
RMX-161	145	ARM—Index arm assembly
RMX-162	149	SPINDLE—10- and 12-inch spindle post assembly
RMX-163	157	SPINDLE—1½ inch spindle post assembly
RPA-013	162	ARM—Pickup arm assembly
RPJ-010	165	REPLACEABLE STYLUS ASSEMBLY
RSW-052	94	SWITCH—Phono motor switch

*Used on previous record changers.

TROUBLE SHOOTING CHART

SYMPTOMS	REMEDIES OR CAUSES
RECORD SELECTION	
1. Records fail to drop.	1. Check adjustment 2A. Check to see that 7–10 inch record support rests on the edge of the selector housing (9) and not on the 12-inch record pushoff plate. Check to see that ejector spring (47) returns levers (49) and (28) to the neutral position at the end of each cycle.
2. More than one record drops.	2. Check slider at top of 10- and 12-inch spindle to see that it is free to slide up and down.
PICKUP ARM MOVEMENT	
1. Pickup arm lands incorrectly.	1. Check adjustments 1A, 1B. Check operation of levers 159, 160 and 53.
2. Pickup arm descends onto record too fast.	2. Check friction brake spring (155). This spring may be too weak to slow swing arm (132) at the end of cycle.
3. Pickup arm does not lower onto record.	3. Check to see that cam end of swing arm (132) is not bent.
TRIPPING AND CYCLING	
1. Changer fails to trip.	1. Check adjustment 3A and 3B. Clean friction surfaces between velocity trip lever (134) and the friction washers. Clean with carbon tetrachloride or equivalent solvent. Check to see that idler wheel (163) is moved against cam at center of turntable by the velocity trip lever (134) pressing against lever (126) as the pickup arm is moved towards the center of the turntable. Levers 129 and 126 should not bind on their pivot.
2. Changer trips too soon.	2. Check adjustment 3A. Pressure on velocity trip lever may be too great.
3. Changer trips continuously.	3. Check selector lever spring (66). It should return selector lever to auto position from reject.
4. Changer fails to cycle after being tripped.	4. Check to see that lead roller (34) is being pushed upward into spiral on bottom of the turntable by the spring 87.
5. Changer jams at start of change cycle.	5. Check to see that return roller 34A is held out of the spiral by the cam dropping lever (83). During second half of cycle, spring should rotate lever (83) under return roller (34A) collar as it is pushed out of the spiral.
6. Changer action is sluggish.	6. Check lubrication. Check to make sure that slow speed bushings on the motor are not binding in their bearings due to dirt or gummy oil or grease.
MOTOR	
1. Changer is sluggish or motor overheats.	1. (a) Check lubrication (oil may be old or gummy). (b) Low line voltage. (c) Defective motor.
2. Motor rumble heard in record reproduction.	2. (a) Shipping bolts not removed from motor board. (b) Flat spot on idler wheel.

© John F. Rider

Compliments of www.nucow.com

SUBJECT: SUPPLEMENT TO P15

Substitution of RBH-015 motor for RBH-017 and RBH-013 motors in the P15 three-speed record changer. Stock RBH-013 and RBH-017 motors will not be carried as a replacement unit. Parts for RBH-013 and RBH-017 will be stocked and are listed below and in ER-S-P15 parts list. Stock RBH-015 motor as listed in service notes for the P15 will be stocked. Parts for RBH-015 are listed below. RBH-015 motor is shown in Figure 1. RBH-017 motor is shown in Figure 2.

SUBSTITUTION OF RBH-015 MOTOR FOR RBH-017 MOTOR

RBH-017 motor, Figure 2, was used in late production of the P15 record changer. Stock RBH-015 motor may be substituted directly for RBH-017 motor without any change in the mechanism.

SUBSTITUTION OF RBH-015 MOTOR FOR RBH-013 MOTOR

Stock RBH-015 motor may be substituted for RBH-013 motor by changing to a new speed control linkage. All parts for this new linkage are contained in kit RKP-010. Kit RKP-010 contains the following:

1. Link Lever, Cat. No. RML-039
2. Rocker Lever, Cat. No. RMA-011
3. Knob Lever, Cat. No. RMM-110
4. Shoulder Rivet, Cat. No. RMM-080
5. Decal to identify RPM position of knob
6. Small rubber sleeve RMB-022

PROCEDURE.

1. Remove old RBH-013 motor and replace with RBH-015 motor as shown in Figure 3. Motor mounting studs are the same for RBH-015 and RBH-013.
2. Remove connecting lever and linkage between old RBH-013 motor and speed control knob. Save the knob, the flat washer, lockwasher and machine screw which secures lever to the speed control knob.
3. Rivet lever RMA-011 in place as shown in Figure 3 with shoulder rivet RMM-080. A hole is already stamped in the base plate to mount the shoulder rivet as shown in Figure 3.
4. Connect link lever RML-039, as shown in Figure 3, using grommet and rubber sleeve on motor speed change lever pin.
5. Mount lever RMM-110 as shown in Figure 3, using flat washer lockwasher and machine screw and knob. Figures 3 and 4 show the levers in the 45 rpm position.
6. Remove old decal by scraping the numbers off lightly with a razor blade. Replace with the decal as shown in Figure 4.
7. Make switch and plug connections. Connect ground lead between motor and base plate.

CAT. NO.	DESCRIPTION
RKP-010	KIT - Speed change lever kit for converting from RBH-013 motor to RBH-015 motor.
RMA-011	LEVER - Rocker lever for speed control linkage for RBH-015 or RBH-017 motors.
RML-039	LINK - Link lever for RBH-015 or RBH-017 motor with grommet.
RMM-080	RIVET - Shoulder rivet for mounting lever RMA-011.
RMM-110	LEVER - Knob lever for use with RBH-015 or RBH-017 motor.
RMS-205	SPRING - Idler wheel tension spring for RBH-015 motor.
RMS-211	SPRING - Pulley arm index spring for RBH-015 and RBH-017 motors.
RMS-212	SPRING - Idler wheel spring for RBH-017 motor.
RMS-218	LOCK RING - Small lock ring for holding 33 1/3, 45 and 78 rpm speed change pulleys onto spindle.
RMW-060	WHEEL - Idler wheel for RBH-015 motor.
RMW-061	PULLEY - 33 RPM speed change pulley for RBH-015 or RBH-017 motors.
RMW-062	PULLEY - 45 RPM speed change pulley for RBH-015 or RBH-017 motors.
RMW-063	PULLEY - 78 RPM speed change pulley for RBH-015 or RBH-017 motors.
RMW-066	WHEEL - Idler wheel for RBH-017 motor.

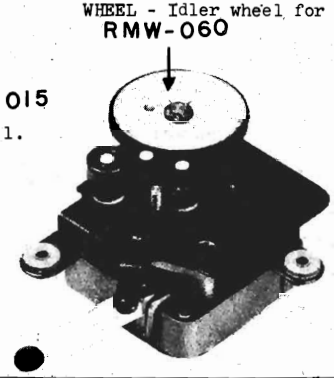

FIGURE 1.

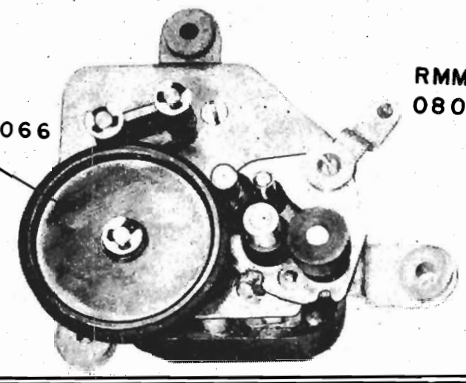

FIGURE 2.

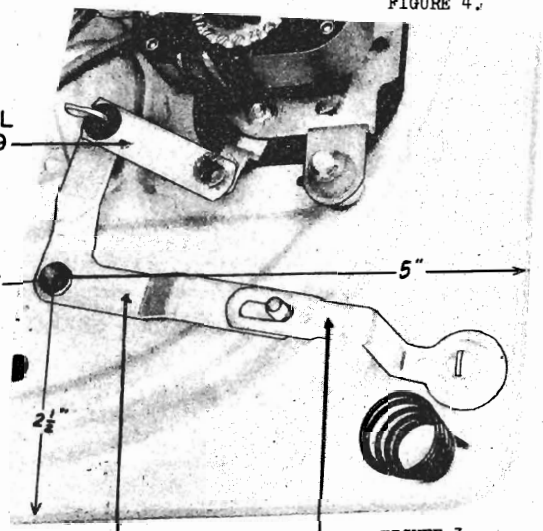

FIGURE 3.

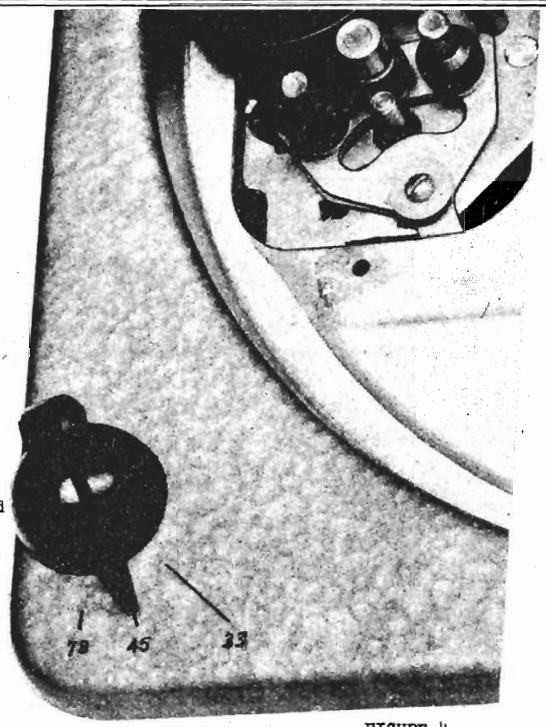

FIGURE 4.

©John F. Rider

Compliments of www.nucow.com

MODEL RC-36

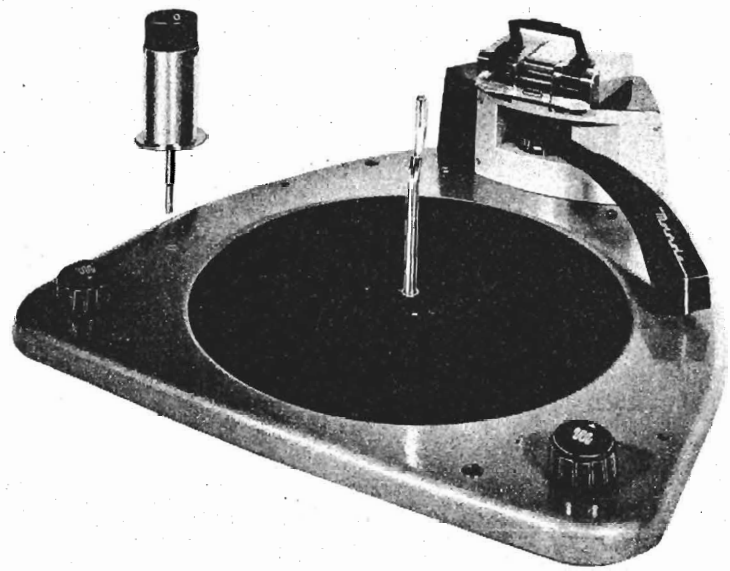

DESCRIPTION

Motorola Model RC-36 Record Changer is a three-speed, single-post changer, designed to play the following records not intermixed:

a. ten 12-inch 33 or 78 RPM records, or -
b. twelve 10-inch 33 or 78 RPM records, or -
c. twelve 7-inch 45 RPM records, or -
d. twelve 7-inch 33 RPM records

A specially designed single-point needle is used for playing both standard and fine-groove records. Two interchangeable record spindles are used - a large diameter spindle for 45 RPM records and a small diameter spindle for all other type records.

The last record to drop to the turntable will be repeated until the changer speed control is turned off. This stops the turntable but the phono motor will continue to run until the "power" or "phono" control on the radio panel is turned off. No power switch is incorporated in the changer. The motor is designed to operate on 105 to 120 volts, 60 cycles AC only.

This changer features a limit stop mechanism which assures correct dropping of the pick-up arm on the lead-in grooves of the records and proper timing of the change cycle after the record has played, regardless of the record size - 7-inch, 10-inch or 12-inch.

OPERATION

PHONOGRAPH CONTROLS

SPEED. The SPEED control determines the speed at which the turntable revolves. You must set this control to the position corresponding to the playing speed of the records you wish to play, viz., record speed 33 RPM, SPEED control to 33; record speed 45 RPM (large center-hole records), SPEED control to 45; or record speed 78 RPM, SPEED control to 78.

CAUTION: The SPEED control can only be moved clockwise from a playing speed position, but may be moved counterclockwise or clockwise, one position, from an OFF position. To stop turntable - rotate SPEED control clockwise.

REJECT. The REJECT control is momentarily turned clockwise and released to start playing action or to reject a record before it has completely played.

OPERATING PROCEDURE

1. Turn the radio power switch "on" and the phono-radio control to the "phono" position.

2. Select the appropriate center post for the records you desire to play.

   a. Two spindles are provided; one spindle for small-hole records and one for large-hole records.

   b. To play small center-hole records, insert the small diameter spindle into the hole in the center of the turntable and rotate the spindle until the pin of the spindle drops into the slot in the turntable bushing.

   c. To play large center-hole records, insert the large diameter spindle into the turntable hole and turn the spindle counterclockwise until the spindle reaches a stop. NOTE: If the two metal separator discs of the large spindle are seen protruding from the spindle, turn the spindle shaft until they disappear inside the spindle, then insert the spindle into the turntable.

   d. To remove a spindle from the turntable, merely lift the spindle straight up from the turntable.

© John F. Rider

Compliments of www.nucow.com

MODEL RC-36

3. Adjust the RECORD SUPPORT to the correct position according to the size record you desire to play.

   a. Three positions of the record support are provided, i.e., a separate position for playing 7-inch, 10-inch, and 12-inch records (see Figure 2).

   b. To adjust the RECORD SUPPORT press down on the RECORD SUPPORT RELEASE and move the RECORD SUPPORT to the correct position according to the size records being played. The RECORD SUPPORT will lock in position (see Figure 1). NOTE: Although the ledge of the RECORD SUPPORT is not used when playing 7-inch 45 RPM records, the RECORD SUPPORT must be in the 7-inch playing position.

4. Load the records.

   a. Raise the RECORD CLAMP to a vertical position.

   b. Place a stack of records over the center post in the desired sequence, with the last record to be played on top.

   c. Rest the records on the ledge of the RECORD SUPPORT and on the off-set of the spindle when playing small-hole records. If you are playing large-hole records, place the records over the spindle and rest them on the off-sets of the large spindle.

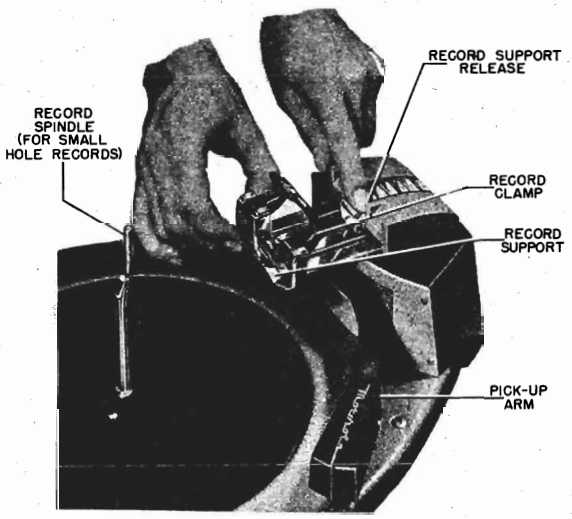

To adjust the RECORD SUPPORT, press down on the RECORD SUPPORT RELEASE and move the record support to the desired position.

FIGURE 1. RECORD SUPPORT ADJUSTMENT

   d. Gently lower the RECORD CLAMP on the records. NOTE: DO NOT LOWER THE RECORD CLAMP WHEN PLAYING 7-INCH 45 RPM RECORDS.

5. Adjust the SPEED control to the position corresponding to the record speed of the records you are playing.

6. Momentarily turn the REJECT control clockwise.

   a. The bottom record will now drop to the turntable, the pick-up arm will lift, swing in, and drop to the turntable; record playing will now begin.

   b. The REJECT control may be turned momentarily clockwise to reject a record before it has completely played. NOTE: Never touch the pick-up arm while the record changer is in a changing cycle.

7. At the conclusion of playing and as the last record is being repeated, lift the pick-up arm and move it to the right.

8. Turn the SPEED control clockwise to the OFF position. NOTE: This stops the turntable, but the motor will continue to run until turned off either with the "phono" control or "power" switch on the radio panel.

9. Turn the power switch on the radio panel "off".

TO UNLOAD RECORDS

1. Raise the RECORD CLAMP.

2. Lift the records straight up from the turntable. Do not apply pressure to the top record. Keep your thumbs free. NOTE: When removing 45 RPM records, if the two metal separator discs of the large spindle are seen protruding from the spindle, lift the spindle, with the records, from the turntable and turn the spindle shaft until the discs disappear inside the holder before removing records.

©John F. Rider

Compliments of www.nucow.com

A. To play 7-inch small-hole records, press down on the RECORD SUPPORT RELEASE and move the RECORD SUPPORT to the extreme outward position. Rest the records on the ledge of the RECORD SUPPORT and on the off-set of the small spindle.

B. To play 10-inch records, press down on the RECORD SUPPORT RELEASE and move the RECORD SUPPORT to the middle position (1-1/2 inches in from the extreme outward position). Rest the records on the ledge of the RECORD SUPPORT and on the off-set of the small spindle.

C. To play 12-inch records, press down on the RECORD SUPPORT RELEASE and move the RECORD SUPPORT to the extreme inward position. Rest the records on the ledge of the RECORD SUPPORT and on the off-set of the small spindle.

D. To play 7-inch large-hole records, press down on the RECORD SUPPORT RELEASE and move the RECORD SUPPORT to the extreme outward position. Rest the records on the off-set of the large spindle.

FIGURE 2. RECORD SUPPORT IN RECORD PLAYING POSITIONS

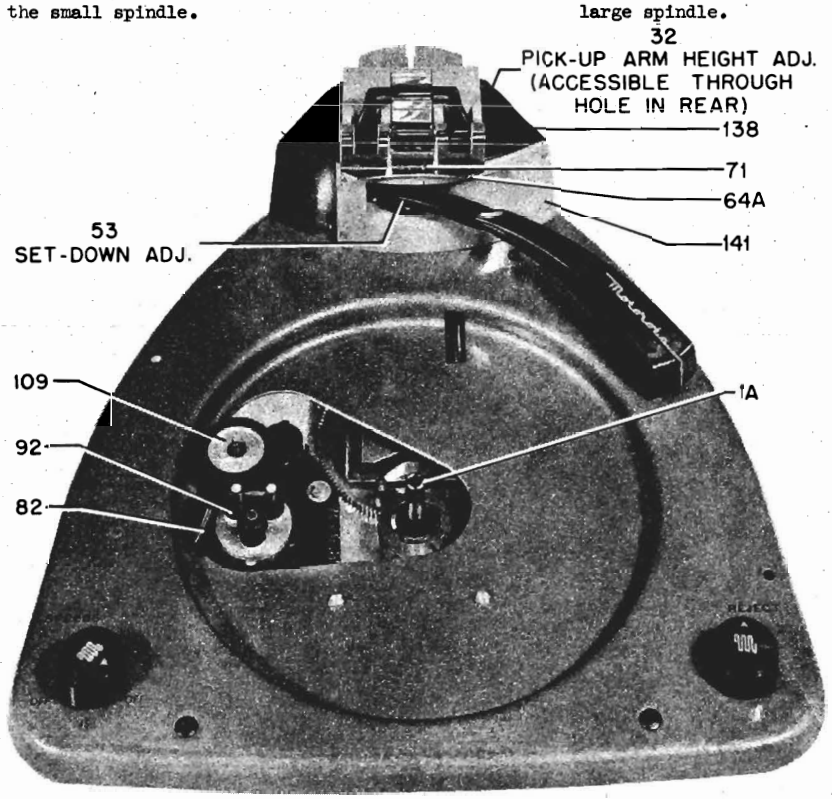

FIGURE 3. TOP VIEW OF RECORD CHANGER WITH TURNTABLE REMOVED

©John F. Rider

Compliments of www.nucow.com

MODEL RC-36

THEORY OF OPERATION

Refer to Figures 3, 4, 5, 6, 7 & 8 for location of the various parts described in this section. This will enable you to readily follow the operation of this unit.

The turntable is rim-driven. Power is transmitted to the turntable through an idler wheel (109) and a speed control turret (92). The speed control turret is operated by means of a 3-gear train, linking the turret to the speed change shaft assembly (87) which is manually operated by the speed control knob on the record changer base. This control has six positions - 78, 45 & 33-1/3 RPM and three "off" positions - controlled by an ingenious six-point cam (87A). This cam permits easy selection of turntable speeds, yet prevents the speed control turret (92) from jamming idler wheel (109) against turntable and causing flat-spots. The speed control can only be moved clockwise from a playing speed position, but may be moved counterclockwise or clockwise, one position, from an OFF position.

During a playing of a record, only the motor assembly (82) and turntable (119) are in operation. Balance of the mechanism is inoperative until the change cycle starts.

THE CHANGE CYCLE

The change cycle may be initiated in two ways - by means of the pick-up arm entering the cut-off grooves in the record or by manual operation of the reject knob. Power for the change cycle is obtained from the turntable.

Prior to a change cycle and while the turntable revolves, the weighted end of the drive clutch lever (118) is resting on the trip lever (21A). When the pick-up arm needle finishes playing a record and enters the cut-off groove, the trip arm (36A), attached to pick-up arm shaft (33), pushes the trip flag bracket (21B) - or when the changer's "reject" control is turned, the reject arm (4), acting through the reject rod (134), pushes the trip flag bracket (21B). This action releases trip lever arm (21C) allowing the trip lever spring (22) to pull the trip lever (21A) away from the drive clutch lever (118), causing the weighted end (118A) of the drive clutch lever (118) to lower and, consequently, the drive dog (118B) of the drive clutch lever contacts the drive screw (120) on the turntable and the change cycle begins.

When the drive clutch lever (118) engages the drive screw (120) and as the turntable continues to revolve, this revolving action causes the cycle gear (9) to turn through the drive gear (117). As the cycle gear revolves, its roller (9A) moves the slide channel (21) back and in doing so, the pick-up arm shaft (33) rides up on the incline (21D) of the slide channel, raising the pick-up arm. As the slide channel (21) continues its backward motion, the clutch fingers (21F) will engage the set-down arm assembly (36) to swing the pick-up arm in a direction away from the spindle. At the extreme backward travel of the slide channel (21) the push-off lever (60C), which rides in the slot (21E) of the slide channel, is actuated and this in turn, through the push-off link (72) moves the record push-off lever (71) pushing the lower record off the record support

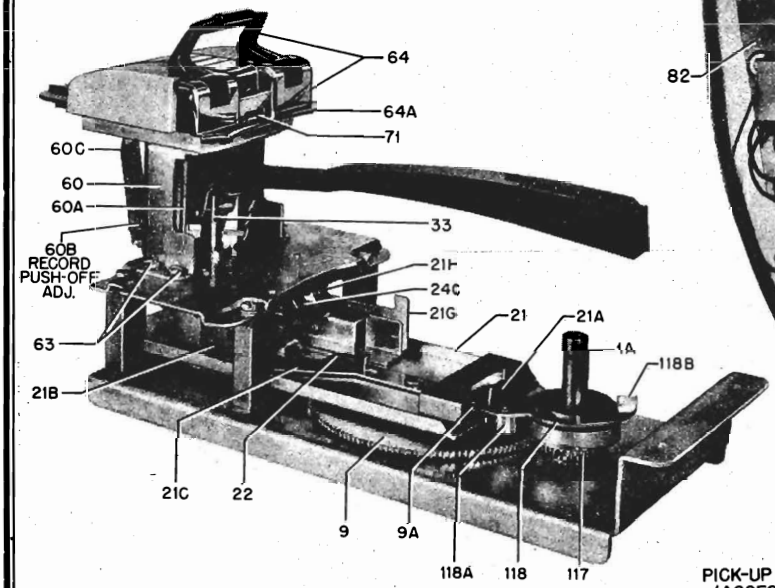

FIGURE 5. VIEW OF RECORD CHANGER WITH BASE & MOTOR ASSEMBLY REMOVED

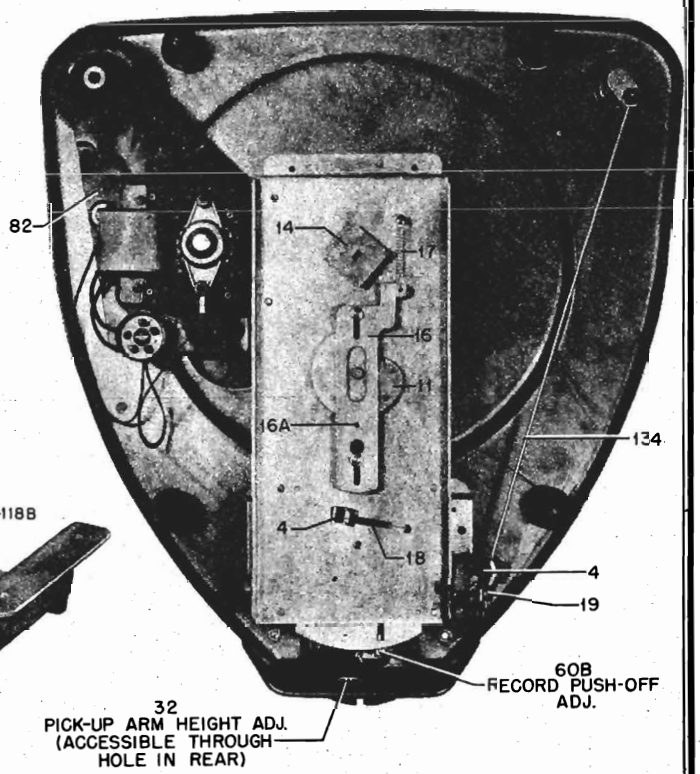

FIGURE 4. BOTTOM VIEW OF RECORD CHANGER

© John F. Rider

Compliments of www.nucow.com

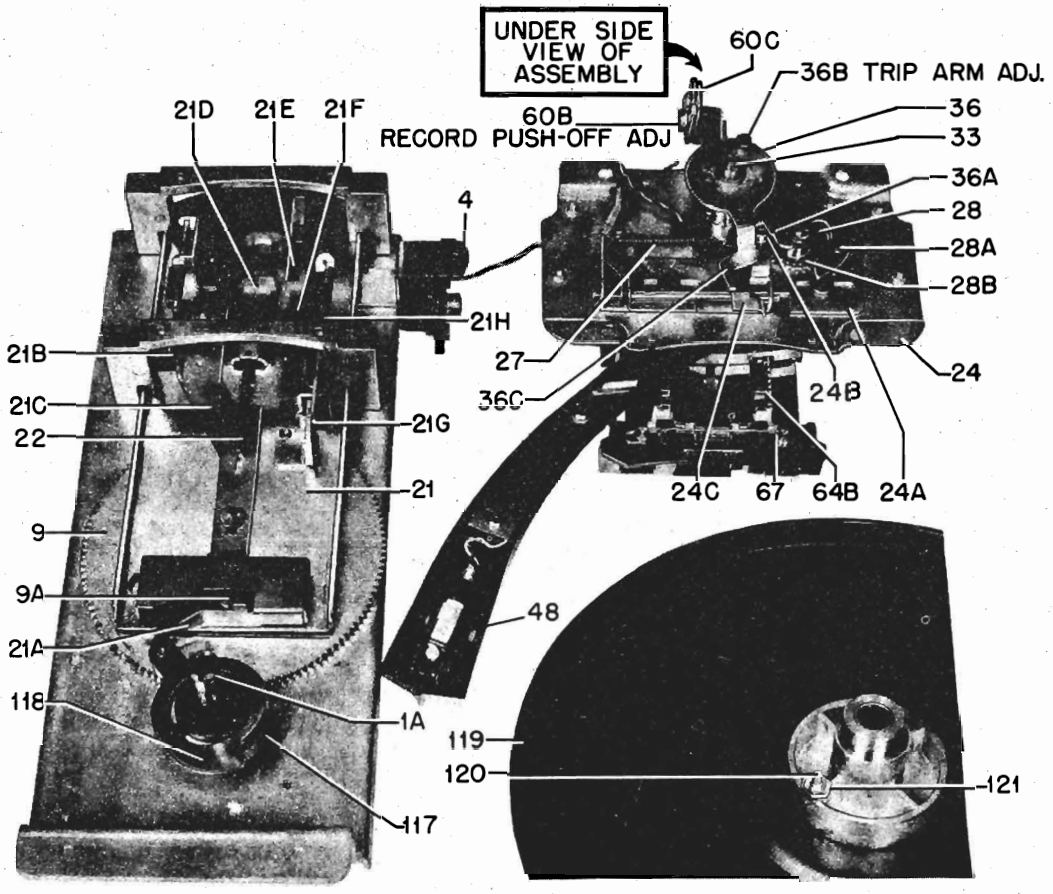

FIGURE 6. DISASSEMBLED VIEW OF RECORD CHANGER MECHANISM

(64A) thus permitting it to drop to the turntable. At this same time, the restoring lever (21G) lowers the set-down flag (24C) (which will index the pick-up arm when the slide channel makes its forward motion) also the trip slide cocking stud (6) engages the trip arm (21C) with the trip flag (21B) to set it for the next cycle and to prevent re-cycling when the slide channel completes its cycle. At this point one-half of the change cycle is completed.

The cycle gear (9) will continue to rotate until it completes one revolution. As it continues to revolve, the slide channel (21) will move forward and the clutch fingers (21F) that are still engaging the set-down arm assembly (36) will now swing the pick-up arm back toward the record spindle until the set-down arm (36C) contacts the set-down flag (24C); this controls the pick-up arm set-down point. While the arm is being held over the set-down point by (24C), continued rotation of the cycle gear (9) makes the pick-up arm shaft (33) ride down the incline (21D), lowering the pick-up arm onto the record.

As the slide channel (21) approaches the end of the cycle (fully forward position) the set-down flag (24C) is moved out of the way by the restoring lever (21H) to give the pick-up arm complete freedom of movement during playing of the records.

When the slide channel moves fully forward, the drive clutch lever (118) rides up the trip lever incline (21A) and disengages the drive clutch lever dog (118B) from the drive dog screw (120) in the turntable, thus ending the cycle.

PICK-UP ARM SET-DOWN POINT

The point at which the pick-up arm drops to the turntable for either 7-inch, 10-inch or 12-inch records is determined by the position of the set-down flag (24C).

When the record support assembly (64) is adjusted for a specific size record, the movement of the record support causes rotation of the gear and pinion shaft assembly (60A) through the rack gear (64B) on the record support. Since the gear and pinion shaft assembly (60A) engages the set-down gear (28B) and the set-down cam (28A) is attached to the set-down gear, any movement of the record support will cause the set-down cam to turn. The set-down cam stud (24B), on the slide plate and spring assembly (24A), rides with the set-down cam due to the tension of the slide plate spring (27); therefore, any action of the set-down cam will affect the position of the set-down flag (24C).

45 RPM RECORD DROP

The 45 RPM spindle shaft, when dropped in the turntable center hole, fits into the slot in the timing stop (14).

When the change cycle begins and the slide channel (21) is making its backward movement, the reject plate (16)

© John F. Rider

Compliments of www.nucow.com

MODEL RC-36

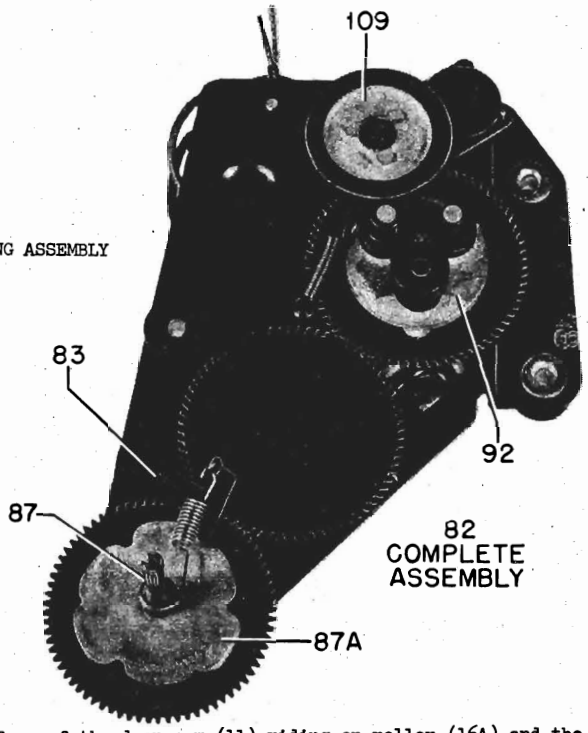

FIGURE 7. MOTOR & SPEED CHANGING ASSEMBLY

moves forward due to the eccentric form of the drop cam (11) riding on roller (16A) and the tension of the spring (17), pulls the reject plate (16) forward until it contacts timing stop (14), preventing it from rotating. Since the turntable with the 45 RPM spindle continues to rotate and the timing stop (14) and spindle shaft (153) remain stationary, the two pinion gears (155) in the upper section of the spindle rotate around the spindle shaft (153) gear. The eccentric extending from the upper end of the two pinion gears (155) runs in a slot in the molded record supports to produce the necessary action which causes the supports to move in against the tension of spring (156). As the plastic record supports recede, the separator discs mounted above each record support separate the lower record of the stack and support the remaining stack while the lower record drops to the turntable. With continued rotation of the spindle the record supports, due to the action of spring (156), will move out to support the record stack, while the separator discs recede into the spindle.

When the slide channel (21) is making its forward movement, the reject plate (16) moves back releasing the timing stop (14) allowing the timing stop and the spindle shaft to revolve for the playing of the record.

LUBRICATION

Factory lubrication should be sufficient for a long period of service.

When lubrication is required use only the following lubricants in the places specified:

Part	Lubricant
Turntable Bearing	- "All-State" Front Wheel Bearing Grease (car lubricant)
Slide Channel (21), Slide Plate & Spring Assembly (24A)	- Moly-Kote (Alpha Corp type M) (Motorola Part No. 11M490126)
All other moving parts	- Silicone High Temperature Lubricant (Dow Corning Corp #DC-44) (Motorola Part No. 11M476079)

DO NOT LUBRICATE THE FOLLOWING PARTS:

Trip flag bracket (21B)

Trip lever assembly (21C)

If any oil or grease should come in contact with the idler wheel tire, inside rim of turntable, or any of the motor drive surfaces, clean with carbon-tetrachloride.

MAINTENANCE

It is advised that the service man thoroughly study and familiarize himself with the operation of the integral parts of the record changer and to carefully analyze the trouble before attempting to make any adjustments or to do any repair work on the record changer. The changer, after it leaves the factory, will not require any periodic adjustments, except to adjust the needle set-down point, if the needle or cartridge is replaced.

Should it become necessary to remove the changer from the cabinet, or the changer mechanism from the base plate, the service man is further advised not to unnecessarily remove parts or sections of the changer, since the changer then will require adjustment.

In order for the changer to operate properly, it is important that the changer remain level, either mounted in the cabinet or, while repairing the changer, on the bench. If the changer is working satisfactorily, leave it alone.

© John F. Rider

Compliments of www.nucow.com

MODEL R C-36

ADJUSTMENTS

NEEDLE SET-DOWN ADJUSTMENT

A template, (Motorola Part No. 54B792330) furnished with the record changer, is required to index the needle to the correct set-down point after a needle or cartridge has been replaced. If a template is not available, you may improvise one as follows:

1. Set a compass to 3-5/16 inches and draw a circle on a piece of cardboard.
2. Punch out a 17/64 inch diameter hole at the exact center of the circle.

To index the needle to the correct set-down point:

1. Place the small diameter spindle in the turntable and the template over the spindle.
2. Move the record support to the 7-inch record playing position. NOTE: When the needle is set correctly for this position, the index will be automatically set for 10-inch and 12-inch records.
3. Rotate the turntable by hand and turn the reject control to start the change cycle. Watch the needle carefully. It must land on the curved line of the template.
4. If the needle does not land on the line, adjust the set-down setscrew (53) located on the pick-up arm (see Figure 11). Turn the setscrew clockwise to move the pick-up arm in a direction towards the spindle, or turn the setscrew counterclockwise to move the pick-up arm in a direction away from the spindle. IMPORTANT: Turn the screw very slightly and repeat step 3. Repeat this procedure until the needle lands exactly on the curved line.

PICK-UP ARM HEIGHT ADJUSTMENT

If the pick-up arm strikes the bottom record of a stack of records resting on the 45 RPM spindle or the pick-up arm does not rise sufficiently to clear a 1-inch stack of records after they have dropped to the turntable, proceed as follows:

1. Remove the cabinet back or remove the record changer from the cabinet, as required, to gain access to the rear of the record changer.
2. The height adjustment screw (32) is accessible through a hole in the rear of the record support housing (138) (see Figure 3).
3. If insufficient clearance is noted, turn the height adjustment screw (32) clockwise to raise the arm, or counterclockwise to lower the arm, as required.

PUSH-OFF LEVER ADJUSTMENT

If a record fails to drop to the turntable, check the position of the record push-off lever (71) on the record support during a change cycle; it should protrude a minimum of 1/32 inch from the record support during the record dropping portion of change cycle. If adjustment is required, proceed as follows:

1. Remove the cabinet back or remove the record changer from the cabinet, as required, to gain access to the rear of the record changer.
2. Turn the reject knob to place changer in cycle and rotate turntable by hand until record push-off lever (71) is at its point of maximum forward travel.
3. Turn the push-off adjustment screw (60B) until push-off lever (71) protrudes 1/32 inch beyond lip (64A) of record support.

TURNTABLE DRIVE PIN ADJUSTMENT

If a "clicking" noise is heard while a record is playing, the drive dog adjusting screw (120) on the bottom of the turntable is touching the drive dog (118B). To remedy:

1. Remove the turntable. NOTE: Do not remove the drive clutch lever (118); also do not lose the bearing washer (115).
2. Loosen the hex nut (121) and turn the drive dog adjusting screw (120) counterclockwise to bring the screw further away from the drive dog. CAUTION: Do not turn the screw too much, since the screw will not engage the drive dog and, as a consequence, the changer will fail to cycle.
3. Tighten the hex nut (121).
4. Replace the turntable.

© John F. Rider

Compliments of www.nucow.com

MODEL RC-36

TRIP ARM ADJUSTMENT

If the mechanism does not trip after playing a record or trips before a record has completed its play, the set-down arm (36) requires adjustment.

1. Readjust the needle set-down setscrew (53) (see paragraph on NEEDLE SET-DOWN ADJUSTMENT).
2. If adjusting the setscrew in step 1 does not correct the fault, remove the cabinet back or remove the record changer from the cabinet, as required, to gain access to the rear of the record changer.
3. Turn the set-down adjustment screw (53) until the end of the setscrew is even with the pick-up arm.
4. Adjust the trip arm adjustment stud (36B) (this is an eccentric stud) sufficiently so that mechanism trips correctly.
5. Readjust the needle set-down setscrew (53) (see paragraph on NEEDLE SET-DOWN ADJUSTMENT).

PARTS REMOVAL AND REPLACEMENT

TO REMOVE THE RECORD CHANGER FROM THE CABINET

1. Disconnect the power and phono input leads from the record changer.
2. Loosen and remove the four Phillips head screws (123) on the top of the record changer and pull the record changer straight up from the cabinet.

NEEDLE REPLACEMENT

Use only a Motorola needle; do not use any other needle, as damage to the records or crystal cartridge will result. IMPORTANT: After needle is replaced, check the set-down point as outlined in NEEDLE SET-DOWN ADJUSTMENT.

Two types of needles and crystal cartridges are being used. Look at your needle and cartridge!

IMPORTANT: The needle should be held in the cartridge perpendicular to the surface of the turntable.

1. If the needle is secured to the cartridge with a small, round knurled nut (see Figure 9), loosen the nut and remove the needle from the cartridge. Replace with Motorola needle, Part No. 59K691908. Insert the replacement needle in the cartridge needle receptacle and tighten the knurled nut.
2. If the needle is not held in place with a knurled nut, merely pull the needle from the cartridge using your fingers or pliers (see Figure 10). Replace with Motorola needle, Part No. 59K691909. The replacement needle is partly encased in a small guard to protect the needle point; push the needle into the cartridge needle receptacle and remove the guard. Friction will hold the needle in position.

FIGURE 9.

FIGURE 10.

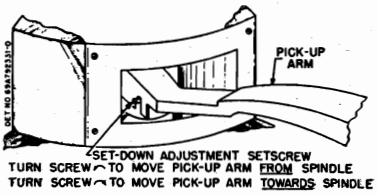

FIGURE 11.

CARTRIDGE REPLACEMENT

Two types of cartridges are being used, they are interchangeable. To remove the cartridge, merely remove the cartridge retainer clip (48) and disconnect the pick-up leads. IMPORTANT: After cartridge is replaced, check the needle set-down point as outlined in NEEDLE SET-DOWN ADJUSTMENT paragraph.

TO REMOVE THE TURNTABLE

1. Remove the turntable retaining clip.
2. Lift the turntable straight up from the base plate. Be sure the bearing (116) and bearing washer (115) do not get lost or dirty.
3. When replacing the turntable, it will be necessary to center the drive clutch lever (118) and bearing washer (115) to allow proper seating of the turntable over the spindle post.
4. Replace the turntable retaining clip.

© John F. Rider

Compliments of www.nucow.com

TO REPLACE THE DRIVE CLUTCH LEVER

1. Place the changer mechanism in the rest position (slide channel (21) in full forward position) with the trip flag bracket (21B) engaged in the trip lever arm (21C).

2. Place the drive clutch lever (118) in position with the weighted end (118A) of the drive dog resting on the trip lever (21A).

TO REMOVE THE DRIVE GEAR

1. Remove the turntable and drive clutch lever (118).

2. Lift the drive gear (117) straight up from the spindle post.

3. When replacing the drive gear (117) it is important that the changer be timed correctly. To time, position cycle gear so that cycle gear roller (9A) is directly in line with the spindle post (1A) and pull the trip lever (21A) forward so that trip flag (21B) falls in and locks it in position. Now place the drive clutch lever (118) in position on drive gear (117) and mesh the gears so that weighted end of clutch lever (118) rests on the lowest edge of the trip lever (21A) incline. Check the timing by playing a stack of 45 RPM records. If a record of the stack fails to drop during a cycle, move the drive gear (117) one "tooth" and play another stack of records to again check the timing.

TO REMOVE THE RECORD SUPPORT HOUSING COVER AND RECORD SUPPORT HOUSING

1. Remove the four Phillips head screws (142) that secure the housing cover (141) to the housing (138).

2. Remove the four hex head screws (140) and four washers (139), accessible from the bottom of the changer, that secure the housing to the base plate.

TO REMOVE THE COMPLETE CHANGER MECHANISM AND MOTOR ASSEMBLY

1. Disconnect the power and phono leads.

2. Remove the speed control knob.

3. Disconnect the reject rod (134).

4. Remove the turntable and drive clutch lever (118) from the changer.

5. Remove the record support housing cover (141) and housing (138).

6. From the bottom of the changer, remove one machine screw (131) securing the motor assembly (82) to the base plate (122).

7. Remove the four Phillips head lockscrews (130).

8. Remove the two hex head screws (129).

TO REMOVE THE MOTOR ASSEMBLY

1. Disconnect the power lead.

2. Remove one machine screw (131) from the bottom of the record changer securing the motor assembly to the base plate.

3. Remove the turntable from the record changer.

4. Remove the two machine screws (114) securing the motor assembly to the changer mechanism.

5. Remove the speed control knob.

PICK-UP ARM MOUNTING PLATE ASSEMBLY REPLACEMENT

Should it ever become necessary to remove the pick-up arm mounting plate assembly (24), the following precautions should be observed when replacing the assembly.

1. Be sure that the hole in the set-down cam (28A) lines up with the hole in the mounting plate and that the set-down cam stud (24B) on the set-down flag (24C) is on the outside of the cam.

2. Be sure that the set-down flag (24C) is in a position so that it can be actuated by the restoring lever (21G).

3. The record support must be in the 12-inch playing position when replaced.

TO REMOVE THE SLIDE HINGE AND SLIDE BRACKET

1. Slide hinge (145) is secured with a spring clip (149). To unlatch the slide hinge: Place a folded piece of paper on both sides of the slide hinge, between the slide hinge and the slide cover (143) and pull the paper forward, simultaneously pulling the slide hinge upwards. See Figure 12.

2. Four machine screws secure the slide bracket (146) to the record support and slide cover (143).

© John F. Rider

Compliments of www.nucow.com

MODEL RC-36

REPLACEMENT PARTS LIST

Ref. No.	Part Number	Description
1	1X691802	Mounting Plate Riveted Assembly (includes items 1 through 8)..
2	7A470234	Bracket, receptacle mtg .....
3	5S7701	Rivet: .122 x 3/16; stl .....
4	45B691361	Arm, manual reject .....
5	5K691478	Rivet, shoulder .....
6	46A691227	Stud, trip slide cocking .....
7	5K26998	Rivet, shoulder .....
8	46A691273	Stud, reject plate slide .....
9	1X691803	Cycle Gear, Shaft & Roller Assembly
10	4A691767	Washer, spring .....
11	45A691256	Cam, record drop (45 RPM) .....
12	4S7569	Washer, flat: 5/16 x .145 x .027; cad pl .....
13	3S7247	Lockscrew: 6-32 x 3/16; slotted hex head machine screw; cad pl ....
14	46A691309	Stop, timing .....
15	42A691462	Clip .....
16	1X691843	Reject Plate & Roller Assembly..
17	41A76925	Spring, coil tension .....
18	41A691489	Spring, manual reject .....
19	9A470260	Receptacle, 1-prong .....
20	3S7506	Screw, sheet metal: #6 x 1/4 PKZ plain hex head; cad pl.....
21	1X691804	Slide Channel Assembly: complete.
22	41A691469	Spring, trip lever arm actuating.
23	41A14244	Spring, tension coil .....
24	1X691962	Set-Down Flag & Pick-Arm Mounting Assembly: complete; includes items 24 through 30 .....
25	41A691258	Spring, set-down flag detent .
26	5S7769	Rivet: .088 x 3/32 stl;.....
27	41A691282	Spring, slide plate .....
28	1X691813	Set-Down Cam & Gear Assembly .
29	4K73809	Washer, "C" .....
30	5A790684	Grommet, rubber .....
31	1X691815	Pick-up Arm Brkt. & Stud Assembly..
32	3A691288	Screw, pick-up arm adj .....
33	47A691221	Shaft, pick-up arm .....
34	46A691268	Pin, pick-up carriage .....
35	3S3858	Setscrew: 4-40 x 1/4 allen head ...
36	1X691816	Set-Down Arm Assembly .....
37	3S9700	Setscrew: 6-32 x 3/16 allen head...
38	46C691431	Counterbalance, pick-up arm.....
39	3S1452	Screw, machine: 4-40 x 1/2 slotted binderhead; cad pl .....
40	1X691817	Pick-up Arm Assembly: includes items 40 through 53 .....
41	45D691428	Arm, pick-up: arm only .....
42	1X691818	Pick-up Cartridge Leads Assembly...
43	9A72670	Contact, pin terminal .....
44	59B691430	Cartridge, crystal: with needle (Shure) .....
45	or 59K691907	Cartridge, crystal: with needle (Electro Voice) .....
46	59K691908	Needle (for 59B691430 cartridge)...
47	59K691909	Needle (for 59K691907 cartridge)...
48	42A691429	Clip, cartridge retainer .....
49	1X691819	Pick-up Arm Plate & Bushing Assem..
50	3S490739	Screw: #4 x 1/4 PKZ Phillips binderhead; cad pl .....
51	3S490535	Screw, machine: 4-40 x 5/16 Phillips flat head; cad pl .....
52	41A691329	Spring, torsion .....
53	3S9710	Setscrew: 4-40 x 5/16 slotted headless .....
54	4K580282	Washer, spring: phosphor bronze.
55	4A16556	Washer, spring .....
56	3S2286	Lockscrew: 4-40 x 3/16 slotted hex head machine screw; cad pl ...
57	46C691368	Block, guide slide .....
58	4S7651	Lockwasher: #8 int; cad pl ...
59	3S2963	Screw, machine: 8-32 x 1-3/4" plain hex head; cad pl .....
60	1X691820	Record Support Housing Assembly: complete with push-off lever & gears .....
61	1X691963	Bracket Lock Assembly .....
62	5S8497	Rivet: .088 x 1/8; stl; nkl pl.....
63	3S7350	Lockscrew: 6-32 x 1/4; slotted hex head machine screw .....
64	1X691824	Record Support & Clamp Assembly: complete; includes items 64 through 70 .....
65	1X691964	Clamp Assembly, record hold-down
66	41A691279	Spring, extension .....
67	41A691795	Spring, push off restoring .....
68	5S691794	Rivet, shoulder .....
69	46A691485	Stud, drive .....
70	46A691243	Pin, spring retainer .....
71	47K691953	Lever, record push-off .....
72	1X691826	Push-Off Link & Bushing Assembly
73	46A691235	Stud, slide locking .....
74	41A691466	Spring, coil .....
75	4S8279	Washer, flat: 5/16 x .125 x .027; cad pl .....
76	4K73809	Washer, "C" .....
77	64B691342	Plate, record rest cover .....
78	3S6932	Screw, machine: 4-40 x 3/16 slotted locking type binderhead .....
79	43K471634	Ball, steel .....
80	42A691405	Clip, ball bearing .....
81	41A691467	Spring, extension .....
82	59D691876	Motor Drive Assembly: complete; includes items 82 through 113..
83	45A691223	Pawl, speed detent .....
84	5K691481	Rivet, shoulder .....
85	37K15125	Grommet, rubber .....
86	5A12105	Eyelet, mounting .....
87	1X691965	Speed Change Shaft Assembly ....
88	44A691219	Gear, speed change .....
89	43A17431	Bushing, collar: brass .....
90	3S7113	Setscrew: 8-32 x 1/4 slab head .
91	41A691280	Spring, pawl extension .....
92	1X691966	Speed Control Turret Assembly: includes items 92 through 97 .....
93	4A691407	Washer, pulley: felt .....
94	42A691438	Clip, pulley retainer .....
95	49A691333	Pulley, speed control (78 RPM)..
96	49K691337	Pulley, speed control (45 RPM)...
97	49A691335	Pulley, speed control (33 RPM)....
98	44A691219	Gear, speed change .....
99	4A691214	Washer, turret spring: phosphor bronze .....
100	3S490530	Screw, machine: 3-48 x 3/16 slotted round head; cad pl .....
101	59C691379	Motor, phono .....
102	28A470534	Plug, cable connector .....
103	29A481785	Lug, ground connector .....
104	4S7657	Lockwasher: #8 ext; cad pl ...
105	3S2957	Screw, machine: 8-32 x 1/2 plain hex head; cad pl .....
106	3A691237	Screw, motor mounting .....
107	41A691284	Spring, motor extension .....
108	1X691967	Idler Wheel Bracket Assembly .
109	49A691277	Wheel, idler .....
110	4A691891	Washer, insulating: rubber ...
111	42A691893	Clip, hair pin .....
112	46A691420	Pin, groove .....
113	41A691281	Spring, idler extension .....
114	3S7279	Screw, machine: 8-32 x 5/8 slotted binderhead; cad pl .....
115	4A691286	Washer, bearing .....
116	43A691278	Bearing, turntable .....
117	44B691354	Gear, drive .....
118	1X691827	Drive Clutch Lever & Weight Assembly
119	1X691978	Turntable Assembly .....
120	3A691225	Screw, drive dog adjusting ..
121	2S7003	Nut, hex: 8-32 x 5/16 .....
122	1X691829	Record Changer Base Assembly: includes items 122 through 128 ...
123	3S488108	Screw, machine: 10-32 x 1-3/8 Phillips flat head; antique copper finish .....
124	4S8214	Washer, flat: 7/8 x .203 x .067

©John F. Rider

Compliments of www.nucow.com

MODEL RC-36

Ref. No.	Part Number	Description
125	35A481870	Mounts, shock:rubber .....
126	43A484295	Sleeve, shock mount:rolled .....
127	2A484296	Nut, shock mount: tapered tee ..
128	37A17361	Grommet, rubber .....
129	3S7205	Lockscrew: 8-32 x 1/4 slotted hex head machine; cad pl .....
130	3S490533	Lockscrew: 6-32 x 1/4 Phillips binderhead machine screw; antique copper finish .....
131	3S7279	Screw, machine: 8-32 x 5/8 slotted binderhead; cad pl .....
132	1X691830	Reject Lever & Shaft Assembly
133	4A11722	Washer, "C" .....
134	47A691464	Rod, reject .....
135	43A691917	Sleeve, rubber .....
136	2A691432	Nut, speed .....
137	36B691483	Knob, control .....
138	15D691488	Housing, record support .....
139	4S8279	Washer, flat: 5/16 x .125 x .027; cad pl .....
140	3S490531	Screw: #4 x 3/8 PKF plain hex head; cad pl .....
141	15C691393	Cover, housing .....
142	3S490532	Screw: #2 x 3/8 PKF Phillips oval head; nkl pl .....
143	15C691395	Cover, slide .....
144	42A691415	Fastener, slide cover .....
145	55B691391	Hinge, slide release: chrome pl....
146	7B691418	Bracket, slide release hinge .....
147	47A691424	Shaft, slide release hinge .....
148	3S490352	Screw, machine: 2-56 x 5/32 slotted binderhead; cad pl .....
149	41A691463	Spring, retainer .....
150	4S8406	Lockwasher: #2 int; cad pl ...
151	47C691499	Spindle, record: 33 & 78 RPM.....
152	1X691832	Spindle, record: 45 RPM: complete.
153	1X691834	Drive Gear & Shaft Assembly .....
154	42A691283	Clip, shaft .....
155	1X691835	Record Support & Separator Assembly
156	41A691406	Spring, compression .....
157	1X691836	Center Post Cap & Spring Assembly .
158	41A691253	Spring, spindle cap .....
159	3S7164	Screw, machine: 6-32 x 1/4 slotted binderhead; cad pl .....
160	4S7666	Lockwasher: #6 ext; cad pl ...
161	3S488082	Screw, machine: 6-32 x 1-3/4" slotted round head; cad pl ..

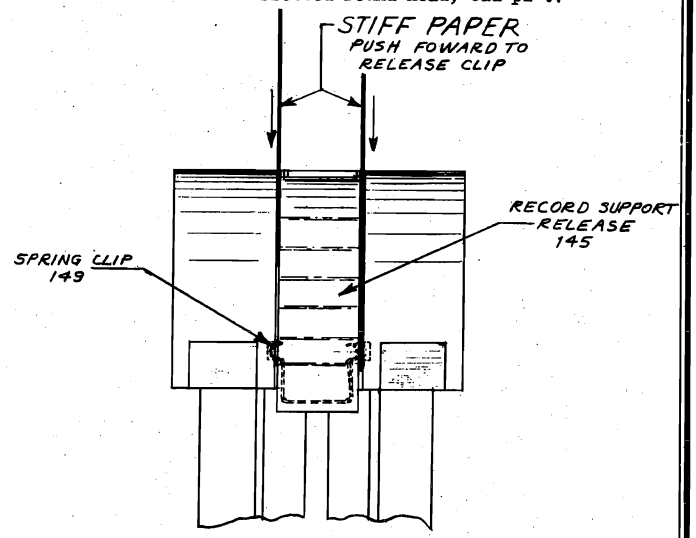

FIGURE 12. METHOD OF RELEASING CLIP ON RECORD SUPPORT RELEASE

SERVICE HINTS

STANDARD OR 33 RPM RECORDS FAIL TO DROP

1. Adjust the push-off lever (71), or -
2. Record center-hole binding on spindle. Ream out with pencil.

45 RPM RECORDS FAIL TO DROP

1. Drive gear (117) does not mesh with cycle gear (9) correctly.

PICK-UP ARM DOES NOT SET DOWN IN CORRECT POSITION

1. Adjust the set-down setscrew (53).

MECHANISM TRIPS BEFORE RECORD IS COMPLETED, OR DOES NOT TRIP AFTER RECORD IS COMPLETED

1. Adjust set-down setscrew (53) and the trip arm stud (36B).

CONTINUOUS CYCLING

1. Drive clutch lever (118) 180° out of phase; merely reverse the drive clutch lever's position on the drive gear (117), or -
2. Grease or dirt on trip flag bracket (21B), or -
3. Set-down flag (24C) not being actuated by restoring lever (21G), or -
4. Turntable bearing (116) or bearing washers (115) missing.

MECHANISM FAILS TO TRIP WHEN REJECT BUTTON IS TURNED

1. Reject rod (134) not connected, or -
2. Trip lever spring (22) weak or not connected.

MECHANISM SLOW IN STARTING

1. Bad motor, or -
2. Grease on idler wheel (109) or on speed control pulleys (95, 96 or 97), or -
3. Parts binding.

TURNTABLE DOES NOT REVOLVE

1. Check the power to the motor, or -
2. Remove the turntable and check to see if the motor shaft revolves, or -
3. Bad motor, or -
4. Grease on the idler wheel (109) or on speed control pulleys (95, 96 or 97), or -
5. Turntable not seated properly.

NEEDLE JUMPS GROOVES

1. Record changer not level, or -
2. Records dirty - clean with soap and water, or -
3. Needle not set correctly in the cartridge - it should be perpendicular to surface of the record.

RECORD SUPPORT CANNOT BE ADJUSTED TO THE THREE RECORD PLAYING POSITIONS

1. Set-down cam (28A) not set properly with relation to the set-down cam stud (24B). See Pick-up Arm Mounting Plate Assembly Replacement.

© John F. Rider

Compliments of www.nucow.com

MODELS RC-36,
RC-36A

DESCRIPTION

The Model RC-36A record changer differs from the Model RC-36 only in the type of record reject mechanism used. The RC-36 employs a limit trip, whereas the RC-36A uses a velocity trip, the operation of which depends upon the speed at which the tone arm approaches the center of the record, not upon any predetermined dimension from the center spindle.

The operating procedure for the RC-36A changer is as described in the RC-36 manual.

THEORY OF OPERATION

The change cycle of the RC-36A changer is similar to the RC-36, except where the new trip flag assembly (164) the set-down arm and trip assembly (167), and the set-down flag (165C) are involved. Refer to Figures 1 and 2 for the locations of the new parts.

The theory of operation of the velocity trip mechanism is as follows:

As the pick-up arm (40) approaches the center of a record, the trip arm (167A) tends to release the trip flag (164A) from the trip lever arm (163B); but, with every revolution of the turntable, the wiper (184) strikes the trip rod (164) and resets the trip flag (164A). This action continues until the pick-up arm enters the cut-off grooves, when the movement of the trip arm (167A) is so rapid that the trip flag (164A) cannot be reset by the wiper (184). The change cycle thus is initiated.

The trip arm spring (168) has been designed to allow the proper amount of slippage between the trip arm (167A) and the set-down arm (167B) so that the changer will not cycle during the normal playing of a record, and yet the friction is great enough to trigger the trip flag (164A) when the cut-off groove is reached.

As the pick-up arm moves outward, off the record, the rear projection on the trip arm (167A) encounters a stud (173) in the rear slide guide block (172), and the trip arm (167A) is reset to its proper position for the next cycle.

The set-down flag (165C) on the RC-36A has been revised to include a formed, flat spring (165D) which holds the set-down arm (167B) firmly until the pick-up arm has been lowered to the record, thus preventing "skating" if the changer is jarred or is setting at a slight angle.

ADJUSTMENTS AND SERVICE HINTS

All adjustments and service hints for the RC-36 changer apply equally to the RC-36A changer except the trip arm adjustment.

If the mechanism does not trip after playing a record, or trips before a record has completed its play, proceed as follows:

1. Remove the turntable (182).
2. Measure the distance between the outer edge of the hub on the turntable and the point of contact of the trip rod on the wiper (184). The dimension should be approximately 7/8". Bend the wiper bracket (183) if necessary.
3. Check the operation by playing a 78 RPM record and a 33 RPM record. If the changer trips too soon at 78 RPM, bend the wiper bracket (183) downward slightly (toward the trip rod). If the changer does not reject at 33 RPM, bend the wiper bracket (183) upward slightly (away from the trip rod).
4. If the above adjustment does not correct the trouble, remove the changer from the cabinet and proceed as in steps 5 & 6.
5. Check the reject operation visually. Move the trip flag (164A) outward until it is flush with the projection on the trip lever arm (163B). As the turntable is rotated, the wiper (184) should contact the trip rod (164) very lightly. Bend the wiper bracket (183) if necessary.
6. If the adjustment in step 5 is correct, and the changer still does not reject properly, check for any looseness or binding of the trip arm (167A) on the set-down arm assembly. The pressure required to move the trip arm (167A), measured from the tip of the trip arm, should be 10 to 18 grams. Replace the trip arm spring (168) if necessary.

REPLACEMENT PARTS LIST

LATE MODEL RC-36 REPLACEMENT PARTS SUPPLEMENT

The following parts are replacements for, or additions to, the original items listed in the RC-36 Service Manual. They are also used in the RC-36A.

Ref. No.	Part Number	Description
5	5A691472	Rivet, shoulder (replaces 5K691478 rivet) .....
35	3S3863	Setscrew: 4-40 x 1/4 Bristo head; cad pl (replaces 3S9700 setscrew)
85	37K692036	Grommet, rubber (replaces 37K15125 grommet) .....
123	3S400110	Screw, machine: 10-32 x 1-3/4" Phillips flat head; antique copper finish (replaces 3S488108 screw) .....
140	3S400038	Screw, thread cutting: #4 x 5/16; type 25; plain hex head; cad pl (replaces 3S490531 screw).
162	42A600415	Clip (replaces item 15, when used with 46A691309-A timing stop (14) .....
170	4S7683	Lockwasher, internal: #4; cad pl (under screw, item 39).
171	4S7683	Lockwasher, internal: #4 cad pl (under screw, item 50).
174	35A600113	Bumper, rubber (inserted in front edge of record hold-down clamp, item 65) .....
180	2S7981	Speednut: for 1/8" stud (fits over ends of screws, item 106) .....
181	29R5301	Lug, soldering (on motor grounding lead) .....
186	42K692053	Clip, speed (turntable retainer)

©John F. Rider

Compliments of www.nucow.com

MODELS RC-36, RC-36A

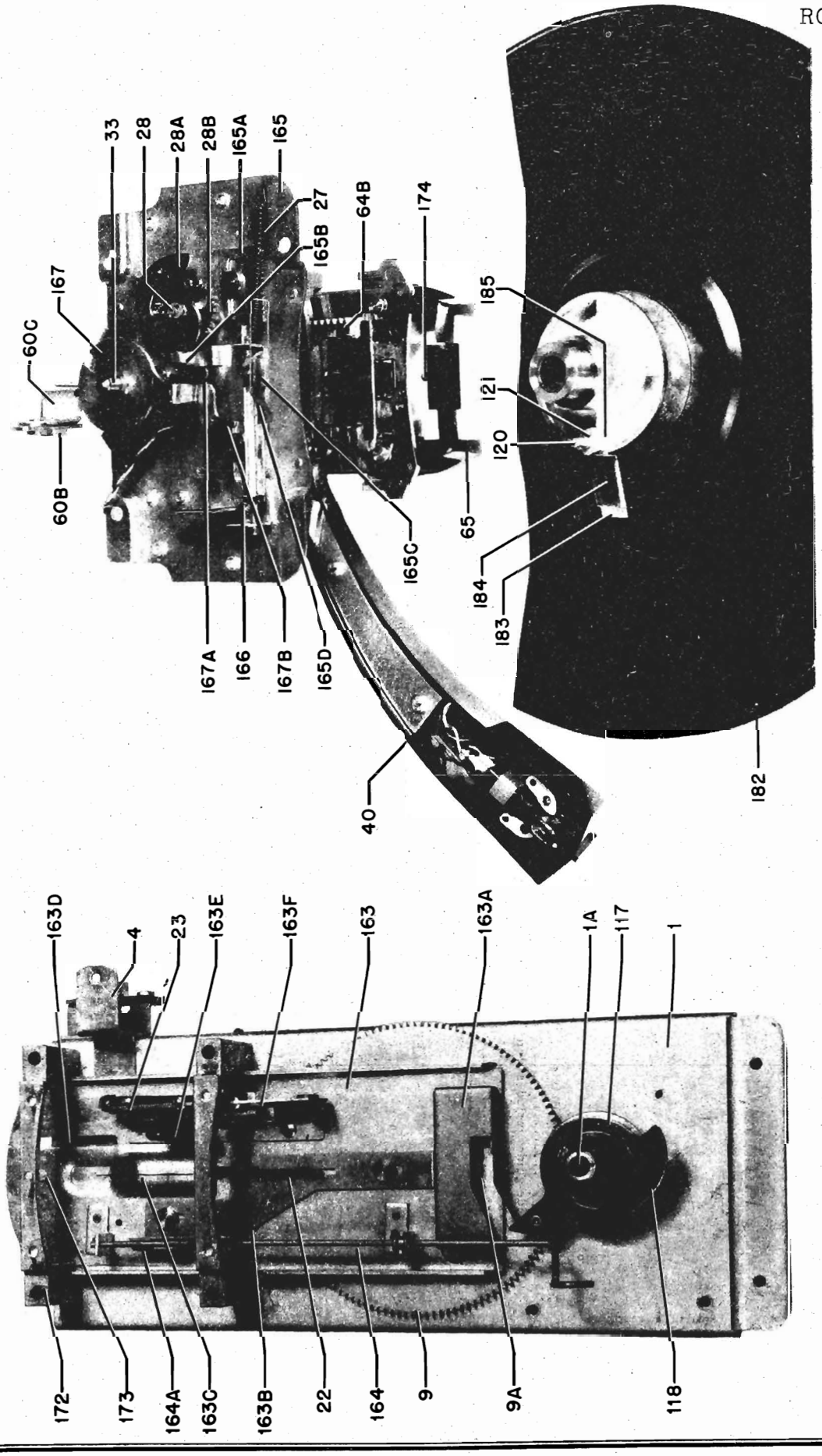

FIGURE 1. DISASSEMBLED VIEW OF RC-36A RECORD CHANGER MECHANISM

(BALANCE OF PARTS SAME AS RC-36)

©John F. Rider

Compliments of www.nucow.com

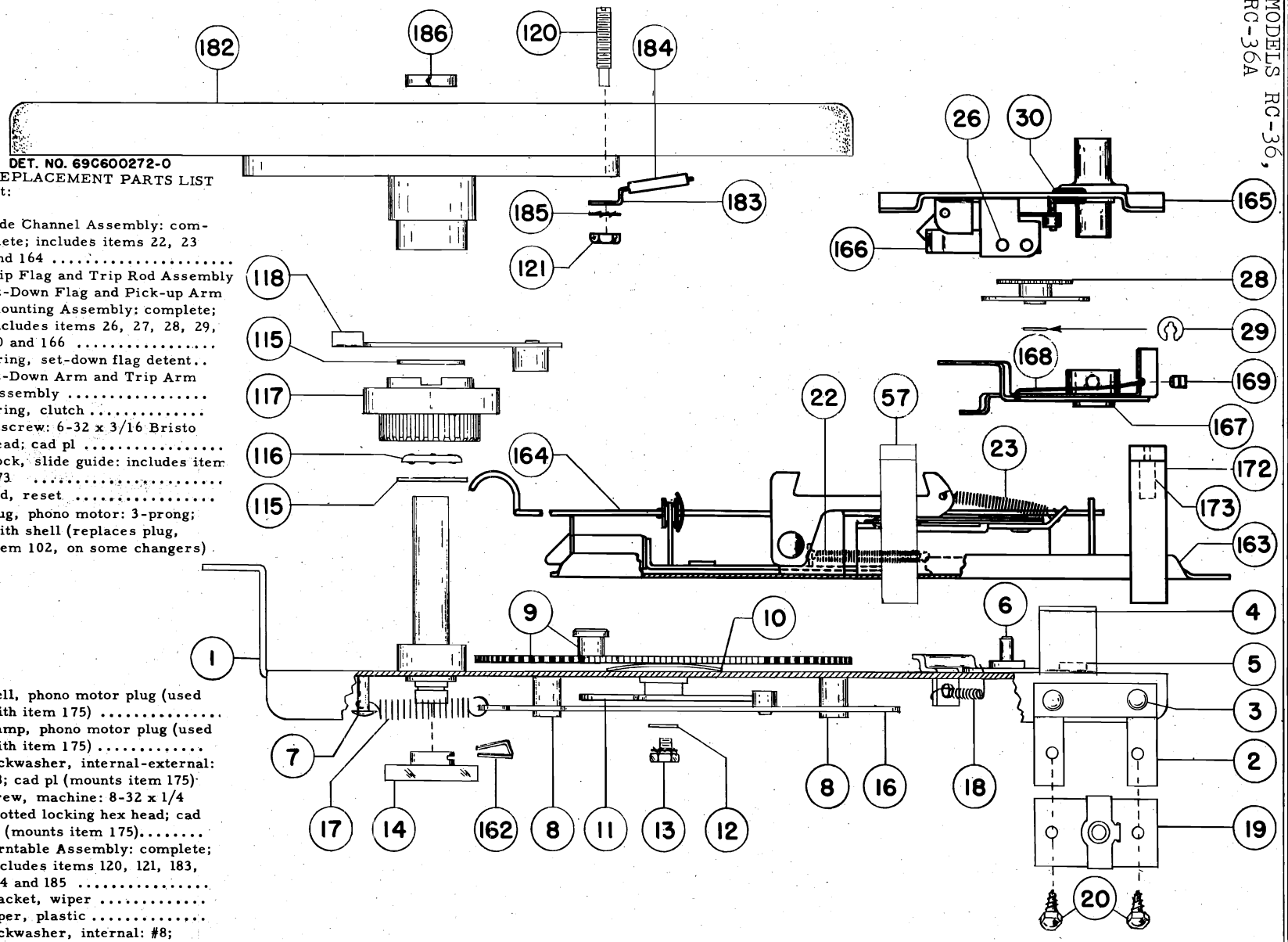

MODEL RC-36A REPLACEMENT PARTS LIST
Same as RC-36 except:

163	1X600757	Slide Channel Assembly: complete; includes items 22, 23 and 164 .....
164	1B600748	Trip Flag and Trip Rod Assembly
165	1X600761	Set-Down Flag and Pick-up Arm Mounting Assembly: complete; includes items 26, 27, 28, 29, 30 and 166 .....
166	41A600766	Spring, set-down flag detent..
167	1B600752	Set-Down Arm and Trip Arm Assembly .....
168	41A600856	Spring, clutch .....
169	3S3866	Setscrew: 6-32 x 3/16 Bristo head; cad pl .....
172	1X600895	Block, slide guide: includes item 173 .....
173	46A600738	Stud, reset .....
175	28A16313	Plug, phono motor: 3-prong; with shell (replaces plug, item 102, on some changers)
176	15A690616	Shell, phono motor plug (used with item 175) .....
177	42A600114	Clamp, phono motor plug (used with item 175) .....
178	4A9751	Lockwasher, internal-external: #8; cad pl (mounts item 175)
179	3S7205	Screw, machine: 8-32 x 1/4 slotted locking hex head; cad pl (mounts item 175).....
182	1X600773	Turntable Assembly: complete; includes items 120, 121, 183, 184 and 185 .....
183	7A600745	Bracket, wiper .....
184	37K600771	Wiper, plastic .....
185	4S7651	Lockwasher, internal: #8; cad pl.....
187	3S400218	Screw, machine: 6-32 x 1/4 Phillips binder head lockscrew; nkl pl .....

FIGURE 2. RC-36A RECORD CHANGER REPLACEABLE PARTS

(BALANCE OF PARTS SAME AS RC-36)

©John F. Rider

Compliments of www.nucow.com

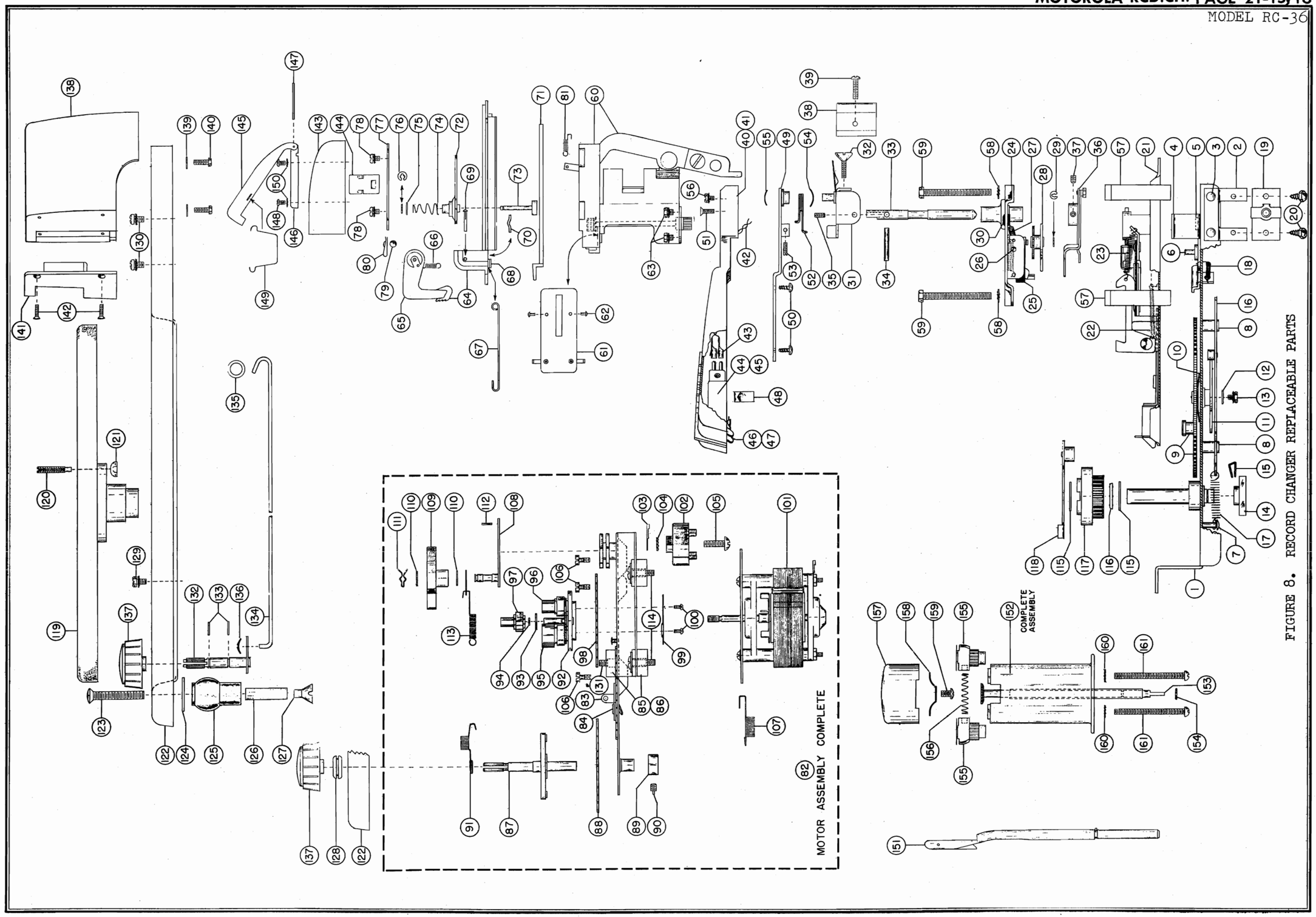

FIGURE 8. RECORD CHANGER REPLACEABLE PARTS

© John F. Rider

Compliments of www.nucow.com

MODEL RC-37

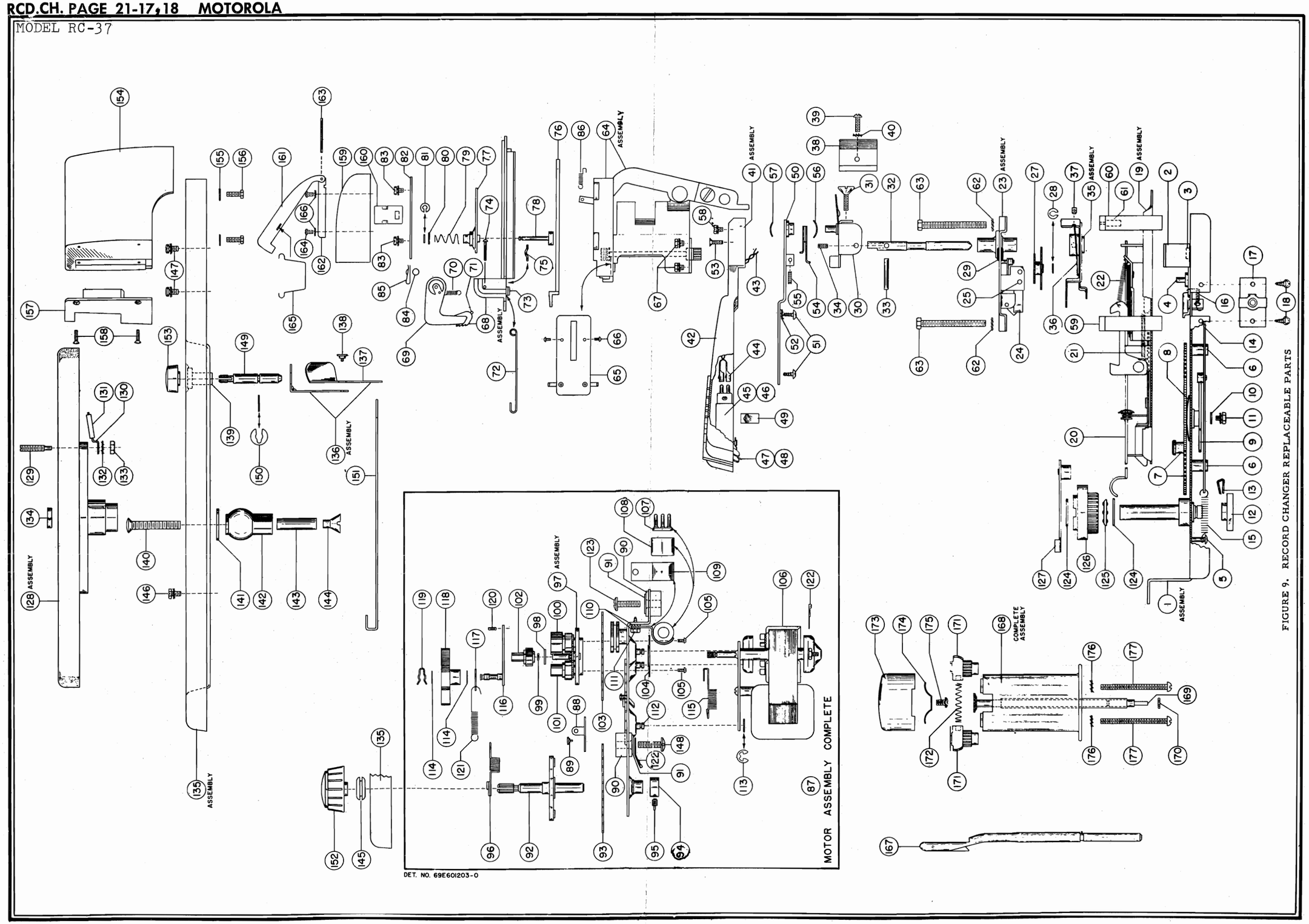

FIGURE 9. RECORD CHANGER REPLACEABLE PARTS

©John F. Rider

Compliments of www.nucow.com

DESCRIPTION

Motorola Model RC-37 Record Changer is a three-speed, single-post changer, designed to play the following records, not intermixed:

a. ten 12-inch 33 or 78 RPM records, or -

b. twelve 10-inch 33 or 78 RPM records, or -

c. twelve 7-inch 45 RPM records, or -

d. twelve 7-inch 33 RPM records

Both standard and fine-groove records may be played with a specially designed single-point needle. Two interchangeable record spindles are used - a large diameter spindle for 45 RPM records and a small diameter spindle for all other type records.

The last record to drop to the turntable will be repeated until the changer is turned off. The speed control on the changer will stop the turntable; but, since no power switch is incorporated in the changer, the phono motor will continue to run until the "power" or "phono" control on the radio panel is turned off.

The RC-37 changer employs a velocity trip, the operation of which depends upon the speed at which the tone arm approaches the center of the record, not upon any predetermined dimension from the center spindle.

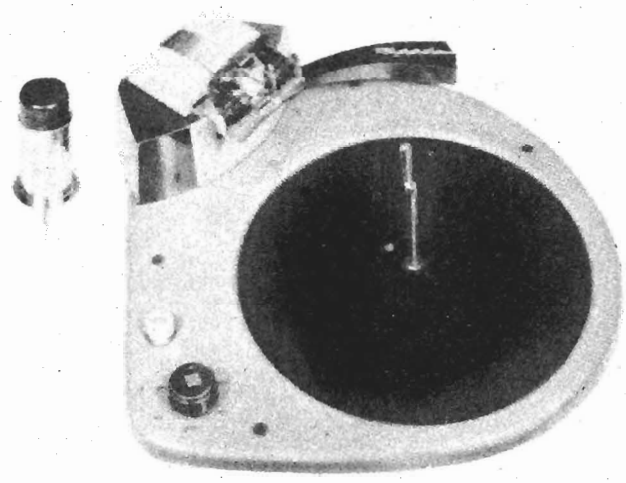

The motor is designed to operate on 105 to 120 volts, 60 cycles AC only.

OPERATION

PHONOGRAPH CONTROLS

SPEED. The SPEED control determines the speed at which the turntable revolves. Set this control to the position corresponding to the playing speed of the records, viz., record speed 33 RPM, SPEED control to 33; record speed 45 RPM (large center-hole records), SPEED control to 45; or record speed 78 RPM, SPEED control to 78.

CAUTION: The SPEED control can be rotated clockwise only from a playing speed position, but it may be rotated in either direction, one position, from OFF.

REJECT. The REJECT knob is pushed momentarily and then is released to start playing action or to reject a record before it has completely played.

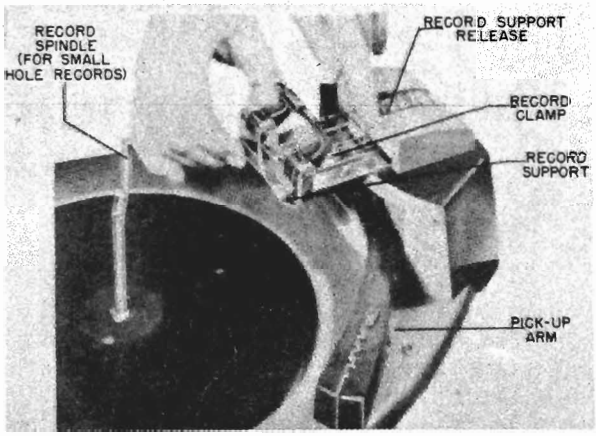

To adjust the RECORD SUPPORT, press down on the RECORD SUPPORT RELEASE and move the record support to the desired position.

FIGURE 1. RECORD SUPPORT ADJUSTMENT

OPERATING PROCEDURE

1. Turn the radio power switch "on" and the phono-radio control to the "phono" position.

2. Select the appropriate center post for the records to be played.

   a. Two spindles are provided: one for small-hole records and one for large-hole records.

   b. To play small center-hole records, insert the small diameter spindle into the hole in the center of the turntable, and rotate the spindle until the pin drops into the slot in the turntable bushing.

   c. To play large center-hole records, insert the large diameter spindle into the turntable hole and rotate it counterclockwise until it reaches a stop. If the two metal separator discs of the spindle are protruding, remove the spindle, turn the spindle shaft until they disappear, and re-insert it into the turntable.

   d. To remove a spindle from the turntable, lift it straight up.

3. Adjust the RECORD SUPPORT to the correct position, according to the size record to be played.

   a. Three positions of the record support are provided: for 7-inch, 10-inch or 12-inch records (see Figure 2).

   b. To adjust the RECORD SUPPORT, press down on the RECORD SUPPORT RELEASE and move the RECORD SUPPORT to the correct position, according to the size records being played. The RECORD SUPPORT will lock in position (see Figure 1). NOTE: When playing 7-inch 45 RPM records, the RECORD SUPPORT must be in the 7-inch playing position, although the ledge is not used.

©John F. Rider

Compliments of www.nucow.com

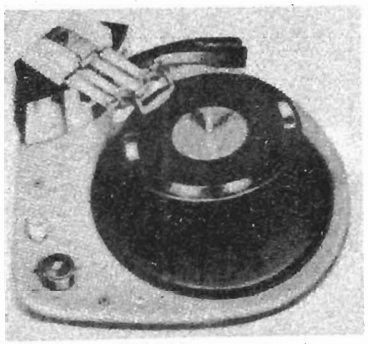

A. To play 7-inch small-hole records, press down on the RECORD SUPPORT RELEASE and move the RECORD SUPPORT to the extreme outward position. Rest the records on the ledge of the RECORD SUPPORT and on the off-set of the small spindle.

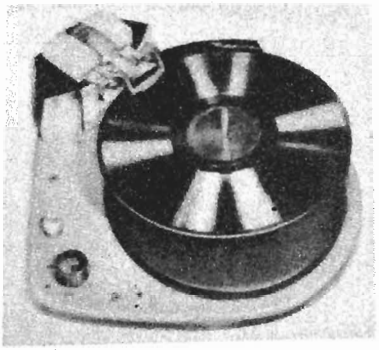

B. To play 10-inch records, press down on the RECORD SUPPORT RELEASE and move the RECORD SUPPORT to the middle position (1½ inches in from the extreme outward position). Rest the records on the ledge of the RECORD SUPPORT and on the off-set of the small spindle.

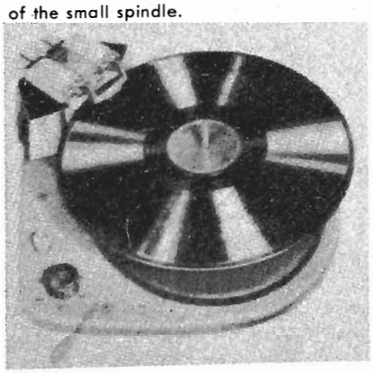

C. To play 12-inch records, press down on the RECORD SUPPORT RELEASE and move the RECORD SUPPORT to the extreme inward position. Rest the records on the ledge of the RECORD SUPPORT and on the off-set of the small spindle.

D. To play 7-inch large-hole records, press down on the RECORD SUPPORT RELEASE and move the RECORD SUPPORT to the extreme outward position. Rest the records on the off-set of the large spindle. Do not lower the RECORD CLAMP.

FIGURE 2. RECORD SUPPORT IN RECORD PLAYING POSITION

4. Load the records.

   a. Raise the RECORD CLAMP to a vertical position.

   b. Place a stack of records on the center post in the desired sequence, with the last record to be played on top.

   c. When playing small-hole records, rest them on the ledge of the RECORD SUPPORT and on the off-set of the spindle. Rest large-hole records on the supports on the large spindle.

   d. Gently lower the RECORD CLAMP on the records. NOTE: DO NOT LOWER THE RECORD CLAMP WHEN PLAYING 7-INCH 45 RPM RECORDS.

5. Adjust the SPEED control to the position corresponding to the playing speed of the records to be played.

6. Momentarily push the REJECT knob.

   a. The bottom record will drop to the turntable, the pick-up arm will lift, swing in, and lower to the record. Playing will now begin.

   b. The REJECT knob may be pushed to reject a record before it has completely played. NOTE: Never touch the pick-up arm while the phonograph is in a changing cycle.

7. At the conclusion of playing, and as the last record is being repeated, lift the pick-up arm and move it to the right.

8. Turn the SPEED control clockwise to the OFF position. NOTE: The turntable will stop but the motor will continue to run until turned off, either with the "phono" control or the "power" switch on the radio panel.

9. Turn the power switch on the radio panel "off".

TO UNLOAD RECORDS

1. Raise the RECORD CLAMP.

2. Lift the records straight up from the turntable. Do not apply pressure to the top records. Keep the thumbs free. NOTE: If, when removing 45 RPM records from the large spindle, the two metal separator discs are protruding from the spindle, lift both the spindle and the records from the turntable. Rotate the shaft on the bottom of the spindle to retract the discs, and then remove the records.

©John F. Rider

Compliments of www.nucow.com

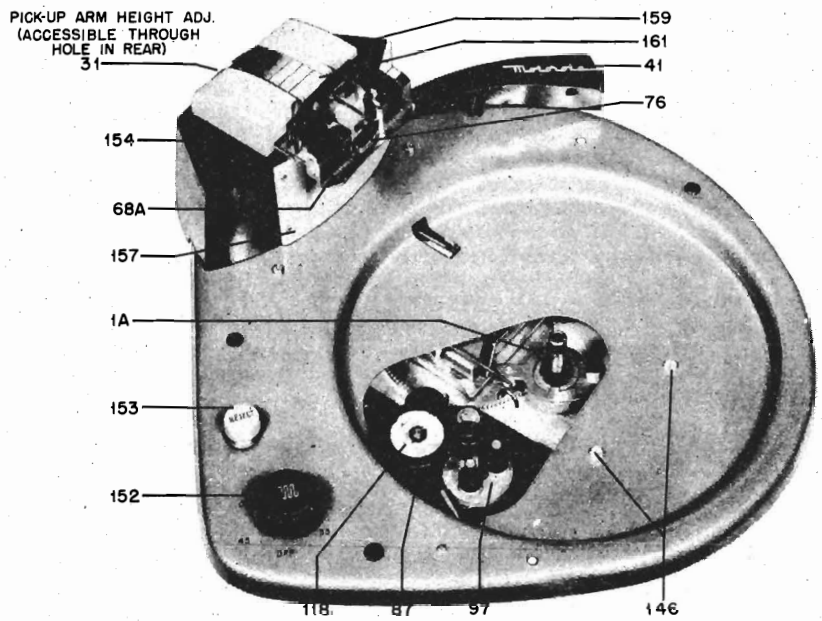

FIGURE 3. TOP VIEW OF RECORD CHANGER WITH TURNTABLE REMOVED

THEORY OF OPERATION

Refer to Figures 3, 4, 5, 6, 7 and 9 for the location of the various parts described in this section.

The turntable is rim-driven through an idler wheel (118) and a speed control turret (97). The speed control turret is operated by means of a 3-gear train, linking the turret to the speed change shaft assembly (92), which is manually operated by the speed control knob on the record changer base. This control has six positions - 78, 45 & 33 RPM and three "off" positions - controlled by a six-point cam (92A). This cam permits easy selection of turntable speeds, yet it prevents the speed control turret (97) from jamming the idler wheel (118) against the turntable and causing flat spots. The speed control can be rotated clockwise only from a playing speed position, but it may be rotated in either direction, one position, from OFF.

During the playing of a record, only the motor assembly (87) and the turntable (128) are in operation. The balance of the mechanism is inoperative until the change cycle starts.

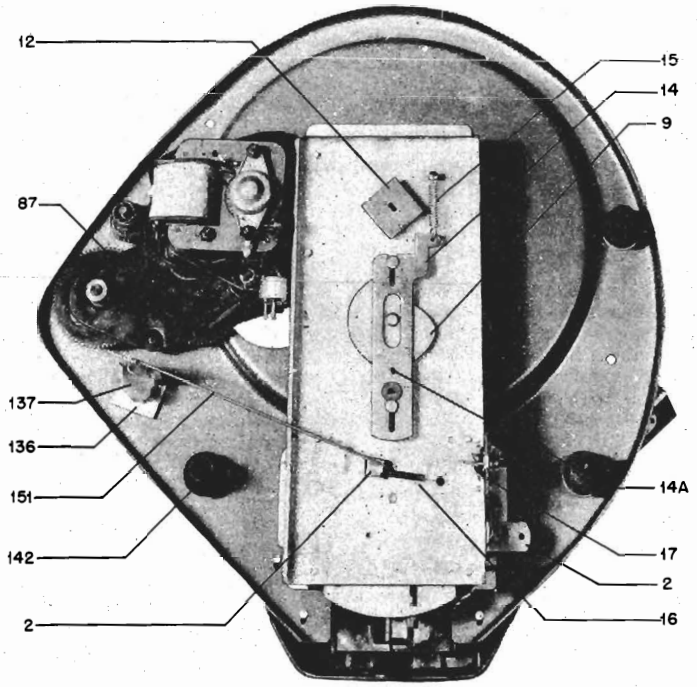

FIGURE 4. BOTTOM VIEW OF RECORD CHANGER

©John F. Rider

Compliments of www.nucow.com

MODEL RC-37

THE CHANGE CYCLE

The change cycle may be initiated in two ways - by means of the pick-up arm entering the cut-off grooves in the record or by manual operation of the reject knob. Power for the change cycle is obtained from the turntable. As the pick-up arm (41) approaches the center of a record during playing, the trip arm (35A) tends to release the trip flag (20A) from the trip lever arm (19B); but, with every revolution of the turntable, the wiper (131) strikes the trip rod (20) and resets the trip flag (20A). This action continues until the pick-up arm enters the cut-off grooves, when the movement of the trip arm (35A) is so rapid that the trip flag (20A) cannot be reset by the wiper (131). The change cycle thus is initiated. The trip arm spring (36) has been designed to allow the proper amount of slippage between the trip arm (35A) and the set-down arm (35B) so that the changer will not cycle during the normal playing of a record and yet the friction is great enough to trigger the trip flag (20A) when the cut-off groove is reached.

If the reject knob is pushed manually, the reject arm (2) acting through the reject rod (151), releases the trip flag (20A) from the trip lever arm (19B), thereby starting the change cycle.

Prior to a change cycle, and while the turntable revolves the weighted end of the drive clutch lever (127) is resting on the trip lever (19A). The releasing of the trip flag (20A) from the trip lever arm (19B) allows the trip lever spring (21) to

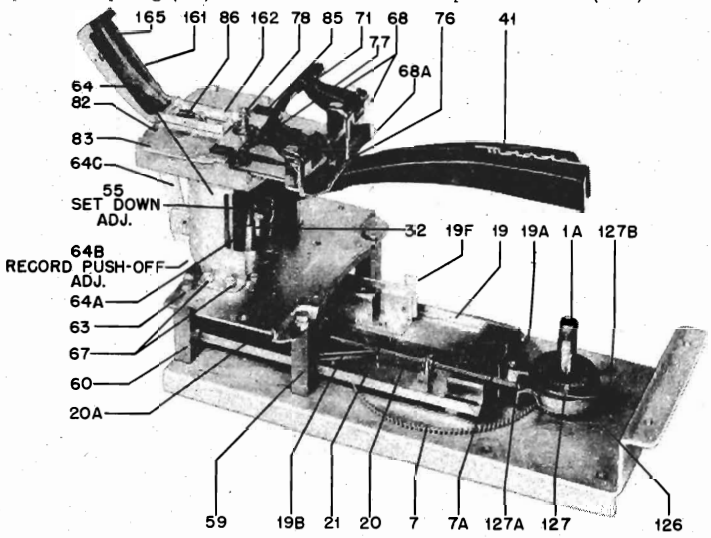

FIGURE 5. VIEW OF RECORD CHANGER WITH BASE & MOTOR ASSEMBLY REMOVED

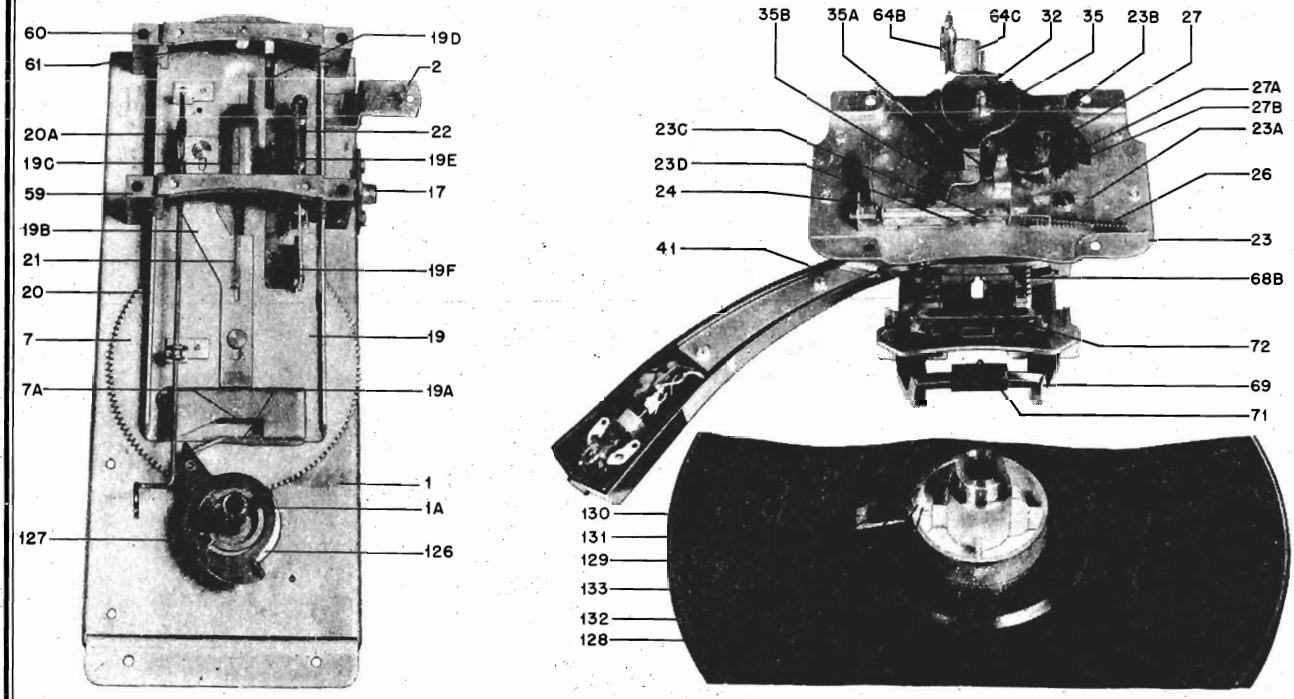

FIGURE 6. DISASSEMBLED VIEW OF RECORD CHANGER MECHANISM

©John F. Rider

Compliments of www.nucow.com

pull the trip lever (19A) away from the drive clutch lever (127), causing the weighted end (127A) of the drive clutch lever (127) to lower. Consequently, the drive dog (127B) of the drive clutch lever contacts the drive screw (129) on the turntable.

Since the turntable continues to revolve when the drive clutch lever (127) engages the drive screw (129), the drive gear (126) causes the cycle gear (7) to turn. As the cycle gear revolves, its roller (7A) moves the slide channel (19) back and, in so doing, the pick-up arm shaft (32) rides up on the incline (19C) of the slide channel, raising the pick-up arm. As the slide channel (19) continues its backward motion, the clutch fingers (19E) will engage the set-down arm assembly (35) to swing the pick-up arm in a direction away from the spindle. At the extreme backward travel of the slide channel (19) the push-off lever (64C), which rides in the slot (19D) of the slide channel, is actuated. This lever, in turn, through the push-off link (77), moves the record push-off lever (76), ejecting the lower record from the record support (68A) and permitting it to drop to the turntable.

While the slide channel (19) is in its extreme backward position, the rear projection on the trip arm (35A) encounters a stud (61) in the rear slide guide block (60), and the trip arm (35A) is reset to its proper position for the next cycle; the restoring lever (19F) lowers the set-down flag (23C) (which will index the pick-up arm when the slide channel makes its forward motion); and the trip slide cocking stud (4) engages the trip arm (19B) with the trip flag (20A) to set it for the next cycle. At this point one-half of the change cycle is completed.

While the cycle gear (7) is in its second half-revolution, the slide channel (19) will move forward, and the clutch fingers (19E) that are still engaging the set-down arm assembly (35) will swing the pick-up arm back toward the record spindle until the set-down arm (35B) contacts the set-down flag (23C), which controls the pick-up arm set-down point. The set-down flag (23C) includes a formed, flat spring (23D) which holds the set-down arm (35B) firmly until the pick-up arm has been lowered to the record, thus preventing "skating" if the changer is jarred or is setting at a slight angle.

While the arm is being held over the set-down point by the set-down flag (23C), continued rotation of the cycle gear (7) makes the pick-up arm shaft (32) ride down the incline (19C), lowering the pick-up arm onto the record.

As the slide channel (19) approaches the end of the cycle (fully forward position) the set-down flag (23C) is moved out of the way by the restoring lever (19F) to give the pick-up arm complete freedom of movement during playing of the records. Also, the drive clutch lever (127) rides up the trip lever incline (19A) and disengages the drive clutch lever dog (127B) from the drive dog screw (129) in the turntable. The cycle thus is ended.

PICK-UP ARM SET-DOWN POINT

The point at which the pick-up arm drops to the turntable for either 7-inch, 10-inch or 12-inch records is determined by the position of the set-down flag (23C).

The movement of the record support assembly (68), when it is adjusted for a specific size record, causes rotation of the gear and pinion shaft assembly (64A), through the rack gear (68B) on the record support. Since the gear and pinion shaft assembly (64A) engages the set-down gear (27B), and the set-down cam (27A) is attached to the set-down gear, any movement of the record support will cause the set-down cam to turn. The set-down cam stud (23B) on the slide plate and spring assembly (23A), rides with the set-down cam, due to the tension of the slide plate spring (26). Therefore, any action of the set-down cam will affect the position of the set-down flag (23C).

45 RPM RECORD DROP

The 45 RPM spindle shaft, when placed into the turntable center hole, fits into the slot in the timing stop (12).

When the change cycle begins, and as the slide channel (19) is making its backward movement, the reject plate (14) moves forward, due to the eccentric form of the drop cam (9) riding on the roller (14A); and the tension of the spring (15) pulls the reject plate (14) forward until it contacts the timing stop (12), preventing it from rotating. Since the turntable and spindle continue to rotate, while the timing stop (12) and spindle shaft (169) remain stationary, the two pinion gears (171) in the upper section of the spindle rotate around the gear on the spindle shaft. The eccentric extending from the upper end of the two pinion gears (171) runs in a slot in the molded record supports to produce an action which causes the supports to move in against the tension of the spring (172). As the plastic record supports recede, the separator discs mounted above each record support separate the lower record from the stack and support the remainder of the stack, while the lower record drops to the turntable. With continued rotation of the spindle, the record supports, due to the action of the spring (172), will move out to support the record stack, while the separator discs recede into the spindle.

When the slide channel (19) is making its forward movement, the reject plate (14) moves back, releasing the timing stop (12) and allowing the timing stop and the spindle shaft to revolve for the playing of the record.

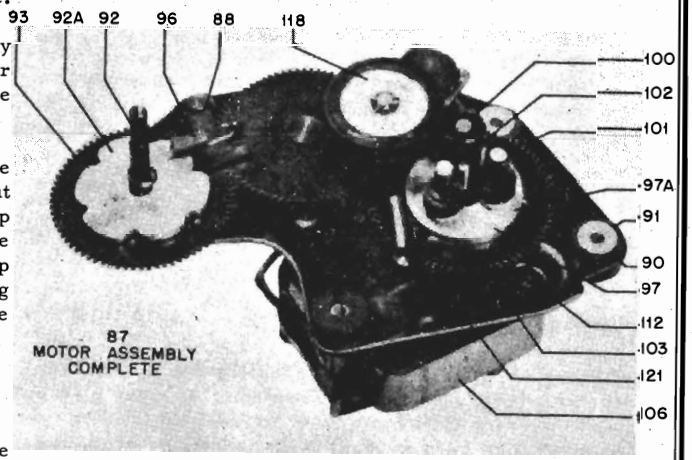

FIGURE 7. MOTOR & SPEED CHANGING ASSEMBLY

©John F. Rider

Compliments of www.nucow.com

MAINTENANCE

It is recommended that the service man thoroughly study and familiarize himself with the operation of the integral parts of the record changer and analyze the trouble carefully before attempting to make any adjustments or to do any repair work on the record changer.

Should it become necessary to remove the changer from the cabinet, or the changer mechanism from the base plate, the service man is advised not to remove parts or sections of the changer unnecessarily, since the changer then may require readjustment.

The changer will not operate properly, either in the cabinet or on the repair bench, unless it is level. If the changer is working satisfactorily, leave it alone.

ADJUSTMENT

NEEDLE SET-DOWN ADJUSTMENT

A template (Motorola Part No. 54B792330), furnished with the record changer, is required to index the needle to the correct set-down point after a needle or cartridge has been replaced. If a template is not available, one may be improvised as follows:

1. Draw a circle of 3-5/16 inches radius on a piece of cardboard.
2. Punch out a 17/64 inch diameter hole at the exact center of the circle.

To index the needle to the correct set-down point:

1. Place the small diameter spindle in the turntable and the template over the spindle.
2. Move the record support to the 7-inch record playing position.
3. Rotate the turntable by hand and push the reject knob to start the change cycle. Watch the needle carefully. It must land on the curved line of the template.
4. If the needle does not land on the line, adjust the set-down setscrew (55) located on the pick-up arm (see Figure 12). Turn the setscrew clockwise to move the pick-up arm towards the spindle, or turn it counterclockwise to move the pick-up arm away from the spindle. IMPORTANT: Turn the screw very slightly, and repeat steps 3 & 4 until the needle lands exactly on the curved line.
5. When the needle is set correctly for the 7-inch position, the index will be set automatically for 10-inch and 12-inch records.

PICK-UP ARM HEIGHT ADJUSTMENT

If the pick-up arm strikes the bottom record of a stack of records resting on the 45 RPM spindle, or if the pick-up arm does not rise sufficiently to clear a 1-inch stack of records after they have dropped to the turntable, proceed as follows:

1. Remove the cabinet back or remove the record changer from the cabinet, as required, to gain access to the rear of the record changer.
2. The height adjustment screw (31) is accessible thru a hole in the rear of the record support housing (154) (see Figure 3).
3. Turn the height adjustment screw (31) clockwise to raise the arm, or counterclockwise to lower the arm, as required.

PUSH-OFF LEVER ADJUSTMENT

If a record fails to drop to the turntable, check the position of the record push-off lever (76) on the record support during a change cycle. It should protrude a minimum of 1/32 inch from the record support during the record dropping portion of the change cycle. If adjustment is required, proceed as follows:

1. Remove the cabinet back or remove the record changer from the cabinet, as required, to gain access to the rear of the record changer.
2. Push the reject knob to place the changer in cycle and rotate the turntable by hand until the record push-off lever (76) is at its point of maximum forward travel.
3. Turn the push-off adjustment screw (64B) until the push-off lever (76) protrudes at least 1/32 inch beyond the lip (68A) of the record support.

TURNTABLE DRIVE PIN ADJUSTMENT

If a "clicking" noise is heard while a record is playing, the drive dog adjusting screw (129) on the bottom of the turntable is touching the drive dog (127B). To remedy:

1. Remove the turntable. NOTE: Do not remove the drive clutch lever (127); also, do not lose the bearing washer (124).
2. Loosen the hex nut (133) and turn the drive dog adjusting screw (129) counterclockwise to bring the screw farther from the drive dog. CAUTION: Do not turn the screw too much, since the screw will not engage the drive dog and, as a consequence, the changer will fail to cycle.
3. Tighten the hex nut (133).
4. Replace the turntable.

©John F. Rider

Compliments of www.nucow.com

TRIP ADJUSTMENT

If the mechanism does not trip after playing a record, or trips before a record has completed its play, proceed as follows:

1. Remove the turntable (128).

2. Measure the distance between the outer edges of the hub on the turntable and the point of contact of the trip rod on the wiper (131). The dimension should be approximately 7/8 inch. Bend the wiper bracket (130), if necessary.

3. Check the operation by playing a 78 RPM record and a 33 RPM record. If the changer trips too soon at 78 RPM, bend the wiper bracket (130) downward slightly (toward the trip rod). If the changer does not reject at 33 RPM, bend the wiper bracket (130) upward slightly (away from the trip rod).

4. If the above adjustment does not correct the trouble, remove the changer from the cabinet and proceed as in steps 5 & 6.

5. Check the reject operation visually. Move the trip flag (20A) outward until it is flush with the projection on the trip lever arm (19B). As the turntable is rotated, the wiper (131) should contact the trip rod (20A) very lightly. Bend the wiper bracket (130), if necessary.

6. If the adjustment in step 5 is correct, and the changer still does not reject properly, check for any looseness or binding of the trip arm (35A) on the set-down arm assembly. The pressure required to move the trip arm (35A), measured from the tip of the trip arm, should be 10 to 18 grams. Replace the trip arm spring (36), if necessary.

PARTS REMOVAL & REPLACEMENT

TO REMOVE RECORD CHANGER FROM CABINET

1. Disconnect the power and phono input leads from the record changer.

2. Remove the changer from the cabinet, as shown in Figure 8.

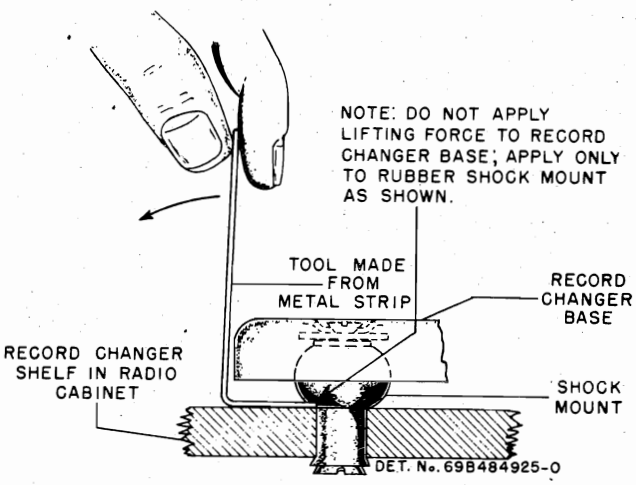

FIGURE 8. REMOVAL OF CHANGER FROM CABINET

NEEDLE REPLACEMENT

Replace the needle with a Motorola needle of the proper type only; otherwise, damage to the records or crystal cartridge will result. Two types of cartridges and needles, as described below, are used in the Model RC-37 changer. The needles are not interchangeable between the two cartridges.

1. Motorola needle, Part No. 59K691908, is used in the Shure cartridge. It is held in the cartridge with a small, round, knurled nut (see Figure 10). To replace the needle, loosen the nut and remove the needle.
2. Motorola needle, Part No. 59K691909, is used in the Electro-Voice cartridge. It is not held with a nut, but is pushed into the cartridge (see Figure 11). To remove the needle, pull it from the cartridge with fingers or pliers.

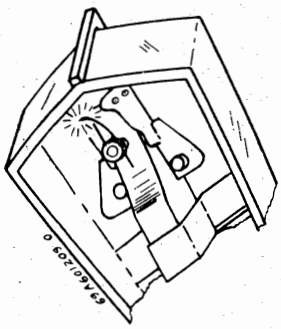

FIGURE 10.
SHURE NEEDLE REPLACEMENT

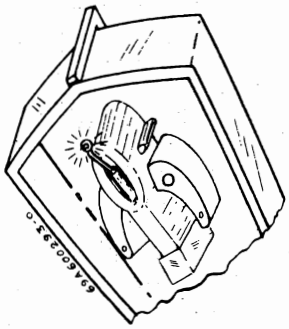

FIGURE 11. ELECTRO-VOICE NEEDLE REPLACEMENT

IMPORTANT: The needles should be held in the cartridges perpendicular to the surface of the record. After the needle has been replaced, check the set-down point as outlined in NEEDLE SET-DOWN ADJUSTMENT.

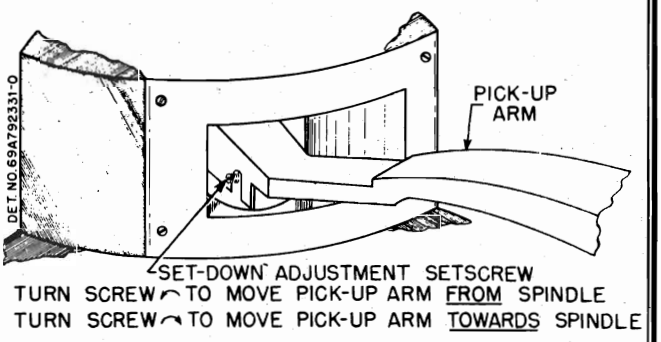

FIGURE 12. NEEDLE SET-DOWN ADJUSTMENT

CARTRIDGE REPLACEMENT

Two types of cartridges, Shure and Electro-Voice, are used. The two cartridges are interchangeable. To remove the cartridge, merely remove the retainer clip (49) and disconnect the pick-up leads. IMPORTANT: After the cartridge has been replaced, check the needle set-down point as outlined in NEEDLE SET-DOWN ADJUSTMENT.

©John F. Rider

Compliments of www.nucow.com

MODEL RC-37

TO REMOVE THE TURNTABLE

1. Remove the turntable retaining clip (134).
2. Lift the turntable straight up from the base plate. Be sure the bearing (125) and the bearing washers (124) do not get lost or dirty.
3. When replacing the turntable, it will be necessary to center the drive clutch lever (127) and the bearing washer (124) to allow proper seating of the turntable over the spindle post.

TO REPLACE THE DRIVE CLUTCH LEVER

1. Place the changer mechanism in the rest position [slide channel (19) in full forward position], with the trip flag bracket (20A) engaged in the trip lever arm (19B).
2. Place the drive clutch lever (127) in position with the weighted end (127A) resting at the bottom of the trip lever incline (19A).

TO REMOVE THE DRIVE GEAR

1. Remove the turntable and drive clutch lever (127).
2. Lift the drive gear (126) straight up from the spindle post.
3. When replacing the drive gear (126) it is important that the changer be timed correctly. To time the changer, rotate the cycle gear (7) until the cycle gear roller (7A) is directly in line with the spindle post (1A), and pull the slide channel (19) forward until it is locked by the trip flag (20A). Then place the drive clutch lever (127) in position on the drive gear (126), and mesh the gears so that the weighted end of the clutch lever (127A) rests on the lowest edge of the trip lever incline (19A). Check the timing by playing a stack of 45 RPM records. If a record of the stack fails to drop during a cycle, move the drive gear (126) one "tooth" and play another stack of records to again check the timing.

TO REMOVE THE RECORD SUPPORT HOUSING COVER AND RECORD SUPPORT HOUSING

1. Remove the four Phillips head screws (158) that secure the housing cover (157) to the housing (154).
2. Remove the four hex head screws (156) and four washers (155), accessible from the bottom of the changer, that secure the housing to the base plate.

TO REMOVE THE SLIDE RELEASE HINGE AND HINGE BRACKET

1. The record support slide release hinge (161) is held in place with a spring clip (165). To release the clip, place a piece of stiff paper on both sides of the release hinge, between the release hinge and the slide cover (159). See Figure 13. Pull the paper forward, simultaneously lifting upward on the release hinge.
2. Remove the four machine screws (164) holding the slide release hinge bracket (162).

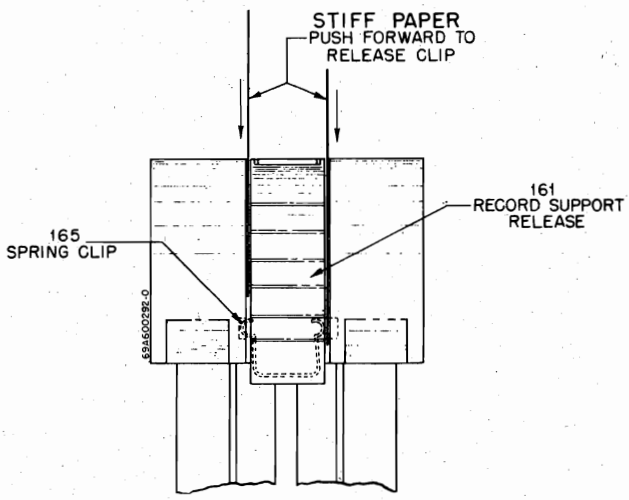

FIGURE 13. REMOVAL OF RECORD SUPPORT RELEASE

TO REMOVE THE COMPLETE CHANGER MECHANISM AND MOTOR ASSEMBLY

1. Remove the record support housing cover (157) and housing (154).
2. Remove the speed control knob (152).
3. Disconnect the reject rod (151).
4. Remove the turntable and drive clutch lever (127).
5. From the bottom of the changer, remove one machine screw (148) securing the motor assembly (87) to the base plate (135).
6. Remove the four Phillips head lockscrews (147).
7. Remove the two hex head screws (146).
8. Carefully lift the base plate from the motor and changer mechanism.

MOTOR SPEED CONTROL TURRET ASSEMBLY REPLACEMENT

CAUTION: Do not disassemble the speed changing mechanism without first marking the positions of turret assembly, the speed change gears, and the speed change cam, as shown in Figure 14. But, if the turret has been removed accidentally, or if the above precaution has not been taken, the assembly procedure is as follows (refer to Figures 9 & 14).

1. Assemble the speed control pulleys (100), (101), (102) to the turret plate (97A). They are snapped over the pulley shafts, and they can be pried off with a screwdriver. Note that the 45 RPM pulley is adjacent to the part number on the turret plate, as shown in Figure 14.
2. Attach the turret plate (97) and the speed change gear (103) to the speed control bracket with the turret spring washer (104) and the two machine screws (105).
3. Place the speed change shaft assembly (92) and the speed change gear (93) on the speed control bracket. Do not tighten the collar bushing (94) to the shaft.
4. Rotate the turret assembly until the correct angle is obtained between the center of the turret plate and the speed change shaft and 33 RPM speed control pulley, as in Figure 14. Use a combination square with a protractor, or other accurate protractor, for measuring the angle.
5. Lift the speed change gear (93) from the idler gear and rotate it until the slot in the shaft is in the direction shown in Figure 14 and the speed detent pawl (88) falls into the detent in the speed change cam (92A). There are two detents, on opposite sides of the cam, into which the pawl may fall. The correct detent is the one which will permit clockwise rotation only of the speed change shaft.
6. Tighten the setscrew (95) in the collar bushing (94).
7. Attach the motor (106) to the studs on the speed control bracket with the "C" washers (113).
8. Attach the tension springs (121), (96), (115). Note that the idler wheel spring (121) hooks into a soldering lug (117) under the idler wheel.
9. Check the complete assembly for the correct speeds and the sequence of speeds.

©John F. Rider

Compliments of www.nucow.com

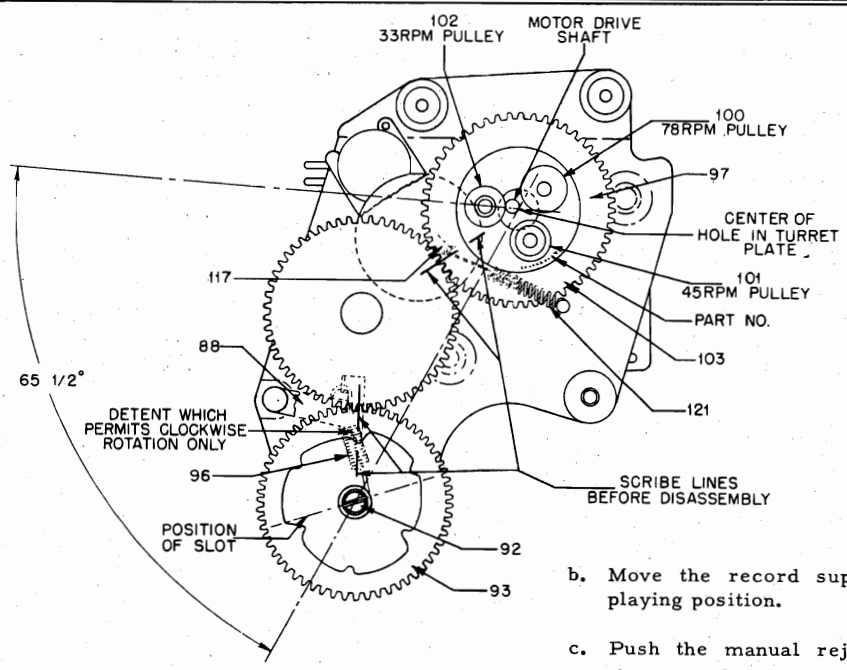

FIGURE 14. MOTOR GEAR TRAIN ASSEMBLY

PICK-UP ARM MOUNTING PLATE ASSEMBLY REPLACEMENT

If it is necessary to remove the pick-up arm mounting plate assembly (23), the following precautions should be observed when replacing the assembly.

1. Move the record support to the 12-inch playing position.

2. Align the hole in the set-down cam (27A) with the hole in the mounting plate. The stud (23B) on the set-down flag (23C) should be on the outside of the cam.

3. Move the set-down flag (23C) to the "up" position.

4. Carefully place the pick-up arm mounting plate (23) on the slide guide blocks (59) and (60), making sure the trip assembly (35) does not rest or bind on any portion of the slide channel assembly (19).

5. If the set-down arm and trip assembly (35) has been loosened or removed from the pick-up arm shaft (32) readjust as follows:

   a. Place the turntable, small spindle, and template (see section on NEEDLE SET-DOWN ADJUSTMENT) on the spindle post.

   b. Move the record support to the 7-inch record playing position.

   c. Push the manual reject arm (2), to start the change cycle.

   d. Slowly rotate the turntable until the slide channel assembly (19) starts to move backward. NOTE: The SPEED control should be in an "off" position for ease of operation.

   e. As the pick-up arm shaft (32) rides up on the incline (19C) of the slide channel (19), raise or lower the set-down arm and trip assembly (35) until it is in a position to be grasped by the clutch fingers (19E).

   f. Continue rotating the turntable until the slide channel moves forward to a point where the set-down arm (35B) touches the set-down flag (23C).

   g. With the fingers, move the set-down arm (35B) against the guiding edge of the set-down flag (23C).

   h. Rotate the turntable until the set-down arm (35B) is just about to lose contact with the set-down flag (23C), and place the pick-up needle directly over the line on the template.

   i. Tighten the setscrew (37) in the set-down arm and trip assembly (35).

   j. Cycle the changer several times to check the needle set-down point. Small corrections of the set-down point may be made with the set-down adjustment screw (55).

LUBRICATION

Factory lubrication should be sufficient for a long period of service. When lubrication is required, use only the following lubricants in the places specified.

Part	Lubricant
Turntable Bearing (125) & Slide Channel (19)	-E. F. Houghton "Stay-Put" #512 Grease (Motorola Part Number 11M476047)
Motor Speed Change Gears (93 & 103)	-Silicone High Temperature Lubricant (Dow Corning Corp. #DC-33 - Motorola Part Number 11M488020)

DO NOT LUBRICATE THE FOLLOWING PARTS:

Trip flag (20A)
Slide Plate & Spring Assembly (23A)
Trip Lever Arm (19B)
Set-Down Arm Assembly (35)
Drive Clutch Lever (127)

If any oil or grease should come in contact with the idler wheel tire, inside rim of the turntable, or any of the motor drive surfaces, clean with carbon-tetrachloride.

©John F. Rider

Compliments of www.nucow.com

MODEL RC-37

SERVICE HINTS

78 RPM or 33 RPM RECORDS FAIL TO DROP

1. Adjust the push-off lever (76).

2. Record center hole binding on spindle.

MECHANISM SLOW IN STARTING

1. Bad motor.

2. Grease on idler wheel (118) or on speed control pulleys (100, 101, 102).

3. Parts binding.

MECHANISM TRIPS BEFORE RECORD IS COMPLETED, OR DOES NOT TRIP AFTER RECORD IS COMPLETED

1. Adjust the wiper bracket (130) on the turntable (see section on Trip Adjustment).

CONTINUOUS CYCLING

1. Drive clutch lever (127) 180° out of phase. Reverse the position of the drive clutch lever on the drive gear (126).

2. Grease or dirt on trip flag (20A).

3. Set-down flag (23C) not being actuated by restoring lever (19F).

RECORD SUPPORT CANNOT BE ADJUSTED TO THE THREE RECORD PLAYING POSITIONS

1. Set-down cam (27A) not set properly with relation to the set-down cam stud (23B). See PICK-UP ARM MOUNTING PLATE ASSEMBLY REPLACEMENT.

PICK-UP ARM DOES NOT SET DOWN IN CORRECT POSITION

1. Adjust the set-down setscrew (55).

NEEDLE JUMPS GROOVES

1. Record changer not level.

2. Records dirty - clean with soap and water.

3. Needle not set correctly in the cartridge - it should be perpendicular to the surface of the record.

MECHANISM FAILS TO TRIP WHEN REJECT KNOB IS IS PUSHED

1. Reject rod (151) not connected.

2. Trip lever spring (21) weak or not connected.

TURNTABLE DOES NOT REVOLVE

1. No power to motor.

2. Bad motor.

3. Grease on the idler wheel (118) or on speed control pulleys (100, 101, 102).

4. Turntable not seated properly.

45 RPM RECORDS FAIL TO DROP

1. Drive gear (126) does not mesh correctly with the cycle gear.

2. Record center hole binding on spindle.

REPLACEMENT PARTS LIST

NOTE: When ordering parts specify model number of set in addition to part number and description of part.

Ref. No.	Part No.	Description
1	1X691802	Mounting Plate Riveted Assembly (includes items 1 through 6) .
2	45B691361	Arm, manual reject .....
3	5A691472	Rivet, shoulder .....
4	46A691227	Stud, trip slide cocking .....
5	5K600898	Rivet, shoulder .....
6	46A691273	Stud, reject plate slide .....
7	1X691803	Cycle Gear, Shaft & Roller Assembly
8	4A691767	Washer, spring .....
9	45A691256	Cam, record drop (45 RPM) .....
10	4S7569	Washer, flat: 5/16 x .145 x .027; cad pl .....
11	3S7247	Screw, machine: 6-32 x 3/16; slotted hex head lockscrew; cad pl .....
12	46A691309	Stop, timing .....
13	42A600415	Clip .....
14	1X691843	Reject Plate & Roller Assembly .
15	41A76925	Spring, coil tension .....
16	41A600699	Spring, manual reject .....
17	9A470260	Receptacle, 1-prong .....
18	3S7506	Screw, sheet metal: #6 x 1/4 PKZ plain hex head; cad pl.....
19	1X600757	Slide Channel Assembly: complete, includes items 20, 21 and 22....
20	1B600748	Trip Flag and Trip Rod Assembly .
21	41A691469	Spring, trip lever arm actuating
22	41A14244	Spring, tension coil .....
23	1X600761	Set-Down Flag and Pick-up Arm Mounting Assembly: complete; includes items 24 through 29.....
24	41A600766	Spring, set-down flag detent...
25	5S7769	Rivet: .088 x 3/32 stl; .....
26	41A691282	Spring, slide plate .....
27	1X691813	Set-Down Cam & Gear Assembly .
28	4K692188	Washer, "C" .....
29	5A790684	Grommet, rubber .....
30	1X691815	Pick-up Arm Brkt. & Stud Assembly..
31	3A691288	Screw, pick-up arm adj .....
32	47A691221	Shaft, pick-up arm .....
33	46A691268	Pin, pick-up carriage .....
34	3S3863	Setscrew: 4-40 x 1/4 Bristo head; cad pl .....
35	1B600752	Set-Down Arm and Trip Arm Assembly.
36	41A600856	Spring, clutch .....
37	3S3866	Setscrew: 6-32 x 3/16 Bristo head; cad pl .....
38	46C691431	Counterbalance, pick-up arm .....
39	3S1452	Screw, machine: 4-40 x 1/2 slotted binderhead; cad pl .....
40	4S7683	Lockwasher, int: #4; cad pl...
41	1X691817	Pick-up Arm Assembly: includes items 42 through 55 .....
42	45D691428	Arm, pick-up: arm only .....
43	1X691818	Pick-up Cartridge Leads Assembly
44	9A72670	Contact, pin terminal .....
45	59B691430	Cartridge, crystal: with needle (Shure) .....
46 or	59K691907	Cartridge, crystal: with needle (Electro Voice) .....
47	59K691908	Needle (for 59B691430 cartridge)...
48	59K691909	Needle (for 59K691907 cartridge)...
49	42A691429	Clip, cartridge retainer .....
50	1X691819	Pick-up Arm Plate & Bushing Assem..
51	3S490739	Screw, sheet metal: #4 x 1/4 PKZ Phillips binderhead; cad pl .
52	4S7683	Lockwasher, int: #4 cad pl...
53	3S490535	Screw, machine: 4-40 x 5/16 Phillips flat head; cad pl .....
54	41A691329	Spring, torsion .....
55	3S9710	Setscrew: 4-40 x 5/16 slotted headless .....
56	4K580282	Washer, spring: phosphor bronze.
57	4A16556	Washer, spring .....
58	3S2286	Screw, machine: 4-40 x 3/16 slotted hex head lockscrew; cad pl...

©John F. Rider

Compliments of www.nucow.com

MODEL RC-37

Ref. No.	Part No.	Description
59	46C691368	Block, slide guide .....
60	1X600895	Block, slide guide: includes item 61 .....
61	46A600738	Stud, reset .....
62	4S7651	Lockwasher, int: #8 cad pl..
63	3S2963	Screw, machine: 8-32 x 1-3/4" plain hex head; cad pl .....
64	1X691820	Record Support Housing Assembly: complete with push-off lever & gears .....
65	1X691963	Bracket Lock Assembly .....
66	5S8497	Rivet: .088 x 1/8; stl; nkl pl
67	3S7350	Screw, machine: 6-32 x 1/4; slotted hex head lockscrew; cad pl.....
68	1X691824	Record Support & Clamp Assembly: complete; includes items 69 through 74 .....
69	1X691964	Clamp Assembly, record hold-down
70	41A691279	Spring, extension .....
71	35A600113	Bumper, rubber .....
72	41A691795	Spring, push off restoring .....
73	5S691794	Rivet, shoulder .....
74	46A600523	Stud, drive .....
75	46A691243	Pin, spring retainer .....
76	47K691953	Lever, record push-off .....
77	1X691826	Push-Off Link & Bushing Assembly.
78	46A691235	Stud, slide locking .....
79	41A691466	Spring, coil .....
80	4S8279	Washer, flat: 5/16 x .125 x .027; cad pl .....
81	4K692188	Washer, "C" .....
82	64B691342	Plate, record rest cover .....
83	3S2950	Screw, machine: 4-40 x 1/4 slotted locking binderhead; cad pl ....
84	43K471634	Ball, steel .....
85	42A691405	Clip, ball bearing .....
86	41A691467	Spring, extension .....
87	59D600612	Motor Drive Assembly: complete; includes items 88 through 122 .....
88	45A691223	Pawl, speed detent .....
89	5K691481	Rivet, shoulder .....
90	37K15125	Grommet, rubber .....
91	5A12105	Eyelet, mounting .....
92	1X691965	Speed Change Shaft Assembly ....
93	44A691219	Gear, speed change .....
94	43A17431	Bushing, collar: brass .....
95	3S7113	Setscrew: 8-32 x 1/4 slab head..
96	41A691280	Spring, pawl extension .....
97	1X691966	Speed Control Turret Assembly: includes items 98 through 102 ....
98	4A691407	Washer, felt .....
99	42A691438	Clip, pulley retainer .....
100	49A691333	Pulley, speed control (78 RPM)..
101	49K691337	Pulley, speed control (45 RPM)...
102	49A691335	Pulley, speed control (33 RPM)....
103	44A691219	Gear, speed change .....
104	4A691214	Washer, turret spring: phosphor bronze .....
105	3S490530	Screw, machine: 3-48 x 3/16 slotted round head; cad pl .....
106	59C600611	Motor, phono .....
107	28A16313	Plug, phono motor: 3-prong; with shell .....
108	15A690616	Shell, phono motor plug (used with item 107) .....
109	42A600114	Clamp, phono motor plug (used with item 107) .....
110	4S7657	Lockwasher, ext: #8; cad pl...
111	3S3397	Screw, sheet metal: #8 x 5/16 PKZ plain hex head; cad pl .....
112	46A600613	Stud, motor mtg .....
113	4K600617	Washer, "C" .....
114	4K691439	Washer, insulating .....
115	41A691284	Spring, motor extension .....
116	1X691967	Idler Wheel Bracket Assembly .
117	29R3042	Lug, soldering .....
118	49A691277	Wheel, idler .....
119	42A691893	Clip, hair pin .....
120	46A691420	Pin, groove .....
121	41A691281	Spring, idler extension .....
122	29R5301	Lug, soldering .....
123	3S7279	Screw, machine: 8-32 x 5/8 slotted binderhead; cad pl .....
124	4A691286	Washer, bearing .....
125	43A691278	Bearing, turntable .....
126	44B691354	Gear, drive .....
127	1X691827	Drive Clutch Lever & Stud Assembly.
128	1X600773	Turntable Assembly: complete; includes items 129 through 134.....
129	3A691225	Screw, drive dog adjusting .....
130	7A600745	Bracket, wiper .....
131	37A600771	Wiper, plastic .....
132	4S7651	Lockwasher, int: #8; cad pl ..
133	2S7003	Nut, hex: 8-32 x 5/16; cad pl.
134	42K692053	Clip, speed .....
135	1X600775	Record Changer Base Assembly: includes items 136 through 139.....
136	1X600776	Bracket Assembly, manual reject: includes items 137 & 138 .....
137	7A600723	Bracket, manual reject actuating...
138	5K691481	Rivet, shoulder .....
139	43A600718	Bushing, manual reject shaft .....
140	3S400110	Screw, machine: 10-32 x 1-3/4" Phillips flat head; antique copper finish .....
141	4S8214	Washer, flat: 7/8 x .203 x .067
142	35A481870	Mounts, shock: rubber .....
143	43A484295	Sleeve, shock mount.....
144	2A484296	Nut, shock mount: tapered tee..
145	37A17361	Grommet, rubber .....
146	3S7205	Screw, machine: 8-32 x 1/4 slotted hex head lockscrew; cad pl ....
147	3S400218	Screw, machine: 6-32 x 1/4 Phillips binder head lockscrew; nkl pl.
148	3S7279	Screw, machine: 8-32 x 5/8 slotted binderhead; cad pl .....
149	47A600721	Shaft, manual reject .....
150	4K600617	Washer, "C" .....
151	47A600719	Rod, manual reject .....
152	36B691483	Knob, speed control .....
153	36A600725	Knob, reject control .....
154	15D691488	Housing, record support .....
155	4S8279	Washer, flat: 5/16 x .125 x .027; cad pl .....
156	3S400038	Screw, thread cutting: #4 x 5/16; type 25; plain hex head cad pl .....
157	15C691393	Cover, housing .....
158	3S490532	Screw, thread cutting: #2 x 3/8 PKF Phillips oval head; nkl pl ....
159	15C691395	Cover, slide .....
160	42A691415	Fastener, slide cover .....
161	55B691391	Release Hinge, record support slide; chrome pl .....
162	7B691418	Bracket, slide release hinge.....
163	47A691424	Shaft, slide release hinge .....
164	3S490352	Screw, machine: 2-56 x 5/32 slotted binderhead; cad pl .....
165	41A691463	Spring, retainer .....
166	4S8406	Lockwasher, int: #2; cad pl..
167	47C691499	Spindle, record: 33 & 78 RPM.....
168	1X691832	Spindle, record: 45 RPM; complete
169	1X691834	Drive Gear & Shaft Assembly .....
170	42A691283	Clip, shaft .....
171	1X691835	Record Support & Separator Assembly
172	41A691406	Spring, compression .....
173	1X691836	Center Post Cap & Spring Assembly..
174	41A691253	Spring, spindle cap .....
175	3S7164	Screw, machine: 6-32 x 1/4 slotted binderhead; cad pl .....
176	4S7666	Lockwasher, ext: #6; cad pl..
177	3S488082	Screw, machine: 6-32 x 1-3/4" slotted round head; cad pl .

©John F. Rider

Compliments of www.nucow.com

Compliments of www.nucow.com

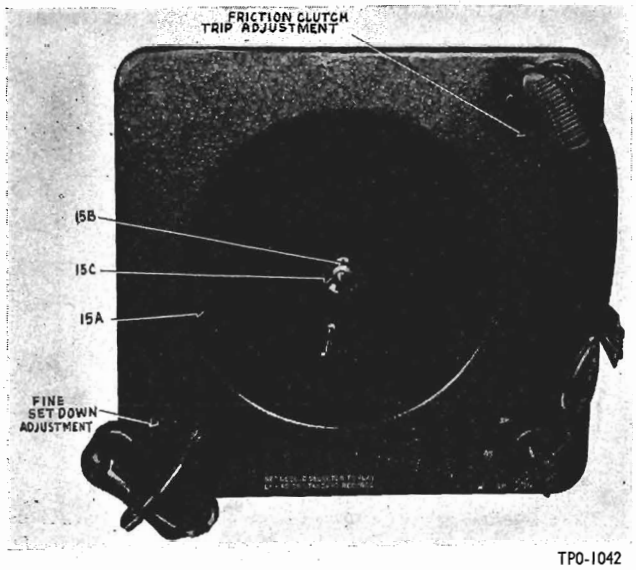

Figure 1. Top View of Record Changer

ADJUSTMENT PROCEDURES

Spindle Adjustment

The spindle should be checked for perpendicularity when changer is out of cycle. To adjust, bend the ear on the push-off lever assembly; bending toward spindle spring will throw top of spindle away from record shelf.

Record Shelf

Place gauge on the 10″ record shelf with changer in manual position. Loosen the two screws holding the shelf to the base plate. Adjust pushoff saddle location so that without flexing spindle away from saddle, but with all clearances taken up, the edge of the gauge fits snugly against the edge of the raised portion of the shelf. Tighten screw. CAUTION: This adjustment must be made immediately after completing a change cycle.

Tone-Arm Height and Lift

With the changer out of cycle, and the tone-arm free, set the arm over the base plate. The needle point should be 1/8″ ±1/16″ above the base plate. To adjust the clearance, bend the protruding ear of the swivel post (at the rear of the tone-arm heel). Bending the ear upward decreases the clearance, downward increases the clearance. Raise the tone-arm to its maximum height, and place it against the rest post. There should be approximately 3/32″ clearance between the lower edge of the tone-arm and the top of the rest-post hook. Adjust the ear on the swivel until a mean is reached between the correct rest-post clearance and base-plate clearance.

Vertical Timing

Adjust by bending, the end of the lifting lever, which attaches to the lift cord, so that there is 1/32″ to 1/16″ slack in lift cord for all tone-arm positions between the tone-arm rest-post and spindle when changer is out of cycle. Check by cycling changer and noting if lifter lever and pull cord will raise tone-arm to its maximum heights.

Setdown

Set record shelf to 12″ position. Set the eccentric stud to its center position. Place a 7″ record on the turntable, set the record shelf to 7″ position, and cycle changer by hand until tone-arm is ½″ above record. Loosen hex-head clamp screw on friction clutch and rotate turntable until needle is over a point 1/8″ in from record edge. Tighten clamp screw and check by putting changer through another cycle. Remove 7″ record. Set record shelf to 10″ position and place a 10″ record on turntable. Rotate turntable until needle is just above record. If needle is not 1/8″ in from record edge an adjustment may be made by bending the ear of the setdown cam that is in contact with the eccentric stud. Bending the ear outward will move the setdown position away from the spindle, bending the ear in toward the shelf spindle will move the setdown point toward the spindle. Recheck. Using a 12″ record and shelf set to 12″ position repeat as for 10″ record, bending the corresponding ear for adjustment.

When the setdown is equal for the three record sizes (7″, 10″, and 12″) a fine adjustment is provided in the form of an eccentric stud available through a hole in the base plate by the record shelf stanchion. This adjustment will vary the setdown position of ALL size records a total of 3/16″. Do not use this adjustment unless it is desired to vary all three setdown positions on equal amount.

Trip

The trip plate assembly should be so adjusted that when the ear of the reset arm is contacting the peak point of the reset cam, the finger of the trip plate supporting the dog latch will

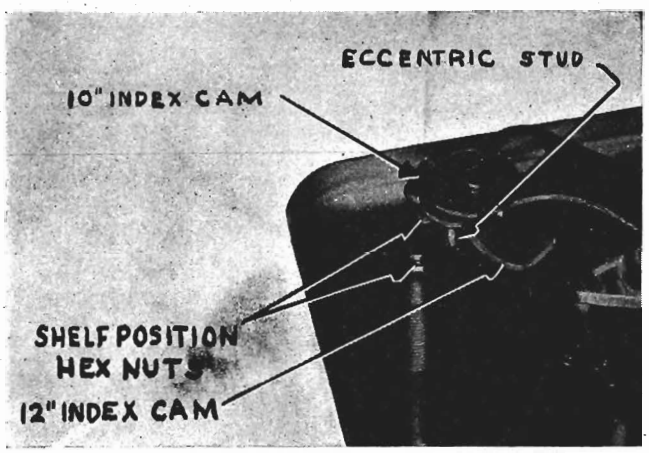

Figure 2. Cam Adjustment

©John F. Rider

Compliments of www.nucow.com

engage the latch by 1/16"; or twice the thickness of latch metal. The amount of engagement between the finger and the latch is adjustable by bending the ear of the trip plate. Bending the ear inward decreases the amount of engagement, bending the ear outward increases the amount of engagement. This adjustable ear is accessible through the large hole in the bridge and should be bent by using long nose pliers. CAUTION: Too much engagement will prevent tripping.

After the trip-latch engagement is set, the friction clutch should be adjusted. This is a screw adjustment accessible when the tone arm is on the rest-post, through a hole in the base plate by the tone-arm stanchion. Turn the screw, counterclockwise, until just tight, then loosen one turn. Check by playing several records. If changer pre-trips, loosen screw (turn clockwise) slightly.

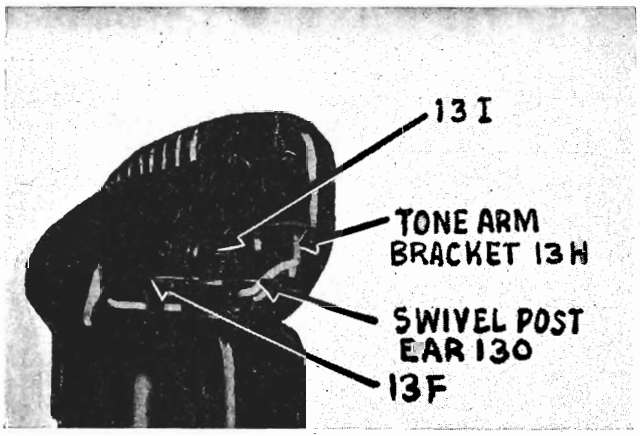

Figure 3.

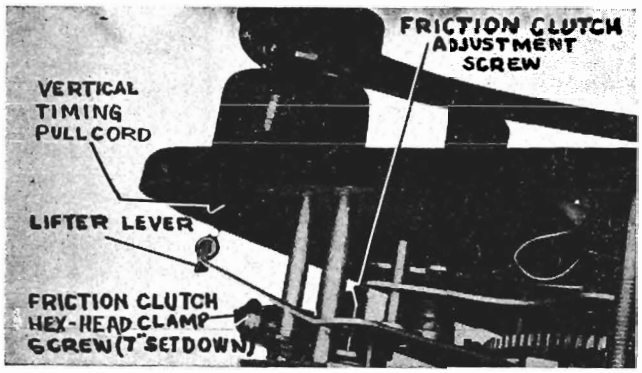

Figure 4.

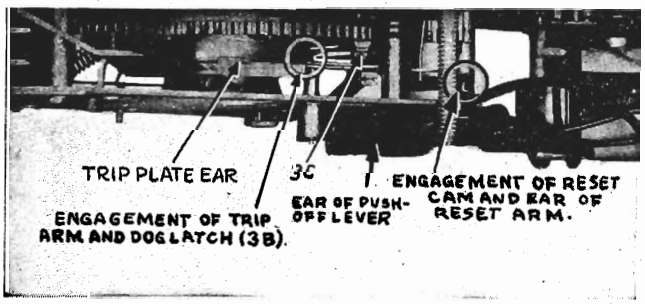

Figure 5.

LUBRICATION INSTRUCTIONS

Lubricants

Oil S.A.E. 20
Grease Texaco Motor Cup Grease (unless otherwise specified)

Parts Not To Be Lubricated

Drive Shaft
Motor Pulley
Drive Belt
Idler Tire
Dog Latch (on cam gear)
Lifting Lever (where dog rides)
Trip Plate Assembly
Friction Washer
Friction Finger
Spindle Latch (may be lubricated with powdered graphite)

Parts To Be Greased

1. Switch lever where it slides on motor board.
2. Slot where switch lever rides.
3. Slots where control link slides.
4. Control link slot.
5. Hole where record shelf shaft rides.
6. Detents for record shelf.
7. Hold-down assembly.
8. Hold-down shaft.
9. Setdown cam where eccentric stud rides.
10. Cam gear; all cam surfaces and gear teeth, except dog latch.
11. Ball bearing; if disassembled, as they are replaced in race.
12. Lifting lever; where lever contacts cam gear.
13. Pushoff lever; where end slides on bridge, where stud rides in slot of bridge, and at pivot pin.
14. Stud of friction clutch; grease ends of return lever and tone arm actuator where they engage stud of friction clutch assembly also stud where these two levers make contact.
15. Cam surface of of idler-wheel lifter.
16. Detent surfaces.
17. Guide slots of shelter plate.
18. Extension of idler shaft in contact with lower shifter plate.

Parts To Be Oiled

1. Cam Gear Spindle.
2. Trip plate assembly pivot; in bushing only.
3. Return lever roller.
4. Cam gear index lever roller.
5. Control knob shafts.
6. Tone arm shaft where it rotates in bridge.
7. Tone arm pivot pin where it goes through holes in bracket.
8. Turntable bearings; top and bottom.
9. Reject lever pivot.
10. Actuator spindle; oil spindle, assemble return lever after oil dimples where it rides on base plate, assemble washer, setdown lever, cam gear index lever, washer, and tone arm actuator; being sure oil is applied between bearing surfaces.
11. Idler support shaft.
12. Idler Shaft.
13. Slider bar; four points.
14. Two shift roller pins.
15. Pulley shaft.
16. Under pivot bushing of shifter plate.

Caution

When lubricating the motor, remove the rubber belt and idler wheel. When lubrication is completed, be sure the motor shaft and pulley are free from oil and grease. Failure to observe this precaution may result in slippage.

Dow Corning "DC-4"

Apply to the contacts of the cartridge contact plate, and to the dimple of the cartridge returning spring.

©John F. Rider

Compliments of www.nucow.com

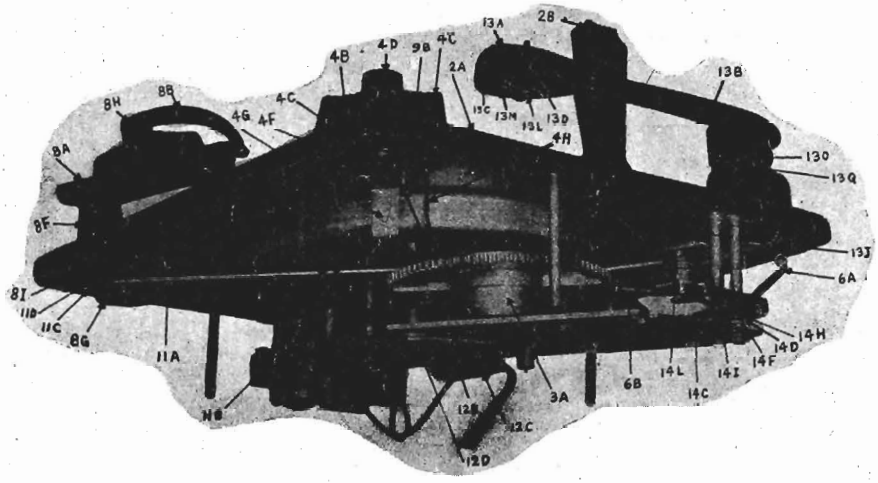

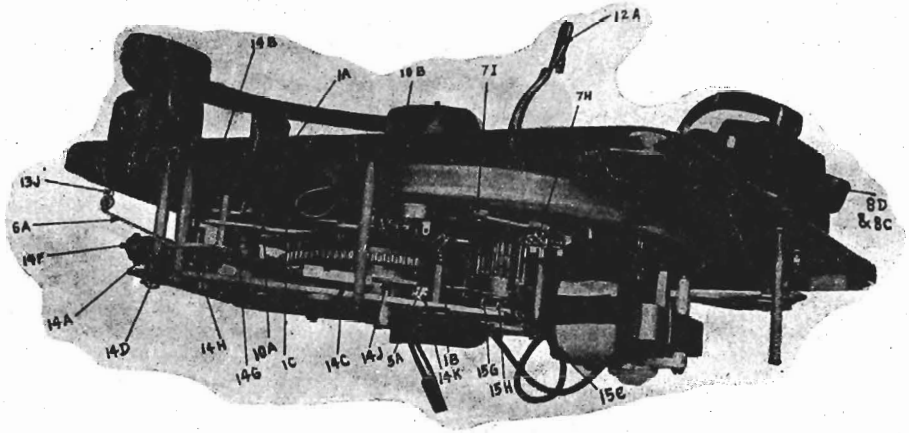

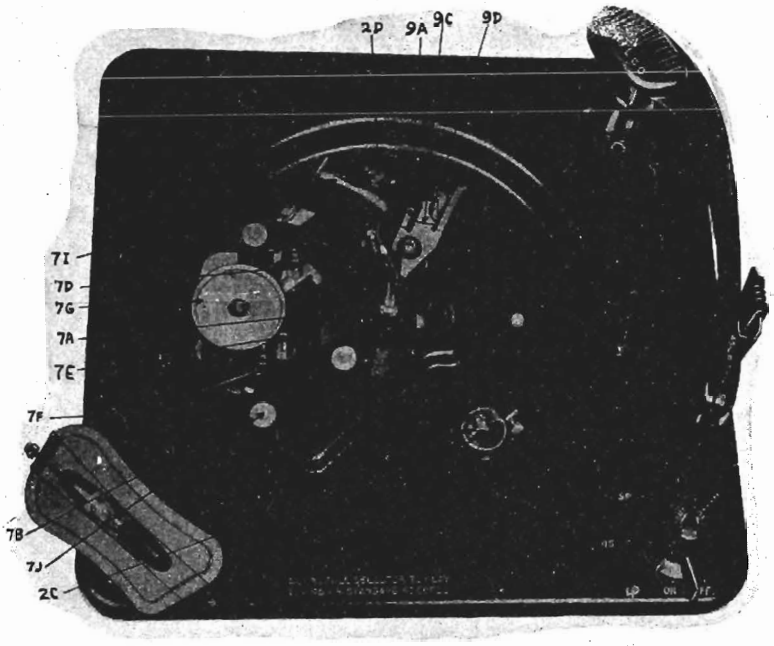

Figure 6. Parts Locations

©John F. Rider

Compliments of www.nucow.com

MODEL M-22

M-22 PARTS LIST

		Description	Part No.
1.	(a)	Actuator, tone-arm	76-6502
	(b)	Spring, compression, actuator spindle	56-8087
	(c)	Spring, actuator	56-8095
2.	(a)	Base plate, tone-arm rest, and tone-arm stanchion	76-5892
	(b)	Bumper, tone-arm, rubber	54-8136
	(c)	Switch, motor power	42-1867
	(d)	Switch, pick-up	42-1873
3.	(a)	Cam Gear	76-5905
	(b)	Dog latch	56-8138
	(c)	Pin	56-8139
4.	(a)	Control Assembly	
	(b)	Knob, on-off	54-4786
	(c)	Knob, speed control	54-4767
	(d)	Knob assembly, Man., Aut., Rej.	76-5901
	(e)	Shaft and bar assembly, speed change	76-5899
	(f)	Shaft and crank assembly, Man., Aut., Rej.	76-5900
	(g)	Lever, on-off switch	56-8090
	(h)	Link, speed change control	56-8091
	(i)	Ring, retaining, reject shaft	1W42295FE7
	(j)	Ring, retaining, switch lever	1W42253FE7
5.	(a)	Index Lever, cam gear	76-5895
	(b)	Spring, index lever	56-8094
6.	(a)	Lifter Lever	56-8132
	(b)	Spring, lifter lever	56-8133
7.	(a)	Motor, 117v, 60c	35-1451
	(b)	Shock mount (3)	54-4501
	(c)	Spacer, mounting (3)	56-4926-1FA3
	(d)	Spring, compression	56-8252
	(e)	Pulley assembly	45-6499
	(f)	Drive belt	54-7939
	(g)	Idler wheel	76-5267
	(h)	Grommet, rubber, speed selector lever	27-4707
	(i)	Plate, motor speed shift	56-8083
	(j)	Screw, motor mounting (3)	1W21561FA3
		*Motor, 117v, 60c	35-1452
		Idler Wheel	45-6559
		Pulley	45-6558
		Shockmounts (3)	54-4501
		*Motor, 117v, 60c	35-1455
		Idler Wheel	45-6614
		Pulley	45-6615
		Shockmounts (3)	54-4826
8.	(a)	Record Shelf and Shaft Assembly	76-5914
	(b)	Hold-down assembly	76-5897
	(c)	Pin, record hold-down	56-8300
	(d)	Shaft, record hold-down	56-8299
	(e)	Spring, hold-down	56-8164
	(f)	Push-off saddle	56-8078
	(g)	Washer, cupped	56-8089
	(h)	Fulcrum arm, hold-down	56-8301
	(i)	Spring, record shelf	56-8088
9.	(a)	Reject Lever	56-8079
	(b)	Link, reject	56-8084
	(c)	Spring, reject	56-8080
	(d)	Spring, detent	56-8081
10.	(a)	Return Lever	76-5893
	(b)	Spring, return lever	56-8092
11.	(a)	Setdown Lever	76-5894
	(b)	Spring, setdown (lever to bridge)	56-8093
	(c)	Cam, setdown	56-8149
	(d)	Nut	56-7042
12.	(a)	Spindle	76-5909
	(b)	Spring, spindle	56-8131
	(c)	Push off lever assembly	76-5908
	(d)	Lever, spindle	56-8130
13.	(a)	Tone-arm Assembly (complete)	35-2710
	(b)	Tone-arm shell	35-2707
	(c)	Retainer plate, front	56-6795
	(d)	Retainer plate, rear	56-8415
	(e)	Spring, cartridge retaining	56-6796
	(f)	Pin, shaft and swivel	56-7011
	(g)	Screw, shoulder, swivel mounting (3)	56-7408-1
	(h)	Bracket, mounting for shaft and swivel	56-8123
	(i)	Spring, needle pressure	56-8124
	(j)	Pull-cord, vertical timing	76-2982-4
	(k)	Contact plate	76-4647
	(l)	Cartridge (includes needle)	76-4649
	(m)	Needle	45-9588
	(n)	Needle, sapphire tips	45-9589
	(o)	Swivel assembly	76-5911
	(p)	Shock-mount, swivel mounting (3)	54-4729
	(q)	Washer, friction (plastic)	54-8103
	(r)	Spring, tone arm shaft	56-8773
14.	(a)	Trip Arm Assembly	76-5910
	(b)	Screw, friction trip adjustment	56-8109
	(c)	Trip finger, friction	56-8112
	(d)	Washer, friction clutch, (plastic) (2)	54-8142
	(e)	Spring, friction trip adjustment	56-8111
	(f)	Nut, clamp screw	56-7042
	(g)	Spring, friction screw lock	56-8108
	(h)	Plunger	56-8110
	(i)	Washer	56-8113
	(j)	Trip plate assembly	76-5907
	(k)	Spring, trip plate	56-8117
	(l)	Washer, lead (4)	8W52297
15.	(a)	Turntable	35-2711
	(b)	Retainer, turntable	56-8097
	(c)	Washer, bearing (2)	56-8127
	(d)	Retainer, ball, brass	56-8128
	(e)	Cover, ball	56-8129
	(f)	Ball, 1/8" diam. (3)	5W2017
	(g)	Reset cam, trip	54-8139
	(h)	Washer, neoprene	54-8140
	(i)	Ring, retaining	1W42311FE7
		Changer Mounting	
		Spring, heavy (3)	56-7059FA9
		Spring, light (3)	56-7059-1FCP
		Sleeve (3)	54-7798
		Speed nut (3)	W-2554FCP

* This motor not carried, order motor 35-1451. If motor 35-1455 is replaced by motor 35-1451 order (3) shockmounts, part number 54-4501.

©John F. Rider

Compliments of www.nucow.com

MODELS RP-190,
RP-190-1, RP-190-2

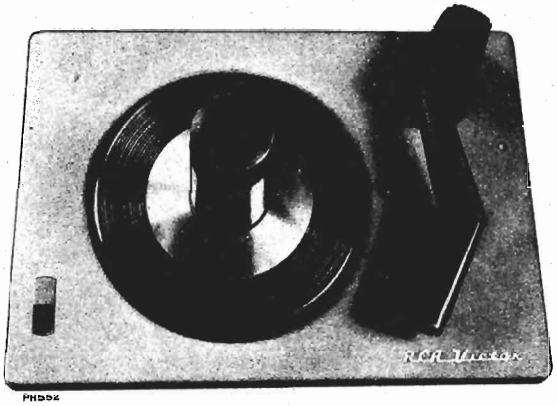

Primarily RP190-1 and RP190-2 are the same excepting the pickup cartridge, pickup cable, power cable and plugs.

This mechanism will be used in the following instruments:

Group	Instruments
RP190-1	9Y510
RP190-1	45J2
RP190-2	A82
RP190-2	A91
RP190-2	A108
RP190-2	45W9

SPECIFICATIONS

Turntable speed	45 r.p.m.
Records used	RCA seven-inch fine groove
Record capacity	Up to 12 records
Pickup force	Approx. 5 grams
Stylus tip radius	.001 inch
Power supply	105-125 volts, 60 cycle, a.c.

CAUTION

1. Avoid handling the pickup arm when the mechanism is in cycle.
2. Do not use force to release a jam.
3. Do not try to remove the records on the turntable if the turntable is stopped in cycle.
4. If the separator knives protrude from the center post when the mechanism is out of cycle, push the "start-reject" knob to reject and the condition should be corrected automatically.

AUTOMATIC OPERATION

1. Place a stack of records over the center post, with the desired selections upward, the last record to be played on top.
2. Push the "start-reject" knob to "start" and let go. The mechanism will automatically play in sequence one side of each record stacked on the separator shelves.
3. To reject a record being played, push the "start-reject" knob.
4. At conclusion of playing and as the last record is being repeated, lift the pickup arm and place on its rest. Turn off the power to the drive motor by pulling forward on control knob.
5. Remove the stack of records by lifting them straight up.

LUBRICATION

A light machine oil (SAE No. 10) should be used to oil the bearings of the drive motor.

On all bearing surfaces, excepting the motor bearings, Houghton STA-PUT No. 320, or equivalent, should be used. On all other sliding surfaces, STA-PUT No. 512, or equivalent, is recommended. STA-PUT can be purchased from E. F. Houghton & Co., 303 W. Lehigh Ave., Philadelphia, Pa.

(Do not oil or grease record separator shelves.)

It is important that the drive motor spindle and the rubber tire on the idler wheel be kept clean and free from oil or grease, dirt, or any foreign material at all times. Carbon tetrachloride or naphtha is satisfactory for cleaning these parts.

Function of Principal Parts

Trip Lever (77)

The trip lever is mounted on the bottom end of the pickup arm vertical pivot shaft. The function is to transfer the movement of the pickup arm to parts of the operating mechanism below the motor board. The end of the trip lever contacts stud on cycling cam thereby starts tripping action.

Pickup Arm Return Lever (70)

The function of the pickup arm return lever is to provide a force necessary to push the pickup into landing position. The end of the pickup arm return lever is curved so as to provide a stop for trip lever. This stop determines landing position of the pickup.

Reject Lever (22)

The function of the reject lever is to transfer the action of the control knob to the cycling cam thereby starting a change cycle.

Muting Switch (68)

The function of the muting switch is to short the pickup leads to prevent amplifying of mechanical noise, of the merchanism during change cycle.

Cycling Cam (85)

The cycling cam is mounted on the cycling slide. The function of the cam is to transfer the rotary motion of the turntable shaft into sliding motion of the cycling slide.

Stop Dog (82A)

The stop dog is mounted on the end of cycling slide. The function of the stop dog is to engage the ratchet wheel on the separator shaft and prevent it from rotating, at the exact moment during change cycle.

Ratchet Wheel (53)

The function of the ratchet wheel located on the end of the separator shaft is to keep the separator shaft stationary at the proper time, so as to actuate the separator mechanism inside the centerpost.

Cycling Slide (82)

The cycling slide is the main connecting medium between the various moving parts.

©John F. Rider

Compliments of www.nucow.com

MODELS RP-190,
RP-190-1, RP-190-2

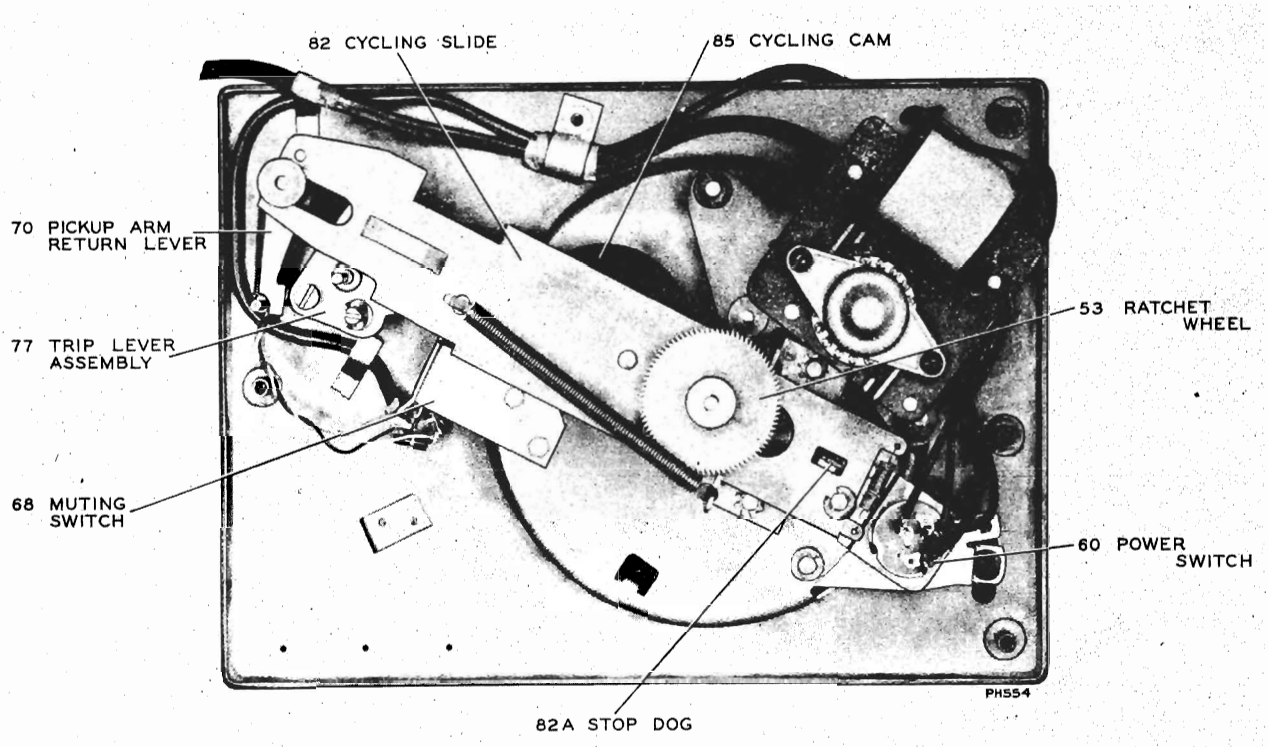

Fig. 1

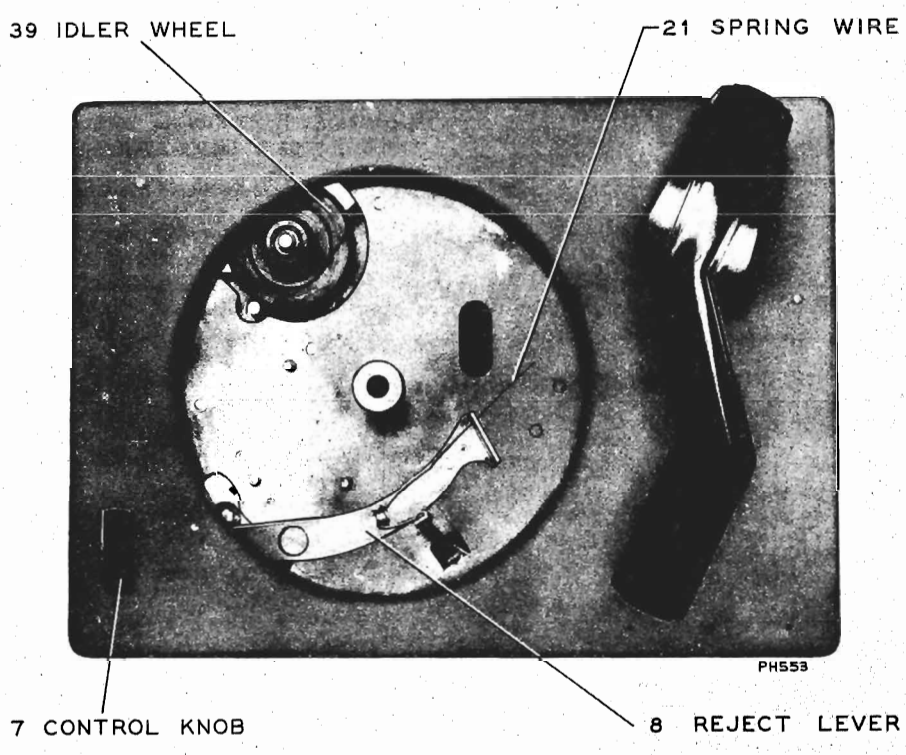

Fig. 2

©John F. Rider

Compliments of www.nucow.com

Cycle of Operation

FUNCTION	EXPLANATION
Place a stack of records over centerpost.	1. Records rest on separator shelves protruding from either side of the centerpost. 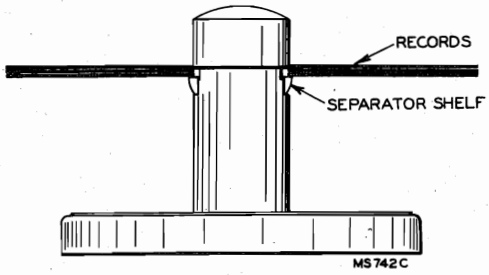 *Fig. 3*
Push control knob to reject.	1. The control first actuates the power switch applying power to the drive motor. This starts the turntable rotating. 2. Further movement of the control knob actuates the reject lever assembly (8) which contacts the stud mounted on the eccentric cycling cam and moves it slightly. 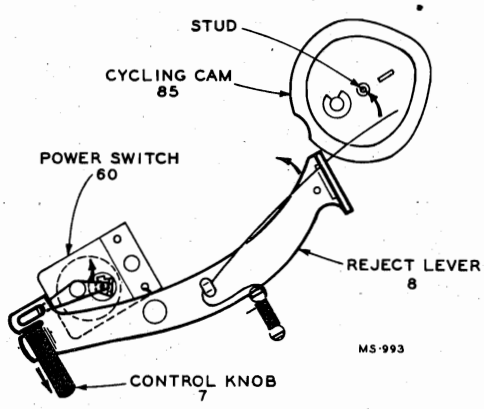 *Fig. 4*
Cycling starts.	1. The slight movement of the eccentric cycling cam (85) is sufficient for engagement with the rotating knurled roller (62) mounted on turntable shaft. 2. The eccentric cycling cam which is mounted on the cycling slide (82) pushes the slide in the direction of the pickup arm pivot. In so doing tension is increased on the slide return spring (89). 3. The tab on the cycling slide moves back permitting muting switch to close. 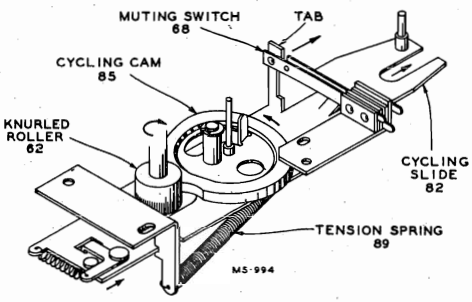 *Fig. 5*
Pickup raises from the rest.	1. As the cycling slide continues to move in the direction of the pickup arm pivot the small incline pressed in the slide causes the elevating rod (74) to lift the pickup arm from the rest. 2. The raised pickup arm moves inward slightly from the inward force of the pickup arm return lever (70), until the stud on the trip lever (77) assembly comes against edge of the cycling slide. 3. The cycling slide continues to move further, which pushes the trip lever back. The eccentric landing adjustment stud (79) contacts and pushes the pickup arm return lever (70) against the tension of the return spring (69). 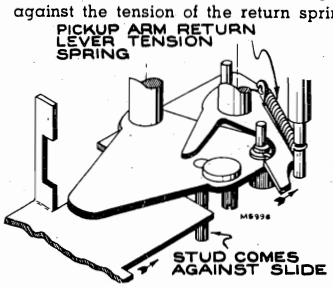 *Fig. 6* 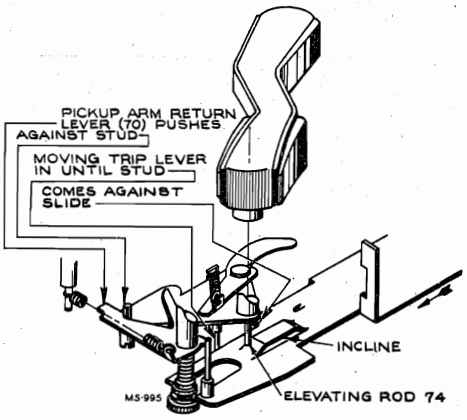 *Fig. 7*

© John F. Rider

Compliments of www.nucow.com

MODELS RP-190,
RP-190-1, RP-190-2

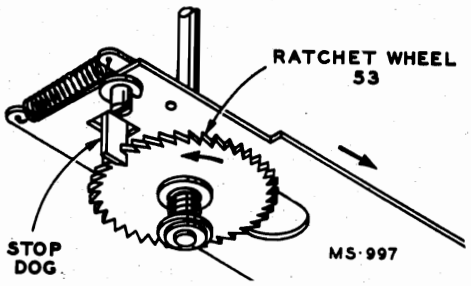

Fig. 8

Separator knives separate the lower record from the stack and the lower record drops to the turntable.

1. As the cycling slide reaches the limit in its movement in the direction of the pickup arm pivot, the stop dog mounted on the slide engages the rotating ratchet wheel (53).
2. The ratchet wheel and separator shaft (6) then remains stationary and the turntable continues to rotate.
3. The separator shelves and knives are coupled together in such a manner that the flattened end of the separator shaft pushes the knives out, which in turn pulls the opposite shelves in.
4. As the shelves recede, the separator knives mounted above the shelves move out and separate the lower record of the stack and support the remaining records while the lower record drops to the turntable.

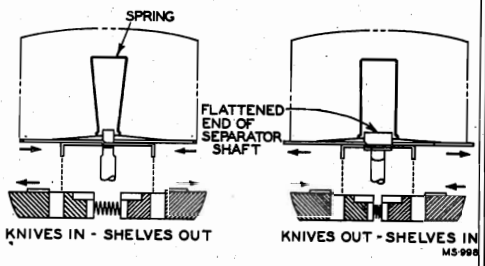

Fig. 9

Pickup moves in for landing.

1. The cycling slide moves away from the pickup arm pivot, due to the force produced by the tension spring (89) keeping the eccentric cycling cam against the rotating knurled roller (62). The knurled roller at this time is returning to the smaller diameter of the cam.
2. The stud on trip lever assembly follows the slide due to the force produced by the action of the pickup arm return lever.
3. After the slide has moved back a short distance the stud on the trip lever assembly no longer follows the slide since the landing adjustment stud comes against the curved stop on the end of the pickup arm return lever. At this moment the pickup is directly above the point of landing.
4. As the cycling slide completes the return movement the elevating rod slides down the incline which lowers the stylus on the record.

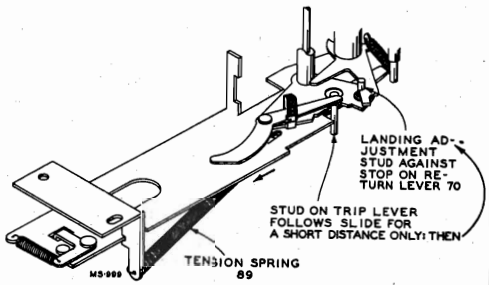

Fig. 10

Cycle completed and the record plays.

1. The tab on the cycling slide contacts and opens the muting switch.
2. The stud on the cycling slide pushes pickup arm return lever back to permit free motion of the pickup arm.
3. The change cycle is completed as the cycling slide comes against the stop bracket, at which time the knurled roller rotates in the cut away section of the cam.
4. As the record plays and the pickup arm moves inward.
5. When the stylus reaches the end of the selection the end of the trip lever contacts the stud on the cycling cam, and pushes it slightly.
6. The slight movement of the cycling cam causes engagement with the rotating knurled roller, thereby starting a change cycle.
7. The mechanism repeats the preceding sequence of operations until the last record of the stack has dropped and has been played. This selection will be repeated until the pickup is lifted and placed on the rest.

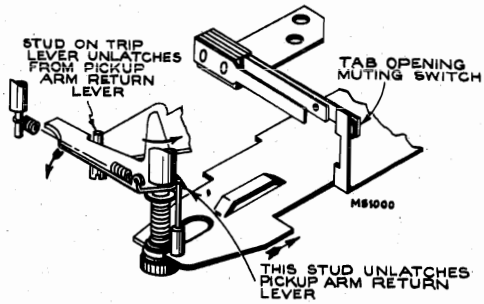

Fig. 11

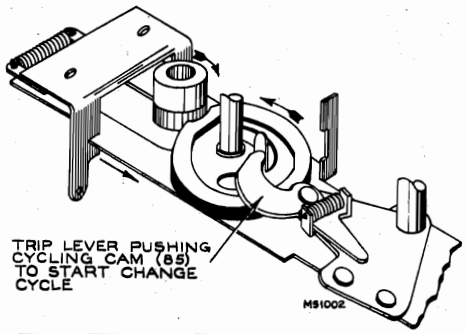

Fig. 13

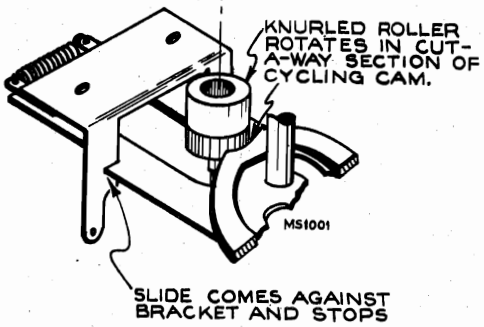

Fig. 12

©John F. Rider

Compliments of www.nucow.com

MODELS RP-190,
RP-190-1, RP-190-2

DO YOU KNOW?

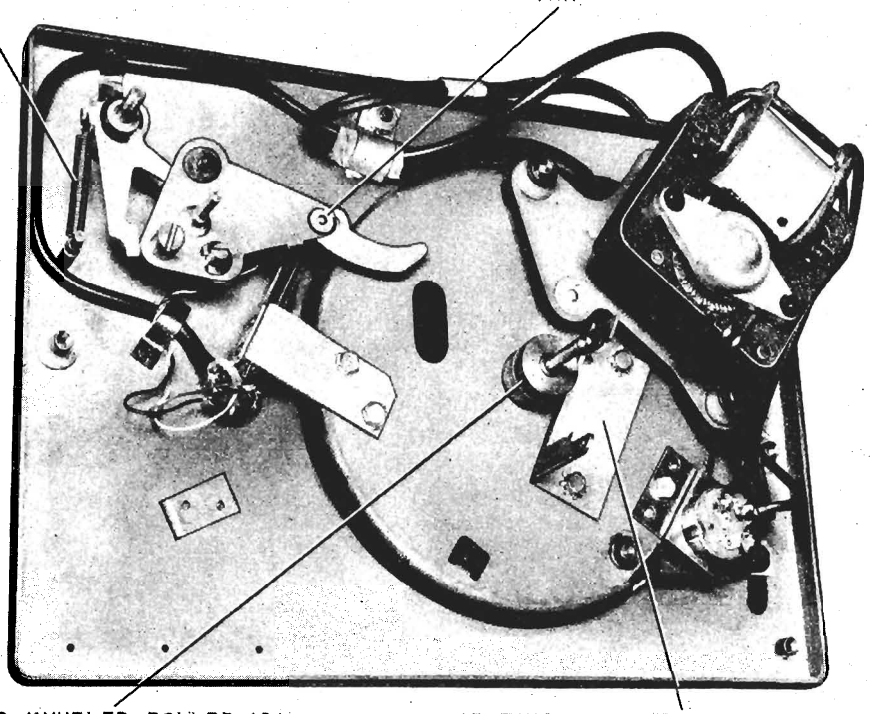

Fig. 14

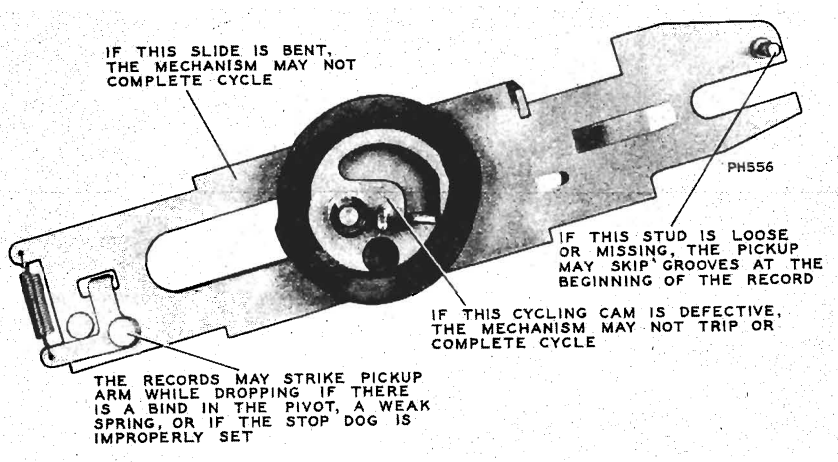

Fig. 15

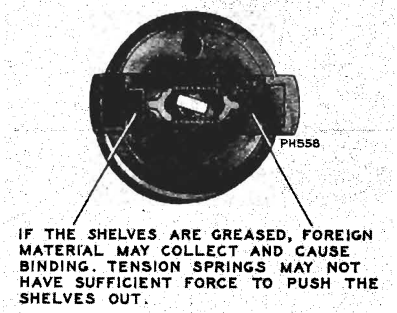

Fig. 16

©John F. Rider

Compliments of www.nucow.com

MODELS RP-190,
RP-190-1, RP-190-2

SERVICE HINTS

REJECT CONTROL FAILS TO OPERATE

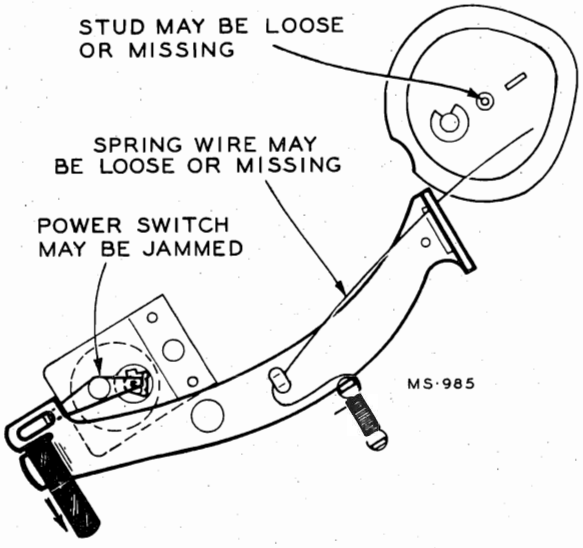

Fig. 17

MECHANISM FAILS TO SEPARATE RECORDS PROPERLY

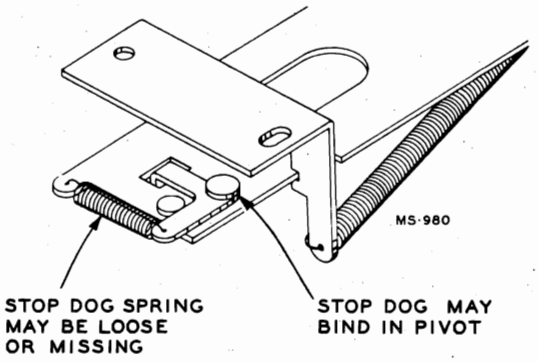

Fig. 18

RECORD STRIKES PICKUP ARM WHEN DROPPING

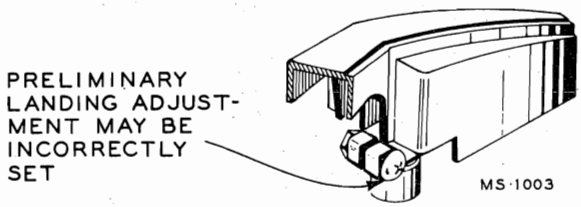

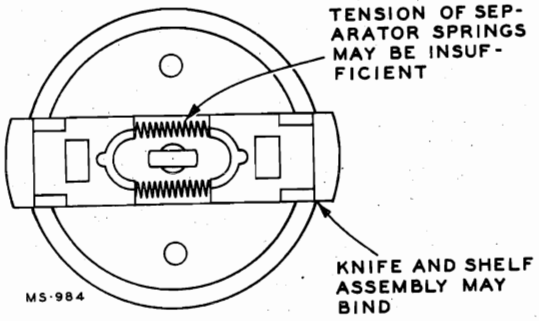

Fig. 19

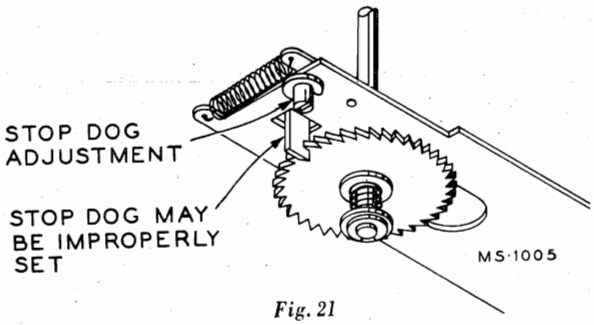

Fig. 21

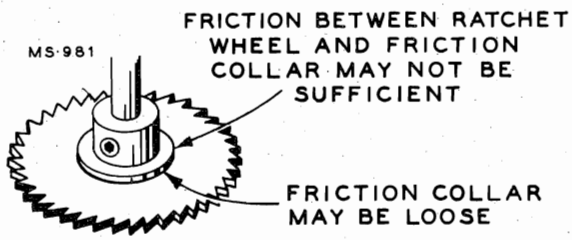

Fig. 20

©John F. Rider

Compliments of www.nucow.com

MODELS RP-190,
RP-190-1, RP-190-2

PICKUP FAILS TO LAND PROPERLY

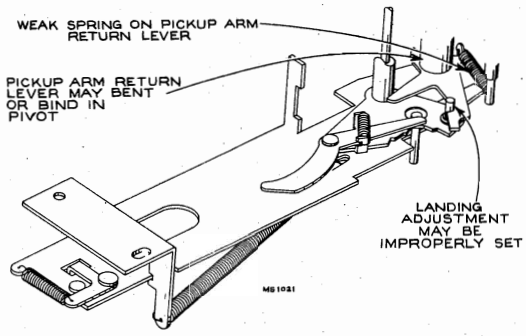

Fig. 22

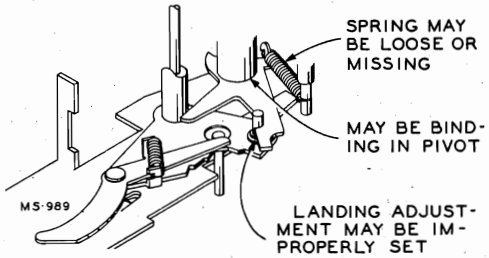

Fig. 23

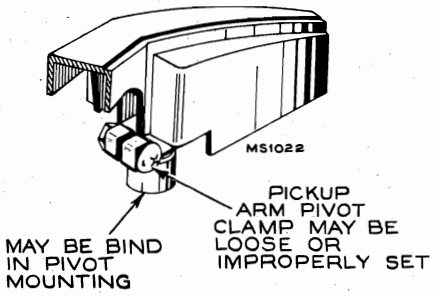

Fig. 24

DISTORTED OR NO OUTPUT

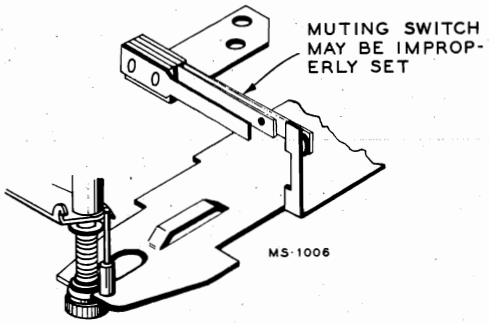

Fig. 28

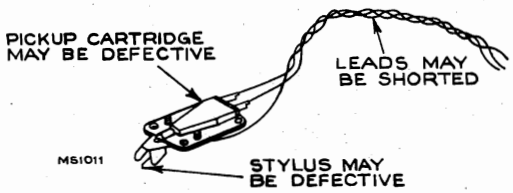

Fig. 29

PICKUP SKIPS GROOVES

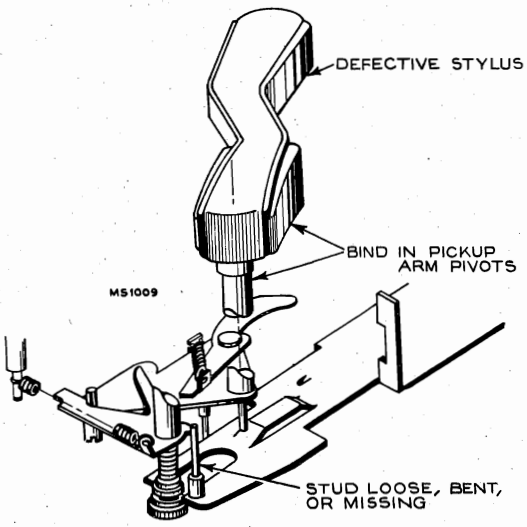

Fig. 25

MECHANISM FAILS TO TRIP

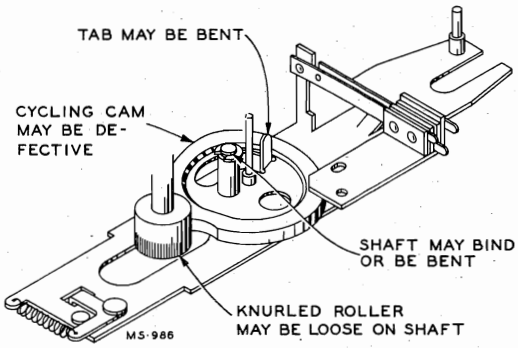

Fig. 26

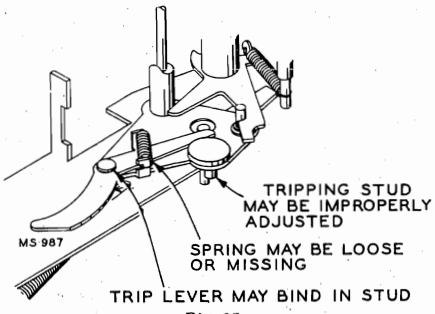

Fig. 27

PREMATURE TRIPPING

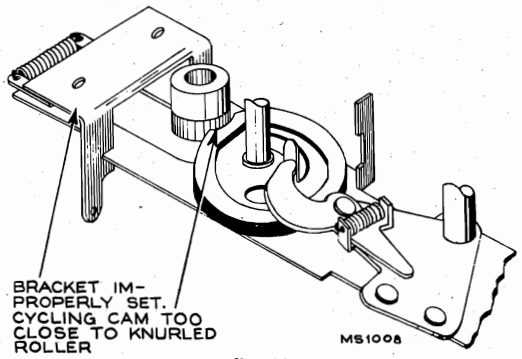

Fig. 30

© John F. Rider

Compliments of www.nucow.com

MODELS RP-190,
RP-190-1, RP-190-2

"WOW" OR SPEED VARIATION

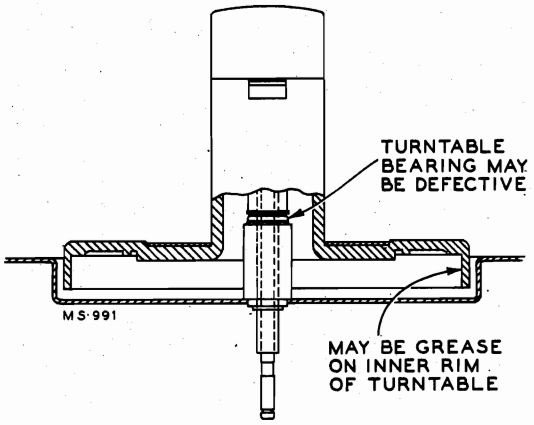

Fig. 31

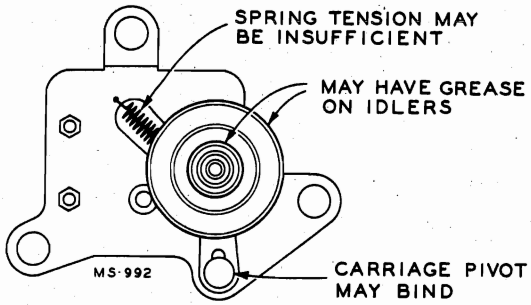

Fig. 32

RUMBLE

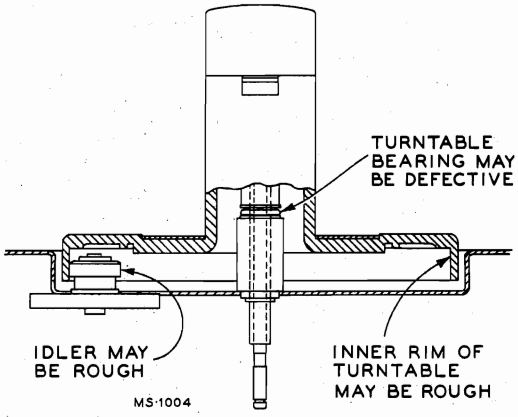

Fig. 33

CONTINUOUS TRIPPING

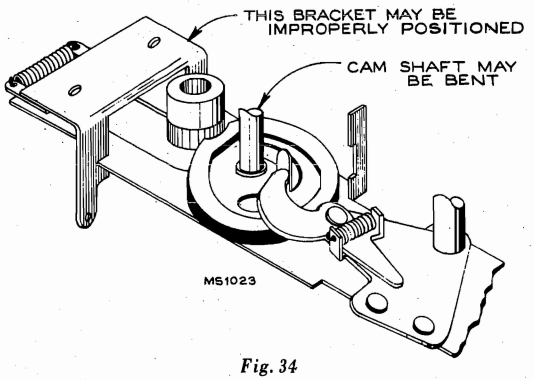

Fig. 34

MECHANISM FAILS TO COMPLETE CYCLE

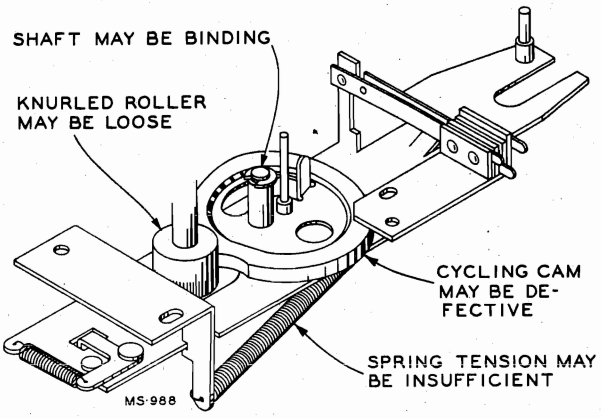

Fig. 35

ADJUSTMENTS

LANDING

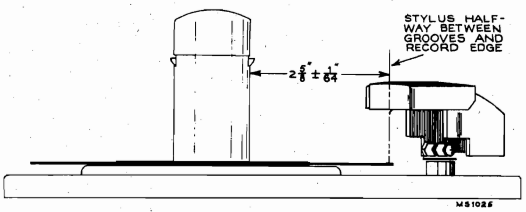

Fig. 36

TRIPPING

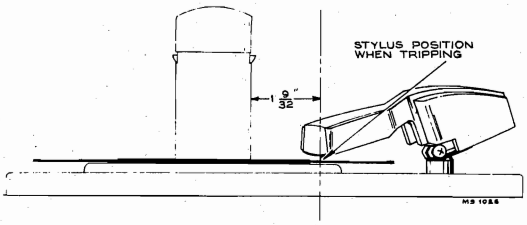

Fig. 37

©John F. Rider

Compliments of www.nucow.com

MODELS RP-190,
RP-190-1, RP-190-2

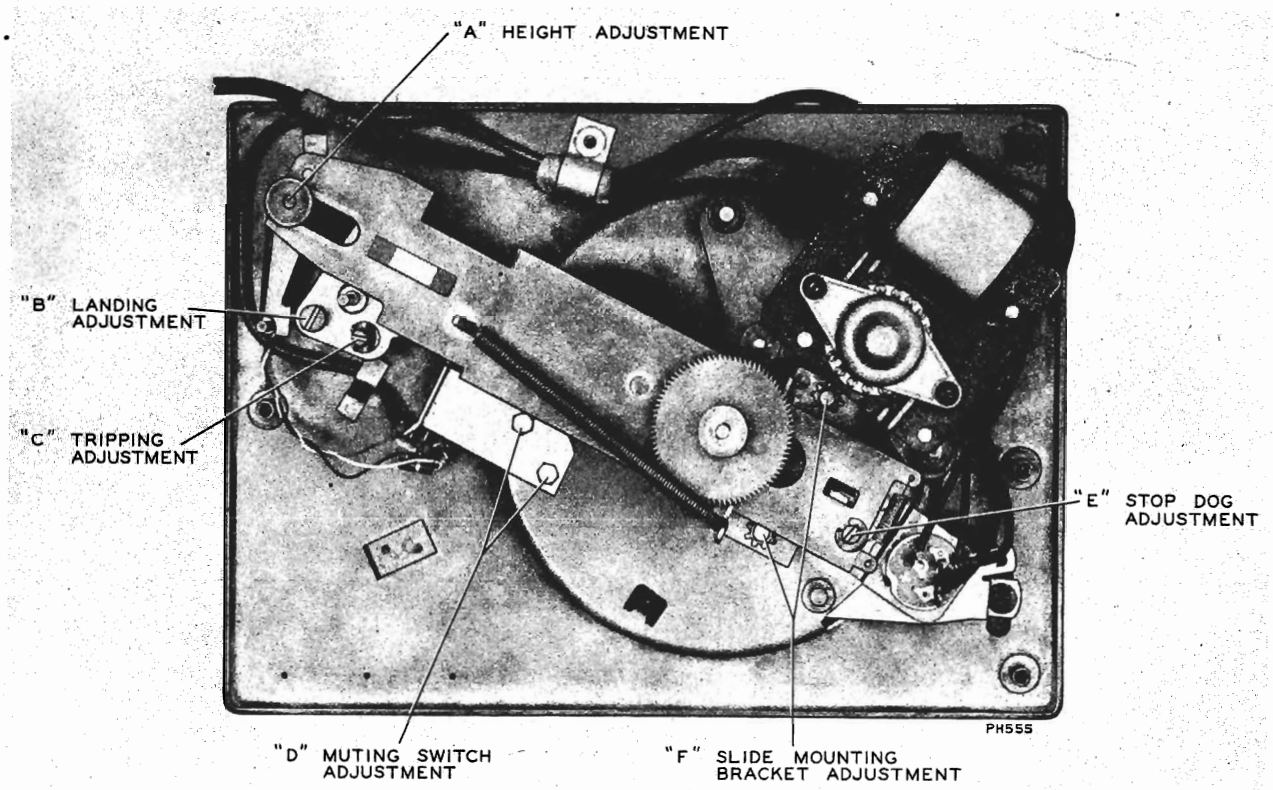

Fig. 38

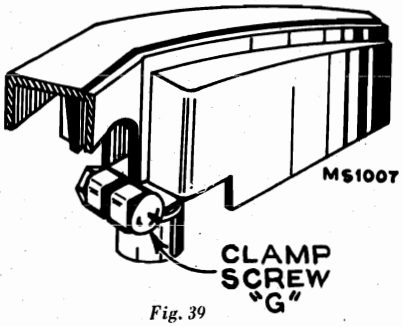

Fig. 39

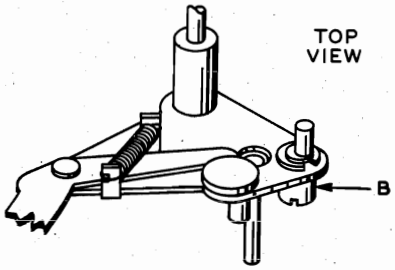

Fig. 40

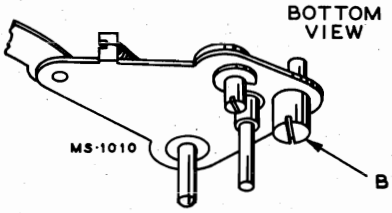

Fig. 41

Adjustments

Pickup Landing Adjustment:

Under ordinary conditions the landing adjustment is a screwdriver adjustment as shown. The adjustment of eccentric landing adjustment stud (B) gives approximately a ¼" movement. (See Figs. 38, 40, 41.)

If, however, the pickup arm has been removed it is first necessary to make an approximate landing adjustment as follows:

1. With the mechanism out of cycle and the clamp screw (G) loose, place pickup arm on the rest and tighten clamp screw enough to prevent the clamp from slipping on the shaft.
2. Set the landing adjustment stud (B) as shown (mid-adjustment). (See Figs. 40, 41.)
3. With the power removed, push reject control to reject. Rotate turntable by hand in the correct direction until the pickup is about ready to land. See sketch.
4. Loosen clamp screw (G) and move pickup arm so the stylus is approximately 2⅝" from side of centerpost. Tighten clamp screw. (See Figs. 36, 39.)
5. Exact landing adjustment can now be made by a screwdriver on stud (B). (See Fig. 38.)

Pickup Height Adjustment (See Fig. 38):

Adjust knurled nut (A) until the distance (during change cycle) between the top of the turntable and the stylus point is approximately 1⅛".

NOTE: If unable to adjust for sufficient height, it may be necessary to cut a few turns from the compression spring to allow more space on the shaft.

Tripping Adjustment (See Figs. 37, 38):

Adjust the eccentric tripping stud (C) until the mechanism trips when the stylus is 1 9/32" from the side of the centerpost.

Mounting Bracket Adjustment (See Fig. 38):

Loosen the two screws (F) and move the bracket so it is as near perpendicular to the slide as possible. Move back or forward until the cut away section of the cycling cam clears the knurled roller approximately 1/16". Tighten screws.

Muting Switch Adjustment (See Fig. 38):

Loosen the two screws (D) and adjust the position of the switch so the contacts are approximately 1/32 to 1/16 inches apart when the mechanism is out of cycle. If the mounting screws do not give sufficient adjustment, bend tab on slide slightly.

Stop Dog Adjustment (See Fig. 38):

Turn the eccentric screw (E) until the record drops to the turntable without striking the pickup arm.

©John F. Rider

Compliments of www.nucow.com

MODELS RP-190,
RP-190-1, RP-190-2

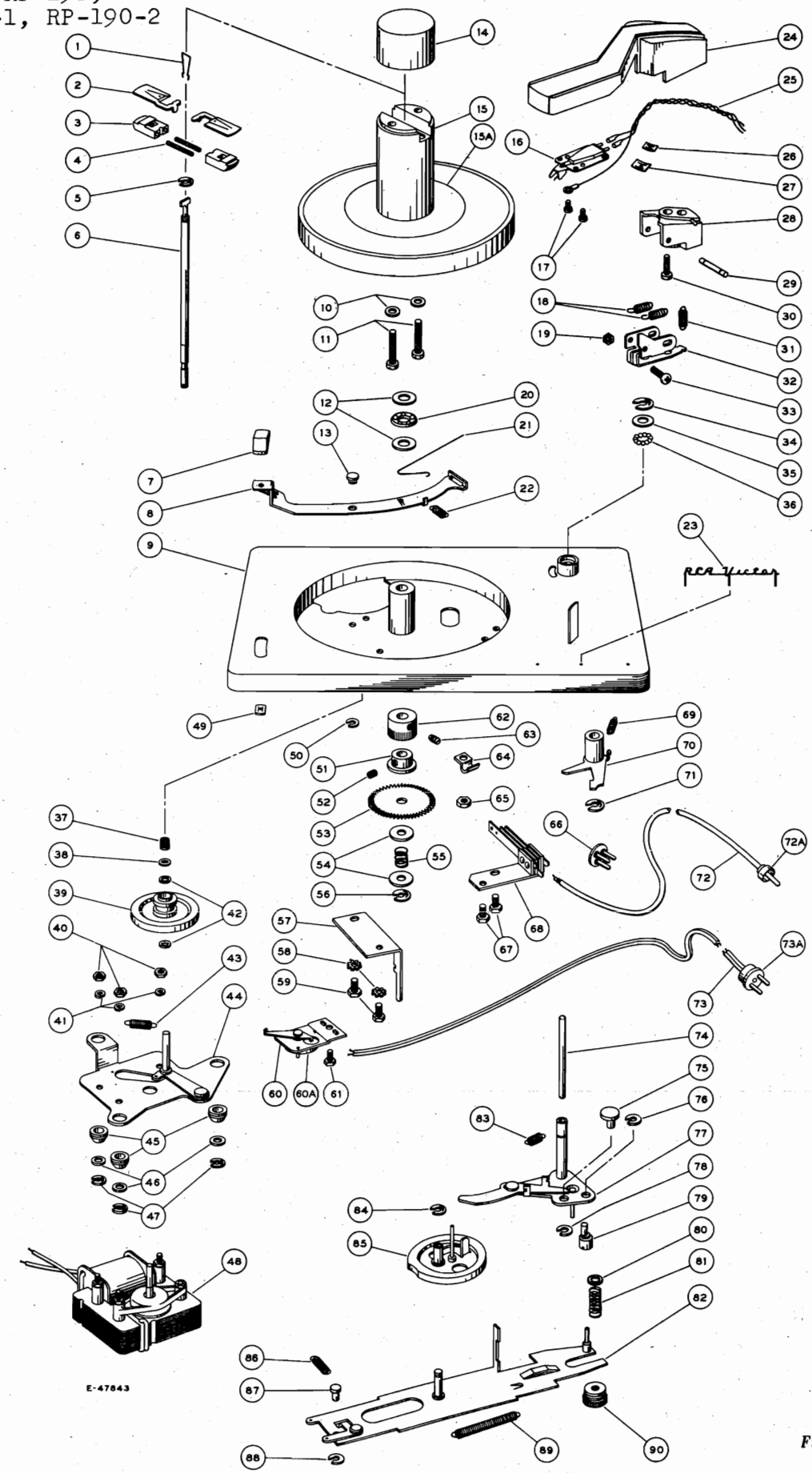

Fig. 42

©John F. Rider

Compliments of www.nucow.com

MODELS RP-190, RP-190-1, RP-190-2

STOCK No.	ILL. No.	DESCRIPTION RP190-1, RP190-2
74862	1	Spring—Spindle nose spring--formed
74864	2	Separator - Separator knife
74865	3	Shelf - Separator shelf
75756	4	Spring—Separator shelf return spring (.118" O.D. x 3/4" — 16 turns)
33726	5	Washer—"C" washer to hold separator shaft and cam
75757	6	Shaft--Separator shaft with cam
75741	7	Knob—Control knob
75739	8	Lever--Reject lever complete with formed spring
75729	9	Board--Motorboard sub-assembly complete with welded and/or staked studs and rest
74869	10	Washer - No. 6 flat washer for under head of screws No. 75758
75758	11	Screw--No. 6-32 x 1" fillister head machine screw (holds nose to spindle)
74080	12	Washer--Thrust bearing washer
75748	13	Stud--Reject lever mounting stud
75755	14	Cap—Spindle nose cap—red
75753	15	Turntable—Turntable and shaft assembly complete with finished disc
75754	15A	Disc—Finished disc for turntable part of No. 75753
75476	16	Crystal—Crystal cartridge complete with stylus (RP190-1)
75575	16	Crystal--Crystal cartridge complete with stylus (RP190-2)
74819	16A	Guard—Stylus guard for (RMP 128-4) (RP190-2)
74065	16B	Screw—No. 2-56 x 3/16" fillister head screw to mount guard (RMP 128-4) (RP190-2)
75770	16C	Stylus--Replacement stylus and holder assembly (yellow) for crystal (RMP 128-4) (RP-190-2)
74230	16D	Washer--Washer and nut to mount replacement stylus (RMP 128-4) (RP190-2)
75722	17	Screw--No. 4 x 1/4" fillister head screw to mount crystal
75727	18	Spring -Shock absorbing spring (.187" O.D. x 3/4")
75725	19	Nut - No. 8-32 hex nut to mount pickup arm
72349	20	Bearing - Thrust bearing
75740	21	Spring--Reject lever spring (formed), part of reject lever
75742	22	Spring Reject lever return spring (.180" O.D. x .535" -- 21 1/2 turns)
74782	23	Emblem "RCA Victor" emblem.
75719	24	Arm Pickup arm shell only
75728	25	Cable 3 wire twisted pickup arm cable complete with connectors
71095	26	Nut Speed nut for cable in rear of arm

STOCK No.	ILL. No.	DESCRIPTION
72765	27	Nut - Speed nut for cable in center of arm
75721	28	Weight - Counterbalance weight die cast
75724	29	Pin - Pin for anchoring shock absorbing springs
75723	30	Screw No. 6 x 11/16" fillister head screw to fasten counterbalance
75886	31	Spring-- Counterbalance spring (.180" O.D. x .600" -- 30 turns)
75720	32	Swivel - Pickup arm swivel
75726	33	Screw-- No. 8-32 x 5/8" cross recessed pan head machine screw to mount pickup arm
35969	34	Washer - "C" washer to mount trip lever
75752	35	Washer - Steel balls thrust washer
3658	36	Ball - Steel ball (3/32 dia.)
74870	37	Retainer--Idler wheel retainer (spring sleeve type)
75887	38	Washer- Spring washer for idler wheel
74077	39	Wheel - Idler wheel
——	40	Nut - No. 6-32 hex nut for mounting motor to idler lever plate assembly
——	41	Lockwasher No. 6 split lockwasher for No. 6-32 hex nut
74078	42	Washer - Dampening washer for idler wheel
75762	43	Spring - Idler wheel tension spring (.195" O.D. x 29/32" -- 37 1/2 turns)
75759	44	Plate--Motor mounting plate complete with idler lever
75761	45	Grommet--Rubber grommet for motor mounting plate
75749	46	Washer- Flat washer--metal (.0299" x .190" I.D. x 3/8" O.D.)—for mounting motor
33726	47	Washer—"C" washer to mount motor assembly
75760	48	Motor—117 volt, 60 cycle motor
74212	49	Nut - Control knob speed nut
74431	50	Washer—Spring washer to mount reject lever mounting stud
75736	51	Collar--Friction collar
14974	52	Screw- No. 8-32 x 3/16" hex socket head -- cup point - for friction collar
75738	53	Wheel—Ratchet wheel
75750	54	Washer--Flat washer--metal (.0299" x .180" I.D. x 9/16" O.D.)--for ratchet wheel, thrust spring
75743	55	Spring--Ratchet wheel thrust spring (5/16" O.D. x 7/16" -- 5 1/2 turns)
33726	56	Washer "C" washer to mount ratchet wheel
75735	57	Bracket - Mounting bracket for slide assembly
—	58	Lockwasher No. 8 external teeth lockwasher for cycling slide mounting bracket
74670	59	Screw--No. 8 x 3/8" self-tapping hex head screw to mount slide assembly bracket
75732	60	Housing "On-Off" switch housing and lever less switch

STOCK No.	ILL. No.	DESCRIPTION
75733	60A	Switch—"On-Off" switch
——	61	Screw—No. 8 x 1/4" self-tapping hex head screw to mount "On-Off" switch
75737	62	Roller—Knurled roller
75751	63	Screw—No. 10-32 x 17/64" headless set screw—dog point—for knurled roller
——	64	Clamp—Cable clamp for audio cable
——	65	Nut—No. 8-32 hex nut to fasten cable clamp ILL. 64
74192	66	Connector—3 contact male connector for audio cable
——	67	Same as 61
75730	68	Switch—Muting switch
75745	69	Spring—Pickup arm return lever spring (.195" O.D. x 1 1/4" — 66 turns)
75734	70	Lever—Return lever
35969	71	Washer—"C" washer to mount return lever
——	72	Cable—Shielded audio cable (see Service Data for various instruments)
31048	72A	Plug—Pin plug for audio cable
——	73	Power cord (see Service Data for various instruments)
30870	73A	Connector—2 contact male connector for power cable
75731	74	Rod—Elevating rod
75768	75	Stud—Tripping adjustment stud
74431	76	Washer—Spring washer for adjusting studs
75767	77	Lever—Trip lever assembly less spring and tripping and landing adjustment studs
74431	78	Washer—Spring washer for adjusting studs
75769	79	Stud—Landing adjustment stud
75749	80	Washer—Flat washer- metal (.0299" x .190" I.D. x 3/8" O.D.)—to mount sub-motorboard
75746	81	Spring—Height adjustment spring (.262" O.D. x 13/16" -- 8 turns)
75763	82	Slide- Cycling slide assembly complete with stop dog less cam wheel and stop dog adjusting stud
75742	83	Spring- Trip lever spring (.180" O.D. x .535" -- 21 1/2 turns)
33726	84	Washer "C" washer for cam wheel
75764	85	Wheel Cam wheel and tire
75765	86	Spring Stop dog tension spring (.195" O.D. x 11/16" 24 1/2 turns)
75766	87	Stud Adjusting stud for stop dog
74431	88	Washer Spring washer for stop dog adjusting stud
75744	89	Spring Slide assembly return spring (1/4 O.D. x 2 23/32" 90 turns)
75747	90	Nut Knurled nut for height adjustment

©John F. Rider

Compliments of www.nucow.com

MODEL 45-EY

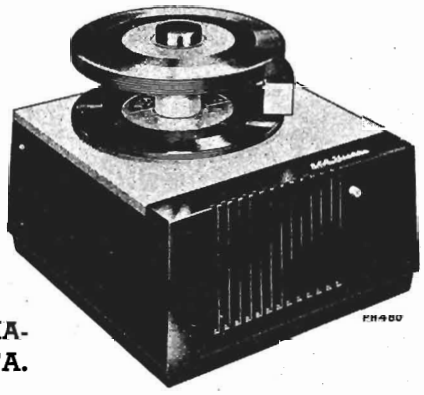

FOR RECORD CHANGER SERVICE INFORMATION—REFER TO RP-168 SERIES SERVICE DATA.
ON PAGES RCD.CH.19-1 THROUGH RCD.CH.19-8.

Specifications

Tube Complement

1. RCA 12AV6 ..... Amplifier
2. RCA 50C5 (in RS-132 or RS-132-A) ..... Output
   RCA 50B5 (in RS-132-F) ..... Output
3. RCA 35W4 ..... Rectifier

Loudspeaker (92577-6W)

Size and type ..... 4 in. P.M.
Voice coil impedance ..... 3.2 ohms at 400 cycles

Dimensions (overall)

Height, 7⅝" Width, 9$\frac{11}{16}$" Depth, 9⅝"

Power Supply Rating

115 volts, 60 cycles A.C. ..... 40 watts

Power Output

Undistorted ..... 1.0 watt Maximum ..... 1.25 watts

Record Changer

Turntable speed ..... 45 r.p.m.
Records used ..... RCA 7 in. fine groove
Record capacity ..... up to 10 records
Pickup ..... Crystal (medium output)
Pickup Stock No. 74067 used with RS-132 or RS-132-F
Pickup Stock No. 74625 used with RS-132-A

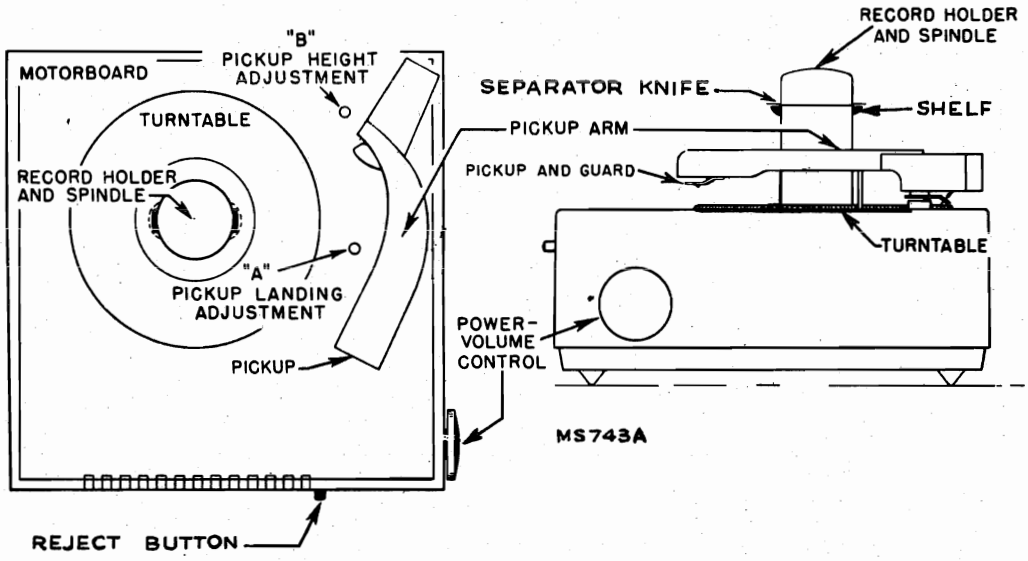

Pickup Landing Adjustment "A"

The pickup point should land half-way between the outer edge of the record and the first music groove.

If the pickup lands inside the starting grooves—turn screw "A" slightly clockwise. If pickup lands outside the starting grooves—turn screw "A" slightly counterclockwise.

Pickup Height Adjustment "B"

During cycle the pickup arm must rise high enough to clear a stack of ten records on the turntable, but not high enough to cause the top of the arm to touch records resting on the record supports.

If pickup does not clear a stack of ten records—turn screw "B" slightly clockwise. If pickup arm touches records on record supports—turn screw "B" slightly counterclockwise.

Record Separators

During service, the position of the star wheel on the underside of the record changer may be accidentally shifted; this may cause the separator knives to be extended when they should be concealed.

If the separator knives are thus extended—turn the power on so that the turntable is revolving, push the "start-reject" knob and allow the mechanism to complete a change cycle. If the knives remain extended—while the turntable is still revolving, gently press fingers against the extended knives until they disappear inside the center post—DO THIS ONLY WHILE MECHANISM IS OUT OF CYCLE.

©John F. Rider

Compliments of www.nucow.com

MODEL 45-EY

To Remove Chassis

Remove the four screws at the corners of the bottom cover, separate the motor power plug and socket and remove the pickup cable from its socket on the amplifier chassis.

Elongated holes permit the speaker position to be adjusted. If the speaker should be replaced or its mounting bracket loosened, the speaker mounting bracket screws should not be tightened until after the bottom cover is assembled to the cabinet.

Amplifier Chassis

Three different amplifier chassis have been used in Model 45-EY.

Chassis No. RS-132 and RS-132-A use a 50C5 output tube. Chassis No. RS-132-F uses a 50B5 output tube.

Crystal pickup Stock No. 74067 is used in instruments having chassis RS-132 or RS-132-F. Crystal pickup Stock No. 74625 is used in instruments having chassis RS-132-A.

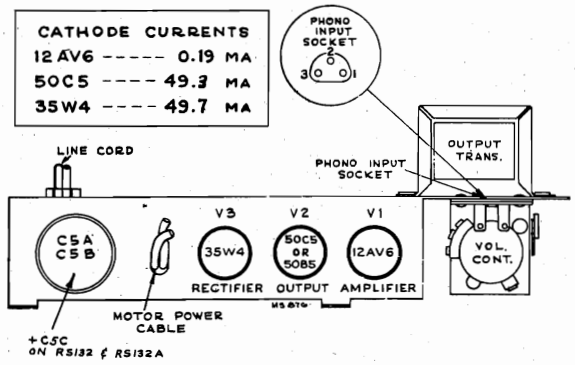

REPLACEMENT PARTS (For instruments having amp. chassis marked RS-132)

STOCK No.	DESCRIPTION
	AMPLIFIER ASSEMBLIES RS-132
39648	Capacitor—Mica, 680 mmf. (C1)
73920	Capacitor—Moulded paper, .0047 mfd., 400 volts (C4)
73961	Capacitor—Tubular, .003 mfd., 200 volts (C2)
71923	Capacitor—Tubular, .01 mfd., 200 volts (C3)
58476	Capacitor—Moulded paper, .018 mfd., 400 volts (C6)
73553	Capacitor—Moulded paper, .047 mfd., 400 volts (C7, C8)
72281	Capacitor—Electrolytic, comprising 1 section of 80 mfd., 150 volts; 1 section of 40 mfd., 150 volts; and 1 section of 20 mfd., 25 volts (C5A, C5B, C5C)
74133	Control—Volume control and power switch (R3, S1)
28451	Cover—Insulating cover for electrolytic capacitor
73693	Grommet—Strain relief grommet (1 set) for power cord
70391	Insulator—Phono input socket insulator
30868	Plug—2 contact female plug for motor cable
73237	Resistor—Wire wound, 33 ohms, 150 ma. (R11)
72314	Resistor—Wire wound, 120 ohms, 5 watts (R7)
	Resistor—Fixed, composition, 150 ohms ±10%, ½ watt (R9)
	Resistor—Fixed, composition, 2700 ohms ± 10%, ½ watt (R10)
	Resistor—Fixed, composition, 120,000 ohms ±10%, ½ watt (R4)
	Resistor—Fixed, composition, 180,000 ohms ±10%, ½ watt (R2)
	Resistor—Fixed, composition, 270,000 ohms ±10%, ½ watt (R6, R8)
	Resistor—Fixed, composition, 470,000 ohms ±10%, ½ watt (R1)
	Resistor—Fixed, composition, 4.7 megohms ±20%, ½ watt (R5)

STOCK No.	DESCRIPTION
73117	Socket—Tube socket
36422	Socket—3 contact socket for phono input cable
72535	Transformer—Output transformer (T1)
	SPEAKER ASSEMBLIES 92577-6W—RL 108B4
74165	Speaker—4" P.M. speaker complete with cone and voice coil
	MISCELLANEOUS
74135	Baffle—Speaker baffle
74793	Bottom—Cabinet bottom cover
74137	Bracket—Mounting bracket for reject button and shaft
74136	Bracket—Speaker mounting bracket
74138	Button—Reject button and shaft
Y2226	Cabinet—Plastic cabinet less bottom cover
74190	Cable—Shielded pickup cable complete with 3 prong male plug
74193	Clamp—Spring clamp for reject button and shaft
74782	Emblem—"RCA Victor" emblem
74623	Hardware—Set of mounting parts consisting of 3 flat washers, 3 spacers and 3 rubber grommets to mount record changer
74666	Knob—Power switch knob
74192	Plug—3 prong male plug for pickup cable
74734	Spring—Retaining spring for knob
74139	Spring—Reject button and shaft return spring (.203" dia. x 1½"—21" turns)
2917	Washer—"C" washer for reject button and shaft

NOTE: Some amplifiers may have a .022 mfd. capacitor in place of .018 (C6)

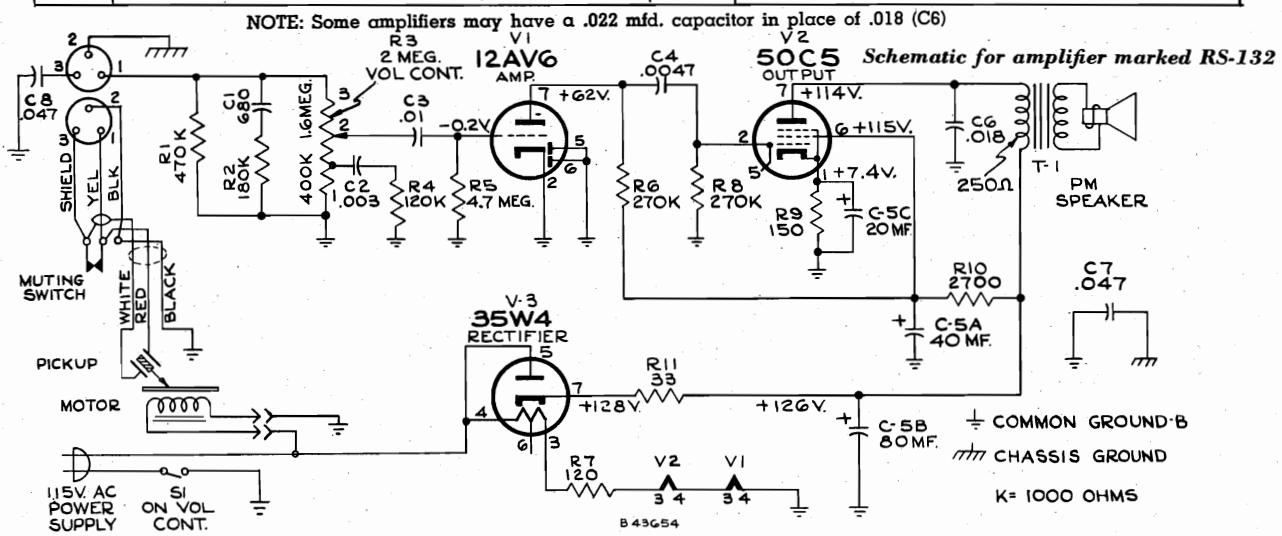

VOLTAGES MEASURED TO COMMON WIRING WITH "VOLTOHMYST" SHOULD HOLD WITHIN ± 20%

©John F. Rider

Compliments of www.nucow.com

MODEL 45-EY

REPLACEMENT PARTS (For instruments having amp. chassis marked RS-132-A)

STOCK No.	DESCRIPTION
	AMPLIFIER ASSEMBLIES RS-132-A
72281	Capacitor—Electrolytic comprising 1 section of 80 mfd., 150 volts; 1 section of 40 mfd., 150 volts; and 1 section of 20 mfd., 25 volts
71934	Capacitor—Tubular, paper, .0015 mfd., 600 volts (C1)
73920	Capacitor—Tubular, paper, oil impregnated, .0047 mfd., 600 volts (C4)
71923	Capacitor—Tubular, paper, .01 mfd., 200 volts (C2, C3)
73797	Capacitor—Tubular, paper, .015 mfd., 600 volts (C6)
73553	Capacitor—Tubular, paper, oil impregnated, .047 mfd., 400 volts (C7, C8)
30868	Connector—2 contact female connector for motor cable
36422	Connector—3 contact female connector for phono cable
38411	Control—Volume control and power switch
28451	Cover—Insulating cover for electrolytic
73693	Grommet—Power cord strain relief grommet
28452	Plate—Mounting plate for electrolytic
73237	Resistor—Fuse type, 33 ohms (R11)
72314	Resistor—Wire wound, 120 ohms, 5 watts (R7)
	Resistor—Fixed, composition:—
	150 ohms, ±10%, ½ watt (R9)
	2700 ohms, ±10%, ½ watt (R10)
	27,000 ohms, ±10%, ½ watt (R4)
	180,000 ohms, ±10%, ½ watt (R2)
	270,000 ohms, ±10%, ½ watt (R6, R8)
	4.7 megohm, ±20%, ½ watt (R5)
73117	Socket—Tube socket
72535	Transformer—Output transformer

STOCK No.	DESCRIPTION
	SPEAKER ASSEMBLIES 92577-6W
74165	Speaker—4" P.M. speaker complete with cone and voice coil
	MISCELLANEOUS
74135	Baffle—Speaker baffle
74793	Bottom—Cabinet bottom cover
74136	Bracket—Speaker mounting bracket
74137	Bracket—Mounting bracket for reject button and shaft
74138	Button—Reject button and shaft
Y2226	Cabinet—Plastic cabinet less bottom cover
74190	Cable—Shielded pickup cable complete with 3 contact male plug
74193	Clamp—Spring clamp for reject button and shaft
74192	Connector—3 contact male connector for pickup cable
74782	Emblem—"RCA Victor" emblem
74623	Hardware—Set of mounting parts consisting of 3 flat washers, 3 eyelets and 3 rubber grommets to mount changer
74666	Knob—Power switch knob
74734	Spring—Retaining spring for knob
74139	Spring—Reject button and shaft return spring
2917	Washer—"C" washer for reject button and shaft

APPLY TO YOUR RCA DISTRIBUTOR FOR PRICES OF REPLACEMENT PARTS

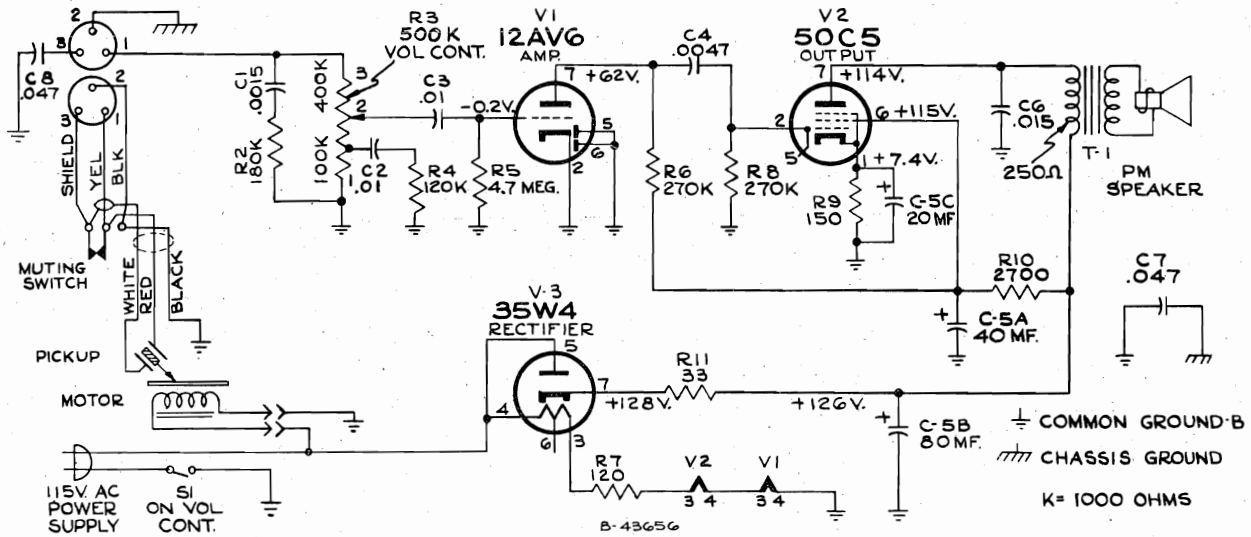

VOLTAGES MEASURED TO COMMON WIRING WITH "VOLTOHMYST" SHOULD HOLD WITHIN ± 20%

Schematic for amplifier marked RS-132A

©John F. Rider

Compliments of www.nucow.com

MODEL 45-EY

REPLACEMENT PARTS (For instruments having amp. chassis marked RS-132-F)

STOCK No.	DESCRIPTION
	AMPLIFIER ASSEMBLIES RS-132-F
73520	Capacitor—Electrolytic comprising 1 section of 80 mfd., 150 volts and 1 section of 50 mfd., 150 volts (C5A, C5B)
73920	Capacitor—Tubular, paper, oil impregnated, .0047 mfd., 600 volts (C4)
71923	Capacitor—Tubular, paper, .01 mfd., 200 volts (C3)
58476	Capacitor—Tubular, paper, oil impregnated, .018 mfd., 400 volts (C6)
73551	Capacitor—Tubular, paper, oil impregnated, 0.1 mfd., 400 volts (C7)
36422	Connector—3 contact female connector for phono cable (J1)
30868	Connector—2 contact female connector for motor cable (J2)
74101	Control—Volume control and power switch (R3, S1)
73127	Cover—Insulating cover for electrolytic
73693	Grommet—Power cord strain relief grommet (1 set)
28451	Plate—Mounting plate for electrolytic
73237	Resistor—Fuse type, 33 ohms (R11)
72314	Resistor—Wire wound, 120 ohms, 5 watts (R7)
	Resistor—Fixed, composition:—
	150 ohms, ±10%, ½ watt (R9)
	2700 ohms, ±10%, ½ watt (R10)
	270,000 ohms, ±10%, ½ watt (R6, R8)
	4.7 megohm, ±20%, ½ watt (R5)
73117	Socket—Tube socket
72535	Transformer—Output transformer (T1)

STOCK No.	DESCRIPTION
	SPEAKER ASSEMBLIES 92577-6W
74165	Speaker—4" P.M. speaker complete with cone and voice coil
	MISCELLANEOUS
74135	Baffle—Speaker baffle
74793	Bottom—Cabinet bottom cover
74136	Bracket—Speaker mounting bracket
74137	Bracket—Mounting bracket for reject button and shaft
74138	Button—Reject button and shaft
Y2226	Cabinet—Plastic cabinet less bottom cover
74193	Clamp—Spring clamp for reject button and shaft
74192	Connector—3 contact male connector for pickup cable
74782	Emblem—"RCA Victor" emblem
74623	Hardware—Set of mounting parts consisting of 3 flat washers, 3 eyelets and 3 rubber grommets to mount changer
74666	Knob—Volume control and power switch knob
74734	Spring—Retaining spring for knob
74139	Spring—Reject button and shaft return spring
2917	Washer—"C" washer for reject button and shaft

APPLY TO YOUR RCA DISTRIBUTOR FOR PRICES OF REPLACEMENT PARTS

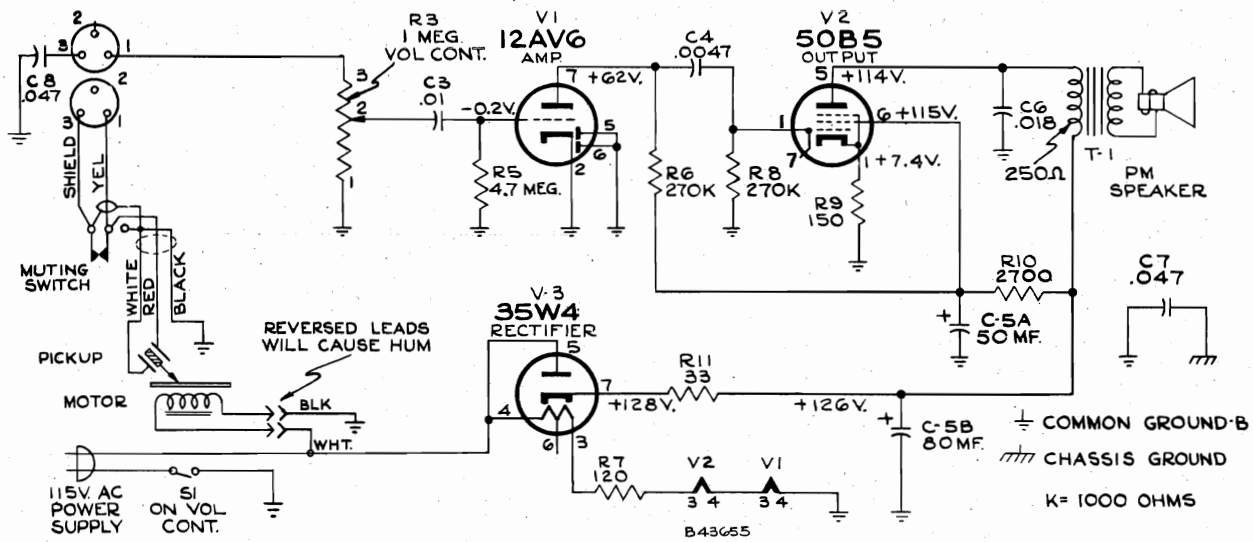

VOLTAGES MEASURED TO COMMON WIRING WITH "VOLTOHMYST" SHOULD HOLD WITHIN ± 20%.

Schematic for amplifier marked RS-132F

©John F. Rider

Compliments of www.nucow.com

MODEL 45J

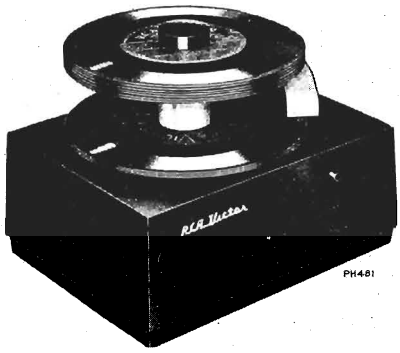

Specifications

Record Changer (RP-168)

Turntable speed ..... 45 r.p.m.
Records used ..... RCA fine groove—7 in.
Record capacity ..... Up to 10 records
Pickup RMP-128-1—Stock No. 74067.. Crystal (medium output)

Power Supply Rating

115 volts, 60 cycles A.C. ..... 15 watts

Dimensions (overall)

Height 6⅝" Width 9⅛" Depth 6⅞"

Record Separator

In the out of cycle position the record separator knives or discs are normally concealed inside the center post. During service, the position of the star wheel on the underside of the record changer may be accidentally shifted; this may cause the separator knives to be extended when they should be concealed.

If the separator knives are thus extended—turn the power on so that the turntable is revolving, gently press fingers against the extended knives until they disappear inside the center post—**DO THIS ONLY WHILE MECHANISM IS OUT OF CYCLE.**

Note: This holds true only to mechanisms having the circular, rotating knives.

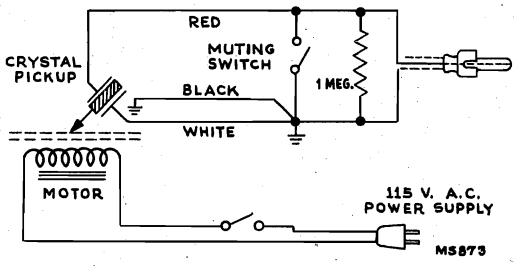

Schematic Diagram

Record Changer Mounting

The cabinet is used as the motorboard of the record changer. The record changer is attached with three screws and bushings. THE PICKUP ARM MUST BE REMOVED BEFORE THE RECORD CHANGER CAN BE REMOVED—REFER TO RP-168 SERIES SERVICE DATA.

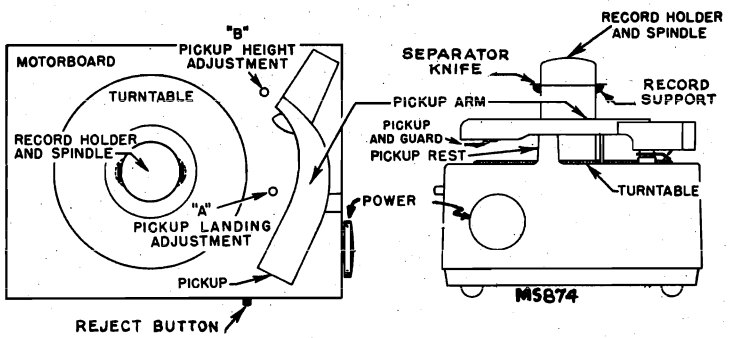

Top and Side Views

FOR RECORD CHANGER SERVICE INFORMATION—REFER TO RP-168 SERIES SERVICE DATA. ON PAGES RCD.CH.19-1 THROUGH RCD.CH.19-8.

Pickup Landing Adjustment "A"

The pickup point should land half-way between the outer edge of the record and the first music groove.

If the pickup lands inside the starting grooves—turn screw "A" slightly clockwise. If pickup lands outside the starting grooves—turn screw "A" slightly counterclockwise.

Pickup Height Adjustment "B"

During cycle the pickup arm must rise high enough to clear a stack of eight records on the turntable, but not high enough to cause the top of the arm to touch records resting on the record supports.

If pickup does not clear a stack of eight records—turn screw "B" slightly clockwise. If pickup arm touches records on record supports—turn screw "B" slightly counterclockwise.

REPLACEMENT PARTS

STOCK No.	DESCRIPTION
	MISCELLANEOUS
74097	Bottom—Cabinet bottom cover
74189	Bushing—Shoulder bushing to mount mechanism in cabinet (3 required)
74098	Button—Reject button
Y2151	Cabinet—Plastic cabinet less bottom cover
74296	Cable—Shielded pickup cable complete with pin plug
74674	Emblem—"RCA Victor" emblem
31051	Foot—Rubber foot (4 required)
73490	Knob—Power switch knob
——	Resistor—Fixed, composition: 1 megohm, ±10%, ½ watt
14270	Spring—Retaining spring for knob
74871	Switch—Power switch

APPLY TO YOUR RCA DISTRIBUTOR FOR PRICES OF REPLACEMENT PARTS.

©John F. Rider

Compliments of www.nucow.com

MODEL 45J

Connecting Record Changer Attachment to Radio Receivers

RCA Radios with Phono Jack

Plug male connector on the end of the "Phono" lead into the female connector on the receiver chassis. If set is provided with a phono switch, push or turn the "Phono" switch to "Phono" position, and operate the Record Changer Attachment according to instructions. If no switch is provided, use maximum setting of volume control on attachment, and minimum setting of radio volume control which will give acceptable volume, and tune receiver off frequency from any very strong station. In some instances the radio volume control will have the effect of a tone control.

RCA Type No. 202W1 Record Player Selector

This selector switch may be used for combined operation of two record players through one phono input jack. A choice of two types of input jacks and output cable plugs are provided.

Radio-Phonograph Combinations

Most radio-phonograph combinations use resistors and/or capacitors for tone compensation in the phono input circuit.

Where unsatisfactory reproduction is obtained with Model 45J connected into the phono jack of such instruments, we suggest that Model 45J be connected as indicated for radios which do not have a phono jack.

Radios Without Phono Jack

Methods of connecting the Record Changer Attachment to various types of audio systems are given in the accompanying text and illustrations. The data given requires that an RCA Type No. 240X1 (Formerly Stock No. 240) Radio-Phono switch be used for switching from radio to phonograph, as desired. For ease in connecting the "phono" lead to the switch, the male plug on the end of the lead matches the phono jack on the switch.

In general, the Record Changer Attachment must be used with radio receivers having at least two stages of high-gain audio amplification. The output of the Record Changer Attachment should be connected to the input of the first audio tube, and at the same time the output of the radio receiver portion of the chassis should be shorted or opened, to prevent radio signals being heard while the Record Changer Attachment is in operation.

Installation of Switch

Fasten the bracket to the cabinet in such a position that the switch may be easily reached. For wooden cabinets, a suggested place is the upper rear edge of the cabinet. If the radio has a plastic cabinet, the bracket may be fastened to the chassis by self-tapping screws or soldering. **In the case of a.c.-d.c sets, the bracket should not be fastened to the chassis.** In such cases, a wooden block may be fastened to the chassis and the bracket screwed to the wooden block, care being exercised that there is no metallic path from the bracket to the chassis.

Connect the braided shield extension to the radio chassis by either soldering or placing the spade lug under a mounting screw.

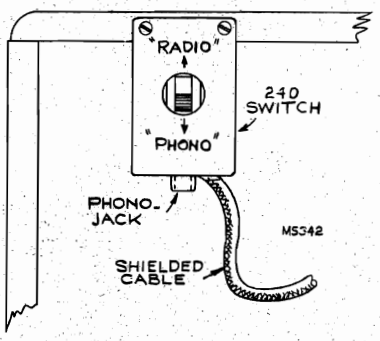

On a.c.-d.c. sets it is necessary to isolate the cable shield from the chassis. This is best done by connecting the shield to the chassis through a .25 mfd. 300-volt condenser. Care should be taken that the shield braiding and switch bracket do not come in contact with the chassis.

If the common-negative wiring in the a.c.-d.c. set is isolated from the set chassis, connect the cable shield, through a .25 mfd. capacitor, to the common-negative wiring, and not to the chassis.

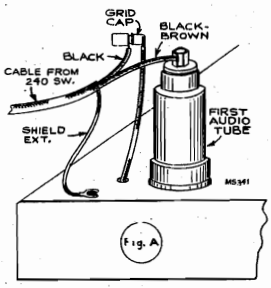

Fig. A

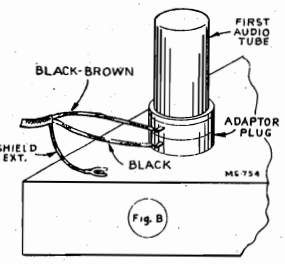

Fig. B

Note:

If late production models are connected to a radio set as shown in Fig. A & B, it will probably be necessary to substitute a volume control in place of the 1 meg. fixed resistor, since majority of sets do not have a volume control following the first audio tube.

For radio receivers in which the 1st-audio tube has a top grid cap—see Fig. A:

1. Disconnect the grid lead from the first audio tube.
2. Connect the cap on the black lead to the clip on the grid lead, as shown above.
3. Connect the clip on the black-brown lead to the grid cap at the top of the 1st-audio tube, bending the terminal if necessary to proper size for a metal tube cap.
4. Insert the plug on the end of the record player lead into the jack on the bracket.
5. Secure or position the connection cable assembly so that the cap and clip terminals are well separated from each other and other metal parts.

For radio receivers in which the 1st-audio tube is type 6SQ7, 6SR7, 12SQ7 or 12SR7—see Fig. B:

1. Use adaptor plug RCA Stock No. 37798.
2. Remove the 1st-audio tube.
3. Solder the switch leads to the adaptor plug terminals—black to bottom lug—black-brown to top lug.
4. Tape terminals to prevent short circuits when installed in set.
5. Insert the adaptor into the 1st-audio tube socket.
6. Insert the 1st-audio tube into the adaptor.
7. Insert the plug on the end of the record player lead into the jack on the bracket.

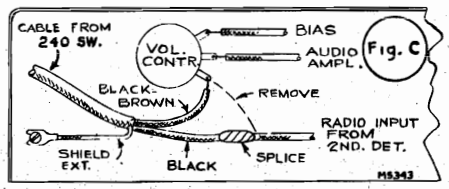

Fig. C

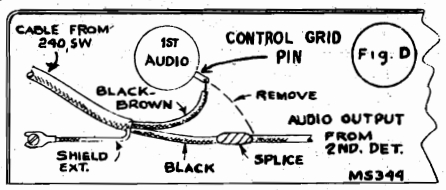

Fig. D

For other radio receivers in which the 1st-audio tube does not have a grid cap; connection to volume control input—see Fig. C, connection to 1st-audio tube control grid—see Fig. D:

1. Unsolder the lead from the volume control lug indicated in Fig. C or from the control grid pin indicated in Fig. D. It is usually necessary to remove the chassis from the cabinet to do this.
2. Solder the black-brown lead (remove clip) to the lug or pin disconnected in Step 1.
3. Solder the black lead (remove plug) to the lead disconnected in Step 1. Tape the joint to prevent short circuits.
4. Insert the plug on the end of the record player lead into the jack on the bracket.

©John F. Rider

Compliments of www.nucow.com

MODELS 960282-1, 960282-2, 960282-3, 960282-4, 960282-5

PH482

IDENTIFICATION OF MODELS

Each record changer bears a label on the underside of the motorboard in accordance with the following:

960282-1

60 cycle version used in domestic instruments. Has Stock No. 75044 crystal pickup. Used in Models A55, A78, TA128 and TA129.

960282-2

50/60 cycle version used in instruments designed for export sale. Has Stock No. S-5652 ceramic pickup. Used in Models 9QV5 and 4QV8C.

960282-3

50/60 cycle version used in instruments designed for export sale. Has Stock No. 75044 crystal pickup. Used in early production of Model 9QV5.

960282-4

60 cycle version used in domestic instruments. Has Stock No. 75475 crystal pickup. Used in Models A82, 2T81 and 6T84 (mahogany and walnut).

960282-5

Identical to 960282-4 except for tan finish. Used in Models A82, 2T81 and 6T84 (blonde and limed oak).

Compensation:

Some of the above record changers have a resistor/capacitor combination on the pickup lead terminal board. This is to compensate for the differing frequency response of various instruments. Correct values of these resistors and capacitors are indicated in the Service Data for the instruments which use the record changer.

AUTOMATIC OPERATION

1. Lift the record stabilizing clamp.
2. Place a stack of records, ten inch if desired, over the center post leaving the edge of the stack resting on the ten-inch support.
   When playing a stack of twelve-inch records, raise both the stabilizing clamp and the ten-inch record support before placing the stack over the center post. The twelve inch records will rest on the main support.
3. Lower the stabilizing clamp on the stack of records.
4. Turn the speed selector control for the proper speed.
5. Select the proper stylus by turning the knob at the front end of the pickup arm.

NOTE: The speed selector and the stylus selector controls must indicate the same when selecting for a certain type of record.

6. Turn the control knob in the right hand end of the motorboard to "reject" and release.
   The mechanism will play one side of each record in the stack automatically. It will continue to repeat the last record of the stack until the pickup is raised from the record and placed on the rest.
7. To reject a record being played, turn the control knob to reject and release.
8. To remove records, place pickup arm on the rest, turn control knob to "off," raise stabilizing clamp and lift the entire stack.

NOTE: The pickup arm should only be handled when the control is in the manual position or before the pickup has played approximately ⅓ the distance in, if playing automatically. The pickup arm can also be handled when the mechanism is stopped if it feels free to move.

FEATURES

1. This record changer is a center support, drop type, two speed (78-33⅓ rpm) mechanism, designed to play automatically a series of twelve ten-inch, or ten twelve inch records of the standard 78 rpm type or of the long playing 33⅓ rpm type.
2. The mechanism is equipped with a light weight, dual stylus pickup cartridge.
3. The automatic tripping device is of the acceleration type.
4. The two speeds of 78 or 33⅓ rpm are controlled by a single knob.
5. The stylus selection is accomplished by a single knob.

MANUAL OPERATION

1. Raise both the stabilizing clamps and the ten-inch support shelf.
2. Place either a ten or twelve inch record on turntable.
3. Select the proper speed and stylus.
4. Turn control knob to manual.
5. Place pickup on start of the record.
6. When selection is completed, lift pickup arm and place it on the rest.
7. Turn control knob to "off".
8. Lift record straight up to remove.

HELPFUL SUGGESTIONS

Before servicing the mechanism, inspect the assembly to determine whether all levers, springs and parts are in place and not jammed or bent.

1. Never use force to start or stop the turntable or any part of the mechanism.
2. (a) If for any reason the mechanism becomes jammed, it may be released by pulling both the spiral engagement stud and the cycling carriage return stud downward. Then move the cycling carriage in a clockwise direction (viewed from the bottom).
   (b) If the two studs cannot be pulled down, try to remove the turntable by lifting straight up.
3. Cracked or badly chipped records may damage the stylus.
4. Do not leave records on the mechanism for an extended period of time as a guard against warpage.

©John F. Rider

Compliments of www.nucow.com

MODELS 960282-1, 960282-2, 960282-3, 960282-4, 960282-5

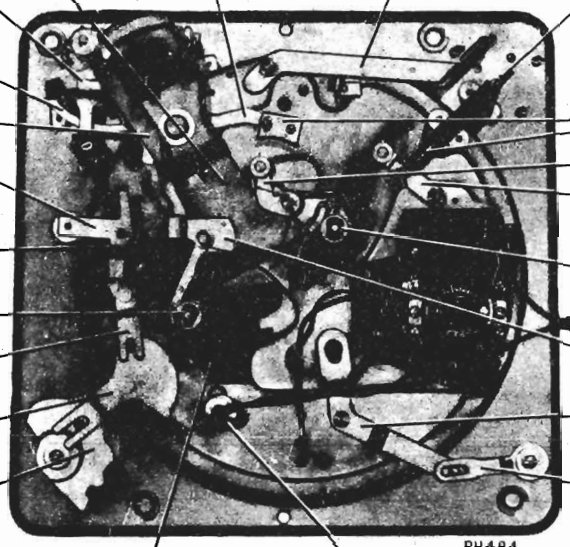

FUNCTIONS OF PRINCIPAL LEVERS

Push-off slide actuating lever 30

The actuating lever located inside the support post extends through the motorboard. The function is to transfer the movement of the push rod 51 to the 10 and 12 inch push-off slides.

Push-off slides 5, 10

The function of the slide is to push the records off the step in the center post.

Cycling Carriage 69

The cycling carriage forms the main tie link between the various levers. When the mechanism is tripped the cycling carriage engagement stud 42 raises and engages the cycling spiral channel located on the underside of the turntable. This engagement causes the cycling carriage to rotate about its pivot in a counterclockwise direction (Viewed from the bottom). The movement of the carriage continues in the same direction until the inclined portion of the spiral channel pushes the stud down to engage the latch (89). The next instant the cycling carriage return stud (40) becomes unlatched after which it raises and engages the spiral channel which returns the cycling carriage to the normal out of cycle position.

Cycling Carriage engagement Stud 42

The engagement stud forms a link between the cycling carriage and the cycling spiral on the under side of the turntable. This stud causes the cycling carriage to rotate in a counterclockwise direction (viewed from the bottom of the motorboard).

Cycling Carriage Return Stud 40

The return stud forms a link between the cycling carriage and the cycling spiral. This causes the cycling carriage to return to the normal out of cycle position.

Push Rod 51

The push rod forms a link between the push rod actuating lever (55) and the push off slide actuating lever (30).

Elevating Rod 19

The elevating rod functions as a lift for the pickup arm.

Push rod actuating lever 55

Push rod actuating lever is a tie link between the push rod (51) and the cycling carriage (69). It also is provided with an adjustment to govern the travel of the push-off slides 5 and 10.

Friction stabilizing spring 88

This spring forms a wedge which holds the cycling carriage (69) from drifting when the mechanism is in the playing position. In its braking action it provides a means of slowing the movement of the pickup to provide a gentle landing.

Trip lever (upper) 34

As the pickup arm travels towards the center of the record, the trip lever is carried along by the inter-connecting levers. A small offset located on the turntable shaft rotating with the turntable contacts the end of the trip lever once with each revolution. On each contact the trip lever is pushed back slightly. This slight backward movement continues as long as the pickup is moving at a constant rate of speed. When the pickup enters the eccentric groove of the record, the movement is accelerated and thus allows the trip dog (34A) to drop off the edge of the trip latch (89) before the turntable has made a revolution, therefore, the small offset on the turntable strikes the trip lever and in so doing, moves trip latch (89) and starts change cycle.

Trip Lever (lower) 78

The lower trip lever mechanically linked to the upper trip lever (34) transfers the action from the underside of the motorboard to the top of the motorboard.

Pickup Arm Landing Change Lever 59

The pickup arm landing change lever functions as a stop for the pickup indexing lever (62). The change lever position is altered depending upon the position of the 10 inch record support 4.

Pickup Arm Indexing Lever 62

The pickup arm lever engages one of the notches in the indexing lever and in so doing determines the landing position of the pickup.

Pickup arm lever 65

The pickup arm lever is connected to the pickup arm through the pickup arm pivot (20). The inward motion of the pickup arm causes the tripping action as a result of the contact between the pickup arm lever and the lower trip lever.

Pickup Arm Stabilizing Lever 61

The pickup arm stabilizing lever is actuated by a small tab on the cycling carriage during the change cycle. The forward movement of this stabilizing lever permits contact with the stud (65A) on the pickup arm lever, thereby stabilizing the pickup arm during the change cycle of the mechanism.

©John F. Rider

Compliments of www.nucow.com

MODELS 960282-1, 960282-2,
960282-3, 960282-4, 960282-5

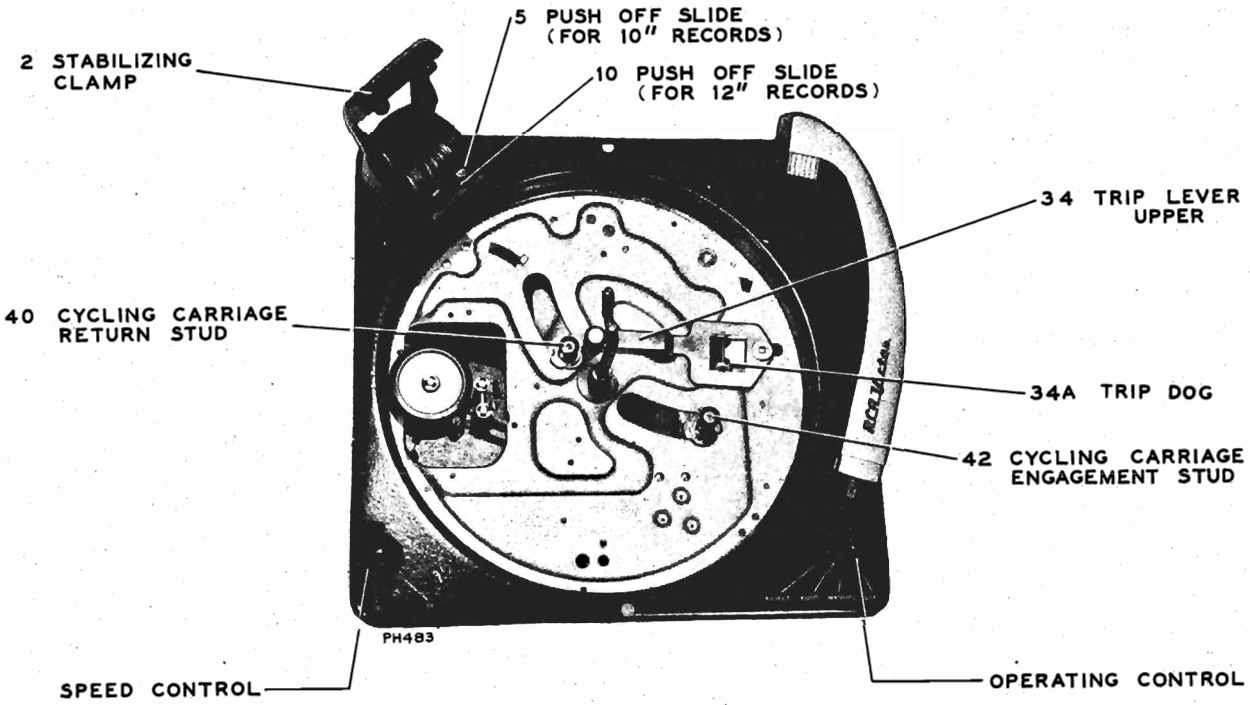

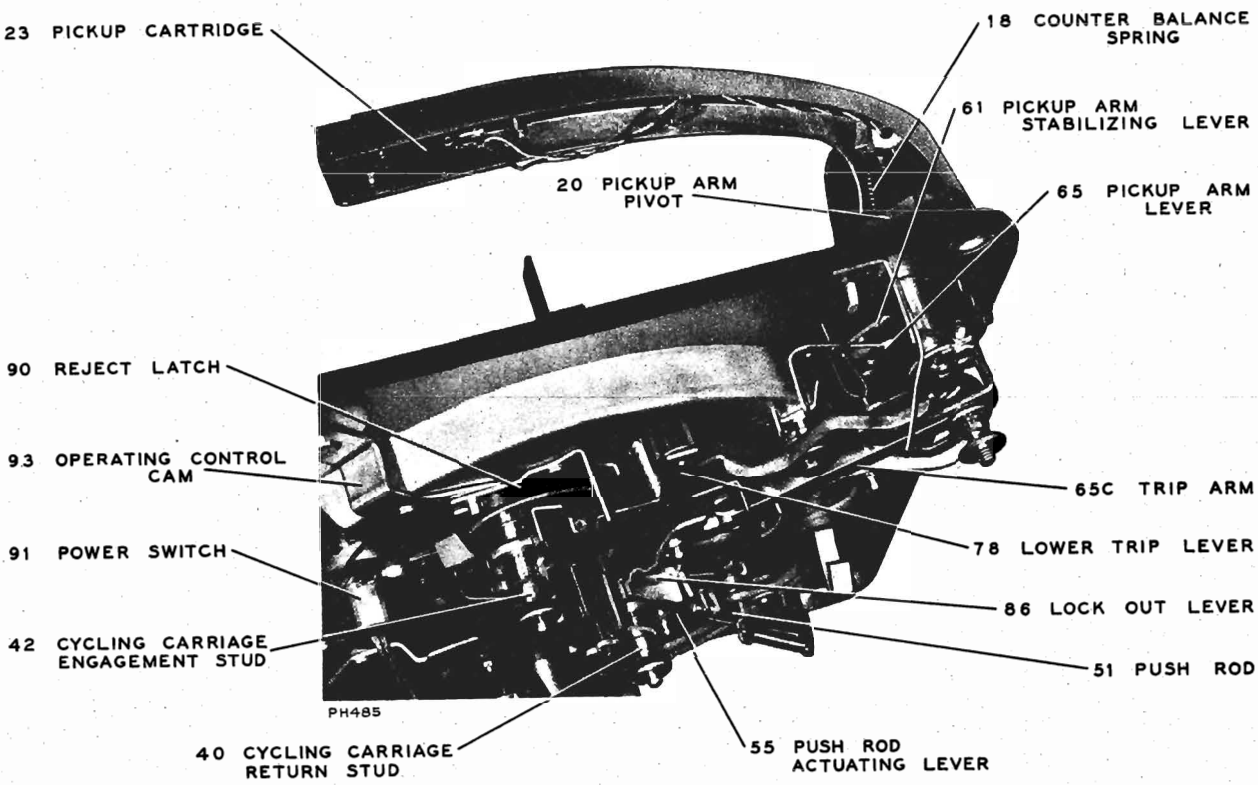

©John F. Rider

Compliments of www.nucow.com

MODELS 960282-1, 960282-2, 960282-3, 960282-4, 960282-5

CYCLE OF OPERATION

Function	Description
Place a stack of 10 or 12 inch records over the center post. Lower the record stabilizing clamp.	1. The records are supported by notch or step in center post. 2. The edge of the records rest on the separator shelf. 10 inch records on the 10 inch shelf (4) 12 inch records on the 12 inch shelf (9) 3. The position of the 10 inch support shelf (4) (up or down) determines the landing position of the pickup due to the action on the landing change (59) and index (62) levers. 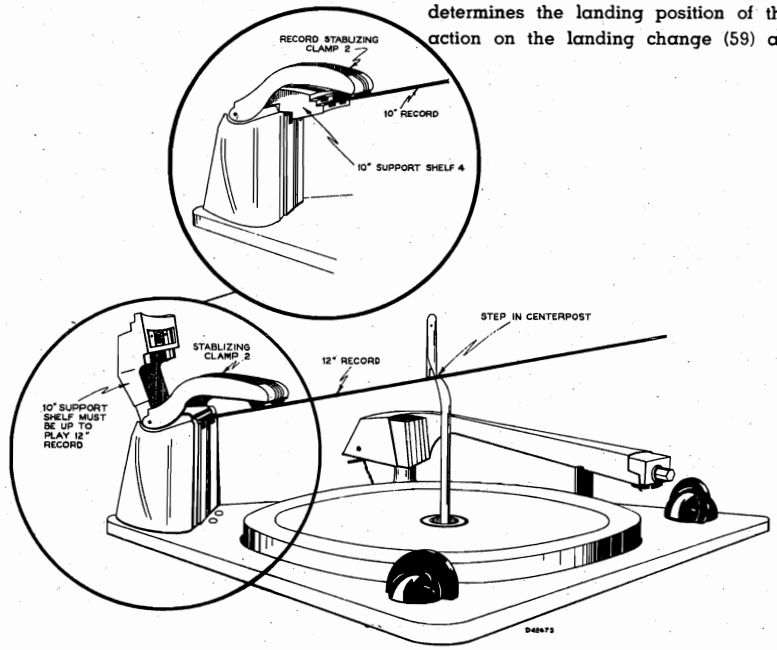
Turn speed selector knob to 78 or 33⅓ rpm position (depending on type of record).	1. The motor has a turned down shaft providing a means of changing speed by raising or lowering the idler on the dual diameter shaft. 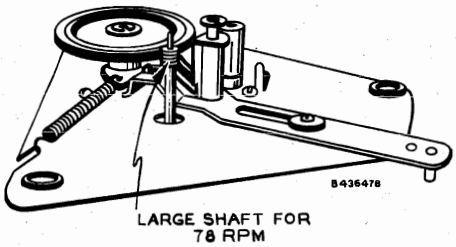 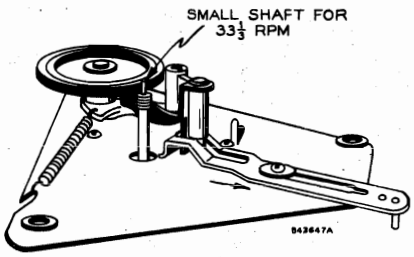
Rotate stylus knob.	1. The rotation of the stylus knob selects the proper stylus depending on the type of record to be played. 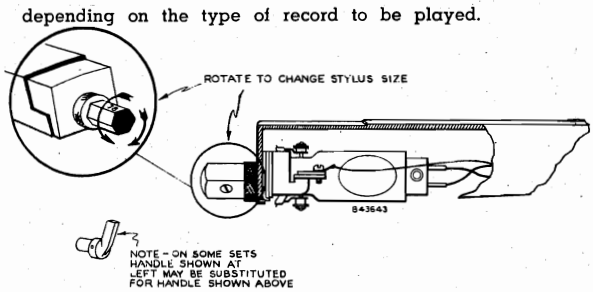
Push Control knob to reject position and release.	1. The Operating Control detent (74) mechanically connected to control knob engages and actuates the power switch (91) starting the turntable rotating. 2. Further rotation of the control knob moves the lower trip lever (78) sufficiently to allow the trip dog (34A) to slide off the end of the trip latch (89).

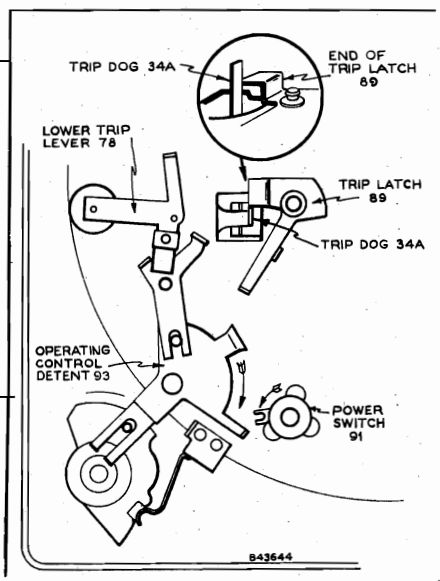

©John F. Rider

Compliments of www.nucow.com

MODELS 960282-1, 960282-2, 960282-3, 960282-4, 960282-5

3. As the trip dog slides off the trip latch, the trip lever (34) has moved in sufficiently for the offset on the turntable shaft to contact the end of the trip lever and push it back.
4. The backward movement of the trip lever (34) unlatches cycling engagement stud (42) allowing it to raise and engage the cycling spiral.

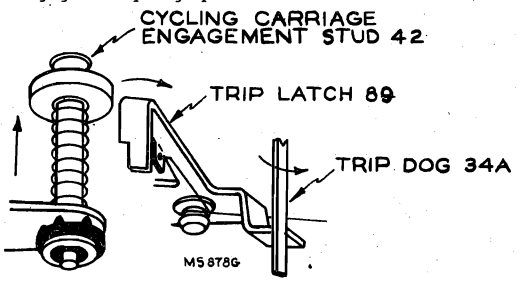

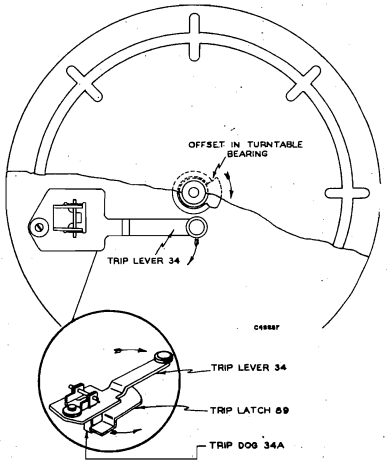

Cycling starts.

1. As the cycling carriage engagement stud (42) engages the spiral on the under side of the turntable, the carriage begins to move counterclockwise (viewed from the bottom of the motorboard) about its pivot.

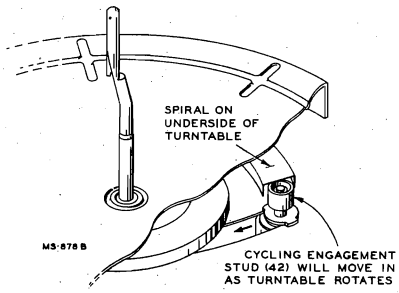

2. The inclined end of the carriage located beneath the pick-up arm pivot raises the elevating rod (19) lifting the pick-up arm.
3. The same end of the cycling carriage has two spring steel blades forming a frictional connection between the cycling carriage and the pickup arm lever (65) by wedging the disc portion of the pickup arm lever between the two blades. This moves the pickup arm outward.

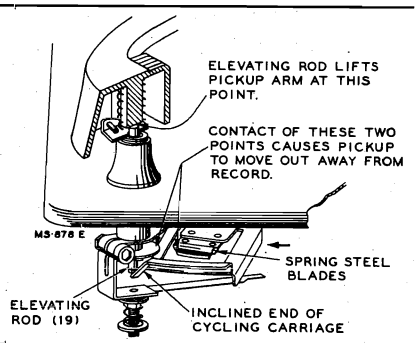

4. A small tab on the cycling carriage contacts and moves the pickup arm stabilizing lever (61) against the stud (65A) mounted on the tension spring incorporated in the pickup arm lever (65). This contact stabilizes the pickup arm in its movement during change cycle.

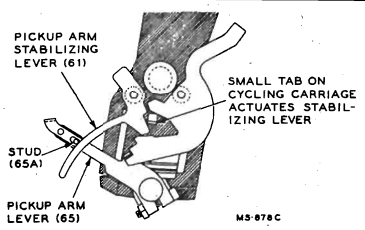

Record drops to the turntable.

1. As the cycling carriage continues to rotate, the end nearest the support post contacts push rod actuating lever (55), starting the action necessary to push the record off the center post.
2. The movement of the push rod actuating lever (55) through the linkage of push rod (51) push-off slide actuating lever (30) and push-off slide (5 or 10) pushes the record off the center post.
3. Record drops to turntable.

Note: The mechanism incorporates two push-off slides; one for ten inch (5) and one for twelve inch records (10).

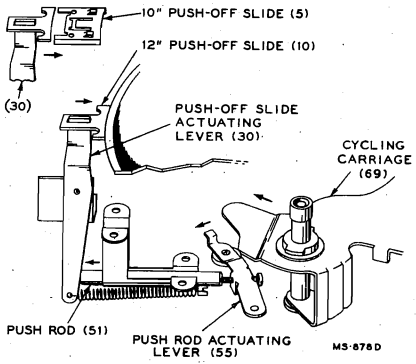

©John F. Rider

Compliments of www.nucow.com

MODELS 960282-1, 960282-2, 960282-3, 960282-4, 960282-5

Pickup moves in for landing.

1. Up to this time the cycling carriage (69) is moving in a counterclockwise direction (viewed from the bottom). After the record is pushed off the center post the lock out lever (86) mounted on cycling carriage contacts the stop and in so doing unlatches the cycling carriage return stud (40).
2. As the cycling carriage return stud (40) raises to engage the spiral on the underside of the turntable, the cycling engagement stud (42) is pushed down and latched by the action of the incline in the spiral tract, thereby disengaging it from the spiral.
3. The cycling carriage is now moving clockwise (viewed from the bottom of the motorboard).

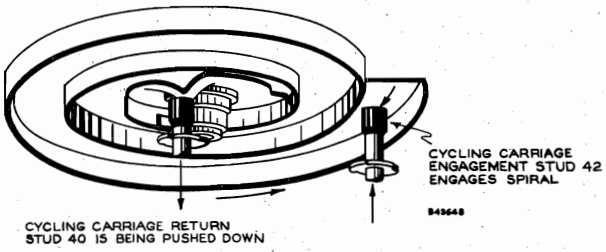

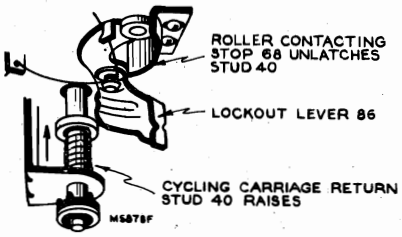

4. The end of the cycling carriage beneath the pickup arm pivot again makes the frictional contact with the disc on the pickup arm lever (65). This contact moves the pickup arm in for landing.
5. The pickup arm on its inward movement continues to be stabilized by the pickup arm stabilizing lever (61). This stabilizing continues until the tab on the pickup arm lever is against the ten or twelve inch landing notch in the indexing lever. At this point the pickup should be directly over the point of landing on the record.
6. An instant later the small tab on the cycling carriage contacts the side of the pickup arm stabilizing lever, unlatching the indexing lever (62) and permitting free motion of the pickup arm.
7. The elevating rod sliding down the small incline on the cycling carriage permits the pickup to land on the start of the record.

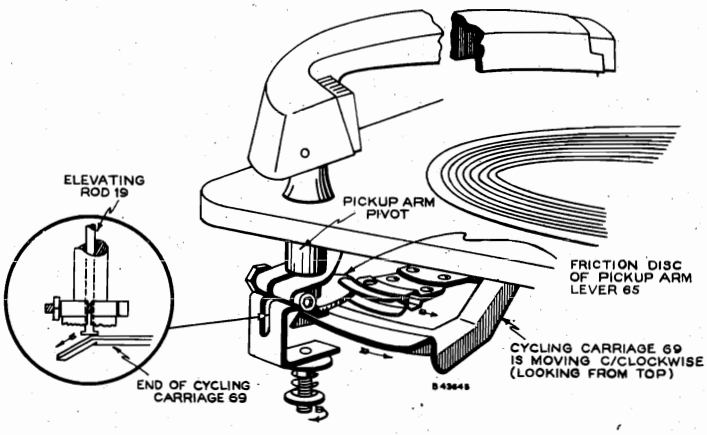

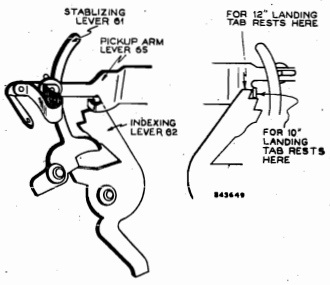

Note: It should be understood that the function of the indexing lever (62) is to determine the landing position of the pickup, both on ten and twelve inch records.

This is done by the pickup arm change lever (59) functioning as a stop for the indexing lever (62). The position of the pickup arm change lever in turn is governed by the position of the ten inch support shelf (4) (up or down).

8. As the pickup is landing the cycling carriage has reached its starting position and the cycling carriage return stud (40) is pushed down by the incline in the cycling spiral and locked in position.

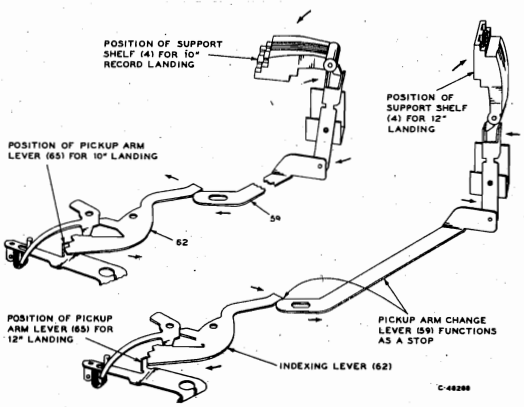

© John F. Rider

Compliments of www.nucow.com

MODELS 960282-1, 960282-2, 960282-3, 960282-4, 960282-5

Cycling is completed and record plays.

1. While the record plays, the end of the trip lever (34) is slowly moving toward the center post due to the force produced by the pickup arm down through the linkage of the pickup arm lever (65) trip arm (65C) and the lower trip lever (78).
2. As the trip lever slowly (34) approaches the offset on the inner shaft of the turntable it is pushed back slightly with each revolution of the turntable.
3. The trip lever continues to be pushed back against the friction clutch of the trip arm (65C) as long as the pickup arm moves in at a constant rate of speed.
4. When the pickup reaches the end of the selection the pickup moves into the eccentric groove quite rapidly. This rapid movement permits the trip dog (34A) to slide off the edge of the trip latch (89) before the offset on the turntable shaft has made one revolution. As the offset contacts the trip lever (34), it unlatches the trip latch (89) permitting the cycling carriage engagement stud (42) to raise and engage the cycling spiral starting a new cycle.

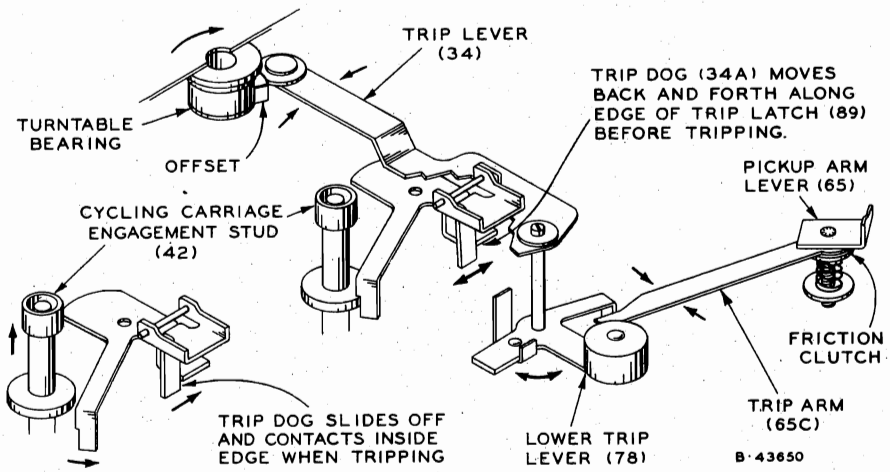

Pickup raises and moves out.

1. After the mechanism has been tripped the pickup arm moves out and rises by action of the cycling carriage (69) on the pickup arm lever (65) and the elevating rod (19).
2. The mechanism again follows the preceding sequence of dropping and playing records until the last record of this stack has been played. The mechanism is not provided with an automatic stop so the last selection is repeated until the pickup arm is placed on the rest and the power removed from the drive motor.

Note: The pickup arm can be raised and moved to the rest position any time after the mechanism has completed the change cycle, providing the pickup has not played more than approximately ⅓ of the selection. If the pickup arm is moved after this time, the mechanism will go into change cycle and the pickup arm should not be retarded in its movement.

The pickup arm can also be handled when the mechanism is not in operation, providing the pickup arm has freedom of motion.

Turn function control knob to manual.

1. The control detent (74) which is mechanically connected to the control knob, actuates the power switch through the control cam (93). This action starts the turntable rotating.
2. One end of the control cam also slides under the collar (79) on the cycling carriage engagement stud (42). This prevents the stud from raising if the trip lever is disturbed.
3. The control cam also holds the manual lock out lever (90) in such a position that it locks the lower trip lever (78) to prevent tripping. In this position, the trip lever (34) is held away preventing contact with off-set on turntable shaft.

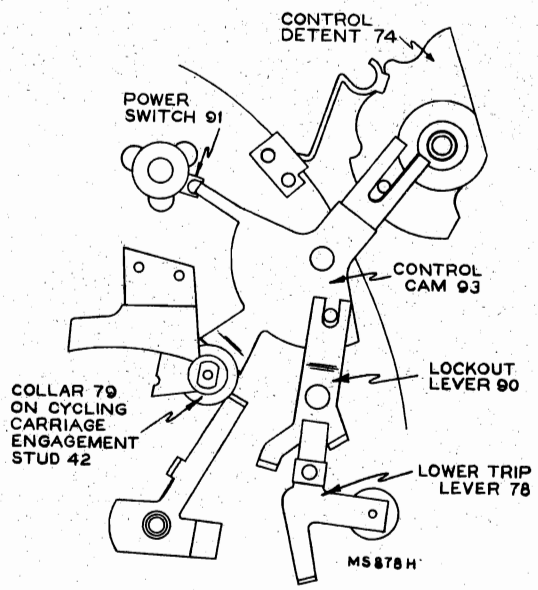

©John F. Rider

Compliments of www.nucow.com

MODELS 960282-1, 960282-2, 960282-3, 960282-4, 960282-5

ADJUSTMENTS

POSITION OF SUPPORT POST

1. Loosen three mounting screws at the base of the support post.
2. Slide support post to a position as indicated in accompanying drawing. The curvature of the shelf should conform with a 12" record.
3. After push-off slides have been adjusted, try a stack of both 10 and 12 inch records to determine the ease of separation. A compromise from the setting may be necessary due to differences in length of the 10 inch support shelf (4).

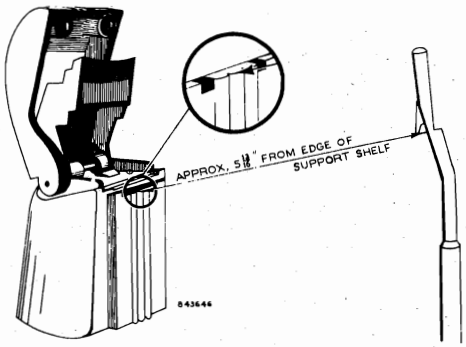

Adjustment of Push-Off Slides

1. Trip the mechanism and turn the turntable by hand until the cycling carriage has rotated counterclockwise, (Viewed from the bottom) to its limit.
2. Adjust screw 57 on push rod actuating lever until the 12 inch push-off slide is extending approximately 1/16" over the edge of the shelf.
3. Turn lock nut to hold screw and try a stack of 10 and 12 inch records for ease in separation.

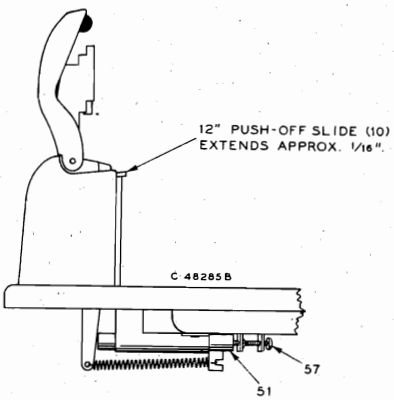

Adjust lock out lever stop (68)

The lock out lever stop (68) should be so adjusted that the cycling carriage return stud (40) raises an instant before the spiral engagement stud (42) is pushed down. If this timing is not properly made the mechanism will jam.

Adjustment of friction clutch on trip arm

1. Turn the threaded washer on the pickup arm lever to produce sufficient friction for trip arm so the mechanism will have positive tripping. Care must be exercised against excessive friction as it would cause premature wear on the side walls of the record or in many cases, actually jump the grooves.

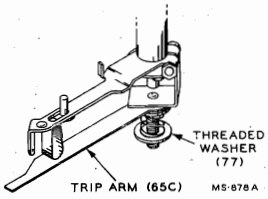

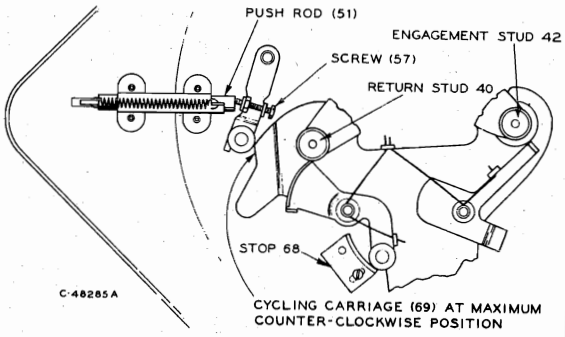

Pickup Landing Adjustment

1. Disconnect power from mechanism.
2. Place a 10" record on turntable.
3. Turn the operating control to reject and release.
4. Rotate the turntable by hand until the tab on the pickup arm lever (65) is about ready to move away from the indexing lever. (The pickup will be a few inches above the record at this moment).
5. Loosen adjustment screw and hold the pickup arm lever in this position while moving the pickup arm directly above the point of landing. (Landing should be about half way between the edge of the record and the start of the recorded section. Approximately 4-11/16" from the side of the center post for a 10" record).
6. Tighten adjustment screw, apply power and check the pickup landing on both 10 and 12 inch records.
   If mechanism fails to land properly on 12" records the tab may be bent. In that case bend slightly.

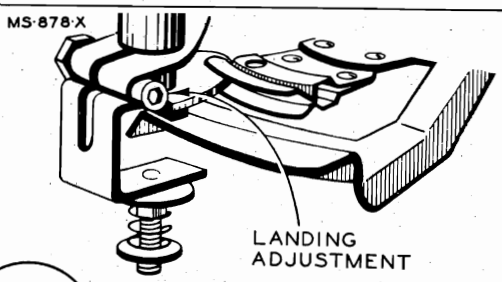

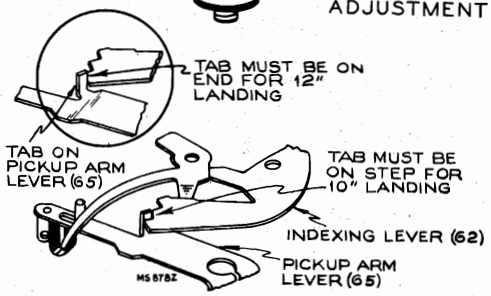

©John F. Rider

Compliments of www.nucow.com

MODELS 960282-1, 960282-2, 960282-3, 960282-4, 960282-5

SERVICE HINTS

Fails To Separate Records Properly

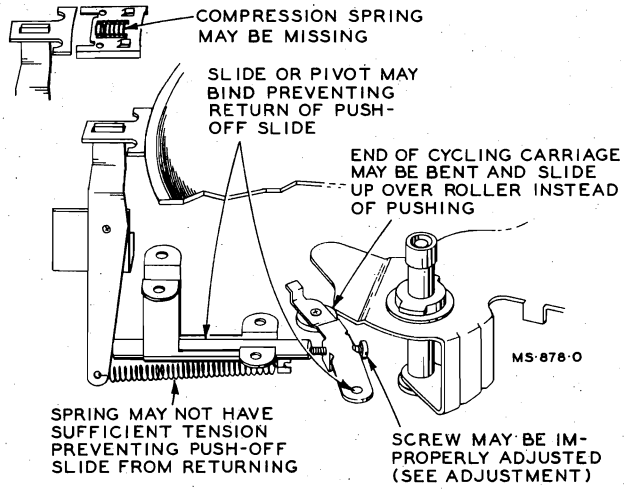

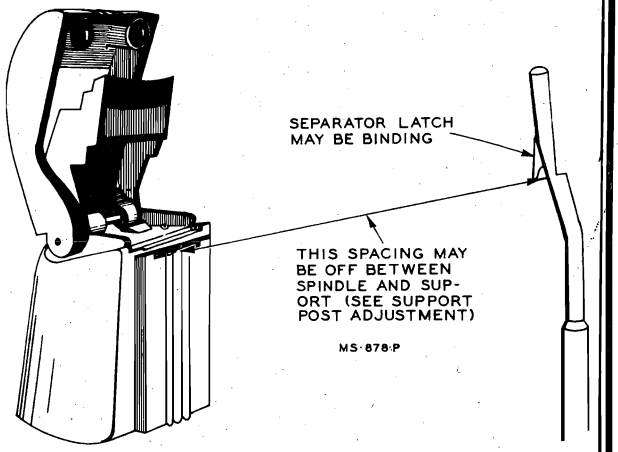

Fails To Complete Cycle

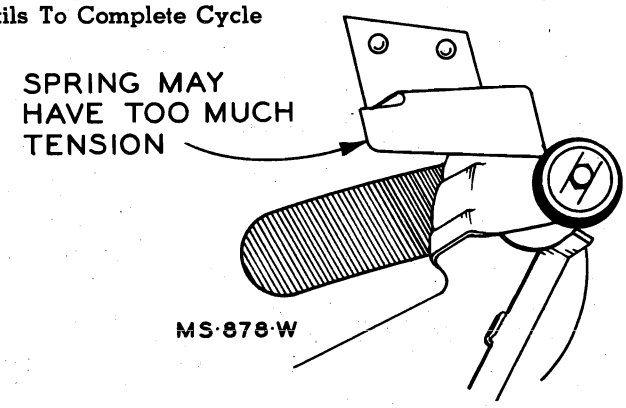

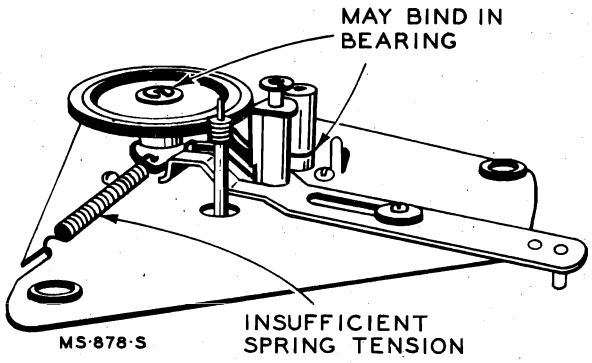

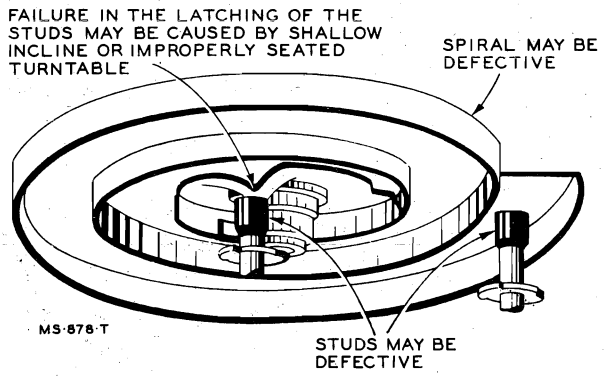

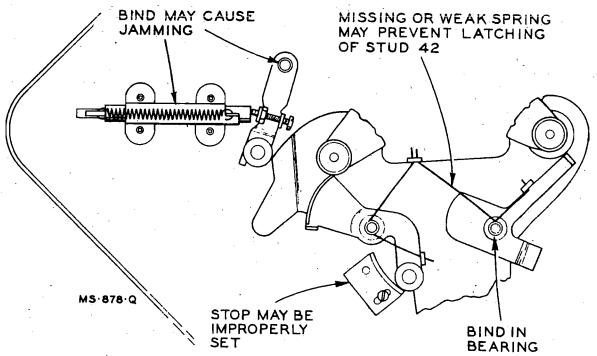

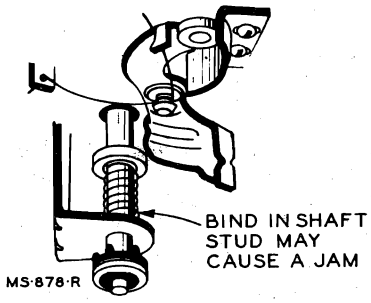

Weak—Distorted or No Output

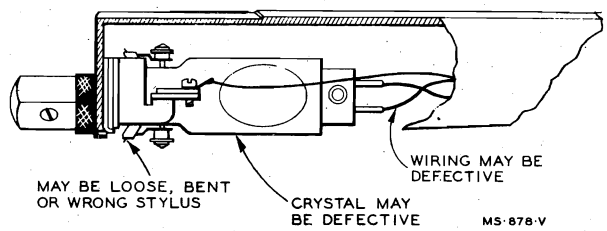

©John F. Rider

Compliments of www.nucow.com

MODELS 960282-1, 960282-2, 960282-3, 960282-4, 960282-5

SERVICE HINTS (Continued)

Fails to Trip

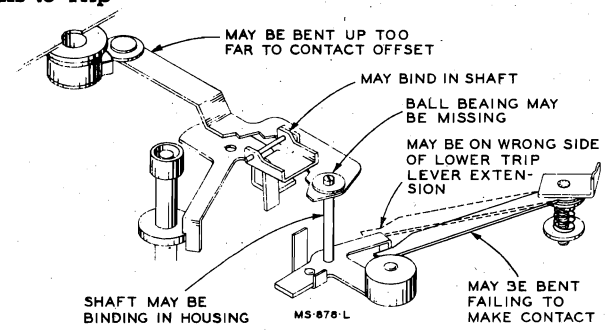

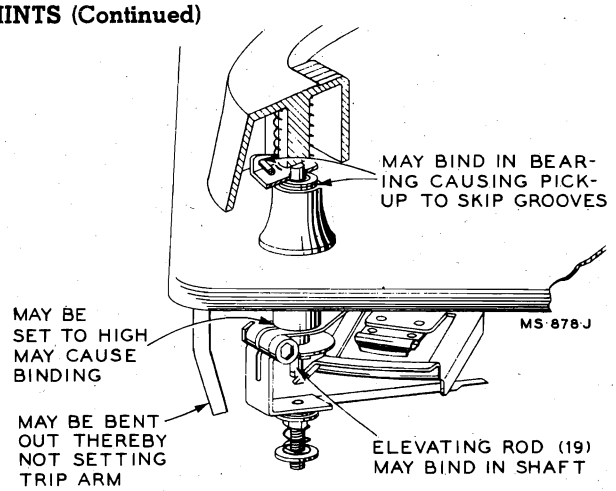

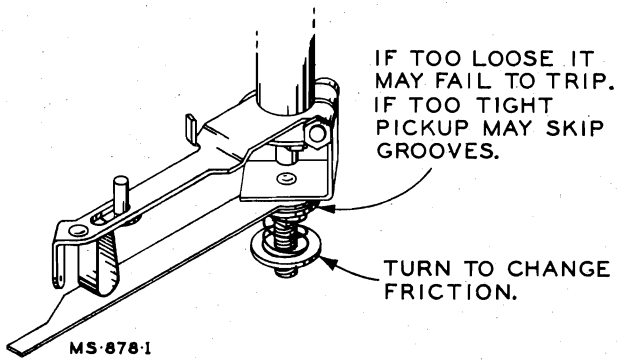

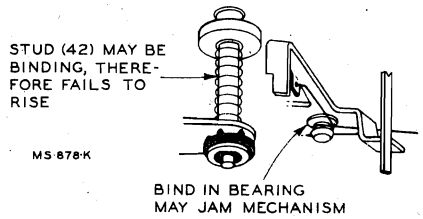

Pickup Skips Grooves

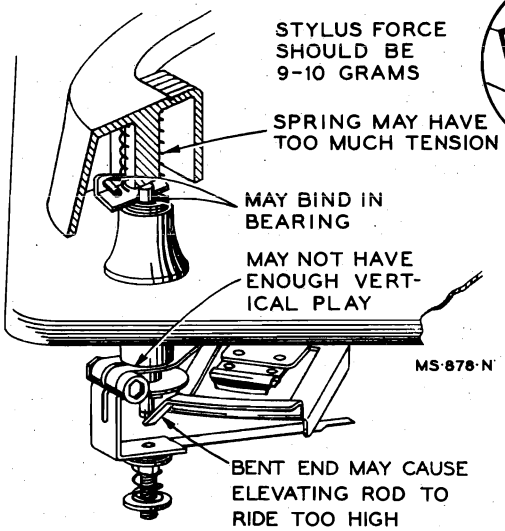

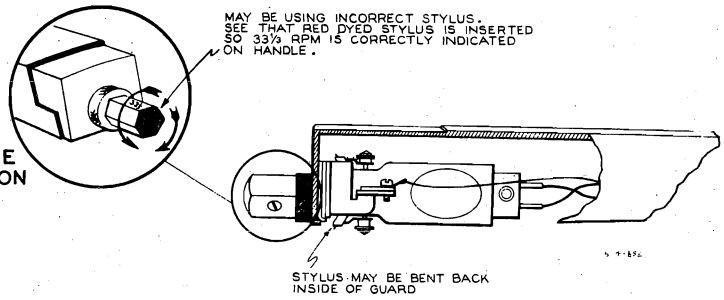

Turntable Fails To Change Speed or "Wow"

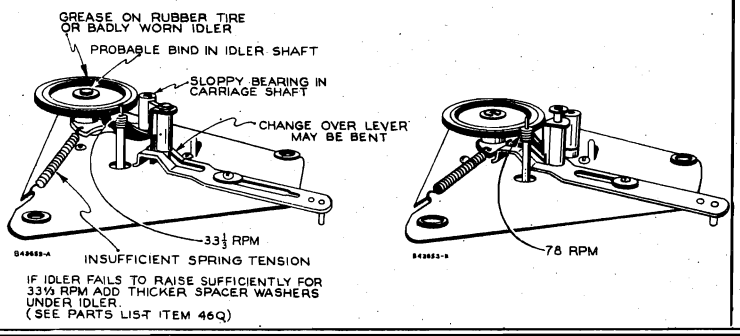

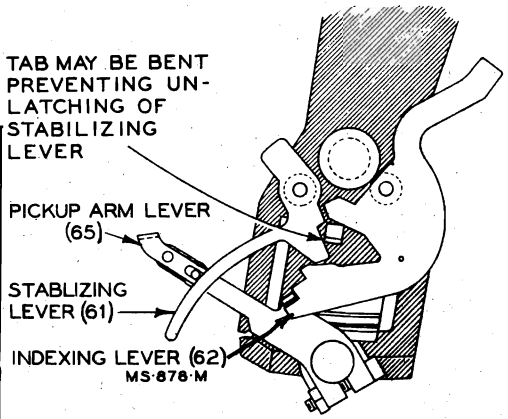

©John F. Rider

Compliments of www.nucow.com

MODELS 960282-1, 960282-2,
960282-3, 960282-4, 960282-5

SERVICE HINTS (Continued)

Fails To Land Properly

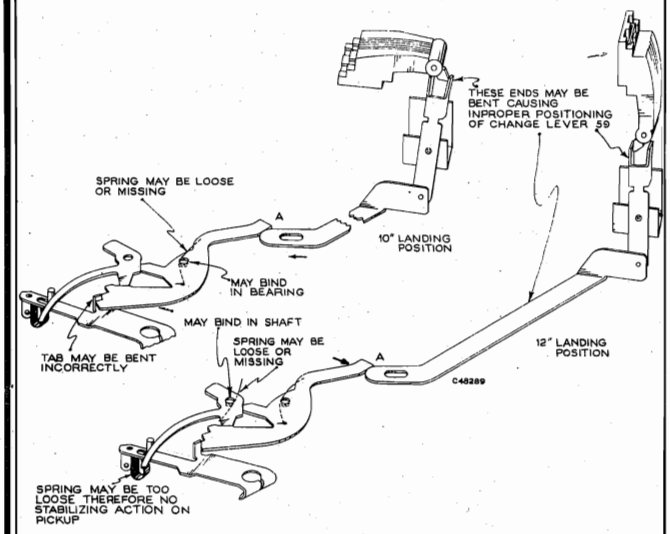

Turntable Fails To Rotate

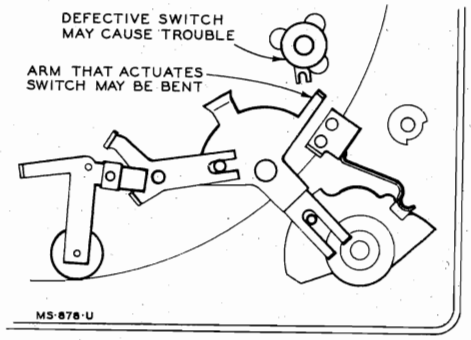

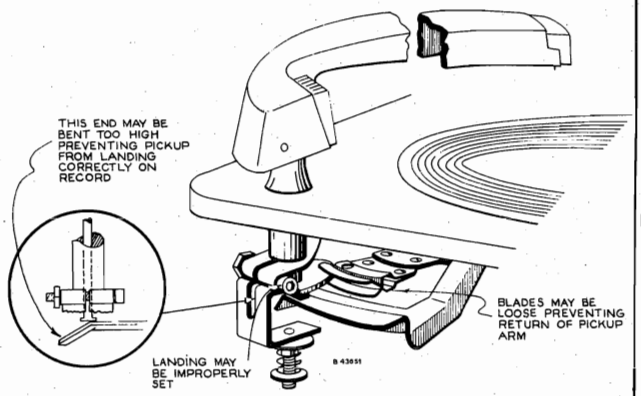

INCLINE IN SPIRAL MAY BE TOO SHALLOW THEREBY FAILING TO PUSH STUDS DOWN FAR ENOUGH CAUSING A JAM.
(BEND INCLINE AWAY FROM TURNTABLE SLIGHTLY)

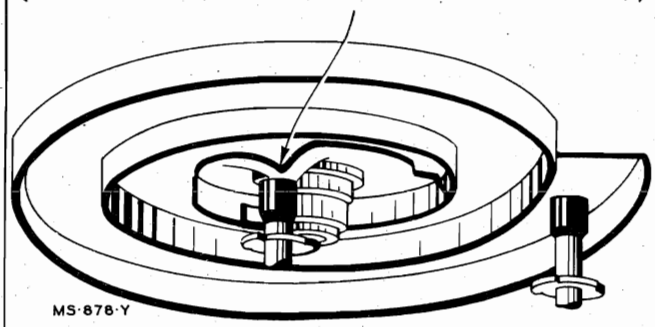

DO YOU KNOW?

(Jamming or Stalling)

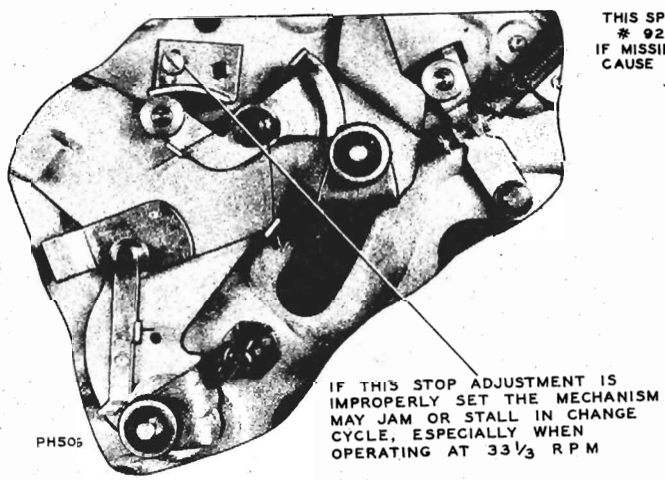

THIS SPRING IS # 92 AND IF MISSING WILL CAUSE A JAM

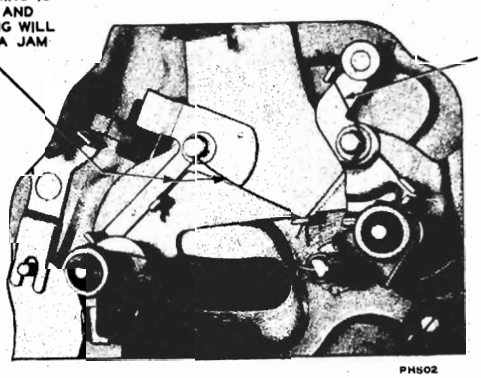

THIS SPRING IS # 87 AND IF MISSING STUD #40 WILL REMAIN ENGAGED WITH CYCLING SPIRAL CAUSING A JAM

©John F. Rider

Compliments of www.nucow.com

MODELS 960282-1, 960282-2, 960282-3, 960282-4, 960282-5

DO YOU KNOW?

(Tripping)

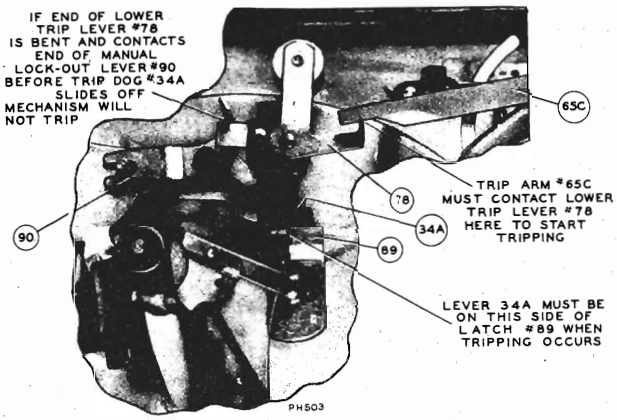

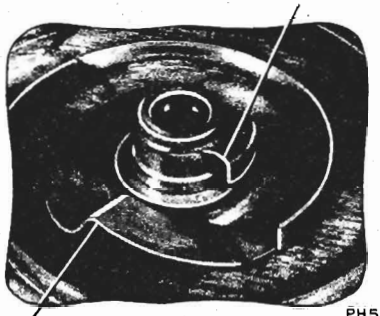

(Jumping grooves)

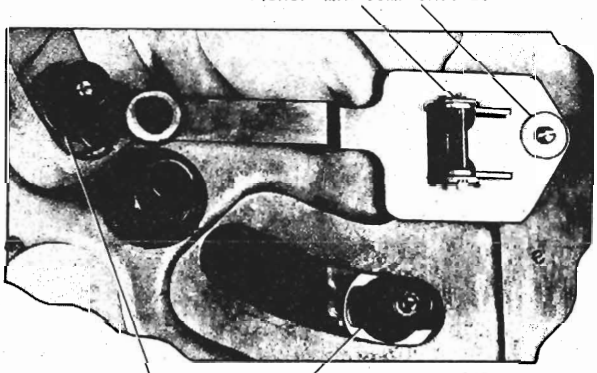

(Record separation)

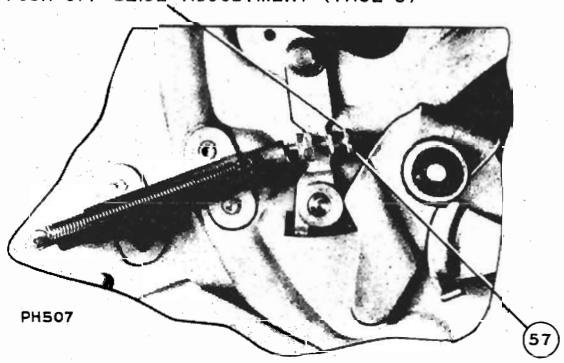

(Pickup landing)

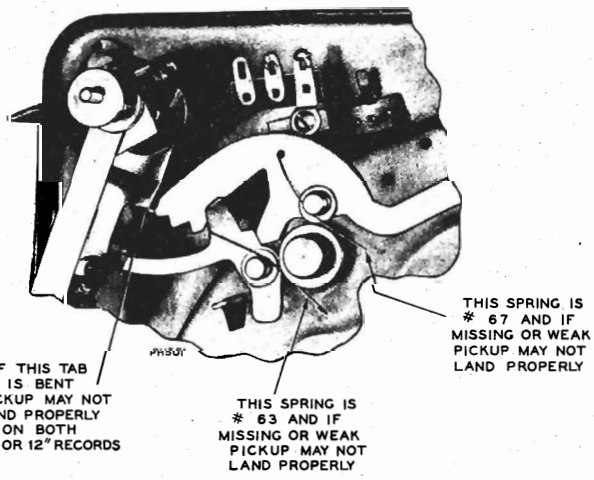

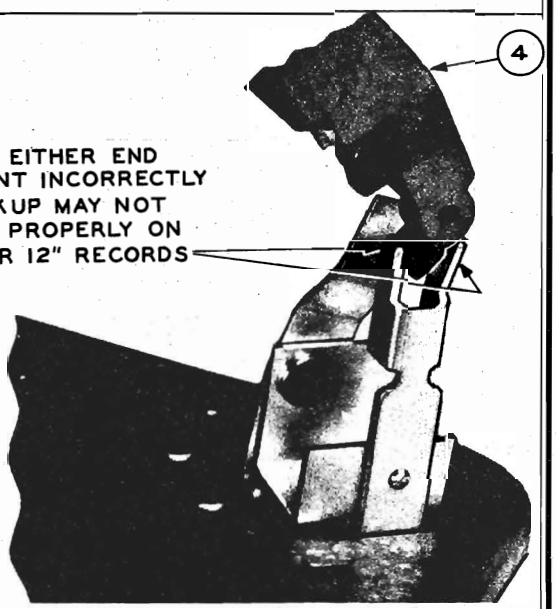

©John F. Rider

Compliments of www.nucow.com

MODELS 960282-1, 960282-2, 960282-3, 960282-4, 960282-5

DO YOU KNOW?

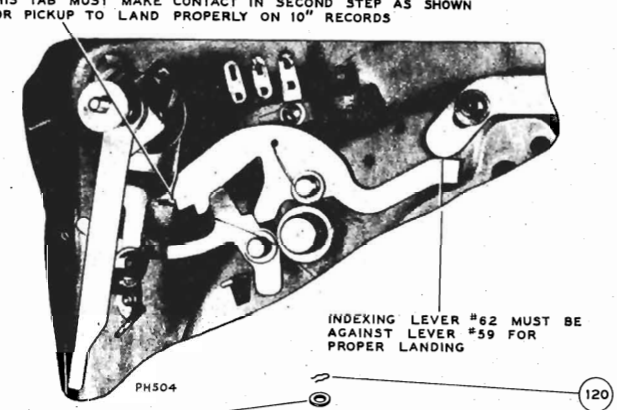

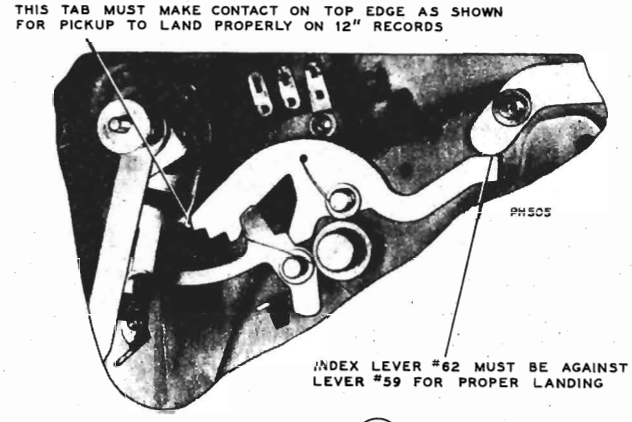

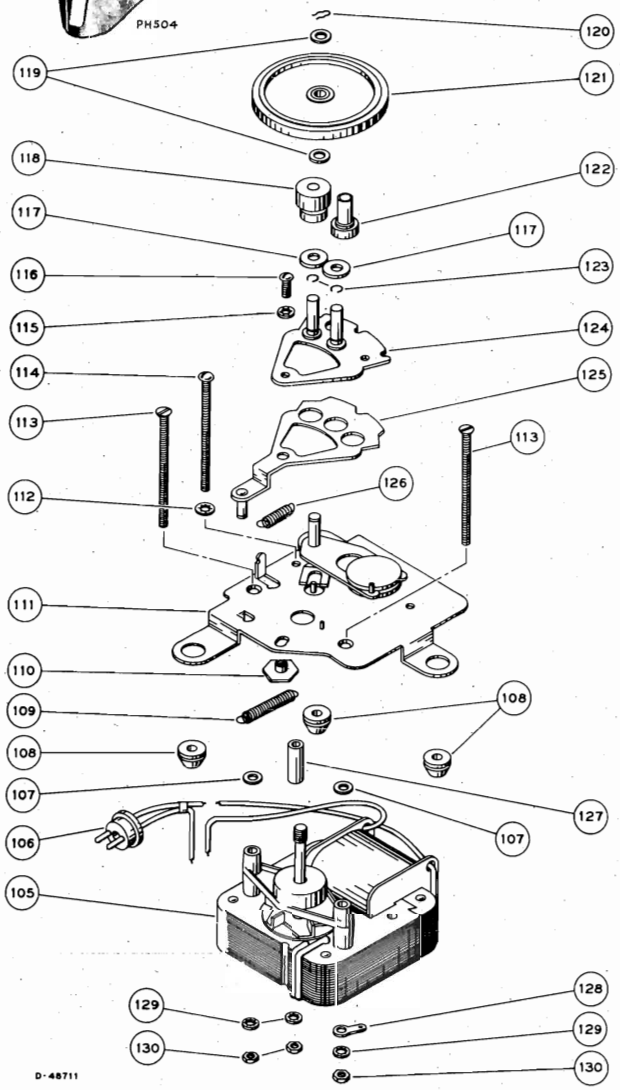

Exploded view of 50/60 cycle motor (960282-2 and -3)

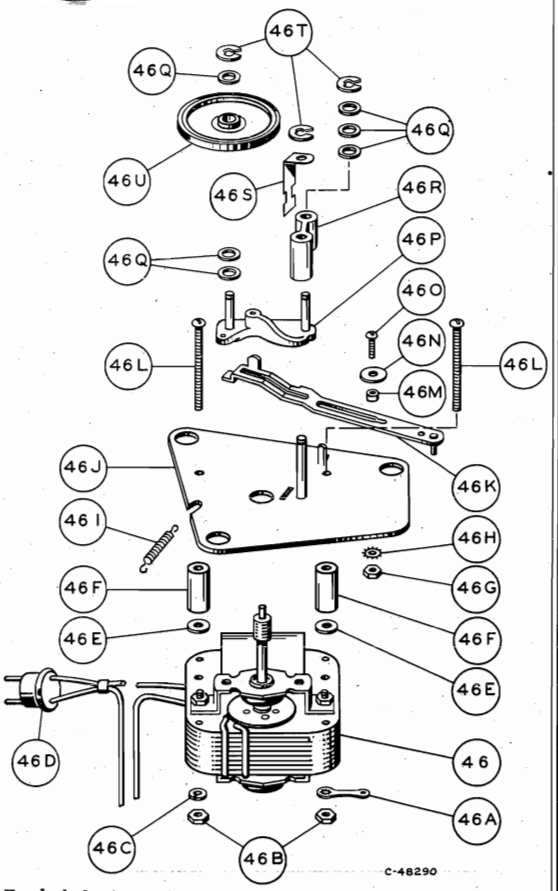

Exploded view of 60 cycle motor (960282-1, -4, and -5)

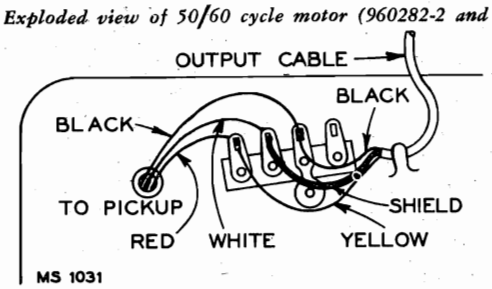

Pickup Lead Connections to Terminal Board (Model A55 only)

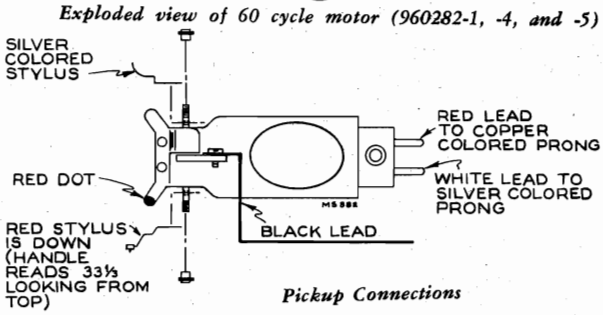

Pickup Connections

Some record changers have a resistor/capacitor combination on the pickup lead terminal board. This is to compensate for the differing frequency response of various instruments. Correct values of these resistors and capacitors are indicated in the Service Data for the instruments which use the record changer.

©John F. Rider

Compliments of www.nucow.com

PICKUP INFORMATION

MODELS 960282-1, 960282-2, 960282-3, 960282-4, 960282-5

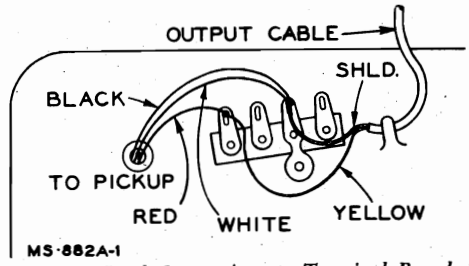

Pickup Lead Connections to Terminal Board (all instruments except Model A55)

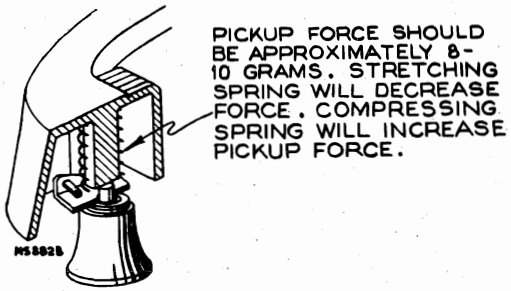

Counterbalance Spring

LUBRICATION

The motor bearings and all pivot bearings, excepting the pickup arm pivot, should be lubricated with S.A.E. 10 machine oil.

The pickup arm and the trip lever bearings are riding on ball bearings which should be packed sparingly with light grease, preferably STA-PUT #512. Use STA-PUT #512 or equivalent grease on the edges of all cams and pivots or sliding contacts including the spiral track and engagement stud.

NOTE: Do not oil friction clutch or trip arm 65C, spring steel wedge on end of cycling carriage 69 or friction brake 88.

NOTE: Keep oil and grease from all rubber parts of the mechanism.

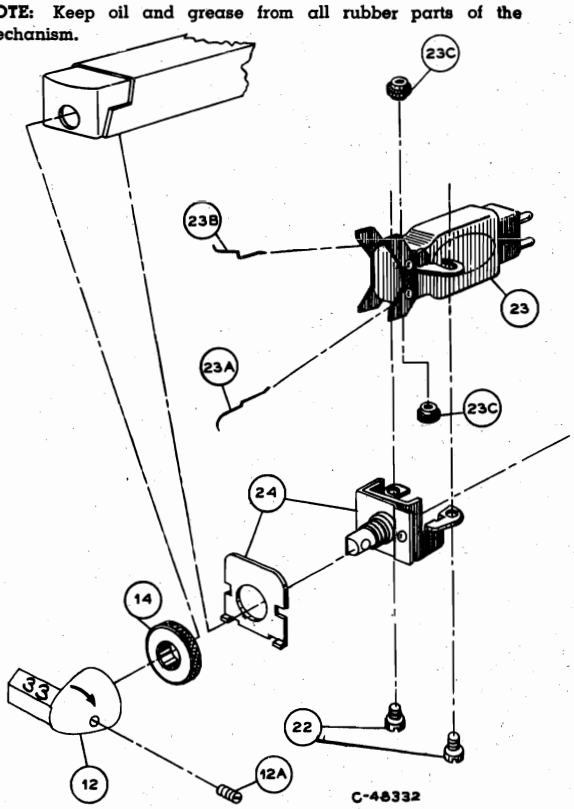

Note: The stylus are not replaceable in Stock No. S-5652 ceramic pickup used in 960282-2.

Pickup Assembly—Models 960282-1, -2 and -3

These record changers are used in instruments manufactured for RCA International Division.

They are identical to 960282-1 except for the following:

1. A motor is used which may be converted for operation on a 50 cycle power supply. Stock No. S-5637 motor includes mounting plate, grommets, idler wheel and change-over mechanism. A 50 cycle conversion spring is also included.
2. Two levers (Items #101 and #102) are different. (Order replacements by description and item number.)
3. A ceramic pickup cartridge is used only with 960282-2. Stock No. S-5652 ceramic cartridge complete, including styluses.
4. Stock No. 75044 crystal pickup is used with 960282-3.

NOTE: For operation on a 50 cycle power supply. Remove original spring sleeve from motor shaft and replace with the 50 cycle conversion spring.

Replacements for items used only on 960282-2 and 960282-3 are stocked by RCA International Distributors but are not stocked in the U. S. A. Order parts giving full description.

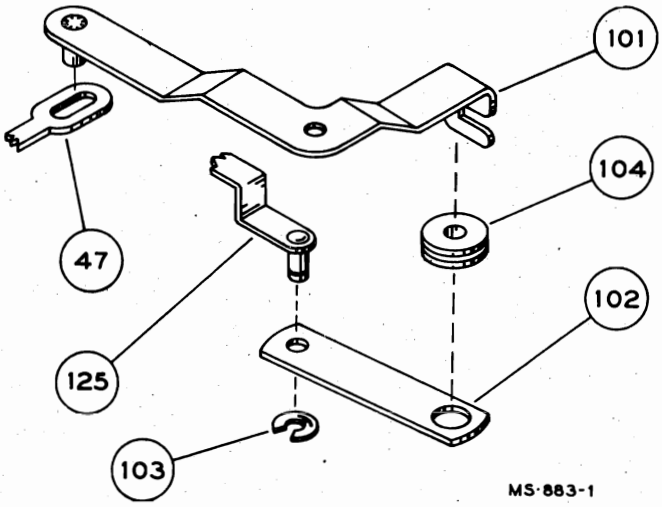

Speed control levers used in 960282-2 and 960282-3 (order by item No. from RCA International Distributors only)

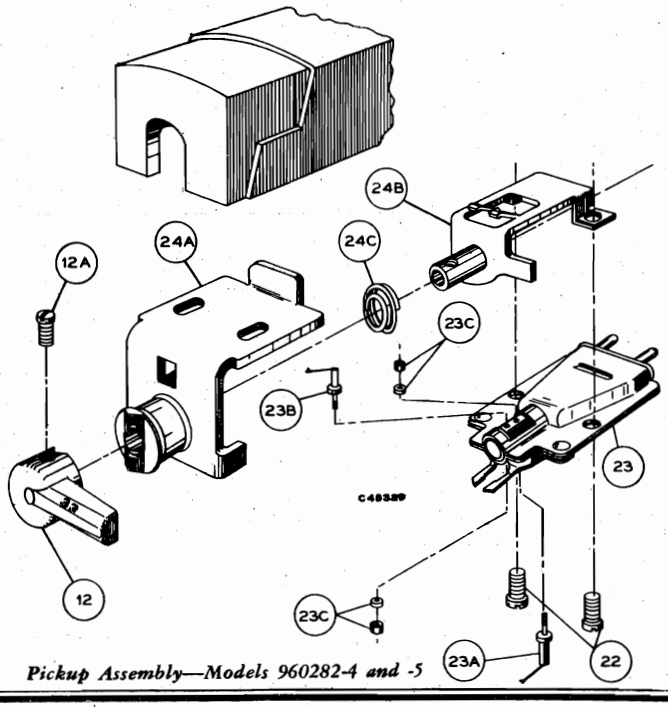

Pickup Assembly—Models 960282-4 and -5

© John F. Rider

Compliments of www.nucow.com

MODELS 960282-1, 960282-2,
960282-3, 960282-4, 960282-5

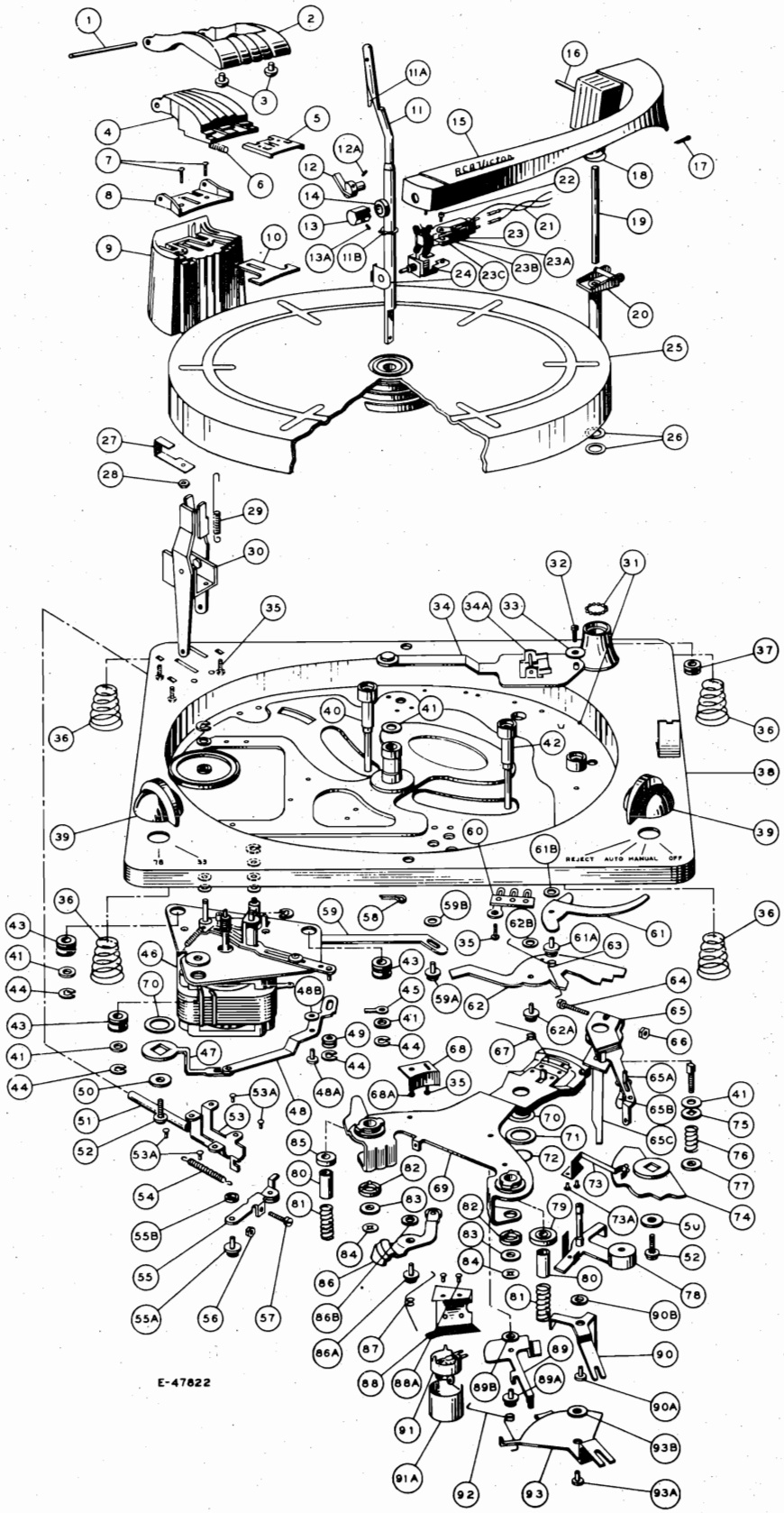

Exploded view of 960282-1

©John F. Rider

Compliments of www.nucow.com

MODELS 960282-1, 960282-2, 960282-3, 960282-4, 960282-5

1	75254	Pin—Push-off box hinge pin
2	75255	Clamp—Stabilizing clamp assembly including rubber bumpers—maroon—for 960282-1, -2, -3 and -4
2	75921	Clamp—Stabilizing clamp assembly including rubber bumpers—light brown—for 960282-5
3	75256	Bumper—Rubber bumper for stabilizing clamp (2 req'd) (2 included)
4	75257	Support — 10" record support — maroon — for 960282-1, -2, -3 and -4
4	75922	Support—10" record support—light brown—for 960282-5
5	75258	Slide—10" record push-off slide
6	75259	Spring—Return spring for 10" push-off slide (.250" O.D. x 9/16"—5 turns)
7	——	Screw—#4-40 x 3/8" round head steel machine screw
8	75260	Cover—12" record push-off slide cover
9	75261	Support — Main support casting for push-off mechanism—maroon—for 960282-1, -2, -3 and -4
9	75923	Support—Main support casting for push-off mechanism—light brown—for 960282-5
10	75262	Slide—12" record push-off slide
11	75263	Spindle—Turntable spindle or centerpost (includes ILL.11A)
11B	75303	Ring—Turntable retainer ring
12	75264	Knob—Stylus selector knob complete with set screw—lever type—for 960282-1, -2 and -3
12	75924	Knob—Stylus selector knob complete with set screw—lever type—for 960282-4 and -5
12A	——	Screw—Screw for handle type control knob (included with Stock Nos. 75264 and 75924)
13	——	Knob—Stylus selector knob—hexagon—not used in actual production
13A	——	Screw—Screw for hexagon control knob
14	75265	Collar—Threaded collar for pickup mounting assembly—for 960282-1, -2 and -3
15	75266	Arm—Pickup arm shell complete with fibre guide—for 960282-1, -2, and -3
15	75925	Arm—Pickup arm shell for 960282-4 and -5
16	75267	Pin—Pivot arm pin
17	75268	Spring—Retaining spring (hair-pin) for pivot arm pin
18	75269	Spring—Counterbalance spring for 960282-1, -2 and -3
18	75929	Spring—Counterbalance spring for 960282-4 and -5
19	75270	Rod—Elevating rod
20	75271	Arm—Pivot arm and shaft
21	75272	Cable—Three wire pickup cable (12") complete with connectors
22	——	Screw—Mounting screw for pickup cartridge (4-40 x 1/8" fillister head) two required—for 960282-1, -2 and -3
22	75933	Screw—Mounting screw for pickup cartridge (2-56 x 1/8" fillister head) two required for 960282-4 and -5
23	75044	Pickup—Crystal pickup complete with two stylus—for 960282-1 and -3
23	S-5652	Pickup—Ceramic pickup complete with two stylus—for 960282-2
23	75475	Pickup—Crystal pickup complete with two stylus—for 960282-4 and -5
23A	75045	Stylus—33 1/3 r.p.m. stylus—RED—for #75044 pickup cartridge
23A	75496	Stylus—33 1/3 r.p.m. stylus—RED—for #75475 pickup cartridge
23B	75046	Stylus—78 r.p.m. stylus — PLAIN — for #75044 pickup cartridge
23B	75497	Stylus—78 r.p.m. stylus — PLAIN — for #75475 pickup cartridge
23C	74274	Nut—Stylus retaining nut—knurled—for #75044 pickup
23C	74230	Nut — Stylus retaining nut and washer — for #75475 pickup cartridge
24	75273	Mount—Pickup cartridge mount assembly (2-piece assembly)—for 960282-1, -2 and -3
24A	75931	Bracket—Bracket and bearing assembly (to mount #75932 rotor in #75925 arm) — for 960282-4 and -5
24B	75932	Rotor — Rotor bracket and shaft assembly (to mount #75475 pickup in #75931 bracket)—for 960282-4 and -5
24C	75930	Spring—Detent spring for rotor bracket assembly #75932—for 960282-4 and -5
24D	75975	Screw—3-48 x 1/8" truss head screw to mount #75931 bracket to #75925 pickup arm shell —for 960282-4 and -5
25	75275	Turntable—10" dia.
26	75276	Washer—Spacing washer (2 req'd) (.008 x 13/32" I.D. x 9/16" I.D.—Phosphor Bronze)
27	75277	Spring—Pressure spring for 10" record support
28	——	Nut—4-40 hex nut
29	75278	Spring—Tension spring for stabilizing clamp (.216" O.D. x 1 7/8"—20 turns)
30	75279	Lever—Push-off slide actuating lever assembly
31	3658	Ball—Steel ball (3/32" dia.)
32	——	Screw—#4-40 x 1/4" fillister head screw
33	75280	Washer—Steel washer (.031" x .125" x 1/2")
34	75281	Lever—Trip lever assembly including trip dog. ILL. 34A
35	28360	Screw—Screw to mount main support (3 req'd) (#6-32 x 3/8" thread cutting)
36	75040	Spring—Conical spring to mount record changer —4 required—for 960282-1, -2 and -3
36	75927	Spring—Conical spring to mount record changer —3 required—for 960282-4 and -5
37	75282	Grommet—Rubber grommet for pickup cable exit
38	——	Board—Motorboard complete with all riveted, staked and welded parts
39	75283	Knob—Speed selector or function control knob —maroon—for 960282-1, -2, -3 and -4
39	75928	Knob—Speed selector or function control knob—light brown—for 960282-5
40	75284	Stud—Cycling carriage return stud including shaft, washer and cambric roller
41	75285	Washer—Friction spring washer for turntable and motor mounting. (.250" x .281" I.D. x .450" O.D.)
42	75284	Stud—Cycling carriage engagement stud including shaft, washer and cambric roller
43	75286	Grommet—Rubber grommet to mount motor (3 req'd)
44	75287	Washer—"C" washer to mount motor (3 req'd)
45	——	Lug—Terminal lug
46	75288	Motor—117 volt, 60 cycle motor complete with mounting plate, idler wheel and change-over mechanism—for 960282-1, -4 and -5. See illustration on page 13
46	S-5637	Motor—117 volt, 50/60 cycle motor complete with mounting plate, idler wheel and change-over mechanism — for 960282-2 and -3. See illustration on page 13
		The following motor parts (46A to 46U) are for #75288 motor only
46A	——	Lug—Terminal lug
46B	——	Nut—#6-32 hex nut to mount top plate (2 req'd)
46C	——	Lockwasher—#6 lockwasher (split) to mount top plate
46D	30870	Connector—2 contact male connector for motor leads
46E	——	Washer—Flat washer for under metal spacer (2 req'd)
46F	75290	Spacer—Metal spacer for motor mounting (2 req'd)
46G	——	Nut—#4 hex nut to mount idler riser slide
46H	——	Lockwasher—#4 (external) lockwasher to mount idler riser slide
46I	75291	Spring—Tension spring for idler carriage
46J	75292	Plate—Motor top plate including stud for idler pivot link
46K	75293	Slide—Idler riser slide
46L	——	Screw—#6-32 x 1 3/4" round head brass machine screw to mount top plate (2 req'd)
46M	75294	Spacer—Metal spacer to mount idler riser slide
46N	——	Washer—Flat washer to mount idler riser slide
46O	——	Screw—Screw to mount idler riser slide (#4-40 x 3/8" round head steel machine screw)
46P	75295	Carriage—Idler carriage
46Q	75296	Washer—Fibre dampening washer .010 thick
	75436	Washer—Fibre dampening washer .020 thick
46R	75297	Link—Idler pivot link
46S	75298	Guide—Idler riser slide guide
46T	75287	Washer—"C" washer to mount idler carriage and idler wheel
46U	75300	Wheel—Idler wheel
47	75301	Arm—Speed selector arm
48	75302	Lever — Speed selector lever complete with mounting pivot stud and washer—for 960282-1, -4 and -5. See page 18 for description of 960282-2 and -3
49	75282	Grommet—Rubber grommet used in speed change assembly
50	75304	Washer—Spacer washer (small) for speed selector arm (.059" x .190" I.D. x 5/8" O.D.)
51	75305	Rod—Push rod
52	75306	Screw—Mounting screw complete with lockwasher for control knobs (10-32 x 3/8" fillister head-special)
53	75307	Housing—Push rod housing complete with four (4) rivets
54	75308	Spring—Tension spring for push rod
55	75309	Lever—Push rod actuating lever complete with mounting pivot stud and washer (includes Ill. 56 and 57)
56	——	Nut—#6 hex nut for push rod travel adjusting screw (includes 75309, Ill. 55)
57	——	Screw—Adjusting screw for push rod travel (#6-32 x 5/8" fillister head screw) (included in 75309, Ill. 55)
58	75310	Pin—Cotter pin for turntable spindle or centerpost
59	75311	Lever—Pickup arm landing change lever complete with mounting pivot stud and washer
60	——	Board—Terminal board (3 contact)
61	75312	Lever—Pickup arm stabilizing lever complete with mounting pivot stud and washer
62	75313	Lever—Pickup arm indexing lever complete with mounting pivot stud and washer
63	75314	Spring—Tension spring for stabilizing lever
64	75315	Screw—Screw to mount pickup arm lever (10-32" x 1" socket head cap screw)
65	75316	Lever—Pickup arm lever including trip arm, engagement stud and tension spring
66	——	Nut—#10 hex nut for pickup arm lever mounting screw
67	75317	Spring—Tension spring for indexing lever (2 turns)
68	75318	Stop—Lockout lever stop complete with mounting rivet
69	75319	Carriage—Cycling carriage
70	75320	Washer—Mounting washer (thin) for cycling carriage
71	75321	Washer—Mounting washer (thick) for cycling carriage
72	75322	Washer—Mounting washer (split) for cycling carriage
73	75323	Spring—Lock spring for detent complete with (2) rivets
74	75324	Detent—Operating control detent
75	75325	Washer—Friction washer (square-hole) for trip arm (.060" x .189" square I.D. x 5/8" O.D.)
76	75326	Spring—Friction adjustment spring for trip arm (.360" O.D. x 33/64"—5 1/2 turns)
77	75327	Washer—Threaded washer for adjusting trip arm friction (.0673 x .159" I.D. x 5/8" O.D.—.159" I.D. hole tapped #10-32)
78	75328	Lever—Lower trip lever
79	75329	Washer—Shouldered washer for cycling carriage engagement stud for Ill. 42
80	75330	Spacer—Metal spacer for cycling carriage studs
81	75331	Spring—Tension spring for cam roller (.379" O.D. x 1-1/32"—7 turns)
82	75332	Grommet—Rubber grommet for cycling carriage studs
83	75304	Washer—Stop washer for cam studs (.059" x .190" I.D. x 5/8" I.D.)
84	75334	Nut—Speed nut for cycling carriage studs
85	75335	Washer—Engagement washer for cycling carriage return stud
86	75336	Lever—Lockout lever complete with mounting pivot stud and washer
87	75337	Spring—Tension spring for lockout lever (2 turns)
88	75338	Spring—Friction stabilizing spring for cycling carriage complete with two (2) rivets
89	75339	Latch—Trip latch complete with mounting pivot stud and washer
90	75340	Lever—Manual lockout lever complete with mounting pivot stud and washer
91	75341	Switch—Power switch complete with cover
92	75342	Spring—Trip latch tension spring—2 turns
93	75343	Cam—Operating control cam complete with mounting pivot stud and washer

© John F. Rider

Compliments of www.nucow.com

MODELS 960284-1,
960284-2

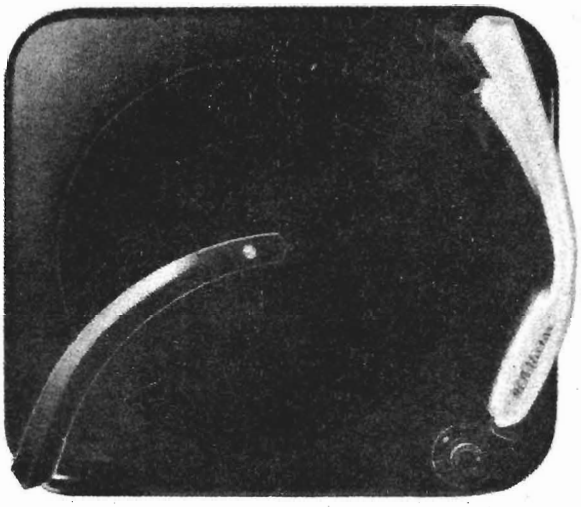

PH536

Mechanism may be used in the following instruments:

Radio Combinations—A108 .....960284-1, -2
—A91 .....960284-1, -2
Television Combinations—9T89 .....960284-1, -2
—6T87 .....960284-1, -2

The difference between 960284-1 and 960284-2 is in color. (See parts list.)

SPECIFICATIONS

Turntable speed .....78-33⅓ rpm
Record used .....10" or 12" (intermixed)
Record capacity .....Ten twelve-inch
.....Twelve ten-inch
.....Ten intermixed
Pickup force .....Eight to 10 grams
Stylus radius .....001 inch for 33⅓ rpm
.....003 inch for 78 rpm
Type pickup .....Crystal
Power supply .....105-125 volts, 60 cycles A-C

INDEX

	Page
Features	34
Operation	34
Function of Principal Levers	34-36
Cycle of Operation	37-41
Service Hints	41-43
Removing Stylus	43
Adjustments	44
Do You Know? (Service Hints)	44-45
Exploded View of Motor	47
Exploded View of Mechanism	46
Parts List	48-49
Lubrication	49

FEATURES

1. This record changer is a center support intermix mechanism designed to play automatically a series of records up to ten 12-inch, twelve 10-inch, or ten intermixed records of the standard 78 RPM type. It will also play a series of the long playing 33-1/3 RPM type of similar diameter.
2. The mechanism is equipped with a light weight dual stylus pickup cartridge. The proper stylus can be selected by turning a knob in the end of the pickup arm.

   After the last selection of the stack has been played, the pickup arm will go to the rest position and the mechanism will stop automatically.
4. The automatic tripping device is of the acceleration type.
5. The speed change is accomplished by a single control mounted on the motorboard.

AUTOMATIC OPERATION

1. Lift and rotate the record support to one side.
2. Place a stack of records over the center post.
3. Rotate the record support to a position so the center post will extend through the hole in the end of the support.
4. Turn the speed control to select the proper speed.
5. Rotate the knob in the end of the pickup arm to the proper numeral corresponding to the turntable speed.
6. Turn the function control knob to reject and release. The mechanism will play one side of each record of the stack until the last selection has been played at which time it will stop automatically.
7. To reject a record being played, turn the function control knob to reject and release.
8. To remove records, lift and turn the record support to one side.
9. Lift the stack of records straight up.

MANUAL OPERATION

1. Lift and rotate the record support to one side.
2. Place the record to be played on the turntable (tilt slightly to slide over the step in the centerpost).
3. Set the speed and pickup cartridge controls properly.
4. Turn function control to reject and release.
5. After the pickup sits on the record, place the record support over the centerpost, permitting it to rest on the step in the centerpost.
6. The mechanism will play the record after which it will stop automatically.

FUNCTION OF PRINCIPAL LEVERS

See Fig. 1

Reject rod (56)

The function of the reject rod is to transfer the action from the control knob to the reject lever.

Trip slide (98)

The function of the trip slide is to transfer the movement of the pickup arm lever to the lower trip pawl. This action starts the change cycle.

Cycling gear (96)

The function of the cycling gears is to transfer the rotating motion of the turntable to the cycling mechanism.

©John F. Rider

Compliments of www.nucow.com

MODELS 960284-1, 960284-2

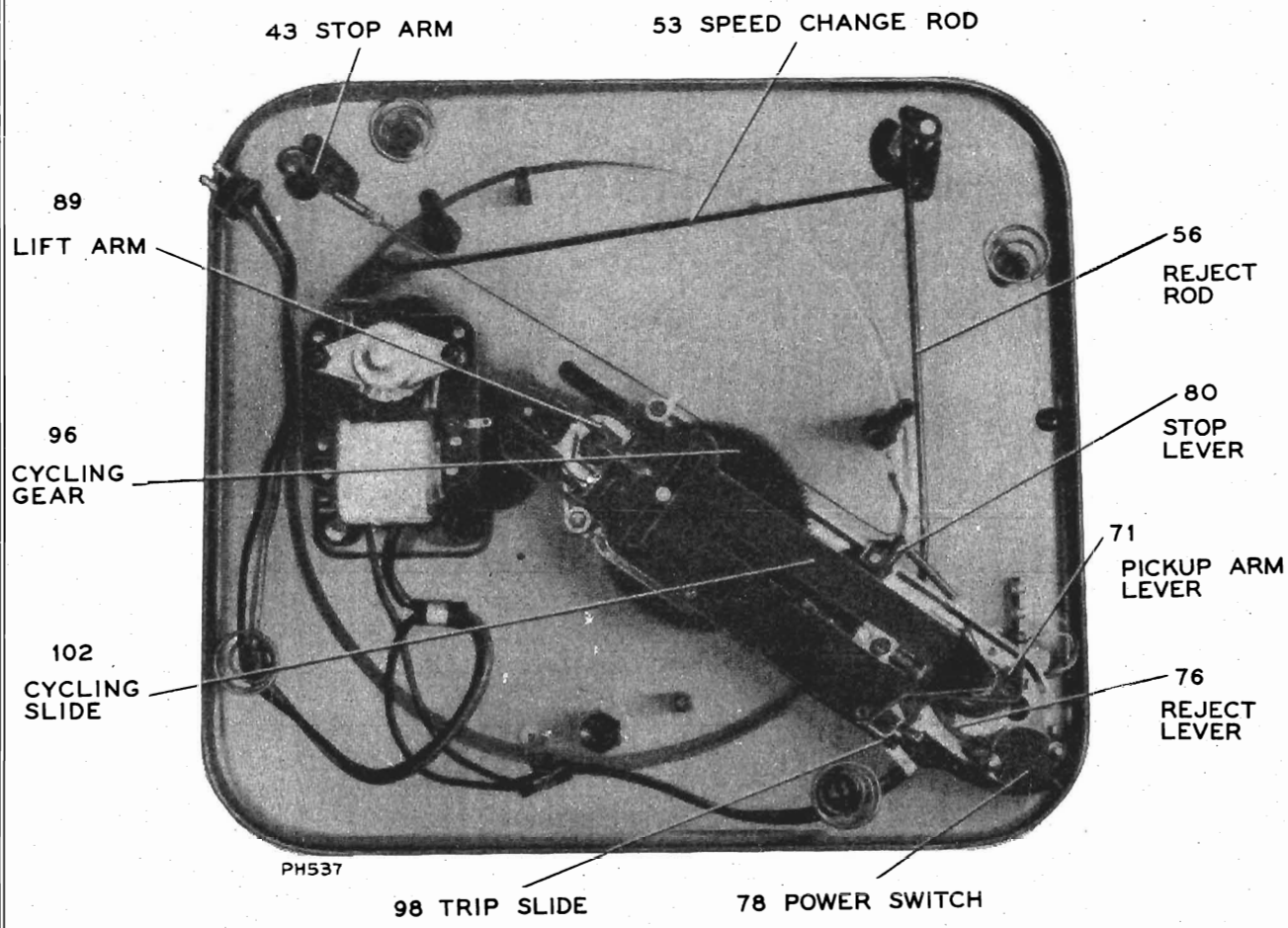

Fig. 1

Stop arm (43)

When the last record of the stack drops to the turntable, the record support arm drops. The lower end of the record support arm pivot actuates the stop lever thereby transferring the action for automatic stopping.

Lift arm (89)

The function of the lift arm is to transfer the movement of the cycling slide to the separator mechanism inside the centerpost.

Stop lever (80)

The function of the stop lever is to raise the trip slide and form a stop for pickup arm return lever. This results in the mechanism stopping automatically.

Cycling slide (102)

The function of the cycling slide is to transfer the action from the cycling gear to the other levers.

See Figs. 1 and 4

Pickup arm lever (71)

The function of the pickup arm lever is to transfer movement of the pickup arm to levers located beneath the motorboard. Other levers beneath the motorboard also counter react through the pickup arm lever thereby directing the movement of the pickup arm.

Reject lever (76)

The function of the reject lever is to actuate the power switch and trip slide.

See Fig. 2

Twelve-inch indexing lever (61)

After the completion of each change cycle of the mechanism, the pickup arm automatically is indexed for ten-inch records unless a twelve-inch record has dropped to the turntable. As a twelve-inch record drops to the turntable, it moves the twelve-inch indexing lever thereby directing the position of the selector lever.

See Fig. 3

Trip pawl (upper) (94)

The upper trip pawl functions as an actuating device for the cycling engagement pawl.

Cycling engagement pawl (96A)

The function of the cycling engagement pawl is to engage the off-set in the turntable shaft thereby starting change cycle.

See Fig. 4

Pickup arm return lever (68)

The function of the pickup arm return lever is to provide the force necessary to move the pickup into landing position.

Selector lever (83)

The function of the selector lever is to form a stop for the pickup arm return lever. The position of selector lever (up or down) determines whether the pickup lands on ten- or twelve-inch records.

Trip pawl (lower) (97)

The lower trip pawl transfers the action of the trip slide from the lower to the upper side of the cycling gear.

(See Exploded View—Fig. 6)

Record support (overarm) (1)

The function of the record support is to stabilize and hold the records in a horizontal plane which is parallel to the motorboard. After the last record of the stack drops to the turntable, the pivot of the record support drops down and actuates the automatic stopping device.

Center post (34)

The function of the center post is to support the stack of records. It also houses the separating mechanism.

©John F. Rider

Compliments of www.nucow.com

MODELS 960284-1,
960284-2

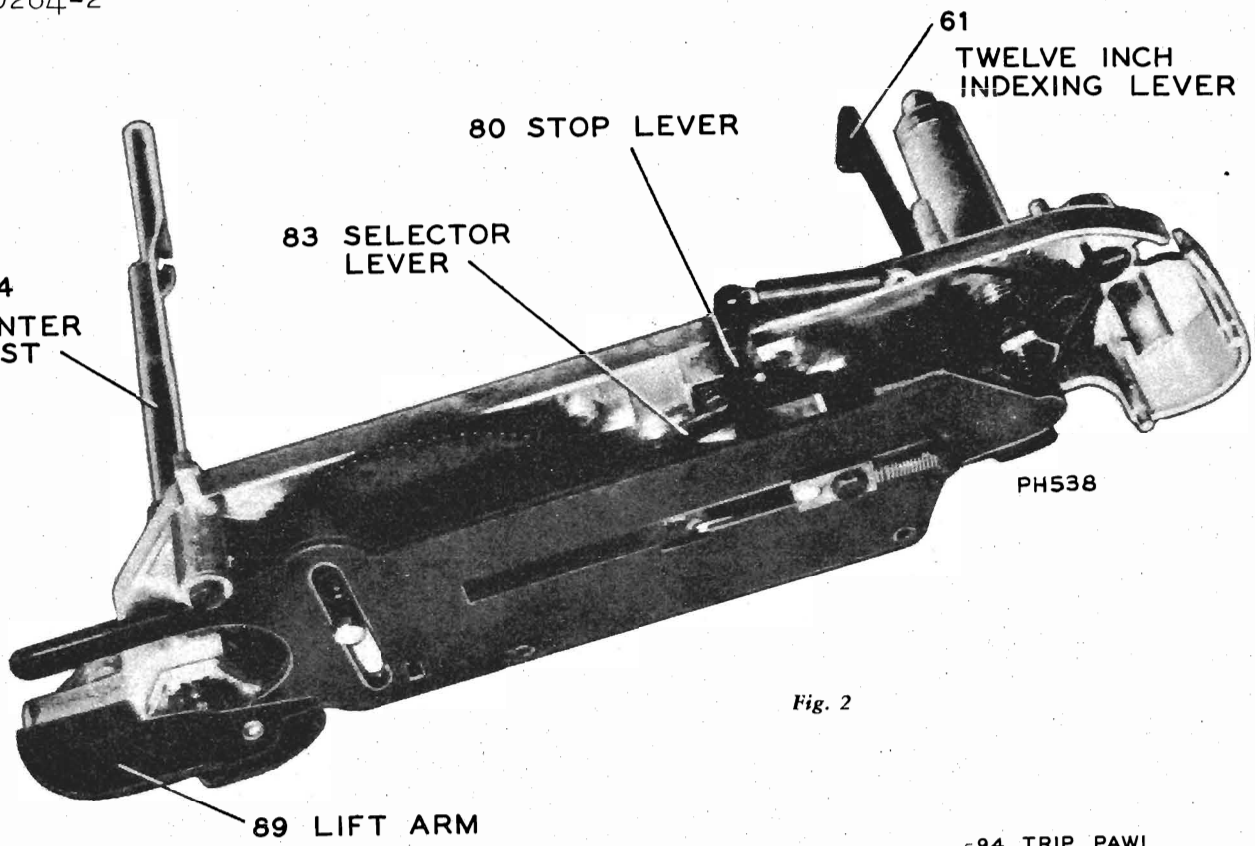

Fig. 2

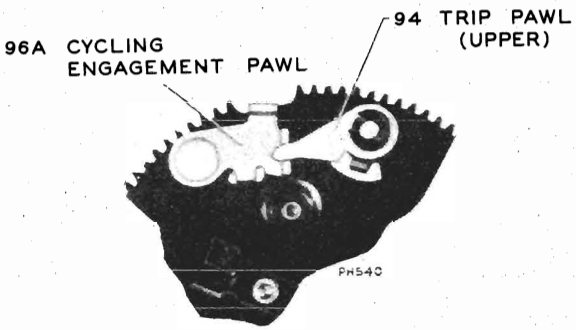

Fig. 3

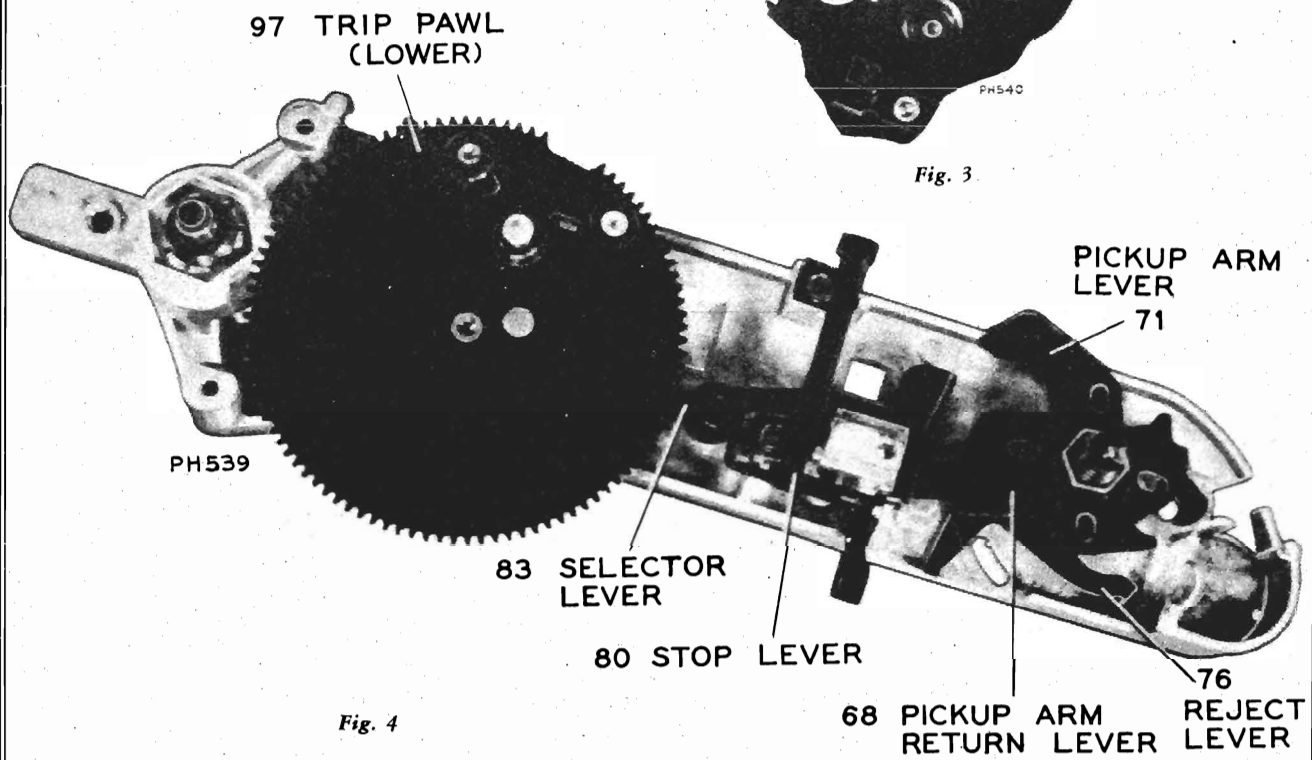

Fig. 4

©John F. Rider

Compliments of www.nucow.com

MODELS 960284-1, 960284-2

CYCLE OF OPERATION

NOTE: In the cycle of operation it is assumed the mechanism has stopped automatically (out of cycle) with the pickup arm on the rest.

Function	Description
Place a stack of records over the center post (intermixed if so desired). Place the record support over the center post.	1. The stack of records rests on the step in the centerpost (34). 2. The hole in the end of the record support (1) permits the end of the support to slide over the center post and rest on the stack of records. 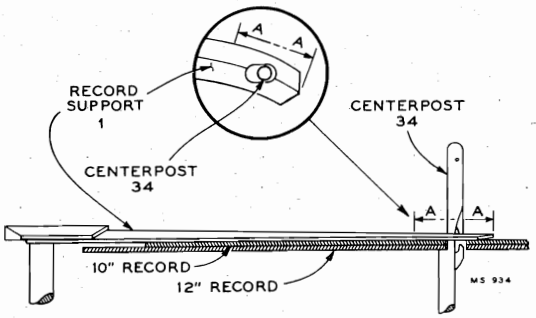
Turn the speed selector knob to 78 or 33-1/3 rpm position.	1. The speed change is accomplished by shifting to either of two shafts on the motor assembly which are rotating at different speeds. The additional shaft is connected by a small rubber belt. 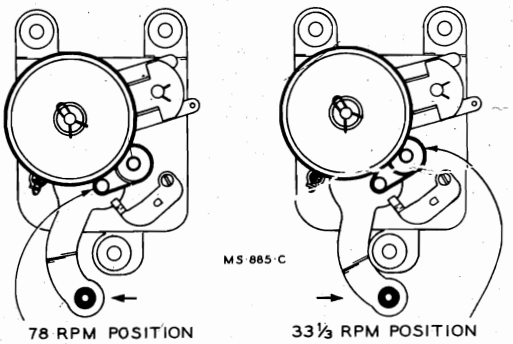
Rotate the knobs to select the proper stylus.	1. The rotation of the stylus knob (3) selects the proper stylus depending on the type of record to be played. 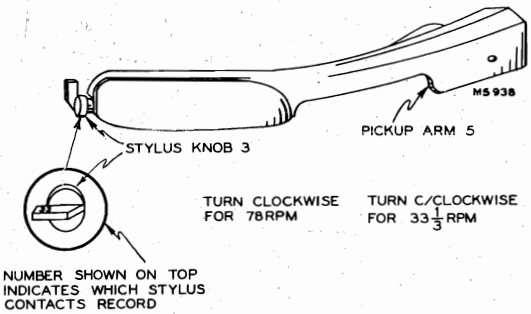
Rotate function control knob to reject position and release.	1. The function control knob, through the linkage of the function control arm (55), reject rod (56), and reject lever (76) actuates the power switch and the trip slide (98). 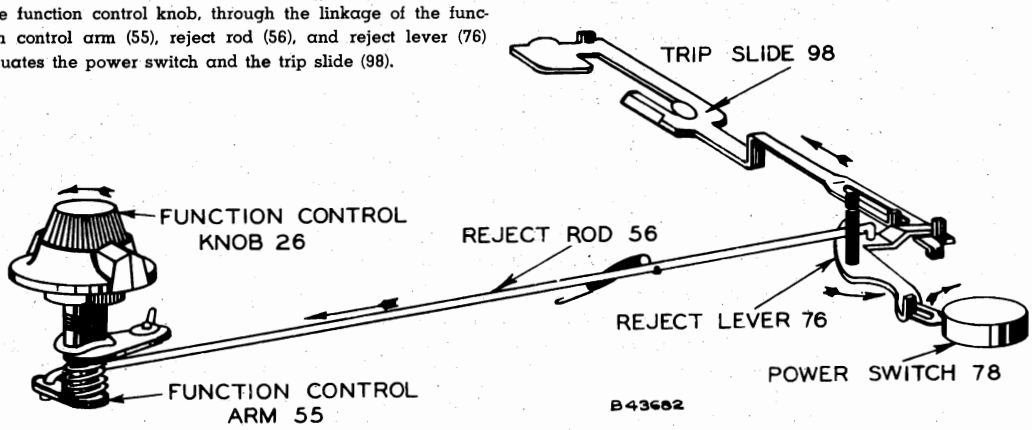

© John F. Rider

Compliments of www.nucow.com

MODELS 960284-1,
960284-2

Cycling starts.

1. The closing of the power switch starts the turntable rotating.
2. The trip slide (98) in its movement contacts the lower trip pawl (97) and moves both the lower and the upper trip pawls which are tied together. The movement of the upper trip pawl (94) actuates the cycling engagement pawl (96A) sufficiently to cause engagement with the off-set on the rotating turntable shaft.
3. The contact between the cycling engagement pawl (96A) and the off-set on the turntable shaft gives the necessary push for the teeth in the cycling gear (96) to engage the teeth in the shaft of the turntable thereby starting change cycle.

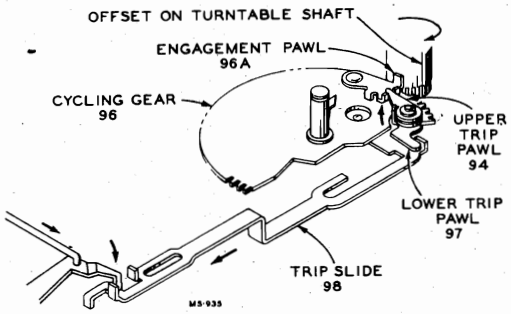

Pickup rises and remains outside turntable area.

1. As the cycling gear rotates, the stud (96B) mounted on the underside of the gear, rides inside a slot cut in the cycling slide (102).
2. The rotation of the cycling gear pushes the cycling slide back and forth.
3. As the slide moves away from the center post, an incline formed on the end of the slide causes the elevating rod (24) to raise and lift the pickup arm.
4. At the same time the elevating rod is pushed upward, the pickup arm lever (71) is also carried along from the force transferred through the spring (73). The raising of the pickup arm lever causes the two dimples formed in the pickup arm lever to engage the two holes in the pickup arm return lever (68) and couple them together. This stabilizes and directs the movement of the pickup arm during change cycle.
5. The cycling slide continues to move away from the center post until the formed end of the slide pushes against the pickup arm return lever. This relieves the force of pickup arm return lever against stop lever (80). This permits the stop lever return spring (85) to expand and return the stop lever to normal position.
6. The end (80A) of stop lever (80) pushes trip slide back ready for the next change cycle.

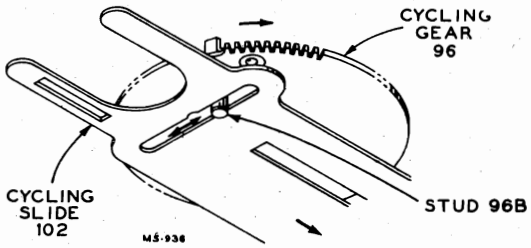

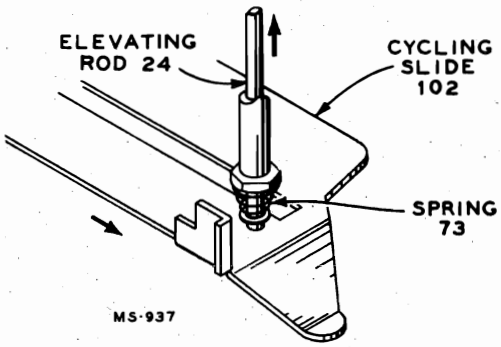

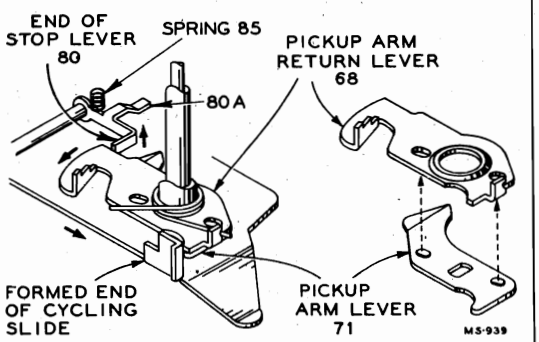

Record drops to turntable.

1. Further movement of the cycling slide causes the slot in the end of the cycling slide to actuate the lift arm (89).
2. The lift arm pushes up on the shaft extending from the bottom end of the center post. This shaft actuates the push off mechanism inside the center post, and the record drops to the turntable.

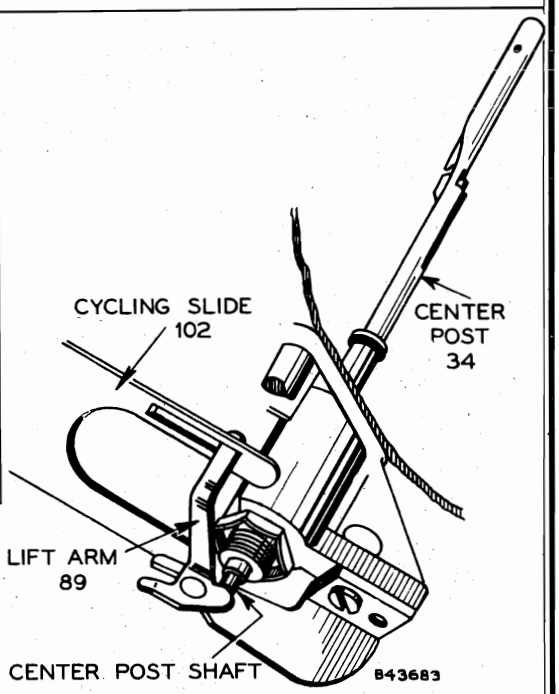

©John F. Rider

Compliments of www.nucow.com

MODELS 960284-1, 960284-2

3. At this time the tab (96C) on cycling gear pushes down on one end of the selector lever (83) (which is pivoted in the center) thereby raising the other end causing it to latch on the edge (61A) of the twelve-inch indexing lever (61).

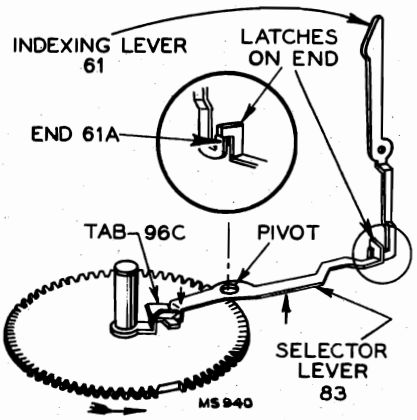

The pickup moves in for landing.

1. As the cycling slide returns, the formed edge (102A) on the slide moves back permitting the pickup arm return lever spring (66) to expand. This causes the pickup arm return lever (68) to move the pickup inward until the pickup arm return lever comes against the selector lever (83). The pickup is now directly above the point of landing.

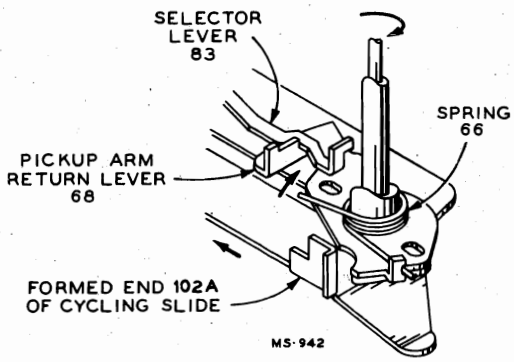

Pickup sits on record.

1. The elevating rod (24) slides down the incline on the slide permitting the pickup to sit on the start of the record.

NOTE:—12" indexing.
The mechanism automatically is indexed for the pickup to land on a ten-inch record, each time the mechanism goes through change cycle, unless a twelve-inch record contacts indexing lever (61) as its drops to the turntable. On each revolution of the cycling gear (complete change cycle) the tab (96C) pushes down on the selector lever (83) and the other end of the selector lever latches on the top edge (61A) of the twelve-inch indexing lever. Under these conditions the pickup will land correctly on a ten-inch record. On the other hand if a twelve-inch record drops to the turntable, it strikes the indexing lever on the way down. This permits the end of the selector lever (83) to drop down further into the recess (61B). The lower step of the pickup arm return lever makes contact with the selector lever and the pickup will land correctly on a twelve-inch record.

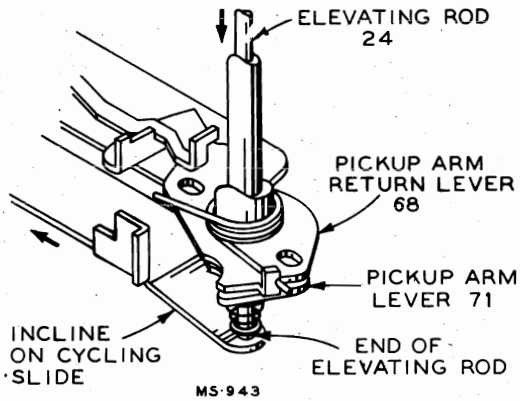

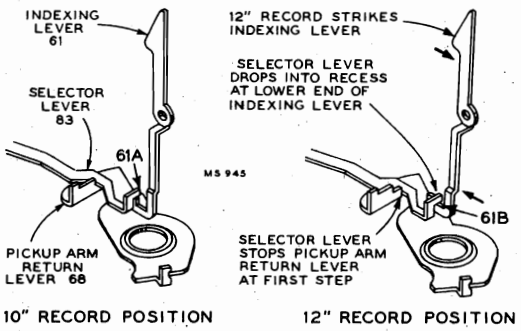

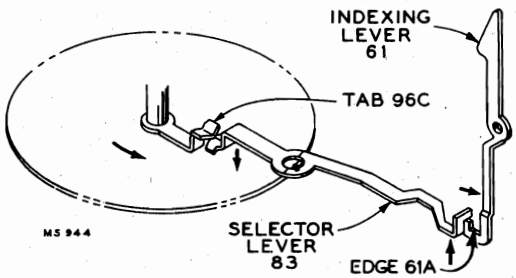

©John F. Rider

Compliments of www.nucow.com

MODELS 960284-1,
960284-2

Mechanism completes cycle.

1. Just before the cycling gear completes cycle, a small tab (102D) on cycling slide makes contact with lower trip pawl (97) thereby moving upper trip pawl (94) and cycling engagement pawl (96A) back. This prevents the re-engagement with the off-set on the turntable shaft which would start a new change cycle.
2. The cycling gear comes to rest as the stud sliding in the cycling slide drops into a small indentation (102B) in the slide. The cut away section of the gear is in position so the gear on the turntable shaft is free to rotate.

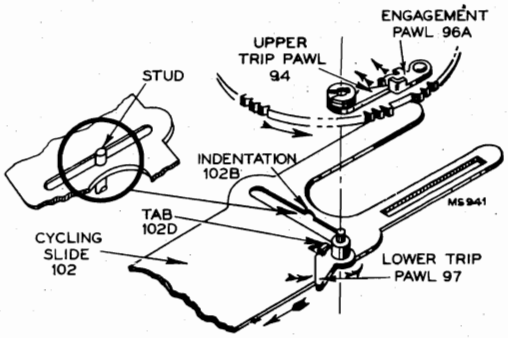

Record plays.

1. As the record plays, the pickup moves in toward the center of the record carrying the trip slide along. This is due to the contact made with the pickup arm lever which is rotating with the pickup arm pivot.
2. The trip slide contacts the lower trip pawl and both the lower and upper trip pawls and the cycling engagement pawls move slightly with each revolution of the record. This slight movement of the pawls is reversed each time the off-set on the turntable shaft comes in contact with the cycling engagement pawl. The back movement is taken up in the friction connection between the upper and lower trip pawls.
3. This action continues as long as the pickup moves in at a constant rate of speed. When the stylus leaves the recorded section of the record, the rapid acceleration results in the rapid movement of the cycling engagement pawl. The cycling engagement pawl assumes such a position that the off-set on the turntable shaft makes a positive contact and the cycling cam is pushed sufficiently for engagement between the teeth of the cycling gear and the teeth in the turntable shaft. This starts change cycle.

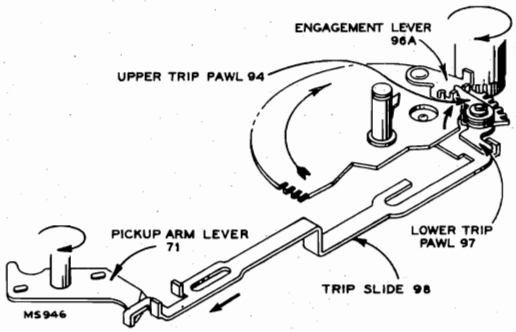

Pickup raises and moves out.

1. After the mechanism has been tripped the pickup arm moves out from action of the cycling slide (102) on the pickup arm lever (71).
2. The mechanism again follows the preceding sequence of dropping and playing the records until the last record of the stack has been played.

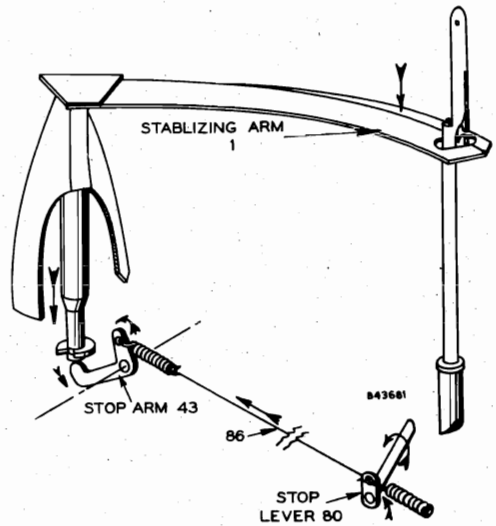

Mechanism stops automatically.

1. After the last selection has been played and the mechanism again goes into change cycle, the record support drops and actuates stop arm (43).
2. The stop arm movement is transferred through a connecting wire (86) to stop lever (80) causing it to raise.
3. As the stop lever raises the end (80A) lifts one end of trip slide. The other end (80C) of stop lever rises and forms a stop for pickup arm return lever preventing the pickup from moving in for landing.
4. The cycling slide has moved away from the center post permitting the lower end (80B) of stop lever to drop down through a small square cut in the cycling slide. After the end of the stop lever drops through the square opening, it slides along a channel cut in the slide which prevents it from raising until the slide returns.

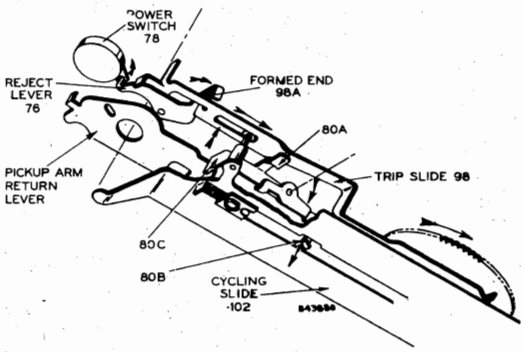

© John F. Rider

Compliments of www.nucow.com

MODELS 960284-1, 960284-2

5. As the cycling slide moves back, it carries the raised trip slide along until finally the formed end (98A) of the trip slide (98) pushes reject lever which in turn actuates the power switch (78). This removes the power from the drive motor and mechanism stops.
6. The elevating rod (24) lowers the pickup arm to the rest.
7. As the cycling gear comes to rest, a small tab (102C) on cycling slide contacts and moves lower and upper trip pawls and cycling engagement pawl back to prevent engagement with off-set on turntable shaft. This prevents starting a change cycle if power would be applied to drive motor.

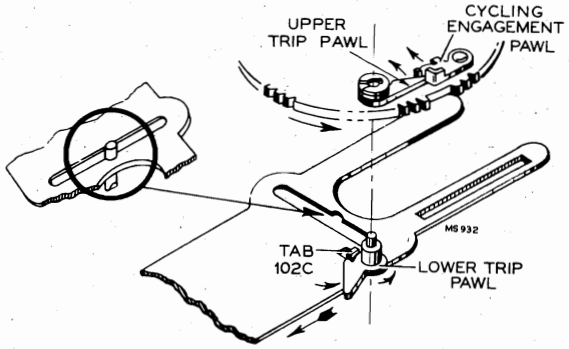

SERVICE HINTS

Pickup Arm Strikes Record on Center Post

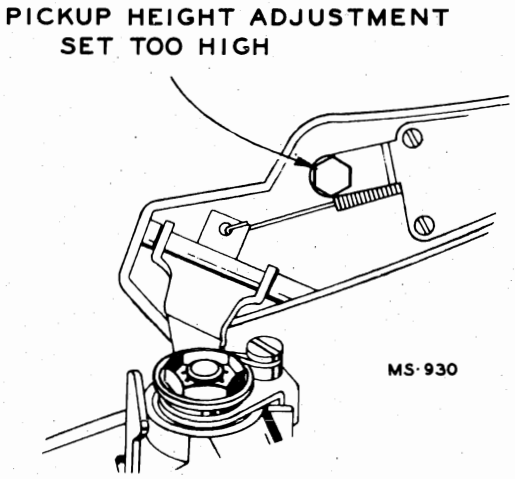

Speed Change Control Fails to Function

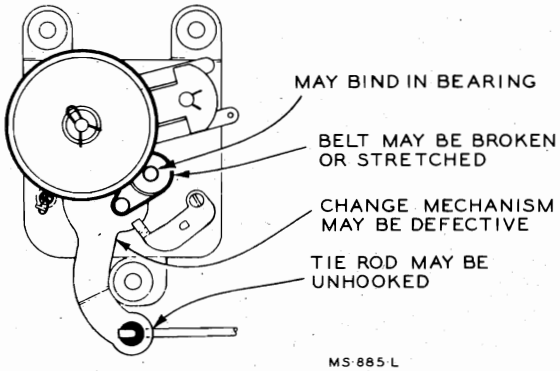

Pickup Skips Grooves

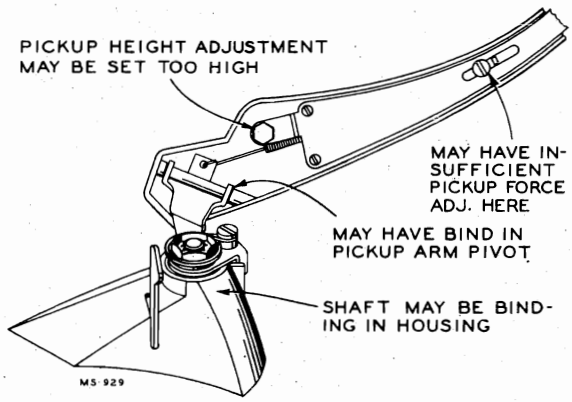

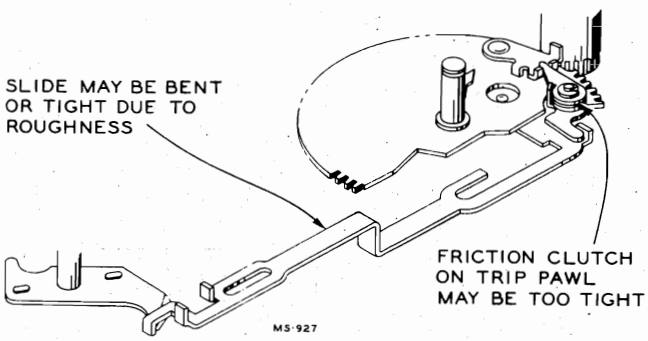

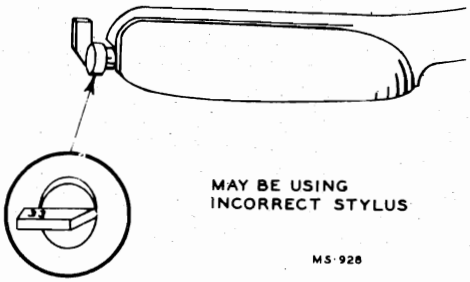

"Wow" or Speed Variation

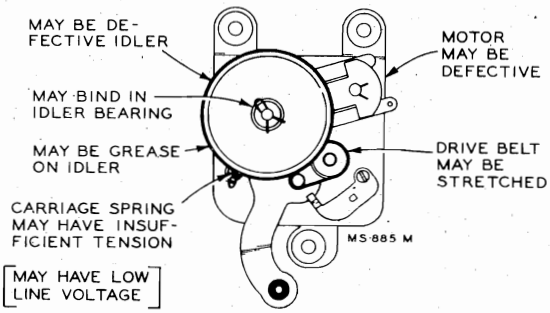

©John F. Rider

Compliments of www.nucow.com

MODELS 960284-1,
960284-2

Mechanism Fails to Trip

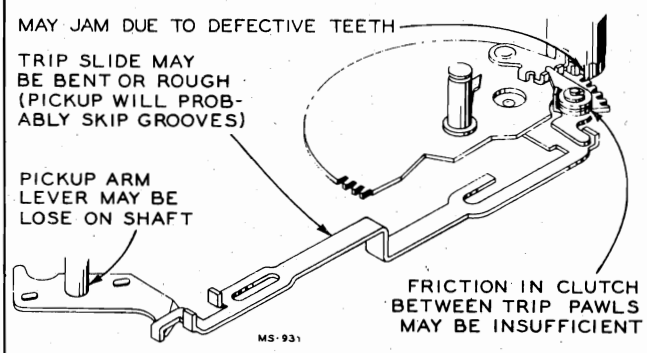

Premature Tripping

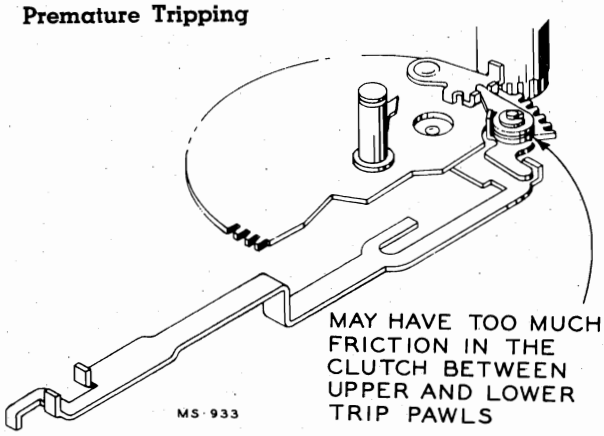

Pickup Sets Down on Rest Instead of Record

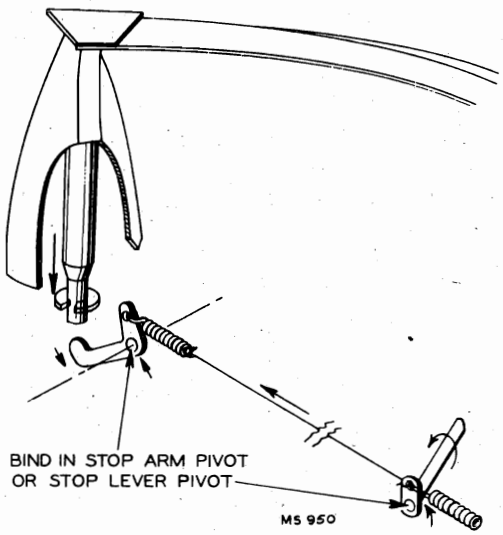

Mechanism Fails to Stop Automatically

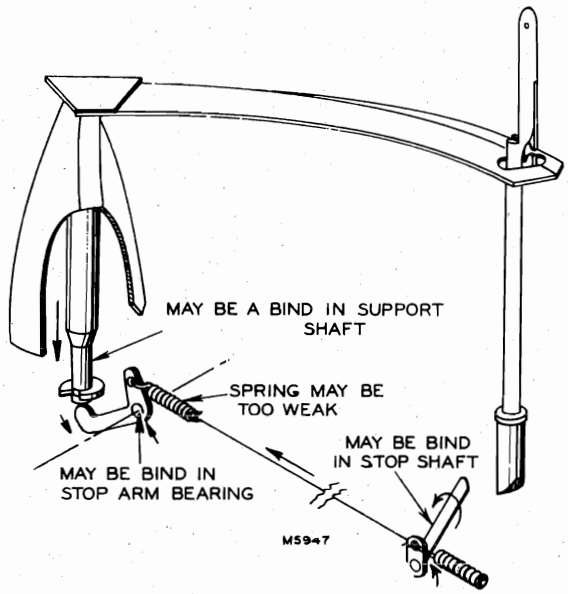

Mechanism Trips Continuously

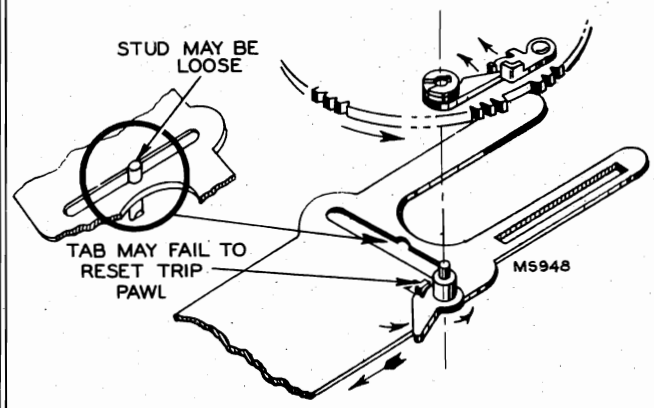

Failure to Separate Records Properly

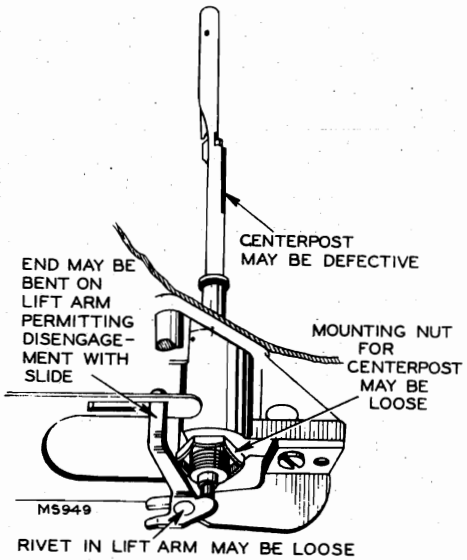

©John F. Rider

Compliments of www.nucow.com

MODELS 960284-1, 960284-2

Reject Control Fails to Function

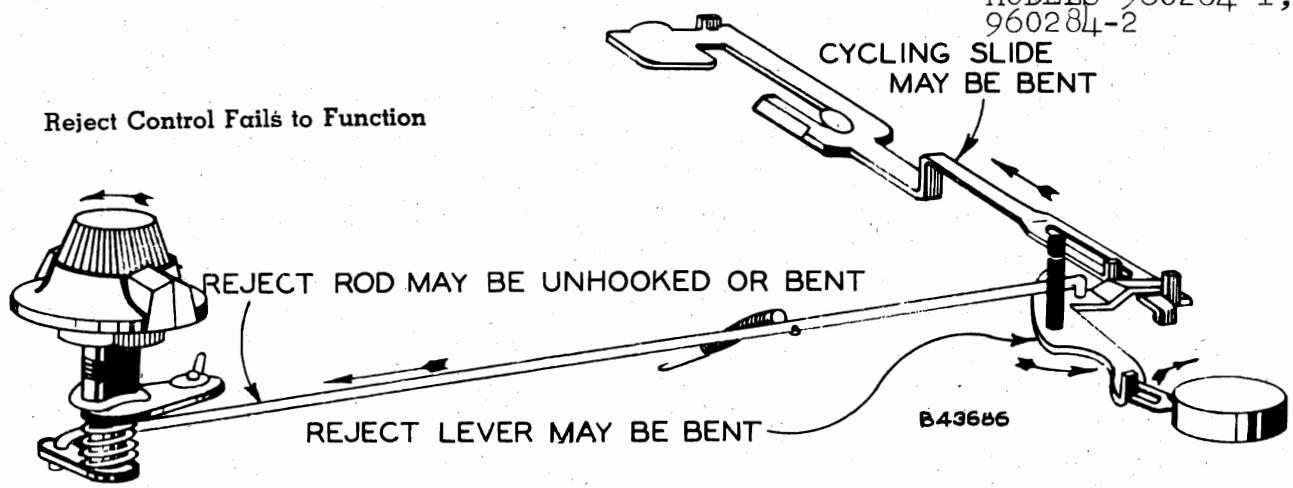

Pickup Fails to Land Properly

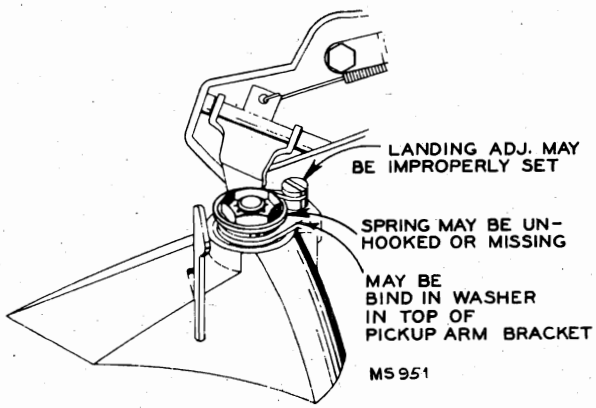

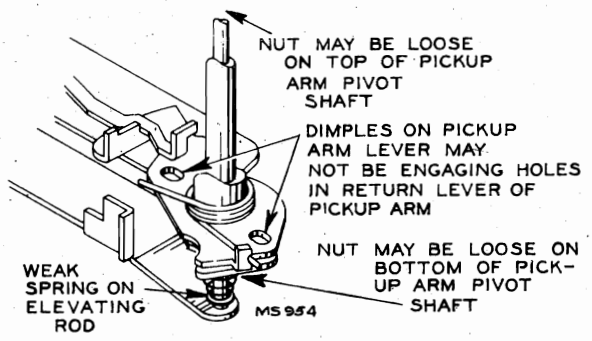

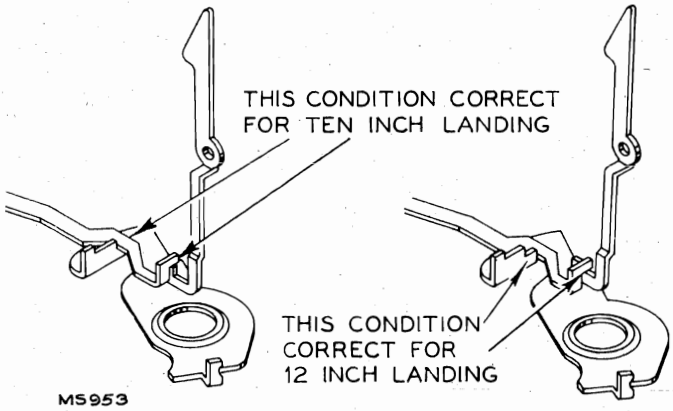

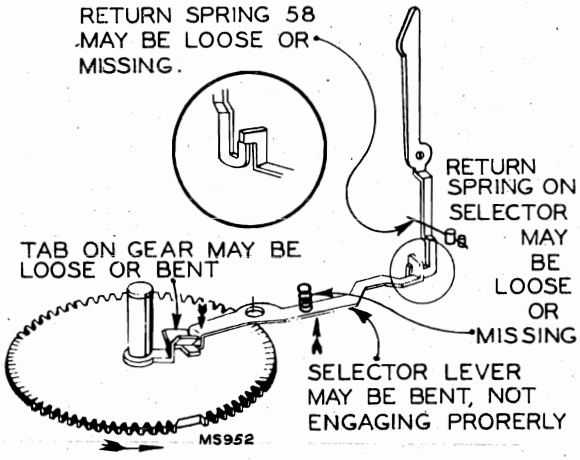

Distorted or No Output

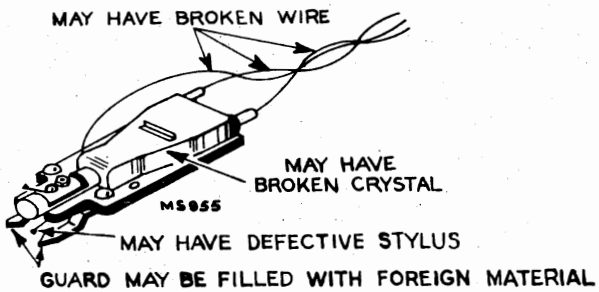

Removing Stylus

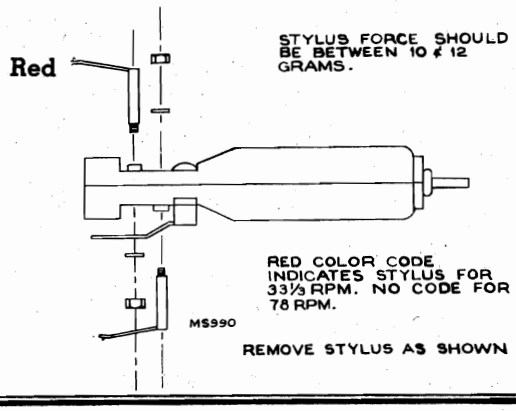

©John F. Rider

Compliments of www.nucow.com

MODELS 960284-1,
960284-2

ADJUSTMENTS

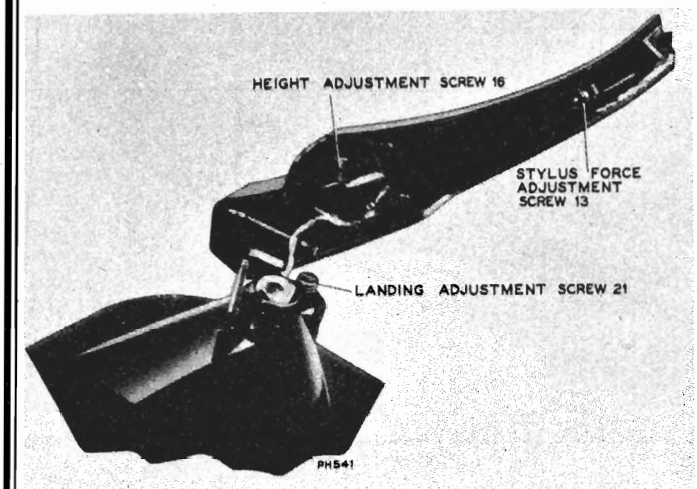

Landing Position—The landing position of the stylus is adjusted by means of the landing adjustment screw (21) mounted on the pickup arm support bracket assembly. Turn the screw for correct landing on 10″ records and the 12″ adjustment should automatically be correct.

Pickup Arm Height—The pickup arm height is adjusted by screw (16) located inside the pickup arm. To raise pickup arm turn screw counterclockwise to lower arm turn screw clockwise. The pickup arm height should be adjusted so that with a 1⅛″ stack of records the pickup arm lifts ¼″ straight up as the change cycle starts.

Stylus Force—Stylus force should be ten to twelve grams. Loosen screw (13) and move slide back and forth until the correct stylus force is obtained.

DO YOU KNOW?

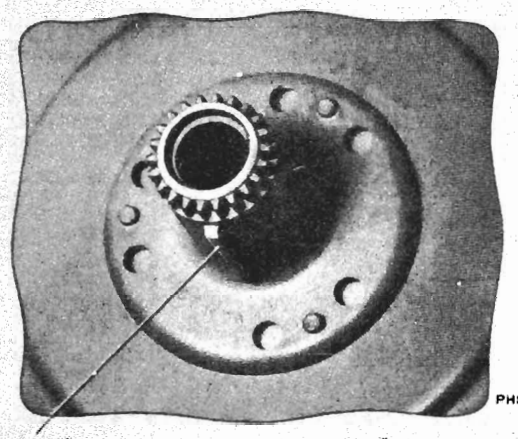

THE "OFFSET" CONTACTS ENGAGEMENT PAWL #96A CAUSING THE GEARS OF THE TURNTABLE SHAFT AND CYCLING CAM TO ENGAGE AND CARRY THE MECHANISM THROUGH CYCLE

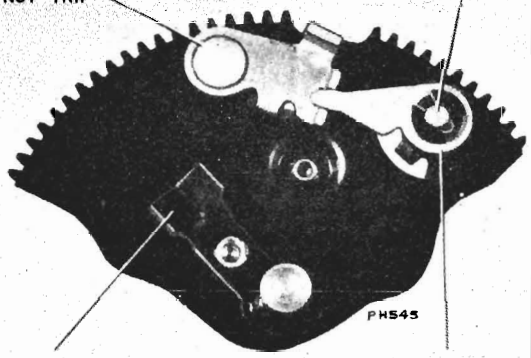

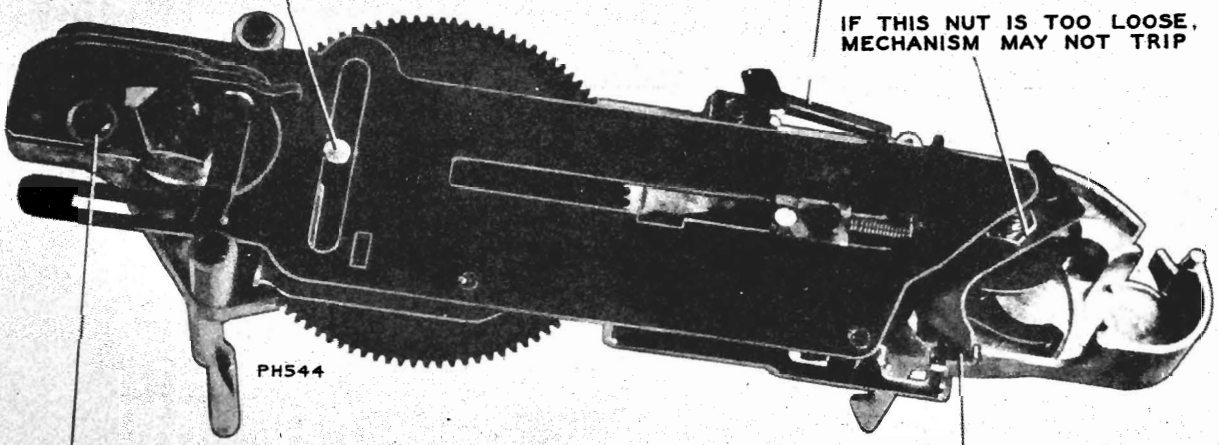

©John F. Rider

Compliments of www.nucow.com

MODELS 960284-1, 960284-2

DO YOU KNOW?

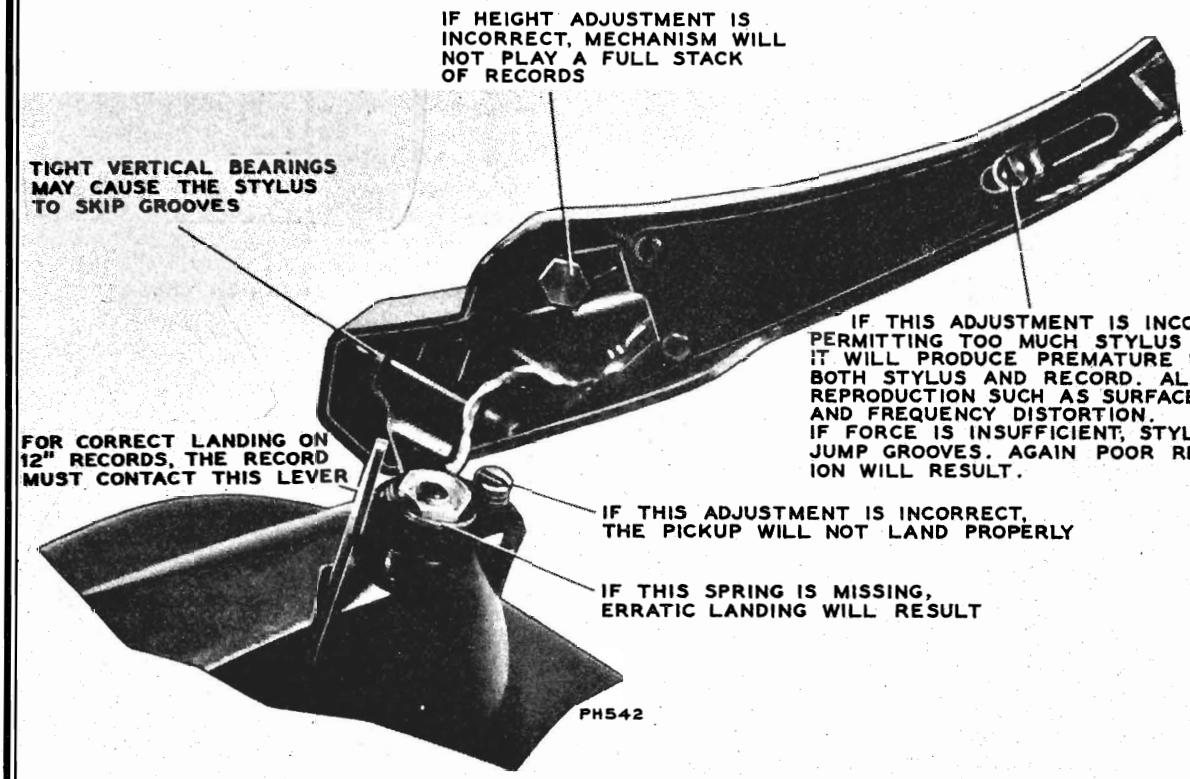

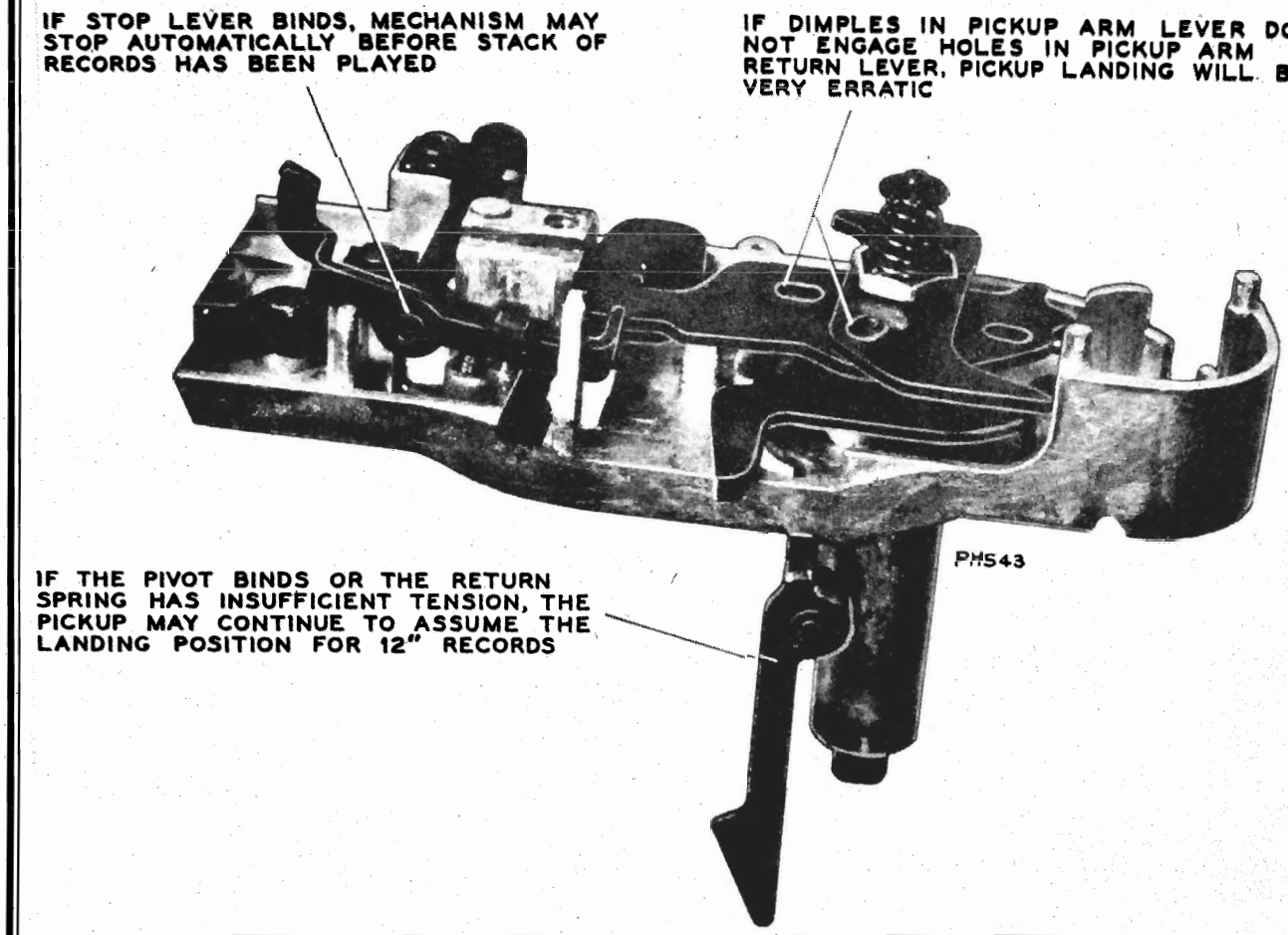

©John F. Rider

Compliments of www.nucow.com

MODELS 960284-1,
960284-2

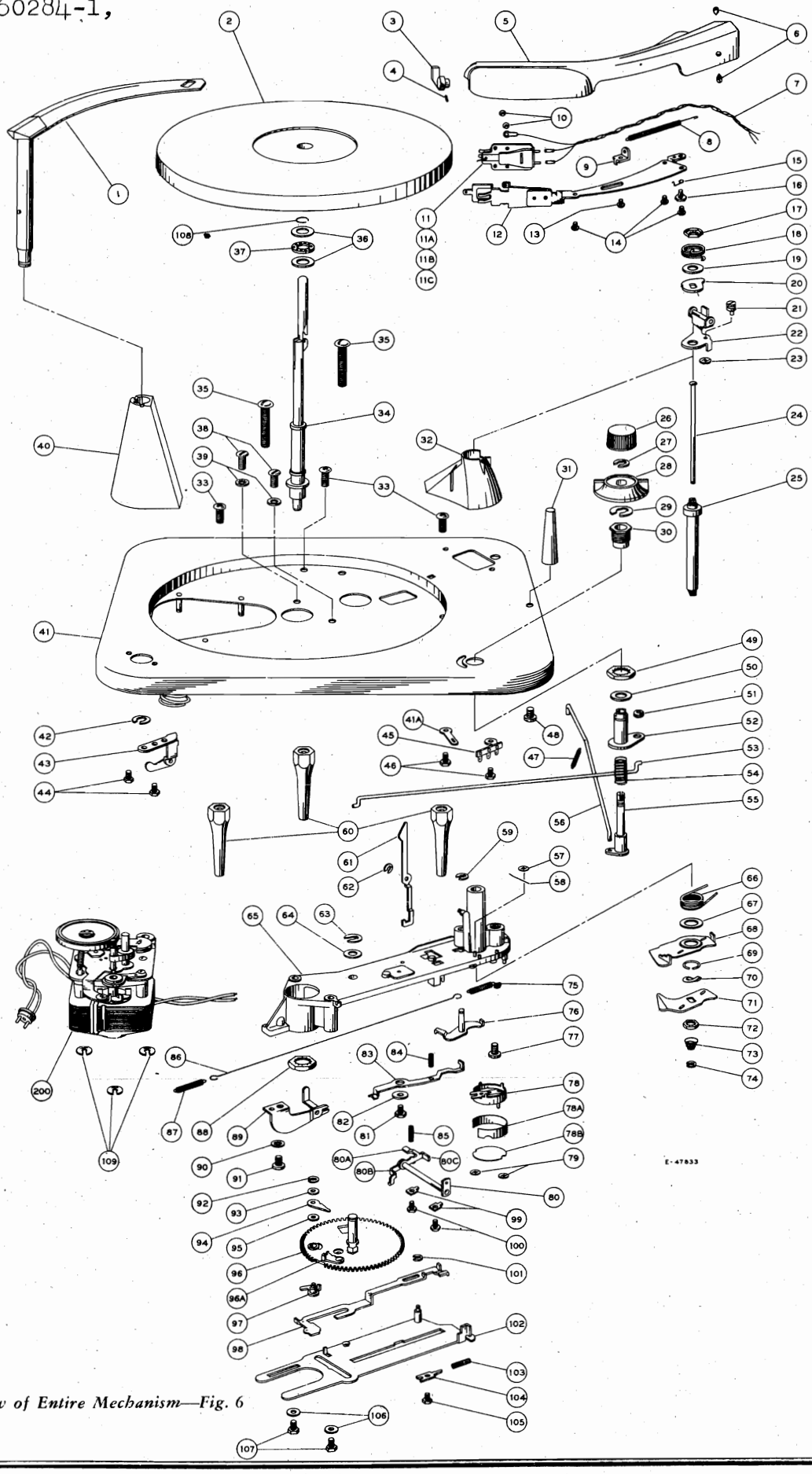

Exploded View of Entire Mechanism—Fig. 6

©John F. Rider

Compliments of www.nucow.com

MODELS 960284-1, 960284-2

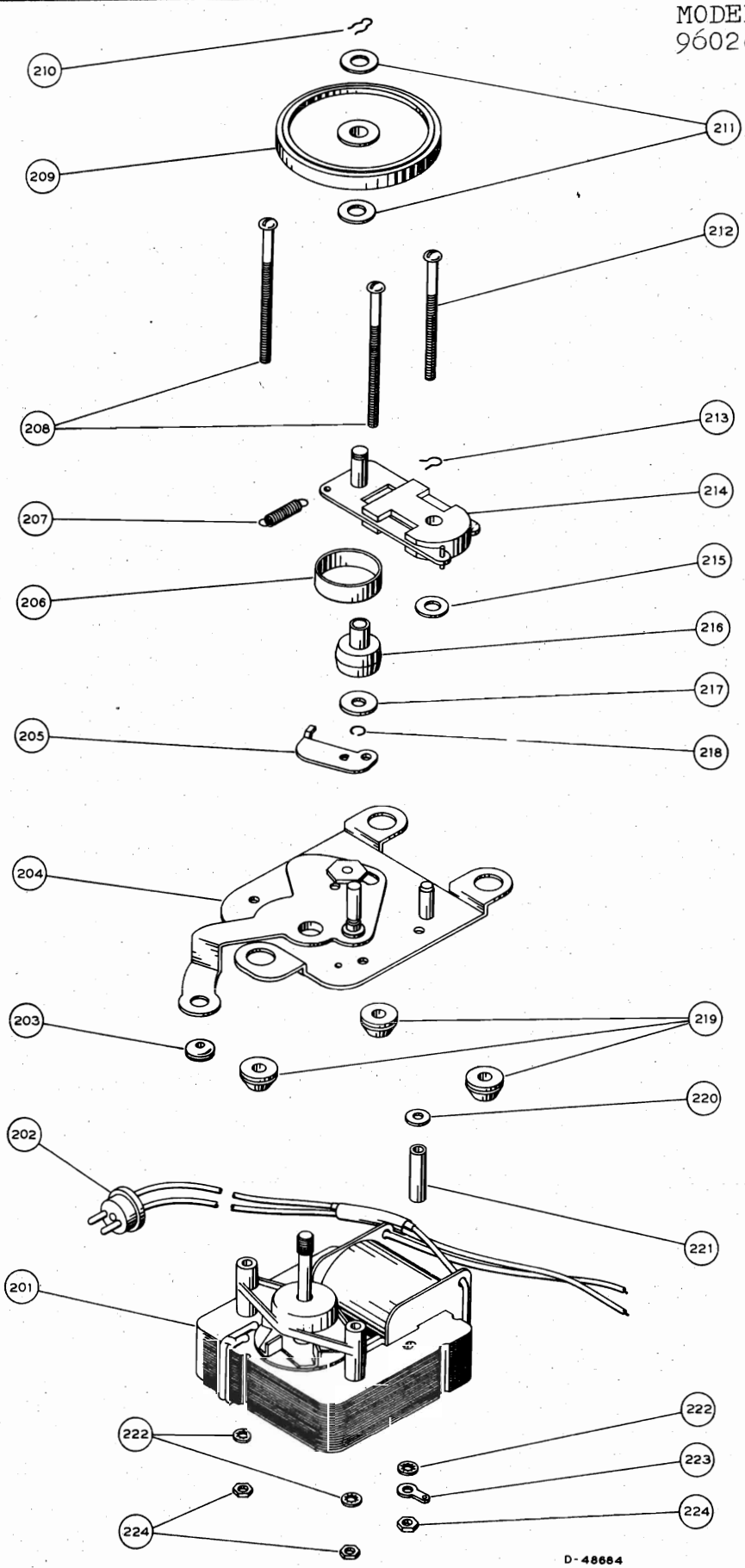

Exploded View of Motor (60 cycles)—Fig. 5

©John F. Rider

Compliments of www.nucow.com

MODELS 960284-1, 960284-2

REPLACEMENT PARTS

ILL. NO.	STOCK NO.	DESCRIPTION
1	75802	Support—Record support complete with plastic cap (maroon) and pin for 960284-1
1	75803	Support—Record support complete with plastic cap (tan) and pin for 960284-2
1A	75804	Cap—Plastic cap (maroon) for record support assembly for 960284-1
1A	75805	Cap—Plastic cap (tan) for record support assembly for 960284-2
2	75806	Turntable—Turntable and hub assembly
3	75264	Knob—Stylus selector knob complete with screw Ill. #4
4	——	Screw—Screw for stylus selector knob (included in 75264, Ill. #3)
5	75807	Arm—Pickup arm shell only complete with "RCA Victor" emblem
6	75357	Pivot—Pickup arm pivot (2 required)
7	75808	Cable—Three (3) wire pickup cable complete with connectors
8	75809	Spring—Pickup arm counterbalance spring (coil type)
9	75810	Bracket—Adjustment bracket for counterbalance spring
10	——	Screw—Mounting screw for crystal
11	75475	Crystal—Two-way (33⅓/78 RPM crystal complete with styluses
11A	75497	Stylus—Osmium tip stylus for 78 RPM section (not coded)
11B	75496	Stylus—Osmium tip stylus for 33⅓ RPM section (coded "red")
11C	74230	Nut—#00-112 nut and washer to mount stylus
12	75811	Mount—Crystal mount and swivel assembly
13	——	Screw—#6-32 x ⅛" round head machine screw to mount counterbalance spring adjustment bracket
14	71097	Screw—#4 x ¼" self tapping screw for crystal mount and swivel assembly
15	75812	Spring—Lock spring (coil type) for height adjustment screw
16	75813	Screw—Height adjustment screw (hex head)
17	——	Nut—Pal nut for mounting pickup arm bracket
18	75814	Spring—Tension spring (coil type) for landing adjustment stud
19	——	Washer—Metal (steel) washer for pickup arm pivot shaft (1/16" x ¼" I.D. x ½" O.D.)
20	75815	Cam—Landing adjustment cam
21	75816	Stud—Landing adjustment stud (eccentric)
22	75817	Bracket—Pickup arm mounting bracket complete with pin
23	75818	Nut—Speed nut for landing adjustment stud
24	75819	Rod—Elevating rod
25	75820	Shaft—Pickup arm pivot shaft and sleeve
26	75821	Knob—Function control knob (maroon) for 960284-1
26	75822	Knob—Function control knob (tan) for 960284-2
27	75399	Washer—"C" washer to mount function control arm and shaft assembly
28	75823	Knob—Motor speed control knob (maroon) for 960284-1
28	75824	Knob—Motor speed control knob (tan) for 960284-2
29	75825	Washer—"C" washer to mount motor control arm and shaft assembly
30	75826	Bushing—Threaded bushing for control shaft
31	75827	Rest—Pickup arm rest (maroon) for 960284-1
31	75828	Rest—Pickup arm rest (tan) for 960284-2
32	75829	Housing—Pickup arm pivot shaft housing (plum hammertone) (die-cast) for 960284-1
32	75873	Housing—Pickup arm pivot shaft housing (light brown) (die-cast) for 960284-2
33	75830	Screw—#10 x ½ self-tapping cross-recessed head screw to mount plastic legs
34	75831	Spindle—Turntable spindle assembly
35	75377	Screw—Motorboard mounting screw (¼-20 x 1⅜" round head—special)
36	75354	Washer—Thrust washer for turntable bearing (2 required)
37	75355	Bearing—Thrust bearing
38	——	Screw—#10-24 x 5/16" pan head machine screw to mount die-cast sub-assembly
39	——	Lockwasher—#10 internal tooth lockwasher to mount die-cast sub-assembly
40	75832	Housing—Record support housing (plum hammertone) (die-cast) for 960284-1
40	75874	Housing—Record support housing (light brown) (die-cast) for 960284-2
41	——	Board—Motorboard (plum hammertone) complete with mounting springs, cable clamps and motor mounting studs for 960284-1
41	——	Board—Motorboard (light brown) complete with mounting springs, cable clamps and motor mounting studs for 960284-2
41A	——	Lug—Terminal lug
42	75385	Washer—"C" washer for record support shaft
43	75834	Arm—Stop arm assembly
44	——	Screw—#6 x 5/16" hex head self-tapping screw to mount record support housing and stop arm
45	——	Board—Terminal board (3 contact)
46	——	Screw—#6-32 x ¼" hex head self-tapping screw to mount terminal board and pickup arm pivot housing
47	75401	Spring—Reject rod return spring (coil type)
48	75830	Screw—#10 x ½" self-tapping cross-recessed head screw to mount arm rest
49	——	Nut—Pal nut to mount threaded bushing Ill. #30
50	75835	Washer—Bronze washer for control shaft
51	75403	Grommet—Rubber grommet for motor speed control rod
52	75836	Arm—Motor speed control arm and shaft assembly
53	75837	Rod—Motor speed control rod
54	75838	Spring—Compression spring for control lever shaft (coil type)
55	75839	Arm—Function control arm and shaft assembly
56	75840	Rod—Reject rod
57	75841	Nut—Speed nut for 12" indexing lever return spring
58	75842	Spring—12" indexing lever return spring (formed)
59	75392	Washer—"C" washer for mounting reject lever
60	75843	Leg—Plastic leg
61	75844	Lever—12" indexing lever
62	75397	Washer—"C" washer for mounting 12" indexing lever
63	75373	Washer—"C" washer for mounting cycling gear
64	75845	Washer—Fibre washer for mounting cycling gear
65	75846	Casting—Main casting
66	75847	Spring—Pickup arm return lever spring (coil type)
67	75848	Washer—Fiber washer for pickup arm pivot shaft
68	75849	Lever—Pickup arm return lever
69	75850	Retainer—Retainer ring for pickup arm return lever
70	75851	Washer—Spring washer for pickup arm pivot shaft
71	75852	Lever—Pickup arm lever
72	——	Nut—Pal nut to fasten pickup arm lever
73	75854	Spring—Thrust spring (coil type) for elevating rod
74	75397	Washer—"C" washer for elevating rod
75	75855	Spring—Return spring (coil type) for stop lever
76	75856	Lever—Reject lever
77	——	Screw—#10-24 x 5/16" round head machine screw and lockwasher
78	75857	Switch—"On-Off" switch complete with insulating strip and cover
79	75841	Nut—Speed nut for fastening switch cover

©John F. Rider

Compliments of www.nucow.com

MODELS 960284-1, 960284-2

REPLACEMENT PARTS

ILL. NO.	STOCK NO.	DESCRIPTION
80	75858	Lever—Stop lever assembly (including 80A, B, C)
81	——	Screw—#6-32 x ¼" hex head screw for selector lever
82	——	Washer—Flat washer (steel) for mounting selector lever
83	75859	Lever—Selector lever
84	75860	Spring—Return spring (coil type) for selector lever
85	75861	Spring—Return spring (coil type) for stop lever
86	75862	Link—Control link
87	75863	Spring—Return spring (coil type) for stop arm
88	——	Nut—Pal nut for spindle
89	75864	Arm—Lift arm
90	——	Lockwasher—Internal teeth lockwasher (#10) for lift arm mounting screw
91	——	Screw—#10-24 x 5/16" round head machine screw for lift arm
92	75397	Washer—"C" washer for mounting trip pawl
93	75396	Washer—Fibre washer for trip pawl shaft
94	75865	Pawl—Trip pawl—upper
95	75395	Washer—Spring washer for trip pawl shaft
96	75866	Gear—Cycling gear complete with shaft and engagement lever
96A	——	Lever—Engagement lever—part of Ill. 96
97	75867	Pawl—Trip pawl—lower
98	75868	Slide—Trip slide
99	75869	Strip—Bearing strip for stop lever shaft
100	——	Screw—#4-40 x ¼" hex head screw for mounting stop lever shaft bearing strips
101	75397	Washer—"C" washer for mounting trip slide
102	75870	Slide—Cycling slide and cam assembly
103	75871	Spring—Stabilizing spring (coil type) for cycling slide
104	75872	Plate—Bearing plate for cycling slide
105	——	Screw—#6-32 x ½" hex head machine screw for mounting cycling slide bearing plate
106	——	Washer—Brass washer for cycling slide
107	——	Screw—#6-32 x ½" hex head machine screw for mounting cycling slide
108	75353	Retainer—Turntable spindle thrust bearing assembly retainer
109	75876	Washer—"C" washer for mounting motor
200	75333	Motor—117 volt, 60 cycle, complete with top plate, idler wheel and drive belt
202	30870	Connector—2 contact male connector for motor leads
203	75403	Grommet—Rubber grommet for motor speed change tie rod (2 req'd)
204	75426	Plate—Motor top plate including speed change carriage, 3 mounting grommets and 1 speed change lever grommet
205	75431	Plate—Friction guide plate
206	75376	Belt—Rubber belt for motor drive shaft
207	75383	Spring—Tension spring for idler wheel
208	——	Screw—#6-32 x 2" round head machine screw to mount top plate to motor
209	75382	Wheel—Idler wheel
210	75380	Spring—Hairpin spring for idler wheel
211	75433	Washer—Dampening washer for idler wheel (2 req'd)
212	——	Screw—#6-32 x 2⅛" round head machine screw to mount top plate to motor
213	75432	Spring—Hairpin spring to mount idler carriage
214	75430	Carriage—Idler carriage
215	75433	Washer—Fibre washer
216	75429	Pulley—Drive pulley and shaft assembly for 33⅓ RPM
217	75428	Washer—Felt washer
218	75427	Retainer—Retainer ring for drive pulley and shaft
219	75386	Grommet—Rubber grommet to mount motor (3 req'd)
220	——	Washer—Flat metal washer
221	——	Spacer—Metal spacer to mount top plate to motor
222	——	Lockwasher—#6 internal teeth
223	——	Lug—Terminal lug
224	——	Nut—#6 hex nut

LUBRICATION

The mechanism is properly lubricated when it leaves the factory, so no lubrication should be necessary for a long period of time. If, however, the mechanism has unusual use or high operating temperatures, it may be necessary to add additional lubrication.

It is suggested to use Lubriplate or STA-PUT No. 512 to:

1. Pickup arm pivot.
2. Points of sliding contact with cycling slide, including:
   a. elevating rod
   b. lift arm
   c. roller on cycling cam
   d. pickup arm return lever
   e. pickup arm lever
3. End of selector lever contacting tab on cycling gear.
4. Turntable thrust bearing.
5. Sparingly on a trip slide.
6. All points of sliding contact.

Apply a small quantity of light machine oil #10 or Singer Sewing machine oil to:

1. Trip pawl pivot.
2. Cycling engagement pawl pivot.
3. Bearing of record support.
4. Elevating rod.
5. Bearing of lift arm.
6. Bearing of reject lever.
7. Bearing of stop lever.
8. Bearing of cycling gear.
9. Motor bearings.

NOTE: Keep oil or grease away from all rubber parts.

©John F. Rider

Compliments of www.nucow.com

MODEL 960285-1

PICKUP INFORMATION

Pickup force should be approximately 8 to 10 grams. This force is determined by the design of the pickup and arm assembly.

However, a tight vertical bearing in the pickup arm will tend to have the same effect as insufficient pickup force.

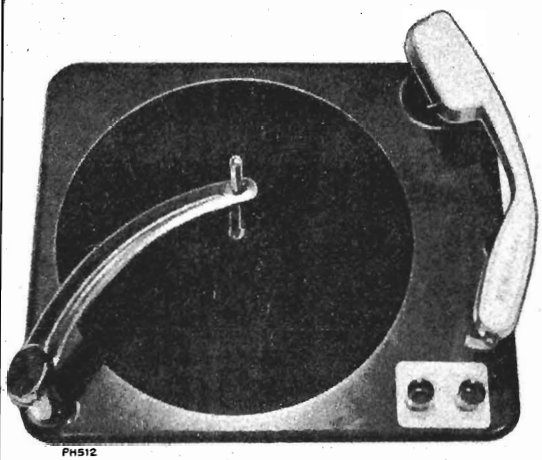

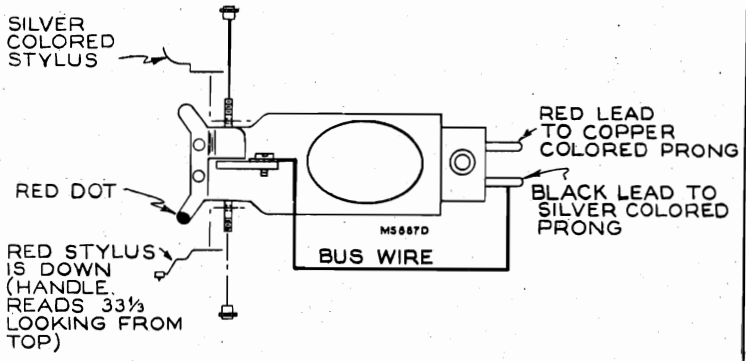

Features

1. This record changer is a center support intermix mechanism designed to play automatically a series of records up to ten 12-inch, twelve 10-inch, or ten intermixed records of the standard 78 RPM type. It will also play a series of the long playing 33-1/3 RPM type of similar diameter.
2. The mechanism is equipped with a light weight dual stylus pickup cartridge which can be selected by turning a knob in the end of the pickup arm.
3. The mechanism will automatically stop and the pickup arm return to the rest position after the mechanism has played the last selection of the stack.
4. The automatic tripping device is of the acceleration type.
5. The speed change is accomplished by a single control mounted on the motorboard.

Automatic Operation

1. Lift and rotate the record support to one side.
2. Place a stack of records over the center post.
3. Rotate the record support so the center post will extend through the hole in the end of the support.
4. Turn the speed control to select the proper speed.
5. Rotate the knob in the end of the pickup arm to the proper numeral corresponding to the turntable speed.
6. Turn the function control knob to reject and release. The mechanism will play one side of each record of the stack until the last selection has been played at which time it will stop automatically.
7. To reject a record being played, turn the function control knob to reject and release.
8. To remove records, lift and turn the record support to one side.
9. Lift the stack of records straight up.

Manual Operation

1. Lift and rotate the record support to one side.
2. Place the record to be played on the turntable (tilt slightly) to slide over the stop in the center post.
3. Set the speed and pickup cartridge controls properly.
4. Turn function control to reject and release. (Allow mechanism to complete cycle.)
5. Place the record support (2) over the spindle, permitting it to rest on the step of the spindle.
6. The mechanism will play the record after which it will stop automatically.

Lubrication

The mechanism is properly lubricated when it leaves the factory, so lubrication should not be necessary for a long period of time. If, however, the mechanism has unusual use or high operating temperatures, it may be necessary to add additional lubrication.

It is suggested to use Lubriplate or STA-PUT No. 512 to:

1. Pickup pivot bushing (27).
2. Frictional contact on the clutch assembly.
3. Lift arm bearing and cam faces.
4. Spring contact on stop rod (89).
5. Channel on cycling cam (50).
6. Roller on end of center post (39), ball bearing races 5-6-7.
7. Trip slide (71).
8. All frictional contacts and gears in general.

Apply a small quantity of light oil No. 10 or Singer Sewing machine oil to:

1. Trip dog (52).
2. Motor bearings.
3. Control levering bearing (59).
4. Record support bearing (2).

NOTE: Keep oil or grease away from all rubber parts.

©John F. Rider

Compliments of www.nucow.com

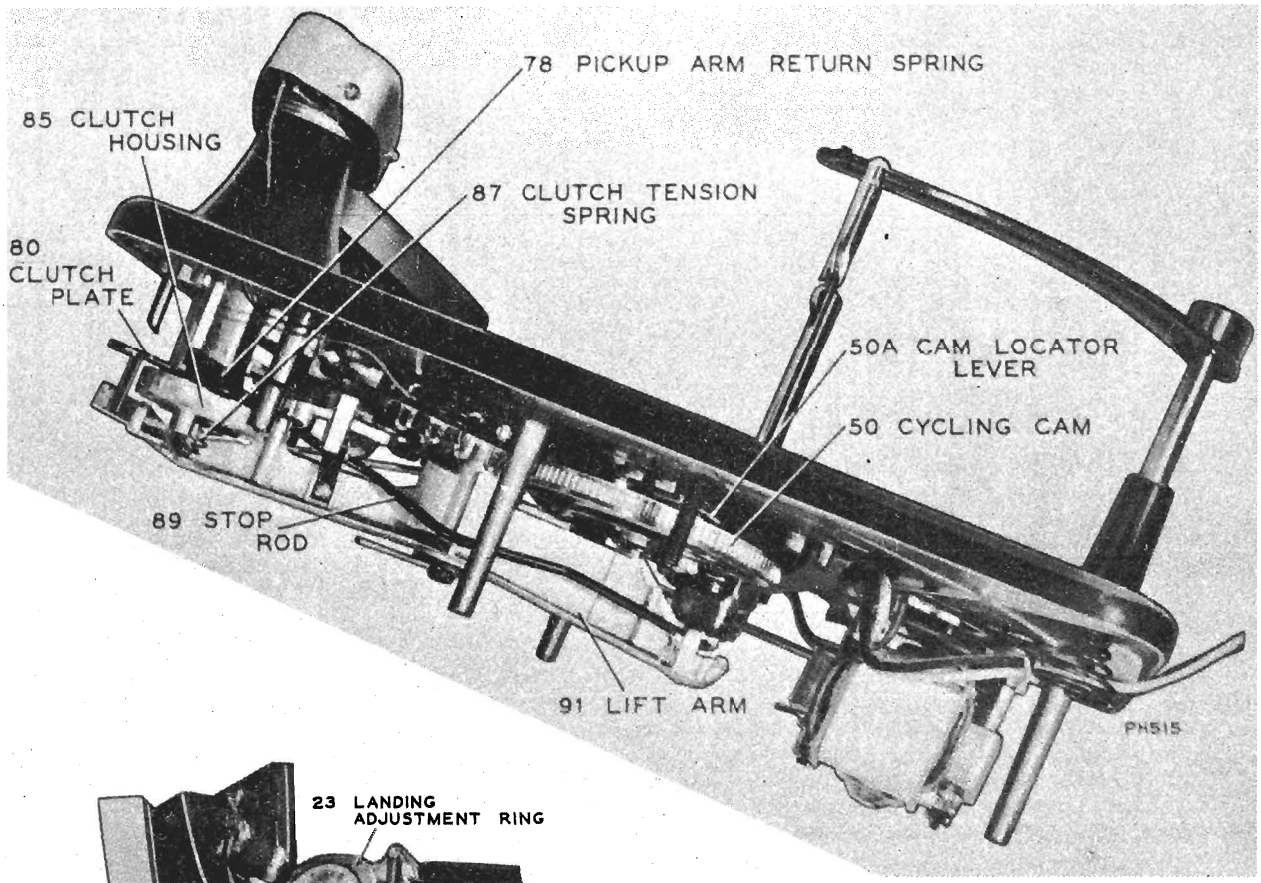

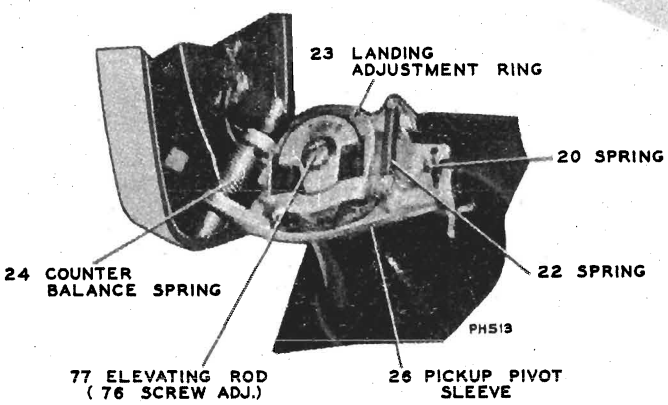

Functions of Principal Levers

Control lever (59A)

The function of the control lever is to actuate both the reject rod (40) and the power switch (66). It is also engaged by the stop rod (89) causing the mechanism to stop automatically after the last selection has been played.

Trip slide (71)

The trip slide consists of a long thin piece of brass which actuates the lower trip dog to start automatic tripping.

Stop rod (89)

The stop rod consists of a long rod running lengthwise along the side of the lift arm (91). The function of the stop rod is to engage the control lever and stop the mechanism after the last selection has been played.

Lift arm (91)

Lift arm functions as a main tie between the cycling cam (50) and the other parts of the mechanism. It also directs the separation of the records and the movement of the pickup arm.

Centerpost (39)

The center post functions as a support for the stack of records and also provides a means of record separation by the mechanism inside the center post.

Record support (2)

The record support performs the function of stabilizing the stack of records. It also clamps the push off mechanism built inside the center post which in turn controls the stopping of the mechanism after the last selection has been played.

Landing adjustment ring (23)

The landing adjustment ring forms a clamp which is used for landing adjustment and a latch controlling the indexing of 10- and 12-inch records.

Reject rod (40)

The reject rod forms a tie between trip dog and control lever (59A).

Upper trip dog (52)

The trip dog consists of a small piece of hardened steel mounted on the main cycling cam. The contact between the off-set on the turntable shaft and the trip dog cause the teeth of the cam and the teeth of the turntable shaft to engage thereby starting change cycle.

Lower trip dog (60)

The lower trip dog is in contact with trip slide (71) when tripping. It is connected by friction to the shaft of upper trip dog thereby providing the necessary take up to prevent the pickup from skipping grooves when tripping starts.

©John F. Rider

Compliments of www.nucow.com

MODEL 960285-1

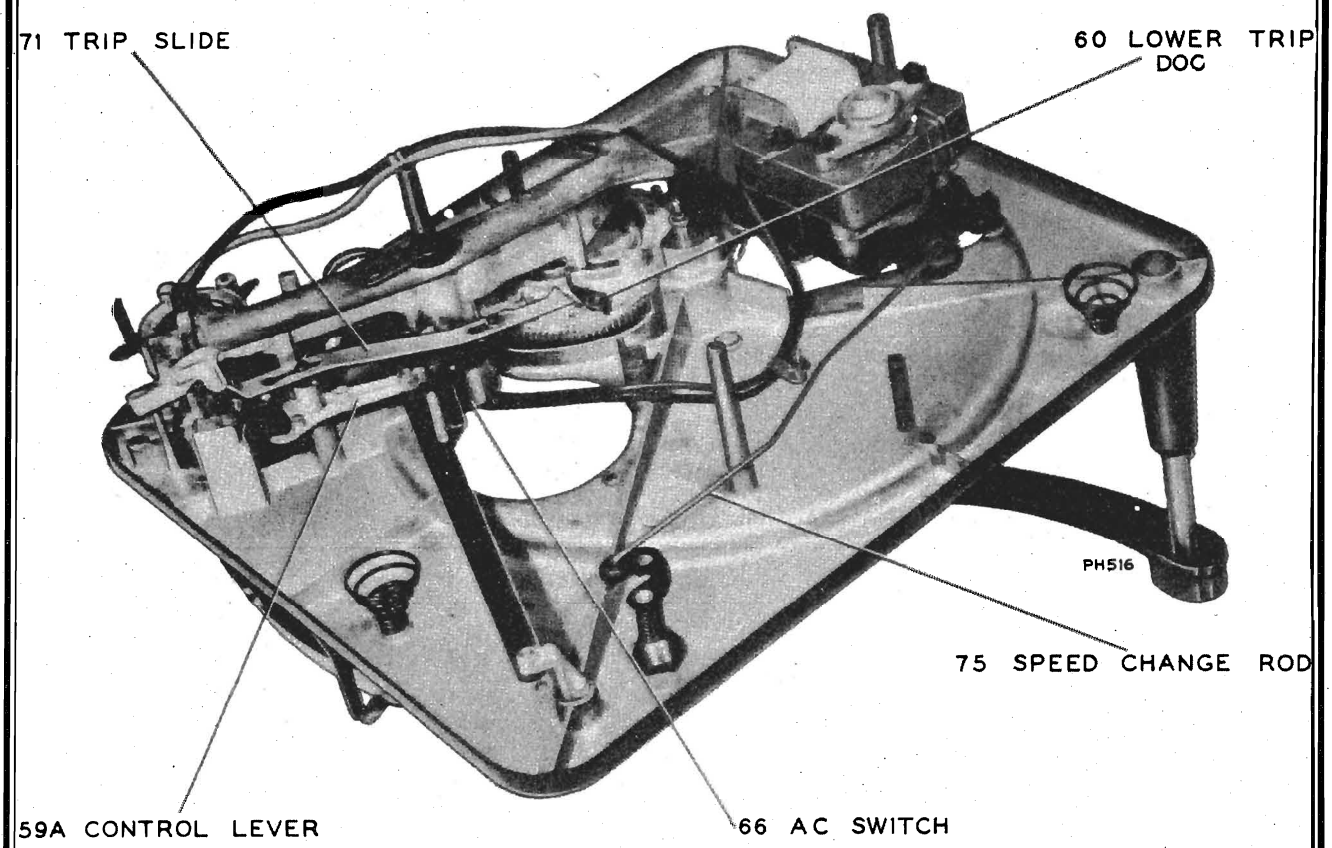

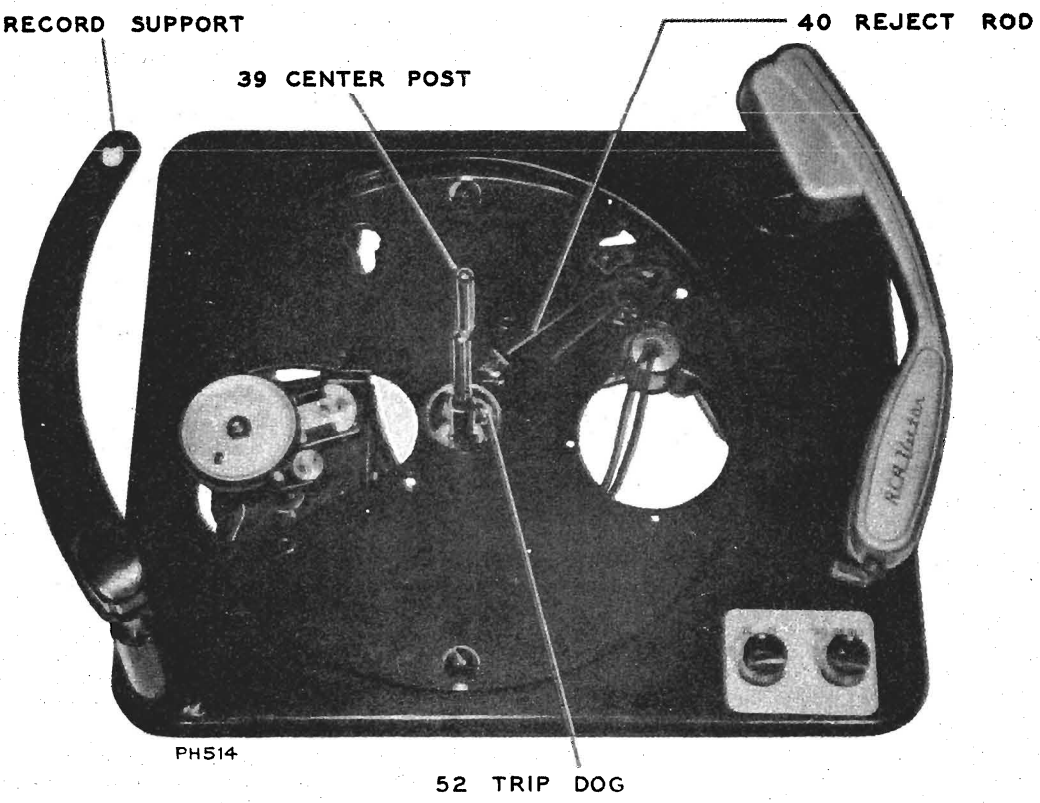

©John F. Rider

Compliments of www.nucow.com

Cycle of Operation

NOTE: In the cycle of operation it is assumed the mechanism has stopped automatically with the pickup arm on the rest.

FUNCTION	DESCRIPTION
Place a stack of records over the center post (intermixed if so desired). Place the record support over the center post.	1. The stack of records rest on the step in the center post (39). 2. The hole in the end of the record support (2) permits the end of the support to slide over the center post and rest on the stack of records. This stabilizes the records.
Turn the speed selector knob to 78 or 33-1/3 rpm position.	1. The speed change is accomplished by shifting to either of two shafts on the motor which are rotating at different speeds. The additional shaft is connected by a small rubber belt (36).
Rotate the knob to select the proper stylus.	1. The rotation of the stylus knob (8) selects the proper stylus depending on the type of record to be played.
Rotate control knob to reject position and release.	1. The operating control actuates control lever (59A) which in turn actuates the power switch. This starts the turntable rotating. 2. Further rotation of the control knob moves the reject rod (40) sufficiently to actuate the trip dog (52) which starts change cycle.

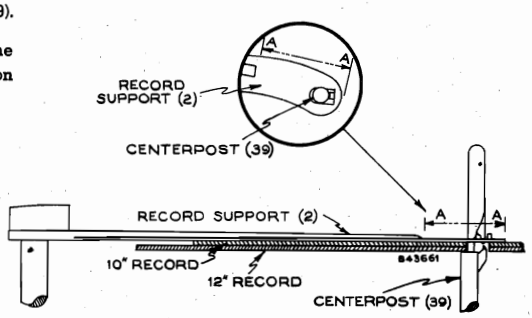

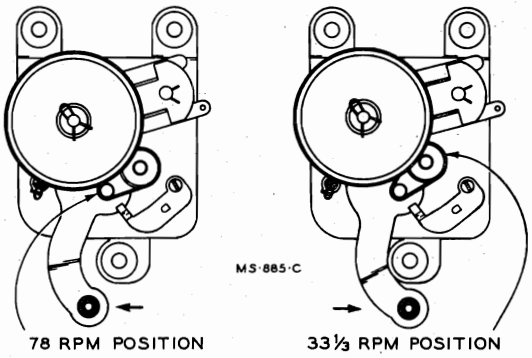

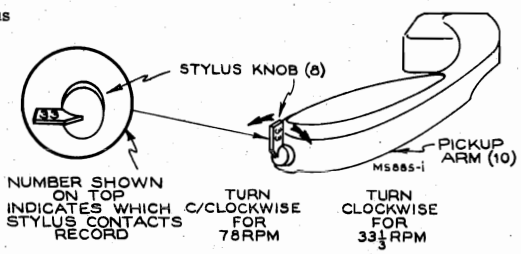

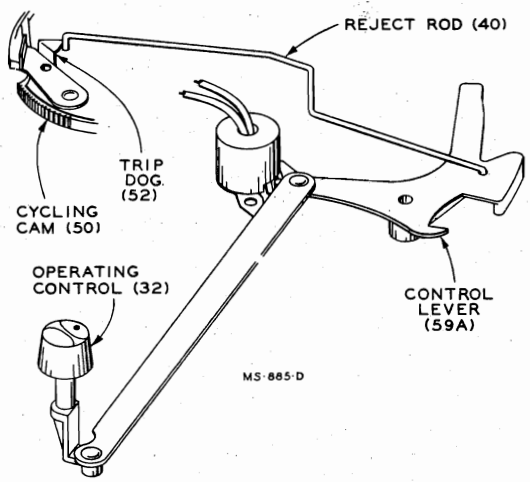

©John F. Rider

Compliments of www.nucow.com

MODEL 960285-1

Cycling starts.

1. The reject rod (40) has moved the trip dog (52) sufficiently for the off-set in the rotating turntable shaft to engage and tend to push it away.
2. Since the trip dog (52) is mounted on the edge of the cycling cam (50) the movement rotates the cam and in so doing, causes engagement between the teeth in the turntable shaft and the cycling cam. This engagement starts change cycle.
3. As the cycling cam rotates, a small roller mounted on the lift arm (91) follows the track formed in the cycling cam (50). This engagement causes the lift arm (91) to start rotating in a clockwise direction (viewed from the bottom).
4. The rotation of the lift arm (91) also causes contact with the small roller connecting the push-off mechanism inside the center post. This contact pushes the small roller and shaft upward.

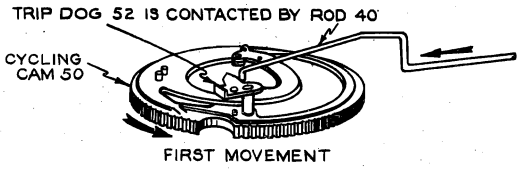

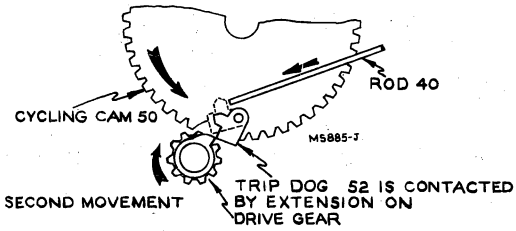

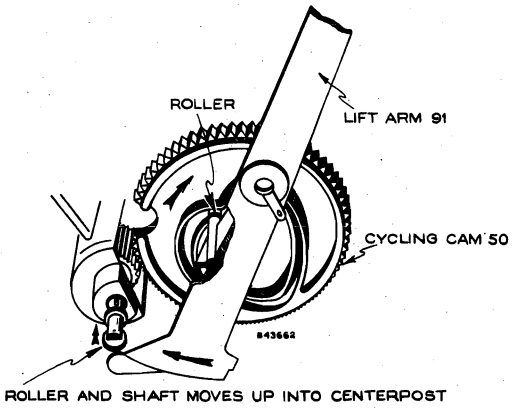

The pickup rises and remains outside turntable area.

1. While the lift arm (91) is rotating the end directly under the pickup arm pivot engages the elevating rod (77) and raises the pickup.
2. The pickup has been setting on the rest so it moves out very little when the lift arm (91) is rotating in a clockwise direction (viewed from bottom).
3. At this same time the extended end of the lift arm (91) contacts end of clutch plate (80) rotating it in a clockwise direction (viewed from bottom) against the tension of spring (78).
4. Since both the clutch plate (80) and housing (85) are rotated to the extreme clockwise direction, the clutch plate is engaged in a notch in the clutch housing which couples the two together.

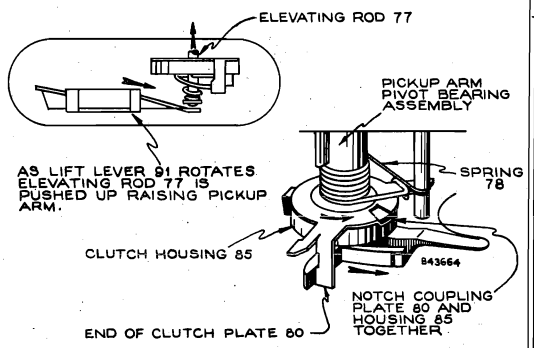

Record drops to turntable.

1. The upward movement of the push-off mechanism actuates the small lever embedded in the center post to engage the center hole of the record and push the record off the step permitting it to drop to the turntable.

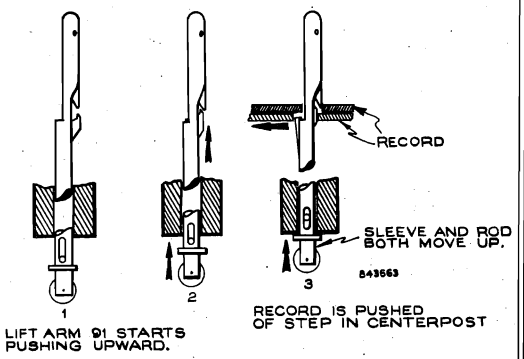

©John F. Rider

Compliments of www.nucow.com

The pickup moves in for landing.

1. The next instant the lift arm (91) starts rotating in a counter-clockwise direction (viewed from bottom) returning to normal out of cycle position. The separator mechanism returns to normal, and the pickup arm is pushed in by the force produced by the expanding spring (78).

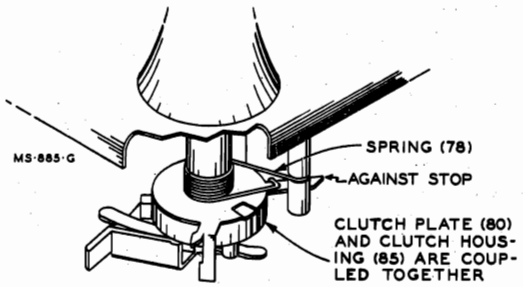

2. The pickup arm continues to be pushed in until the end of the clutch plate (80) comes against the stop. At this instant the pickup is directly over the landing point on the record.

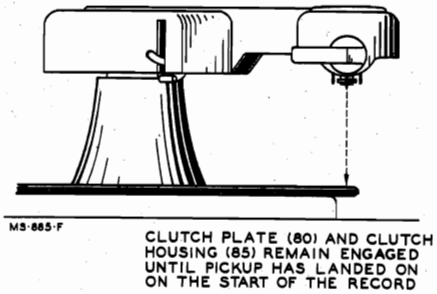

The pickup lands.

1. The clutch housing (85) is lowered slightly unlatching the clutch plate (80). This unlatching permits free movement of the pickup arm.

2. The pickup is at this moment landing on the record.

   NOTE: It should be made clear at this time that the pickup arm, landing adjustment ring (23), pivot sleeve (26), bushing (27), pivot (82) and clutch assemblies (78 to 88) move horizontally as one unit inside the pivot housing on the motorboard. In addition the pickup pivot sleeve (26) rotates in respect to the bushing (27) in approximately a 5 or 10 degree arc. This movement determines the difference in the landing position on ten- or twelve-inch records.

   As the pickup arm is moved out with each change cycle, the landing adjustment ring (23) it latched to the pickup pivot sleeve (26) through the latch (26A). If a ten-inch record drops to the turntable, the latch remains engaged and the pickup lands on the ten-inch record. On the other hand, if a twelve-inch record drops to the turntable, the edge of the record contacts the small lever at the side of the pickup arm and unlatches the pickup adjustment ring (23). This unlatching allows the pickup to position for landing on twelve-inch records.

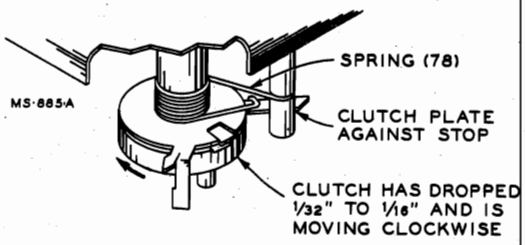

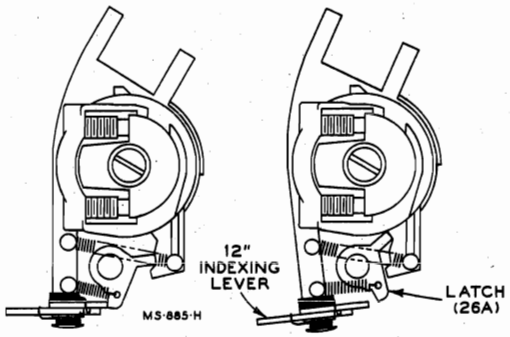

LANDING ADJUSTMENT RING (23) REMAINS LATCHED FOR 10" RECORD LANDING

LANDING ADJUSTMENT RING (23) IS UNLATCHED FOR 12" RECORD LANDING

Change cycle is completed and record plays.

1. The change cycle is completed as the cam locator lever (50A) engages the two studs extending from the bottom of the motor board. This permits the drive gear on the turntable shaft to rotate in the cut away section of the cycling cam.

2. As the record plays, the pickup moves in toward the center of the record carrying the trip slide (71) along because of the contact made with the projection on the clutch housing which is rotating with the pickup arm pivot.

3. The trip slide (71) moves the trip dog (52) slightly with each revolution of the record, but this movement is reversed each time the off-set on the turntable shaft comes in contact with the trip dog (52). The back movement is taken up in the friction connection between the upper and lower trip dog.

4. The trip dog (52) is mounted on the edge of the cycling cam (50) at such an angle that as long as the pickup moves in at a constant rate of speed the projection contacts the trip dog (52) along the side and pushes it back. When the pickup leaves the recorded section of the record, the rapid acceleration results in the rapid movement of the trip dog (52). The dog assumes such an angle that the off-set on the turntable shaft contacts the end and rotates the cycling cam sufficiently to cause engagement between the teeth of the cycling cam and teeth in the turntable shaft. This starts change cycle.

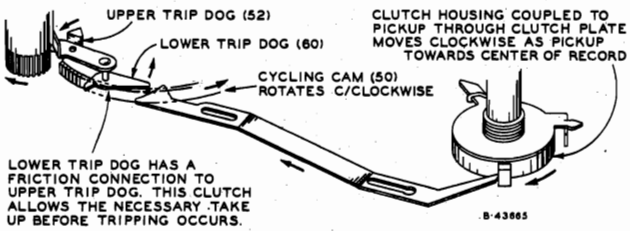

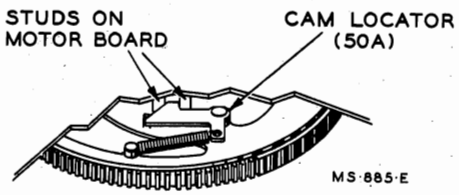

©John F. Rider

Compliments of www.nucow.com

MODEL 960285-1

Pickup raises and moves out.

1. After the mechanism has been tripped, the pickup moves out from action of the lift arm on the clutch assembly which is linked to pickup arm.
2. The mechanism again follows the preceding sequence of dropping and playing records until the last record of the stack has been played.
3. After the last selection has been played and the mechanism again goes into change cycle, the support post (2) has dropped sufficiently for the hole in the end to clamp and stop the push-off action built in the center post.
4. Since the push-off action is blocked and the lift arm (91) tends to push up on the separator mechanism, the shaft mounting the small roller moves up into the brass sleeve instead of the entire assembly moving up.
5. The brass sleeve remaining down forming a stop for the end of the stop rod (89) which is mounted on the side of the lift arm (91). This contact causes it to rotate when the lift arm moves by.
6. The bent-up end of the stop rod (89) nearest the pickup arm pivot engages the control lever (59A).
7. The engagement between the stop rod (89) and the control lever (59A) turns the power switch off and also holds one end of the clutch plate causing the pickup to set down on the rest instead of the record.
8. The cycle is completed when the cycling cam becomes disengaged from the gear on the turntable shaft. This is accomplished by a cut-away section of the cam.

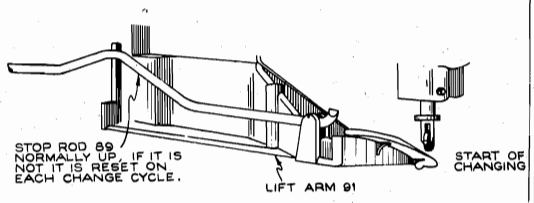

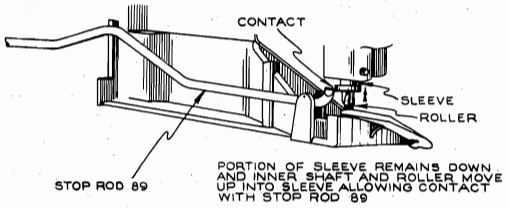

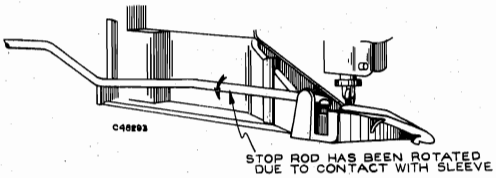

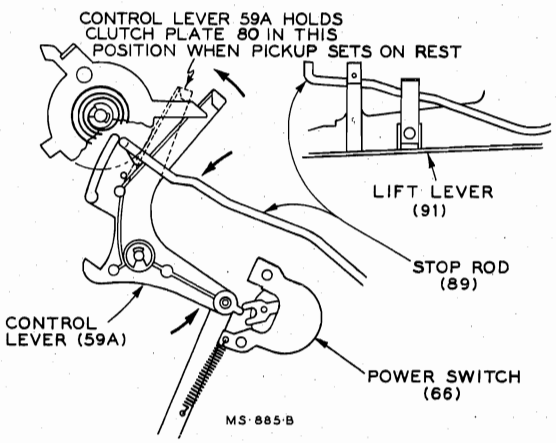

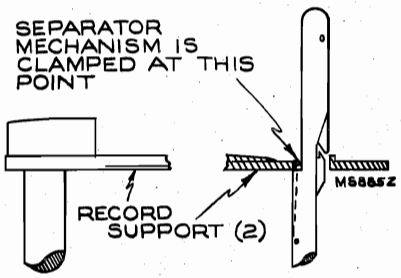

ADJUSTMENTS

Approximate Landing Adjustment (if pickup arm assembly has been removed).

1. Remove power from mechanism.
2. Place a ten inch record on turntable.
3. Rotate turntable by hand until the pickup is just ready to land. Make sure the notch in the clutch plate remains engaged with clutch housing. The end of the clutch plate must be against stop also.
4. Hold the clutch and plate assembly. Loosen the set screw "C" and move the pickup into the approximate landing position.
5. Allow approximately 1/32" to 1/16" vertical play in pickup pivot shaft. (This vertical play is critical.)
6. Tighten set screw "C."

Exact Landing Adjustment.

1. Remove power from mechanism.
2. Place a ten inch record on turntable.
3. Rotate turntable by hand until pickup is about ready to land.
4. To move pickup in, loosen set screw "A" a few turns and tighten "B."
5. To move the pickup out, loosen set screw "B" a few turns and tighten "A."

Pickup Arm Height.

Adjust screw (76) in the end of the elevating rod so the under side of pickup arm clears the rest by 1/8" to 3/16" during change cycle.

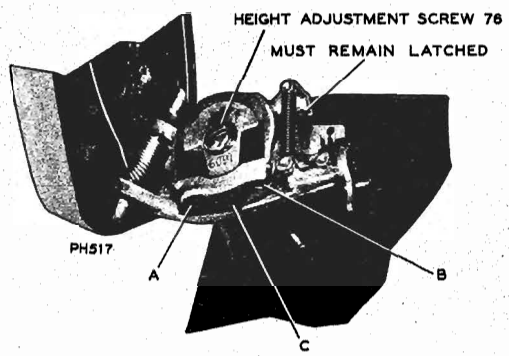

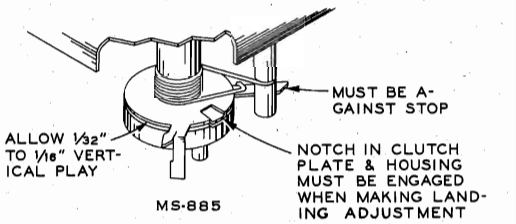

©John F. Rider

Compliments of www.nucow.com

MODEL 960285-1

PICKUP SKIPS GROOVES

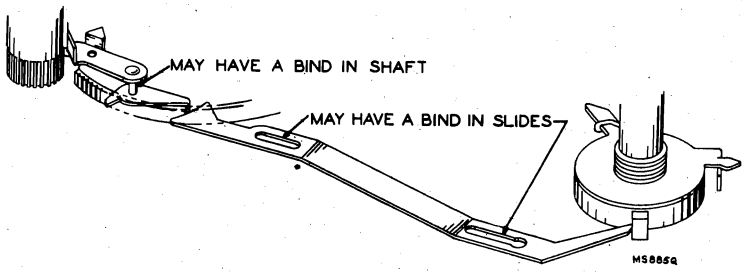

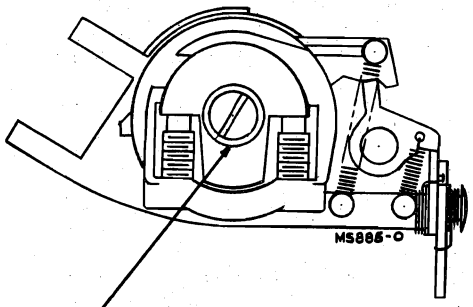

ELEVATING ADJUSTMENT MAY BE SET TOO HIGH

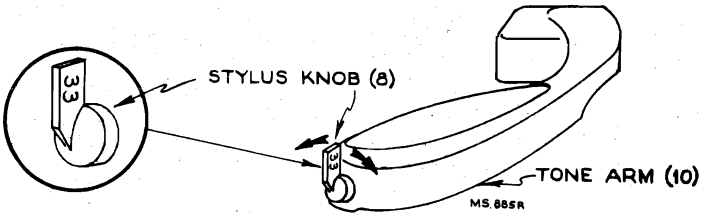

MAY BE USING INCORRECT STYLUS

TURN C/CLOCKWISE FOR 78RPM

TURN CLOCKWISE FOR $33\frac{1}{3}$ RPM

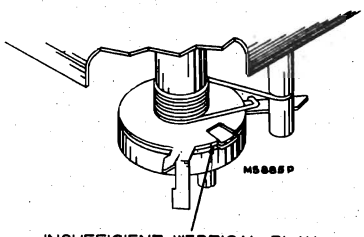

INSUFFICIENT VERTICAL PLAY IN PICKUP PIVOT SHAFT MAY PREVENT UNLATCHING OF CLUTCH, SKIPPING OF GROOVES MAY RESULT

FAILURE TO SEPARATE RECORDS PROPERLY

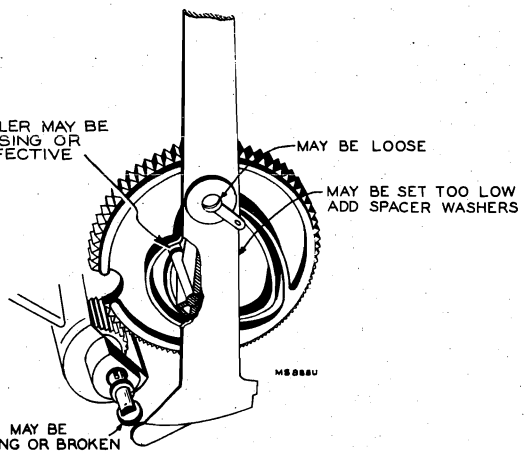

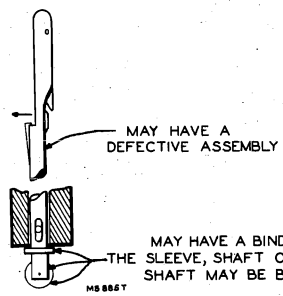

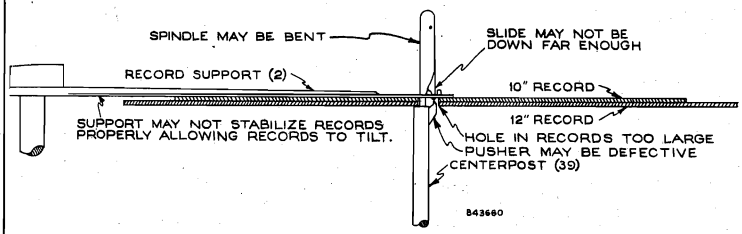

FAILS TO CHANGE SPEED

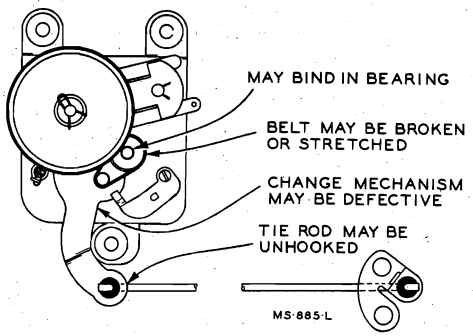

©John F. Rider

Compliments of www.nucow.com

MODEL 960285-1

PICKUP FAILS TO LAND PROPERLY

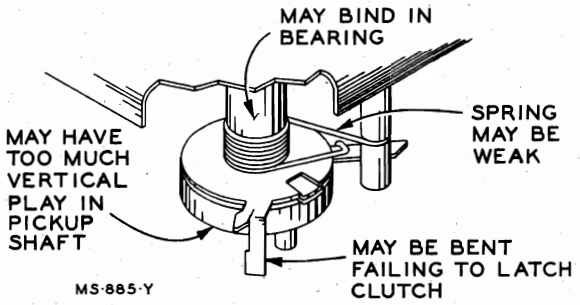

PICKUP FAILS TO LAND CORRECTLY ON 12" RECORDS

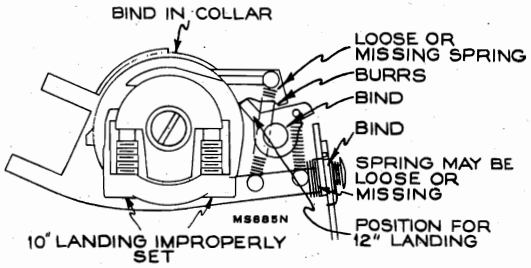

"WOW" OR SPEED VARIATION

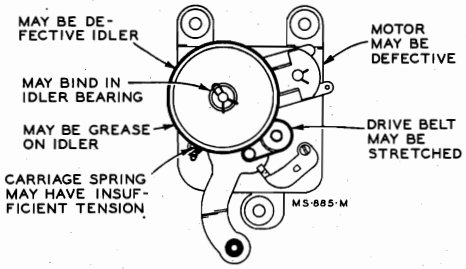

PICKUP FAILS TO LAND CORRECTLY ON 10" RECORDS

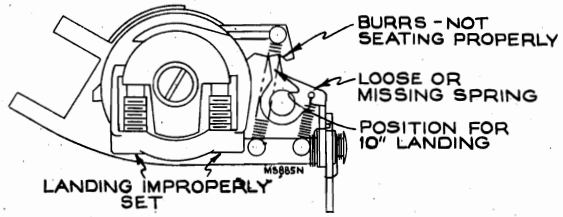

REJECT CONTROL DOES NOT FUNCTION

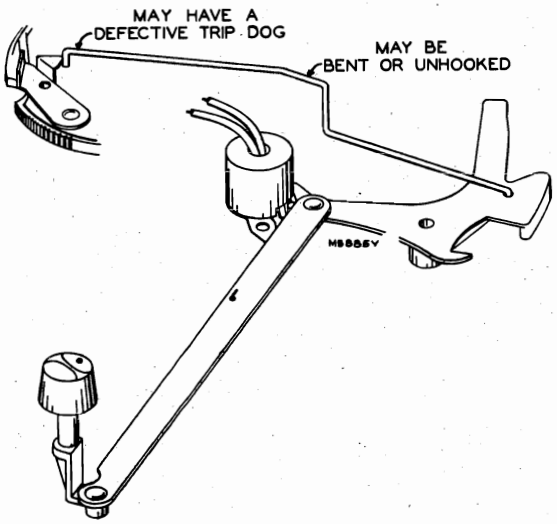

CONTINUOUS TRIPPING

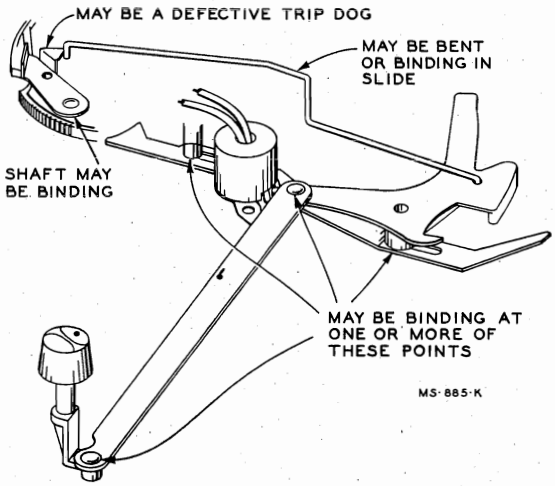

FAILURE TO TRIP

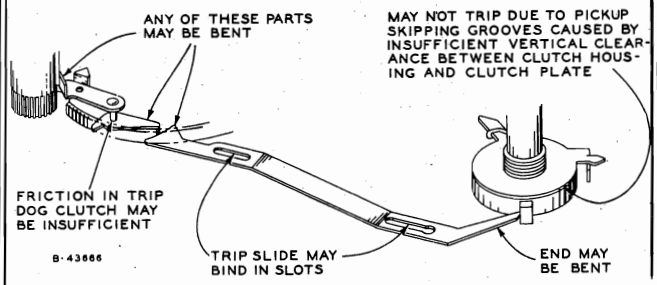

PREMATURE TRIPPING

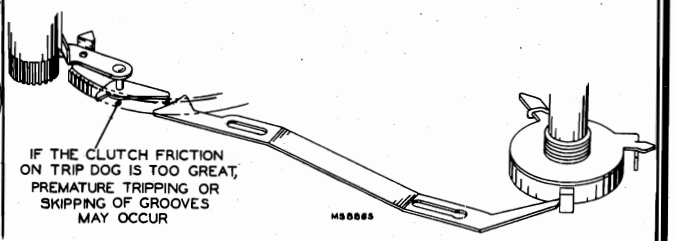

©John F. Rider

Compliments of www.nucow.com

MODEL 960285-1

PICKUP SETS DOWN ON REST INSTEAD OF RECORD

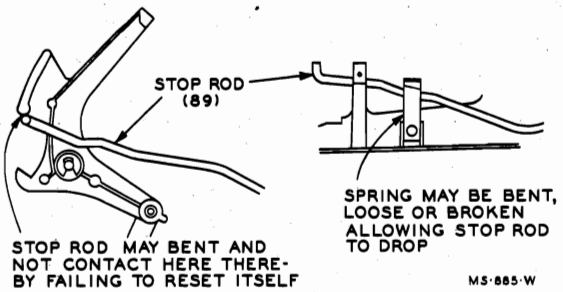

MECHANISM SHUTS OFF PREMATURELY

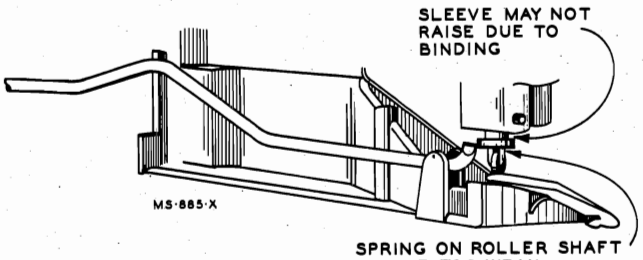

MECHANISM FAILS TO STOP AUTOMATICALLY

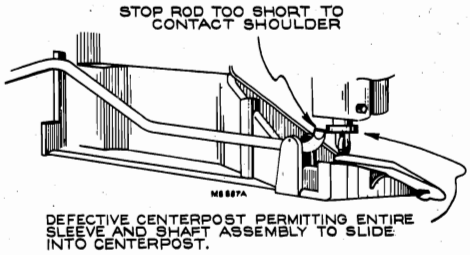

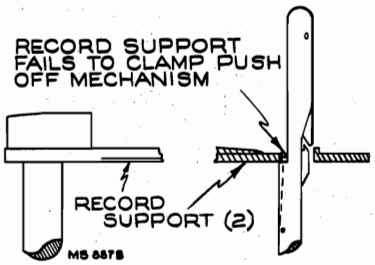

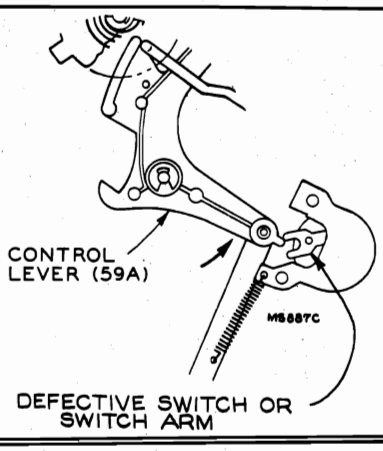

DO YOU KNOW?

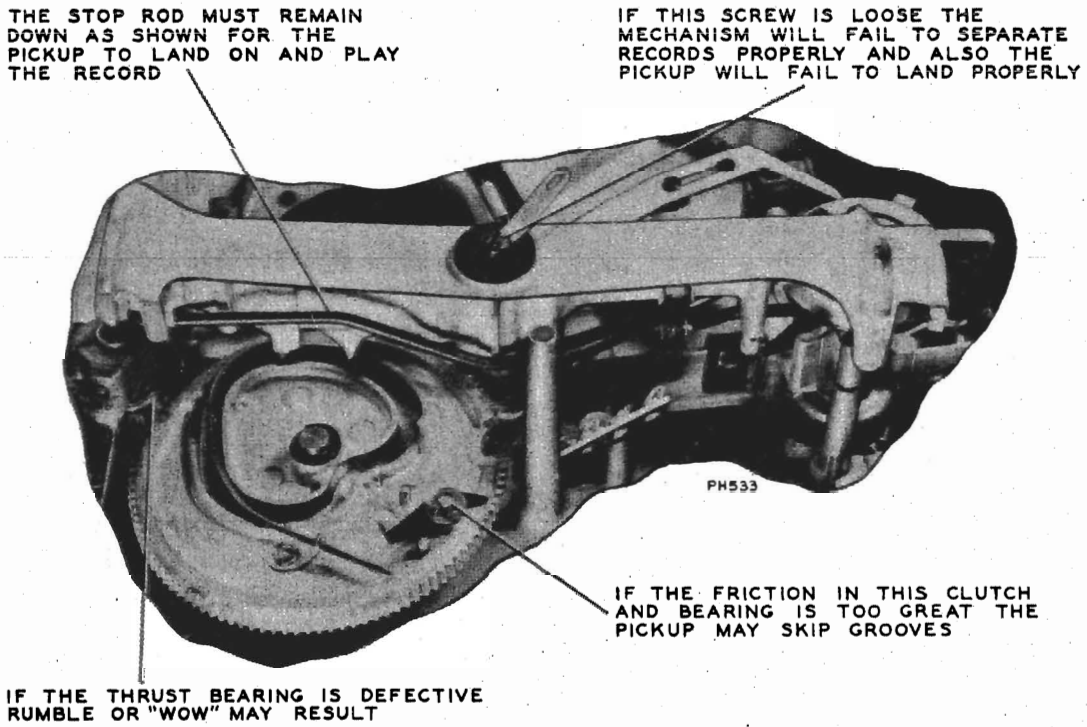

©John F. Rider

Compliments of www.nucow.com

MODEL 960285-1

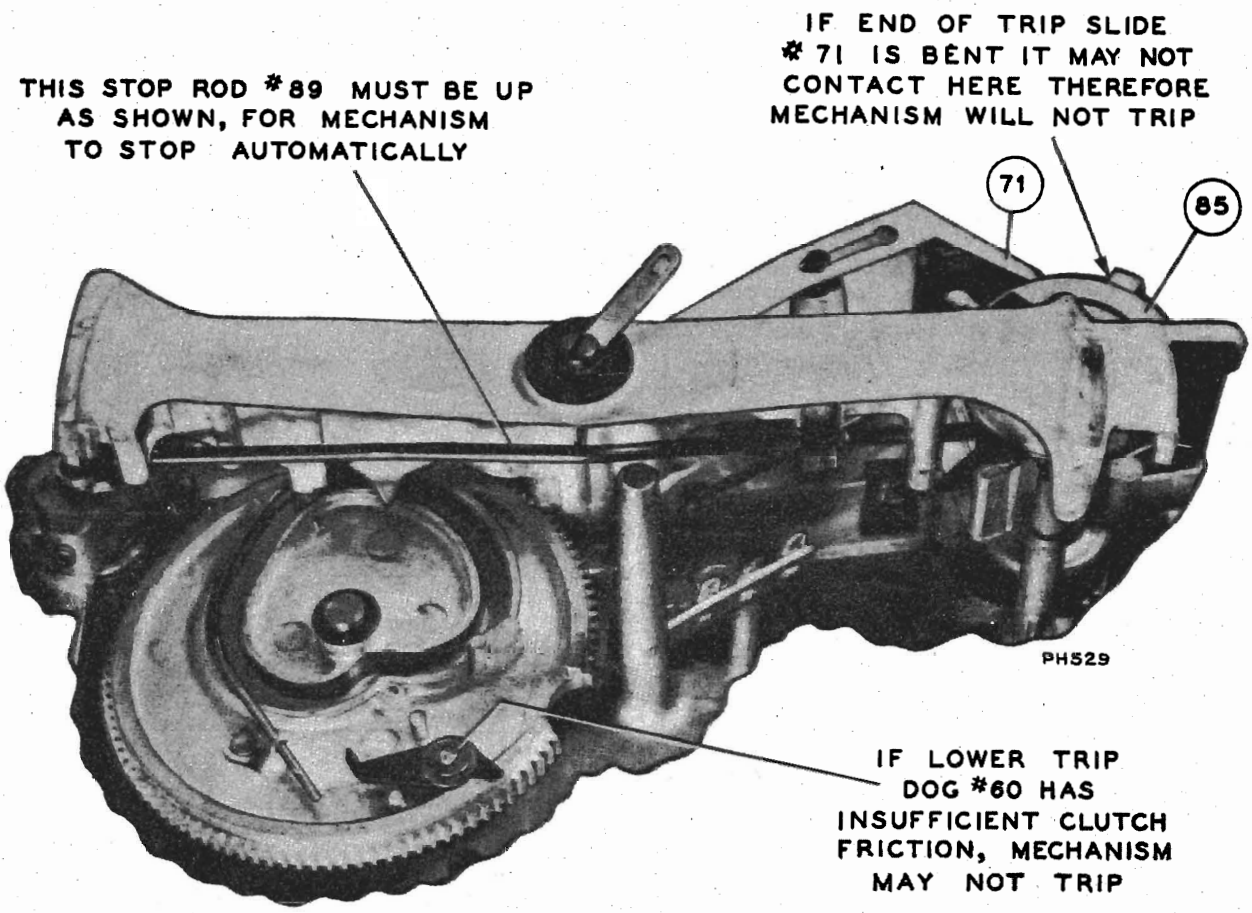

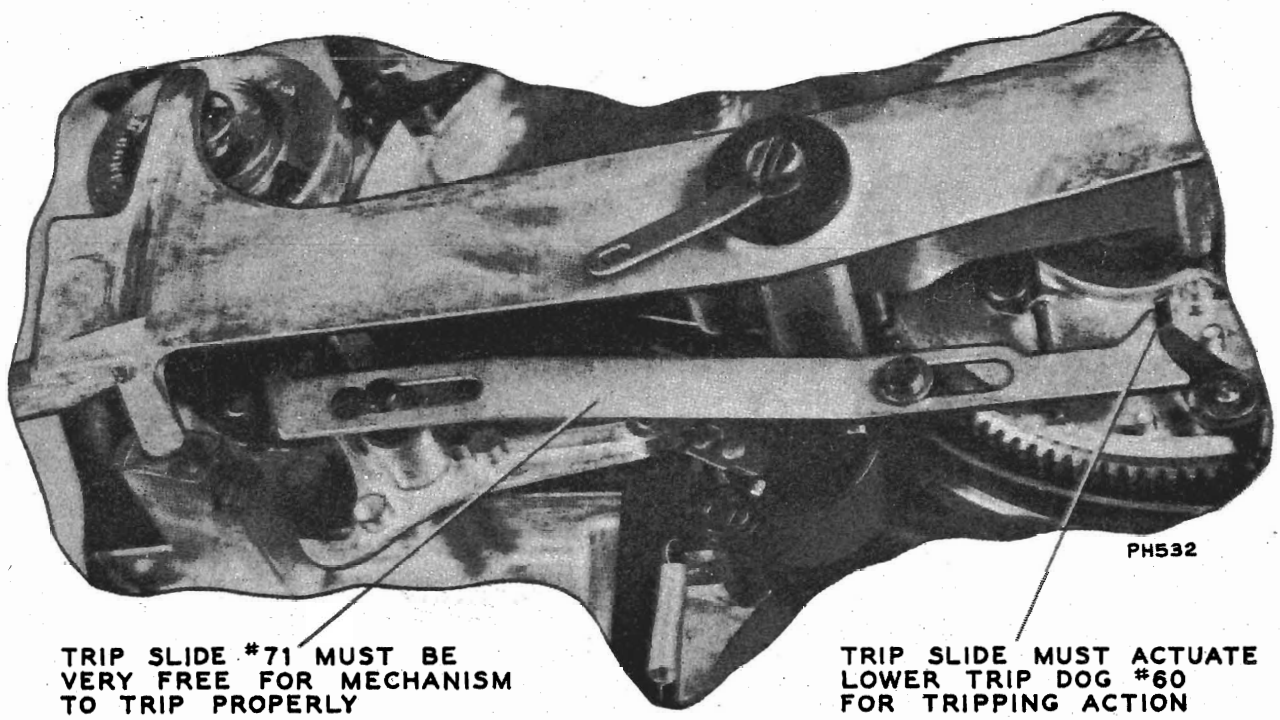

©John F. Rider

Compliments of www.nucow.com

MODEL 960285-1

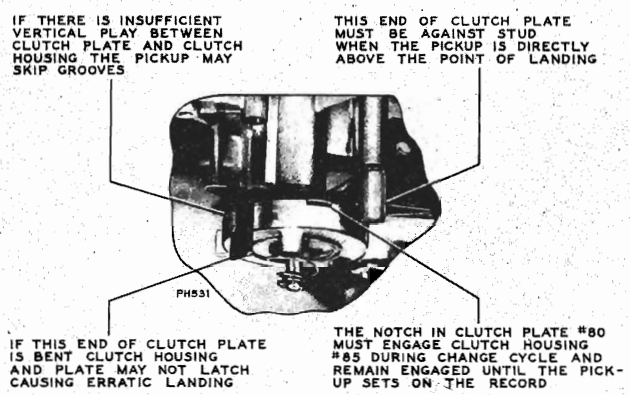

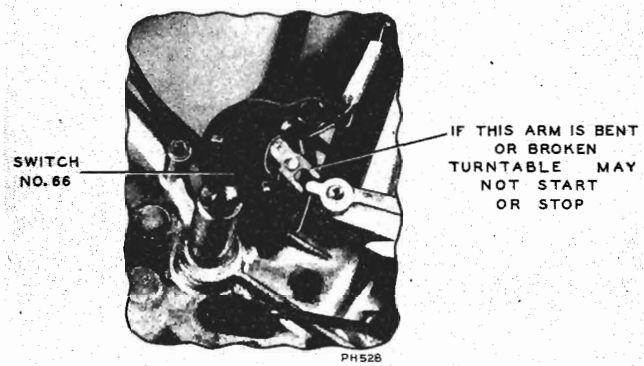

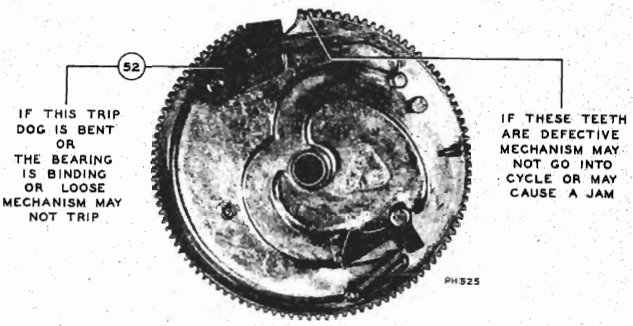

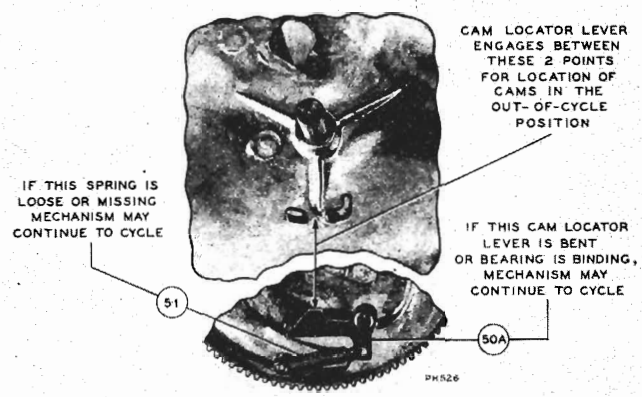

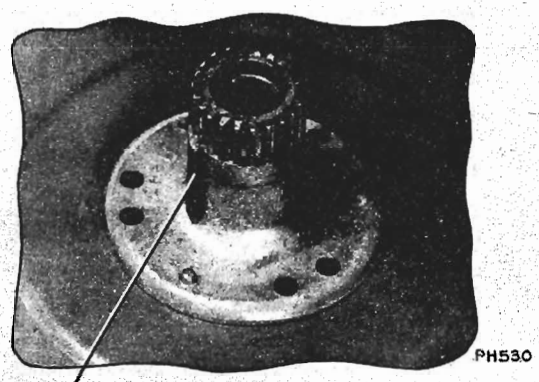

THE "OFFSET" ACTUATES TRIP DOG #52 CAUSING THE GEARS OF THE TURNTABLE SHAFT AND CYCLING CAM TO ENGAGE AND CARRY THE MECHANISM THROUGH CYCLE

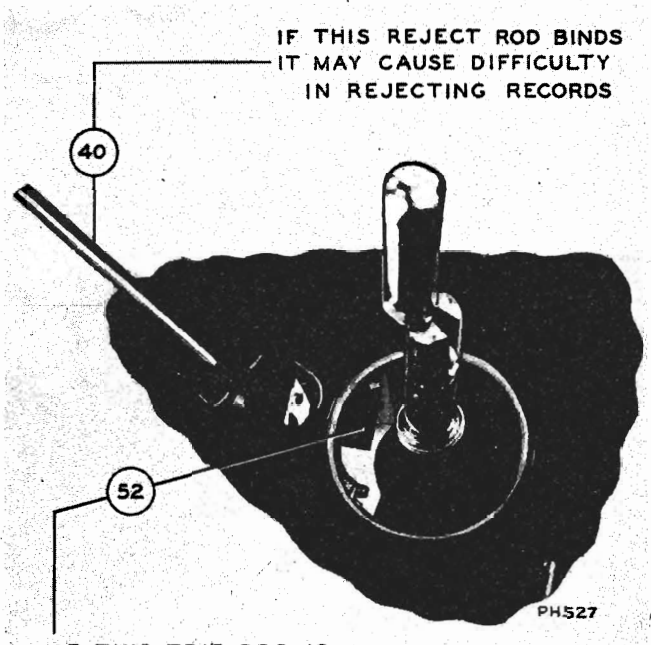

IF THIS TRIP DOG IS BENT, LOOSE OR BINDING IN THE BEARING MECHANISM MAY NOT TRIP

©John F. Rider

Compliments of www.nucow.com

MODEL 960285-1

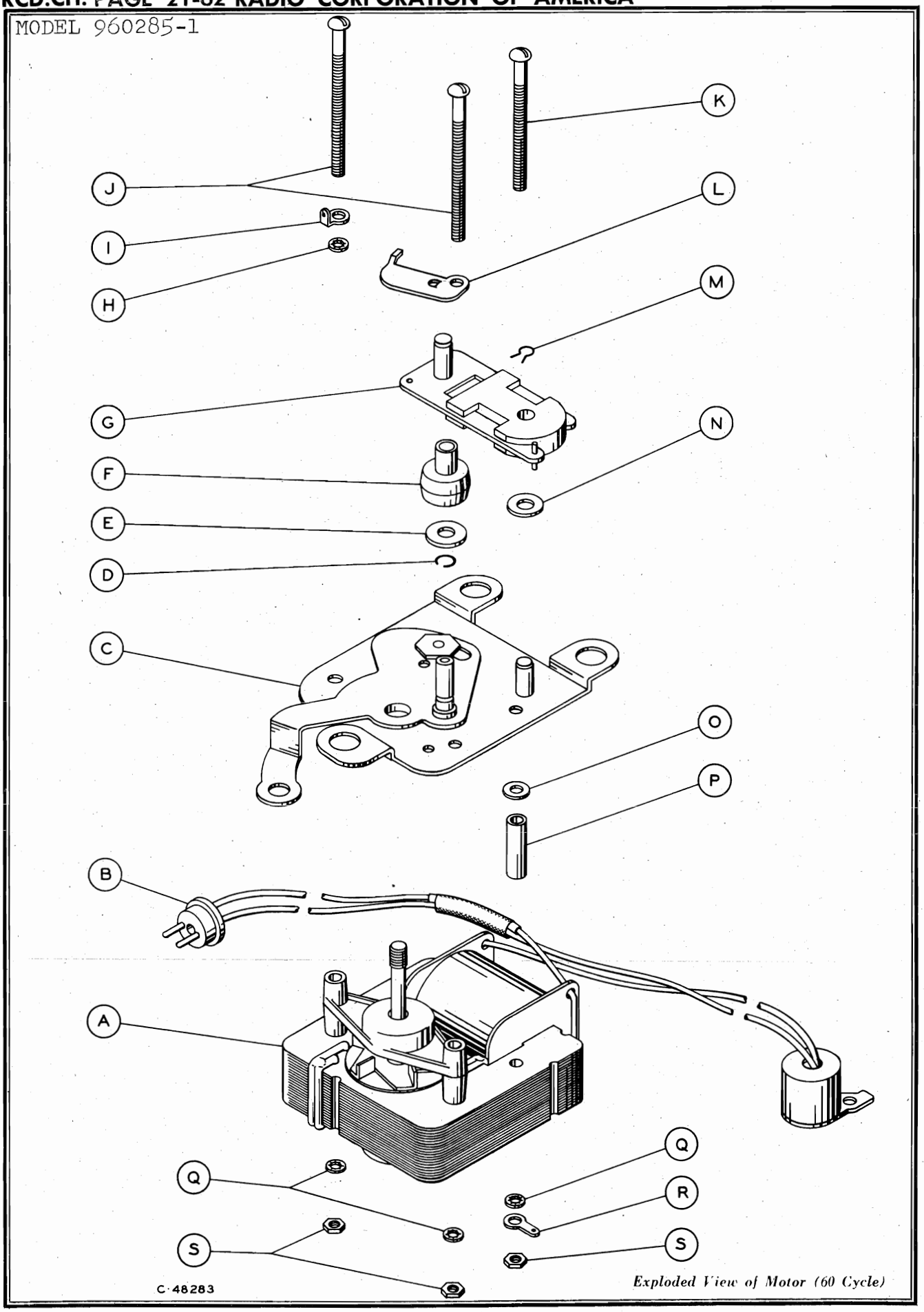

Exploded View of Motor (60 Cycle)

©John F. Rider

Compliments of www.nucow.com

MODEL 960285-1

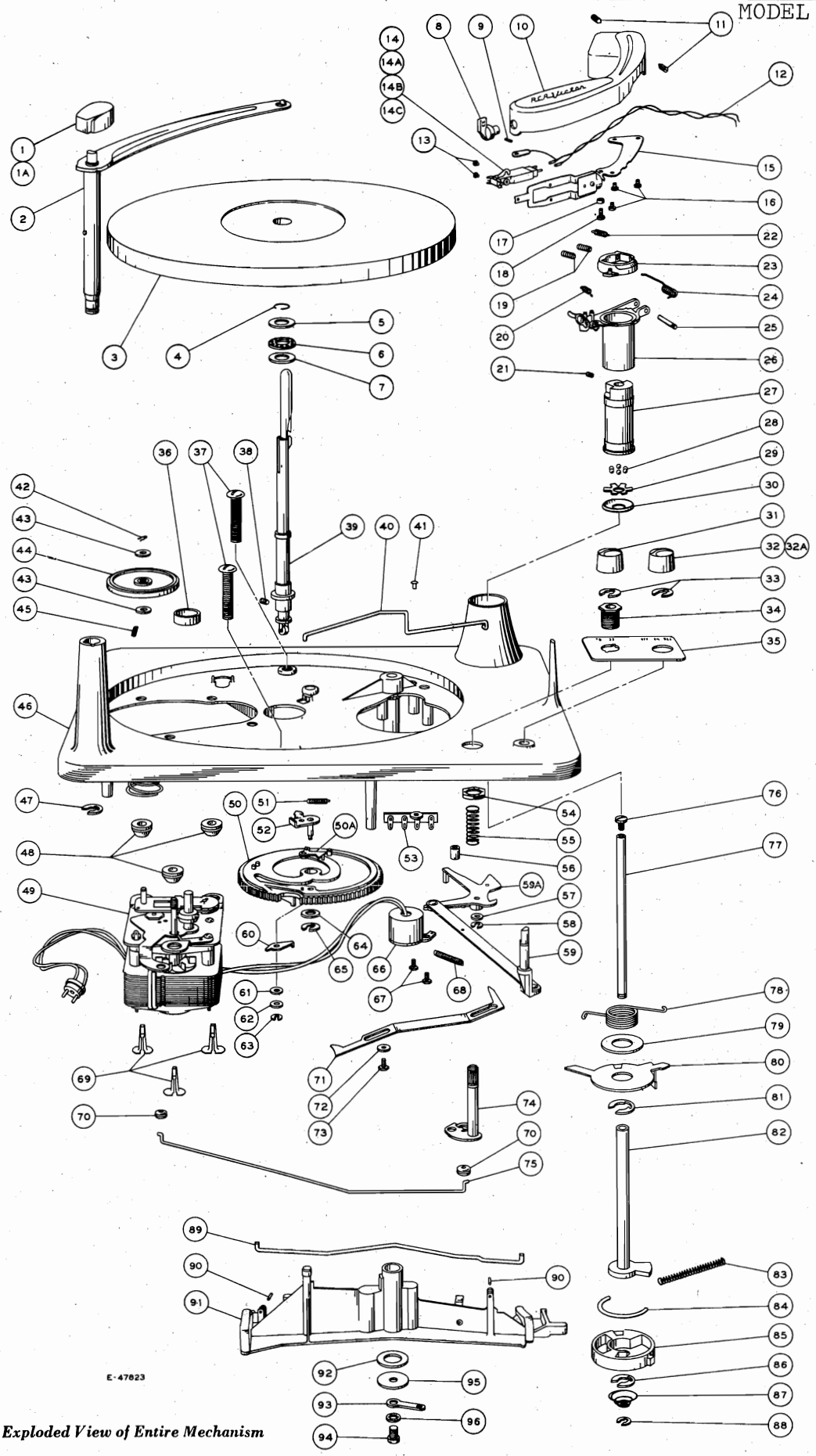

Exploded View of Entire Mechanism

©John F. Rider

Compliments of www.nucow.com

MODEL 960285-1

REPLACEMENT PARTS

ILL. No.	STOCK No.	DESCRIPTION
1	75350	Knob—Record support knob
1A	——	Spring—Retaining spring for record support knob
2	75351	Support—Record support
3	75352	Turntable
4	75353	Retainer—Turntable spindle thrust bearing assembly retainer
5	75354	Washer—Thrust washer for turntable bearing
6	75355	Bearing—Thrust bearing
7	75354	Washer—Thrust washer for turntable bearing
8	75264	Knob—Stylus selector knob (handle type) complete with screw
9	——	Screw—Screw for stylus selector knob (included in 75264, ILL. 8)
10	75356	Arm—Pickup arm shell only (plastic)
11	75357	Pivot—Pickup arm pivot (2 required)
12	75358	Cable—Three wire pickup cable complete with connectors
13	——	Screw—Mounting screw for crystal (2 required) (No. 4-40 x 1/8" round head screw)
14	75044	Crystal—Replacement crystal complete with styluses
14A	75045	Stylus—Stylus only (red) for 33 RPM section
14B	75046	Stylus—Stylus only (plain) for 78 RPM section
14C	75274	Nut—Mounting nut (knurled) for stylus
15	75359	Mount—Crystal cartridge mount and swivel assembly
16	71097	Screw—Mounting screw for crystal mount (3 required) (No. 4 x 1/4" self-tapping)
17	75360	Spacer—Metal spacer for crystal mount screw, ILL. 18
18	75002	Screw—Mounting screw for crystal mount (No. 4 x 3/8" self-tapping)
19	75361	Screw—Landing adjustment screw (2 required) (No. 10 x 1/2" headless—special)
20	75362	Spring—Tension spring for indexing latch
21	31085	Screw—Pickup pivot bushing screw (No. 8 x 1/8" Allen head set screw)
22	75363	Spring—Tension spring for landing adjustment ring
23	75364	Ring—Landing adjustment ring
24	75365	Spring—Counterbalance spring for pickup arm
25	75366	Pin—Pivot pin for counterbalance spring
26	75367	Sleeve—Pickup arm pivot sleeve, including latch and two springs
27	75368	Bushing—Pickup arm pivot sleeve bushing
28	10941	Ball—Steel ball (1/8" diameter)
29	75369	Retainer—Ball bearing retainer
30	75370	Cup—Ball race cup
31	75371	Knob—Speed control knob
32	75372	Knob—Function control knob complete with spring
32A	——	Spring—Retaining spring for function control knob (included in 75372, ILL. 32)
33	75373	Washer—"C" washer for control knob (2 required)
34	75374	Bushing—Threaded bushing for speed control crank
35	75375	Escutcheon—Index escutcheon
36	75376	Belt—Rubber belt for motor drive shaft
37	75377	Screw—Motorboard mounting screws (2 required) (No. 1/4-20 x 1 3/8" round head—special)
38	30006	Screw—Set screw for turntable centerpost (No. 8 x 3/8" Allen head set screw)
39	75378	Spindle—Turntable spindle or centerpost
40	75379	Rod—Reject rod
41	——	Rivet—Mounting rivet for terminal board, ILL. 53
42	75380	Spring—Hairpin spring for idler wheel
43	75433	Washer—Dampening washer for idler wheel (2 required)
44	75382	Wheel—Idler wheel
45	75383	Spring—Tension spring for idler wheel
46	75384	Board—Motorboard complete with four mounting springs, pivot arm housing, record support housing, terminal board (ILL. 53) and mounting studs
47	75385	Washer—"C" washer for record support pivot shaft
48	75386	Grommet—Rubber grommet to mount motor (3 required)
49A	75333	Motor—117 volt, 60 cycle, complete with top plate, idler wheel and drive belt
49B	30870	Connector—2 contact male connector for motor leads
49C	75426	Plate—Motor top plate including speed change carriage, 3 mounting grommets and 1 speed change lever grommet
49D	75427	Retainer—Retainer ring for drive pulley and shaft
49E	75428	Washer—Felt washer
49F	75429	Pulley—Drive pulley and shaft assembly for 33-1/3 RPM
49G	75430	Carriage—Idler carriage
49H	——	Lockwasher—No. 6 internal teeth
49I	——	Terminal lug
49J	——	Screw—No. 6-32 x 2" round head machine screw to mount top plate to motor
49K	——	Screw—No. 6-32 x 2 1/8" round head machine screw to mount top plate to motor
49L	75431	Plate—Friction guide plate
49M	75432	Spring—Hairpin spring to mount idler carriage
49N	75433	Washer—Fibre washer
49P	——	Spacer—Metal spacer to mount top plate to motor
49Q	——	Lockwasher—No. 6 internal teeth
49R	——	Terminal lug
49S	——	Nut—No. 6 hex nut
50	75387	Cam—Main cam (including wire spring)
51	75388	Spring—Cam locater lever spring
52	75389	Pawl—Trip pawl
53	——	Board—Terminal board
54	——	Nut—Locknut for speed control crank threaded bushing
55	75390	Spring—Spacer spring for speed control crank
56	——	Bumper—Rubber bumper not stocked
57	75391	Washer—Fibre washer for control lever shaft
58	75392	Washer—"C" washer for mounting control lever
59	75393	Lever—Function control crank, link and lever assembly
60	75394	Pawl—Lower trip pawl
61	75395	Washer—Bronze washer (3/8" O.D.) for trip pawl shaft
62	75396	Washer—Steel washer (1/4" O.D.) for trip pawl shaft
63	75397	Washer—"C" washer for trip pawl
64	75398	Washer—Fibre washer (1/2" O.D.) for mounting main cam
65	75399	Washer—"C" washer for mounting main cam
66	75400	Switch—Power switch (includes cover)
67	——	Screw—Power switch mounting screw (No. 6-32 x 1/2" hex head)
68	75401	Spring—Return spring for control lever link
69	75402	Fastener—Push fastener to mount motor (3 required)
70	75403	Grommet—Rubber grommet for motor speed change tie rod (2 required)
71	75404	Lever—Trip slide lever
72	75405	Washer—Metal washer to mount trip slide
73	——	Screw—Mounting screw to mount trip slide lever (No. 4 x 1/4" hex head self-tapping)
74	75406	Crank—Speed control crank
75	75407	Rod—Motor speed change tie rod
76	75408	Screw—Pickup height adjusting screw (No. 6-32 x 1/4" pan head brass)
77	75409	Rod—Elevating rod
78	75410	Spring—Return spring for pickup arm
79	75411	Washer—Spring washer for clutch plate
80	75412	Plate—Clutch plate
81	75413	Washer—"C" washer for pickup arm pivot
82	75414	Shaft—Pickup arm pivot shaft
83	75415	Spring—Clutch safety spring
84	75416	Guide—Clutch safety spring guide
85	75417	Housing—Clutch housing
86	75392	Washer—"C" washer for clutch housing
87	75418	Spring—Conical spring for elevating rod
88	75419	Washer—"C" washer for elevating rod
89	75423	Rod—Lift arm stop rod complete with pins, ILL. 90
90	——	Pin—Mounting pin for stop rod (included in 75423—ILL. 89)
91	75420	Arm—Lift arm assembly complete with stop rod and stop rod mounting pins (includes ILL. 89 and ILL. 90)
92	75421	Washer—Fibre washer for lift arm shaft
93	——	Lug—Terminal lug
94	——	Screw—Mounting screw for lift arm assembly (No. 8-32 x 3/8" pan head screw)
95	75422	Washer—Retainer washer for lift arm shaft
96	——	Lockwasher—No. 8 lockwasher (internal teeth)

©John F. Rider

Compliments of www.nucow.com

MODEL VM-508222

OPERATING INSTRUCTIONS

PLACING RECORDS ON THE CHANGER: Raise the Record Support Arm straight up until it clears the Center Post. Then, turn this arm to the position shown in Fig. 1 so that it will not interfere with record loading.

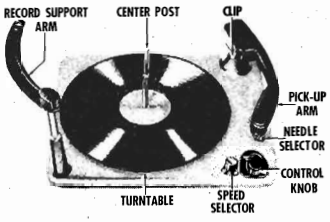

FIG. 1

Place records on the Center Post so that center of record rests on the "shoulder" or off-set in the post and hold them level in that position. While holding the records in this manner, turn Record Support Arm back over the records until the hole in the tip of the arm is over the Center Post. Then, lower the Support Arm and push it down gently until records are held parallel with Turntable (see Fig. 2). This completes the loading procedure and changer is now ready for automatic operation.

SETTING NEEDLE SELECTOR AND SPEED SELECTOR: Complete instructions for the proper setting of these controls are given in the chart at the bottom of this page.

STARTING THE CHANGER: Turn on the receiver before attempting to start the changer and be sure that controls on receiver control panel are properly set for phonograph operation.

To start the changer, turn the Control Knob (on changer) clockwise to the "ON" position. This will turn motor on and Turntable will start rotating. Continuing to turn Control Knob clockwise to "REJ." position starts the changing mechanism (do not attempt to hold the knob in this position; a momentary turn is all that is required). All records which are loaded on the changer will then be played in sequence. **After last record has been played the Pick-up Arm returns to its rest position and the changer will turn off automatically.**

CONTROLLING THE VOLUME: Use the volume control on the receiver control panel to adjust the volume of the phonograph.

CONTROLLING THE TONE: Use the tone control on the receiver control panel to select most pleasing tone.

REJECTING A RECORD: If you wish to stop playing a record and start playing the next one, merely turn Control Knob to "REJ." position.

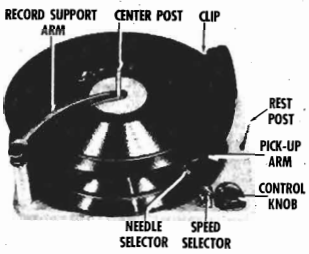

FIG. 2

STOPPING THE CHANGER: This record changer will stop automatically after last record is played. If you desire to stop the changer at any other time, merely turn Control Knob to "OFF" position. Then lift Pick-up Arm from record and place it on the Rest Post.

UNLOADING RECORDS: If some records remain above the off-set shoulder on the Center Post, it will be necessary to hold them steady before disturbing the Record Support Arm. Then raise the Support Arm straight up until it clears the Center Post and turn it to the position shown in Fig. 1. Records can now be removed by lifting them off the Turntable.

SETTING THE NEEDLE SELECTOR AND SPEED SELECTOR CONTROLS FOR VARIOUS TYPES OF RECORDS

TYPE OF RECORD TO BE PLAYED	NEEDLE SELECTOR Raise Pick-up Arm slightly and turn Needle Selector all the way (in the direction indicated by the arrow on Needle Selector Knob) to the position shown below:	SPEED SELECTOR Turn Speed Selector so that dot is opposite position shown below:	**RECORD CAPACITY Maxixmum number of records to be played at one loading.
10" or 12" 78 R.P.M. STANDARD	"78" should face up	White dot opposite "78"	Ten when intermixed; or ten 12"; or twelve 10"
10" or 12" 33⅓ R.P.M. "MICROGROOVE— LONG PLAYING"	"33-45" should face up	White dot opposite "{33 / 10"-12"}"	Ten when intermixed; or ten 12"; or twelve 10"
7" *45 R.P.M. "FINE GROOVE"	"33-45" should face up	White dot opposite "45"	Twelve 7"
7" 33⅓ R.P.M. "MICROGROOVE— LONG PLAYING"	"33-45" should face up	White dot opposite "{33 / 7"}"	Twelve 7"

* Insert adapter disc in center hole of this record. See envelope containing discs for instructions.

** Do not intermix "Standard"—78 R.P.M. with "Long Playing" (Microgroove) 33⅓ R.P.M. records.
Do not intermix "Standard"—78 R.P.M. with "Fine Groove"—45 R.P.M. records.
Do not intermix "Long Playing" (Microgroove) 33⅓ R.P.M. with "Fine Groove"—45 R.P.M. records.
Do not intermix 7" records with 10" or 12" records.

©John F. Rider

Compliments of www.nucow.com

MODEL VM-508222

DESCRIPTION OF CYCLE

In order to observe the operation of the changer mechanism, it is advisable to remove the Record Changer from the cabinet. This may be done by first disconnecting the Phono Motor Cable and Phono Pick-up Cable from the radio chassis. Then lift turntable off and note two hold down screws (See Fig. 16). Remove these screws by turning counter-clockwise. Unit is now free and may be lifted out from record changer compartment.

To observe the action of the changer mechanism as it progresses through a complete cycle of operation, turn the Control Knob to the "REJ." position and release it. As the turntable is rotated clockwise by hand, the motion of all parts of the changer can now be examined.

Numbers which appear after parts mentioned in text refer to parts shown in illustrations on pages 123, 124 and 125 unless otherwise indicated.

FUNCTION	EXPLANATION
SETTING FOR DESIRED NEEDLE AND NEEDLE PRESSURE	1. When the Needle Selector Knob (2) is turned so that the number "78" appears at the top, the Crystal Cartridge (6) is rotated, allowing the point of the correct Needle (4) to face down and contact the record. 2. Rotating the Needle Selector Knob (2) counter-clockwise 180° so that the numbers "33-45" appear at the top, turns the Crystal Cartridge (6) over, allowing the tip of the "Microgroove" Needle (5) to face down and contact the record. Rotating the Needle Selector Knob (2) in the counter-clockwise direction also draws up on Chain (9) which exerts a pull on Counter-Balance Pressure Spring (10). This spring is connected to Hinge Bracket (13) at rear of Pick-up Arm (1). The pulling action on Hinge Bracket (13) causes a pushing action against Hinge Assembly (16). This pushing action develops a counter-balance, allowing on 6½ to 9½ grams pressure of the needle on the record.
SETTING FOR DESIRED SPEED "Turret" Type Motors (See Page 123 for Illustration of Motors.)	1. When the Speed Knob (88) is in either "33-7" or "33-10"-12" " position, the motor shaft contacts small diameter Idler Pulley (64) which in turn contacts Idler Wheel (63). The wheel in this position drives Turntable (48) at 33⅓ R.P.M. 2. Turning Speed Selector Knob (88) counter-clockwise to the "78" position causes attached Speed Selector Rod (90) to actuate idler pulley mounting bracket. This bracket moves the large diameter Idler Pulley (65) so that it contacts motor shaft and Idler Wheel (63). The wheel in this position drives Turntable (48) at 78 R.P.M. 3. A further rotation of Speed Selector Knob (88) counter-clockwise to the "45" position causes attached Speed Selector Rod (90) to actuate and idler pulley mounting bracket so that the intermediate size Idler Pulley (66) contacts motor shaft and Idler Wheel (63). The wheel in this position drives Turntable (48) at 45 R.P.M.
SETTING FOR DESIRED SPEED "Belt" type motor (See Page 123 for Illustrations of Motor.)	1. When the Speed Selector Knob (88) is in the "78" position, motor shaft makes direct contact with Idler Wheel (63). The wheel in this position drives Turntable (48) at 78 R.P.M. 2. Turning Speed Selector Knob (88) clockwise to the either "33-7" or "33-10"-12" "position causes attached Speed Selector Rod (90) to actuate idler pulley mounting bracket. This bracket moves the large Idler Pulley (64) so that it pushes Idler Wheel (63) away from motor shaft. The lower Drive Belt (68) transfers power from the motor shaft to Idler Pulley (64). With Idler Wheel in this position, it drives Turntable (48) at 33⅓ R.P.M. 3. Turning Speed Selector Knob (88) counter-clockwise all the way to the "45" position causes attached Speed Selector Rod (90) to actuate idler pulley mounting bracket. This bracket moves large Idler Pulley (64) out of engagement with Idler Wheel (63). As the bracket completes its movement, it brings small Idler Pulley (66) into contact with Idler Wheel (63). The upper Drive Belt (68) transfers power from the motor shaft to Idler Pulley (66). With Idler Wheel (63) in this position, it drives Turntable (48) at 45 R.P.M.
STARTING Turn Control Knob (52) to the "ON" position.	1. Actuates Control Link Assembly (54). 2. Power Switch (61) is turned on. 3. Motor (62) operates Idler Wheel (63), to rotate Turntable (48) and attached gear at hub.
CYCLING Turn Control Knob (52) to "REJ." position.	1. Actuates Control Link Assembly (54). 2. Control Lever (57) and attached Manual Trip Rod (33) pushes Clutch Pawl (79). 3. Clutch Pawl (79) engages a projection on hub of Turntable (48). 4. Main Cam Assembly (81) is rotated so that its teeth engage gear on hub of Turntable (48).
FUNCTION OF MAIN CAM ASSEMBLY (81)	1. The heart-shaped groove in the Main Cam Assembly (81) directs and coordinates the motion of the Lift Arm Assembly (83). While the Main Cam Assembly (81) makes one half of a revolution, it swings Lift Arm Assembly (83) in one direction. During the remaining half of the revolution it swings the Lift Arm Assembly (83) in the opposite direction until the arm returns to its starting position. 2. During the revolution of Main Cam Assembly (81), the Clutch Pawl (79) is reset due to wiping action of Trip Pawl (76) against the hub of the Lift Arm Assembly (83). 3. At the completion of the revolution of Main Cam Assembly (81), the Stop Pawl (75) fits between two locating pins on under side of Base Plate (25). This holds cam in a position so that its open periphery is adjacent to the gear on the hub of the Turntable (48).
DISPLACEMENT OF A RECORD	1. As the Lift Arm (83) goes through its swing, an inclined plane on the arm, pushes up Center Post Roller (44) and attached push-up rod inside Center Post (43). 2. Ejector Lever (45) moves up and then out, pushing bottom record off shoulder of the Center Post (43) and allowing it to drop to the Turntable (48). 3. As the Lift Arm Assembly (83) makes its return swing, the incline plane lowers Center Post Roller (44) and attached push-up rod. 4. Ejector Lever (45) moves down, while still in the ejected position, thus gently lowering the remainder of stack of records.

©John F. Rider

Compliments of www.nucow.com

DESCRIPTION OF CYCLE (Continued)

FUNCTION	EXPLANATION
PICK-UP ARM MOVEMENT	1. As the Lift Arm Assembly (83) goes through its swing, an inclined plane on the opposite end of the arm from the Center Post (43) pushes up on Lift Rod (37), causing the Pick-up Arm (1) to rise. 2. Height of Pick-up Arm (1) may be changed by shifting the Height Adjustment Screw (36) — for complete adjustment details, see section of "Trouble Shooting Chart" entitled "Pick-up Arm Lift is too high or too low." 3. Lift Arm (83) also controls lateral motion of Pick-up Arm (1) by engaging a stud on lower part of Locator Housing (35).
Function of Safety Spring (32).	1. Pick-up Arm (1) is attached to Hinge Assembly (16). Hinge Locking Ring (11) holds Hinge Assembly (16) and Hinge Bearing (22) in their proper positions by a pair of Adjustment Screws. Hinge Bearing (22) and Pick-up Arm Locator Assembly (30) are held by Set Screw (21). The lower end of Pick-up Arm Locator (30) fits into the Locator Housing (35) and is held against a stop by Safety Spring (32). 2. If Pick-up Arm (1) is held during a change cycle, the Safety Spring (32) will allow Locator Housing (35) to move without damage to the changer mechanism.
Set Down Point; 7" or 10" Record.	1. Setting of Speed Selector Knob (88) actuates Index Rod (96) which positions Locator Cam (97). 2. As Lift Arm (83) reaches its maximum forward excursion, it contacts and pushes on the bent down projection of Set Down Locator (28). This moves locator around so that a dimple on its face fits into a detent on Locator Housing (35). 3. Half way through the return sweep, the Lift Arm (83) disengages from stud on lower part of Locator Housing (35). The Return Spring (26) forces over the Set Down Locator (28) and Locator Housing (35) until a projection on Set Down Locator (28) contacts Locator Cam (97), as shown in Figs. 13 and 17. Fig. 13 shows Set Down Locator (28) contacting Locator Cam (97) for 10" operation while Fig. 17 shows these parts in proper position for 7" operation. As movement of Pick-up Arm (1) is coordinated with Locator Housing (35), the arm is swung over the record to the correct set down point. 4. The completion of the return swing of Lift Arm (83) lowers Lift Rod (37), thus allowing needle to set down on the record. 5. Locator Housing (35) and Set Down Locator (28) are separated. The clearance between these two parts permits Pick-up Arm (1) to track across the record. 6. Set down point of Pick-up Arm (1) may be changed by shifting the position of Hinge Assembly (16) with respect to Hinge Bearing (22). This position may be changed by turning Adjustment Screws in Hinge Locking Ring (11) — for complete adjustment details see section of "Trouble Shooting Chart" entitled "Pick-up Arm (1) sets down at wrong starting point when playing 10" records."
Set Down Point; 12" Record.	For 12" operation, Speed Selector Knob (88) must be in either "33-10"-12"" or "78" position, depending upon the type of record to be played. 1. As a 12 inch record drops to the turntable it passes and hits Trip Lever (17) at rear of Pick-up Arm (1). 2. Index Cam (18) is actuated. This in turn changes the position of Index Lever (20) and holds the lever in this new position. 3. Leg of Index Lever (20) slides into "12 inch Stop" (see Fig. 8) as Ratchet Arm (35) turns Hinge Locking Ring (11) counter-clockwise until position of Fig. 6 is assumed. 4. This provides the correct position of Pick-up Arm (1) with respect to Set Down Locator (28) for proper 12" operation.
CHANGING A RECORD **Action of Trip mechanism during playing portion and at end of record.**	1. During the playing portion of the record, Pick-up Arm (1) proceeds laterally across the record. A projection on side of Locator Housing (35) contacts and exerts a constant pressure on Automatic Trip Link (34). This pressure is transferred to the Trip Pawl (76) (see Fig. 17) which in turn controls the Clutch Pawl (79) thru the "friction grip" action of Spring Washer (77). 2. As the needle proceeds across the record, the lateral movement per revolution is only equal to the space between two playing grooves. This amount of movement is insufficient to bring the Clutch Pawl (79) into engagement with the projection on hub of Turntable (48). Instead, the projection has a wiping action to push the Clutch Pawl (79) away from the hub. 3. When the needle enters the spiral groove, at the end of a record, the rate of advance of Pick-up Arm (1) toward the Center Post (43) is greatly accelerated. This increase in rate of lateral movement is sufficient to bring Clutch Pawl (79) into engagement with projection on hub of Turntable (48), thus causing "CYCLING." 4. Any movement of the Pick-up Arm (1), that causes a lateral movement greater than the space between two playing grooves, such as raising the arm and moving toward the Center Post (43), will cause tripping action.
REJECTING A RECORD **Turn Control Knob (52) to "REJ." position.**	1. This starts the change cycle as described in preceding section entitled "CYCLING" and permits next record to be played.
AUTOMATIC SHUT-OFF	1. Dropping of the last record onto the turntable lowers the Record Support Arm (40) so that it rests on the off-set shoulder of the Center Post (43). The hole in tip of Support Arm (40) is small enough to prevent Ejector Lever (45) from pushing all the way out on the next change cycle. 2. The brass bushing just above Center Post Roller (44) does not go all the way up as in a normal change cycle but is in the path of one end of the Automatic Shut-Off Rod (86). This rod is attached to Lift Arm Assembly (83) and therefore as arm swings in, the tip of the rod contacts the brass bushing and is turned 90°. See Fig. 14. 3. The other end of the rod is also turned 90° and is in a position so that it will engage and push Control Lever (57) when Lift Arm Assembly (83) makes its return sweep. 4. Control Lever (57) actuates Switch (61), shutting off the record changer. 5. Control Lever (57) also engages Set Down Locator (28) and holds it as shown in Fig. 5. This causes the Pick-up Arm (1) to set down on the rest post.
STOPPING **Turn Control Button (52) to "OFF" position.**	1. Turns Switch (61) to off position and Motor (62) stops.

©John F. Rider

Compliments of www.nucow.com

MODEL VM-508222

TROUBLE SHOOTING CHART

Numbers which appear after parts mentioned in text refer to parts shown in illustrations on pages 123, 124 and 125 unless otherwise indicated.

SYMPTOM	CAUSE	REMEDY
Control Knob (52) cannot be turned to "ON" position.	1. Changer was shut off while changing a record.	Rotate Turntable (48) one turn clockwise by hand and turn Control Knob (52) on again.
Turntable fails to start after turning Control Knob (52) to the "ON" position.	1. Changer was shut off while changing a record.	Rotate Turntable (48) one turn clockwise by hand.
	2. No power.	Check to determine if there is power at the wall outlet by disconnecting receiver power cord and connecting a lamp to same outlet.
	3. Speed Selector Knob (88) set midway between any of its four "indexed" positions. The above does not apply to changer equipped with the belt type motor.	While changing from one speed to another, there is a position where the motor shaft momentarily does not contact any of the Idler Pulleys (64), (65), or (66), and if the Speed Selector Knob (88) is left in this position, Turntable (48) will not rotate. Be sure that knob is correctly "indexed" to the desired setting.
	4. Idler Wheel (63) not engaging Turntable (48).	Check for any binding action of lever on which Idler Wheel (63) is mounted. Also be sure that Spring (72) which pulls Idler Wheel (63) against Turntable (48) is hooked to motor frame and has sufficient tension.
	5. Defective On-Off Switch (61).	Check continuity across switch contacts. Replace switch if necesary.
	6. Defective Motor.	Remove Turntable (48) so that there will be no load on Motor and check to see if Idler Wheel (63) rotates. Replace Motor (62) if found defective.
	7. Grease on Idler Wheel (63), Idler Pulleys (64), (65) or (66), (or Drive Belts (68)) or rim of Turntable (48).	Clean with carbon tetrachloride.
	8. Binding in changer mechanism.	For analysis of fault see symptom entitled "Changer stops while changing a record."
Changer refuses to cycle when Control Knob (52) is turned to "REJ." position.	1. Manual Trip Rod (33) not contacting Clutch Pawl (79).	Check to see that Manual Trip Rod (33) is hooked into hole in Control Lever (57) and that it is contacting Clutch Pawl (79) on Main Cam Assembly (81).
	2. Clutch Pawl (79) binding on face of Main Cam Assembly (81).	Check for burrs or foreign matter lodged between Clutch Pawl (79) and cam. **Do not oil.**
	3. Lift Arm (83) not turning during cycle.	Check for broken roller on Lift Arm Assembly (83); roller is located on end of Lift Arm which engages Cam assembly (81). If this is the case, replace Lift Arm Assembly (83).
Changer stops while changing a record.	1. Idler Wheel (63) not engaging Turntable (48) properly.	Be sure that Spring (72) which pulls Idler Wheel (63) against Turntable (48) has sufficient tension.
	2. Grease on Idler Wheel (63), Idler Pulleys (64), (65) or (66), (or Drive Belts (68)) or rim of Turntable (48).	Clean with carbon tetrachloride.
	3. Turntable (48) and Bearing Race (50) binding.	Remove Turntable (48). Check to see if Turntable Washer (49) and Bearing Race (50) are free to rotate. If binding does occur remove Center Post (43) by loosening Set Screw (47) and withdrawing Center Post (43) from the top. Binding of Bearing Race (50) may now be released. Before replacing Turntable (48) clean bearing surfaces.
	4. Operating temperature too low.	If changer has been stored in a cold place or operated in surroundings at a temperature of less than 60° F., the turntable speed may be too slow.
	5. Low line voltage.	Line voltage should not be less than 105 volts.
	6. Binding in drive mechanism.	To check for binding proceed as follows: a. Remove Lift Arm Assembly (83) by taking out Screw (85). b. Remove Idler Wheel (63). c. Turn Control Knob (52) to "REJ." position and rotate Turntable very slowly by hand through one change cycle, checking for any binding action. If binding occurs check for: foreign matter in the gear teeth of Main Cam Assembly (81); bent main cam bearing; bent center post bushing. Also check for clearance between Main Cam (81) and Automatic Trip Link (34). A projection on the hub of Main Cam Assembly (81) should contact and push Automatic Trip Link (34). Thus the link is reset for the next playing cycle. There should be no binding during this action. Bending of Automatic Trip Link (34) may be required. If no binding occurs proceed as follows: d. Remove "C" Washer (39) and Spring (38). e. Raise Pick-up Arm (1) and withdraw Lift Rod (37). f. Replace Lift Arm Assembly (83). g. Loosen Set Screw (47) so that inclined plane of Lift Arm Assembly (83) will push up the complete Center Post (43). h. Turn Control Knob (52) to "REJ." position and rotate Turntable very slowly by hand through one change cycle, checking for binding action. If binding does occur check lift arm bearing for freedom of movement and lift arm roller to be sure it is not bent, causing binding in the heart-shaped groove in the Main Cam Assembly (81).

© John F. Rider

Compliments of www.nucow.com

MODEL VM-508222

TROUBLE SHOOTING CHART (Continued)

SYMPTOM	CAUSE	REMEDY
	7. Binding between Lift Rod (37) and inclined plane of Lift Arm Assembly (83).	To check for this action proceed as follows: a. Replace Lift Rod (37) and Spring (38) taken off in steps 6d and 6e. b. Leave Center Post (43) in same position as in step 6g. c. Turn Control Knob (52) to "REJ." position and rotate Turntable (48) by hand until Lift Arm Assembly (83) has moved in one direction as far as it will go and is about to return. d. Raise Lift Rod (37) by pulling up. It may still be contacting the inclined plane of Lift Arm Assembly (83) but it should not bind. If binding does occur, check for bent lift arm bearing shaft. It may be necessary to remove Fibre Washer (84), which may be under Lift Arm Assembly (83), to lower the arm.
	8. Center Post Roller (44) being compressed too far.	To check for this action proceed as follows: 1. Replace Center Post (43) released for steps 6g and 7b. 2. Turn Control Knob (52) to "REJ." position and rotate Turntable very slowly by hand until Center Post Roller (44) reaches position on inclined plane of Lift Arm Assembly (83) illustrated in Fig. 3. It will be noted that "Brass Bushing" has also risen but at this point stops. A further movement of Lift Arm Assembly (83) causes roller shaft to move up into "Brass Bushing" a distance not to exceed 1/16". Should the latter movement exceed this, it may cause the Lift Arm Assembly (83) to bind due to excessive pressure. In that event check the following: a. Bearing for Lift Arm Assembly must be square with the changer Base Plate (25). b. Remove any fibre washer between metal washer and bottom of Lift Arm Assembly (83). c. Center Post may be too long. The critical 1 1/8" dimension shown in Fig. 9 should not be exceeded. 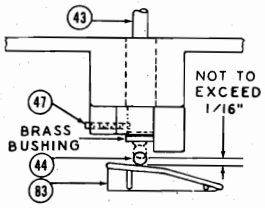 FIG. 3
	9. Weak Motor (62).	After checking the preceding eight items and relieving any binding action, replace Idler Wheel (63). Should the changer then continue to stop during a change cycle, it may be assumed that the motor is weak (has low torque) and should therefore be replaced.
Changer cycles continuously.	1. Control Link Assembly (54) in reject position.	Check for loose, unhooked or missing Reject Spring (58).
	2. Stop Pawl (75) not engaging projections in Base Plate (25).	Check for loose, unhooked Stop Pawl Spring (74).
	3. Trip Pawl (76) binding.	Check for burrs or foreign matter lodged between Trip Pawl (76) and face of Main Cam (81). **Do not oil.**
	4. Insufficient "friction grip" between Clutch Pawl (79) and Trip Pawl (76).	The "friction grip" between Clutch Pawl (79) and Trip Pawl (76) should be sufficient so that the slightest movement of the Trip Pawl (76) causes a corresponding movement in the Clutch Pawl (79). This is especially true during the change cycle where the Trip Pawl (76) is being reset to the playing position. See Item 2 in section entitled "Function of Main Cam Assembly (81)" on page 115. It may be necessary to add a thin washer between "C" Washer (78) and Spring Washer (77) to increase this "friction grip".
Changer cycles before record is finished playing.	1. Hole in record too large.	Record with badly worn center hole may cause playing grooves to rotate with an eccentric motion thus effecting an oscillating movement of the Pick-up Arm (1).
	2. Binding between Clutch Pawl (79) and Trip Pawl (76).	The "friction grip" between Clutch Pawl (79) and Trip Pawl (76) should be sufficient so that the slightest movement of either one would cause a corresponding movement in the other. Yet, this "friction grip" or binding between these two parts must not be so great as to prevent a "slipping" or clutch action. As the constant tripping pressure is applied to the Trip Pawl (79) by the Trip Lever (76) there should be enough clutch action to permit the projection of the hub of the Turntable (48) to move Clutch Pawl (79) away from hub. For a complete description of this action refer to "CHANGING A RECORD" in section entitled "DESCRIPTION OF CYCLE" on page 116.
	3. External lateral movement of Pick-up Arm (1).	Anything that might cause the Pick-up Arm (1) to move laterally more than the distance between two playing grooves of a record, such as a sudden jar, could start the change cycle.
Changer fails to cycle after playing a record.	1. Record has no eccentric groove.	Old style records which do not have this spiral tripping groove cannot be played automatically.
	2. Needle (6) jumping out of eccentric groove.	Eccentric groove too shallow. Check with a record which is known to have a good groove. Needle badly worn or bent. Replace.
	3. Movement of Locator Housing (35) not following lateral movement of Pick-up Arm (1).	Check for loose Hinge Bearing Set Screw (21). Retighten this screw after repositioning Hinge Bearing (22) as outlined in Item 3 in section entitled "Pick-up Arm (1) sets down at wrong starting point when playing 10" records."
	4. Automatic Trip Link (34) not making contact.	Check to see that, as Pick-up Arm (1) approaches spiral tripping groove of record, one end Automatic Trip Link (34) is making contact with projection on side of Locator Housing (35) and other end is contacting Trip Pawl (76) as illustrated in Fig. 17. Bend Automatic Trip Link (34) to proper shape or replace with new link.

©John F. Rider

Compliments of www.nucow.com

MODEL VM-508222

TROUBLE SHOOTING CHART (Continued)

SYMPTOM	CAUSE	REMEDY
	5. Clutch Pawl (79) binding on face of Main Cam Assembly (81).	Check for burrs or foreign matter lodged between the Clutch Pawl (79) and cam. **Do not oil.**
Pick-up Arm lift is too high or too low; **OR** **Needle fails to contact first record;** **OR** **Top of Pick-up Arm strikes stack of records while changer is cycling;** **OR** **Pick-up Arm strikes Rest Post.**	1. Height Adjustment Screw (36) is incorrectly set.	To adjust height proceed as follows: a. Turn Control Knob (52) to the "REJ." position and rotate Turntable (48) clockwise by hand until Pick-up Arm (1) swings over the Rest Post. b. Raise Pick-up Arm (1) and note Height Adjustment Screw (36). (See Fig. 4.) c. Hold Lift Rod (37) steady and turn adjustment screw clockwise to lower Pick-up Arm and counter-clockwise to raise the arm. d. Raise or lower Pick-up Arm (1) as required until lower edge of Pick-up Arm (1) is ¼" above the top of the Rest Post.
Pick-up Arm (1) sets down at wrong starting point when playing 10" records. **NOTE: If set down point is erratic or differs occasionally, then see symptom and analysis entitled "Pick-up Arm does not set down at same position consistently."**	1. Improper setting of Pick-up Arm.	Before checking for proper set down point of Pick-up Arm (1), be sure Speed Selector Knob (88) is set to either "33-10"-12"" or "78" position and that Locator Cam (97) is in the position shown in Fig. 13. If cam is improperly set, refer to Item 1 in section entitled "Pick-up Arm (1) sets down in 7" position when playing 10" or 12" records." Place a 10" record on Turntable. Turn Control Knob (52) to "REJ." position. Rotate Turntable by hand until tip of Needle (4) is within ¼" of top of record. Raise Pick-up Arm (1) and be sure that leg of Index Lever (20) is in the first step of the Hinge Locking Ring (11) as shown in Fig. 4. If this is not set correctly, see Item 2 in section entitled "Pick-up Arm (1) sets down in 12" position when playing 10" records." 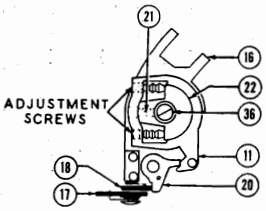 FIG. 4
	2. Improper Adjustment of Pick-up Arm (1).	If Index Lever (20) is properly positioned in the first step of Hinge Locking Ring (11) then proceed as follows: a. If needle is setting too far out on edge or off record, loosen the **back** "Adjustment Screw" about ¼ turn and tighten front screw to lock adjustment in place. b. If needle is setting too far in on the record, loosen the **front** "Adjustment Screw" about ¼ turn and tighten back screw.
	3. Hinge Bearing (22) not in proper position with respect to Locator Housing (35).	To reset Hinge Bearing (22) to proper position, proceed as follows: a. With power disconnected, swing point of Set Down Locator (28) and engage it with arm of Control Lever (57) as shown in Fig. 5. b. Lift Pick-up Arm (1) and loosen Set Screw (21) (see Fig. 4). Note: It may be necessary to line up hole in Hinge Locking Ring (11), by moving "Adjustment Screws" to gain access to Set Screw (21). c. Turn Locator Housing (35) until dimple on face of Set Down Locator (28) is opposite detent in Locator Housing (35). 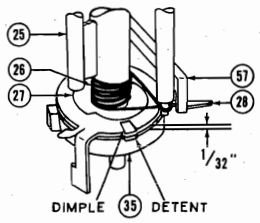 FIG. 5 d. Place a 1/32" shim between Locator Housing (35) and Set Down Locator (28). Take up all the play between the parts by pressing up on the bottom of Locator Housing (35) and down on the top of Hinge Bearing (22). Be sure that Hinge Bearing (22) is turned **counter-clockwise as far as it will go.** Now tighten Set Screw (21). e. Recheck set down point of Pick-up Arm (1) by referring to adjustments described in Items 2a and b above.
	4. Broken or loose Return Spring (26).	Check for broken or unhooked Return Spring (26). Replace or rehook into position as shown in Fig. 5, with one end of spring hooked around Set Down Locator (28) and other end of spring hooked around leg of Base Plate (25).
Pick-up Arm (1) sets down at wrong point when playing 12" records.	1. Record too small.	Before checking for proper set down point of Pick-up Arm (1), be sure Speed Selector Knob (88) is set to either "33-10"-12"" or "78" position and that Locator Cam (97) is in the position shown in Fig. 13. If cam is improperly set, refer to Item 1 in section entitled "Pick-up Arm (1) sets down in 7" position when playing 10" or 12" records." As a 12" record drops off the off-set in the Center Post (43) it should hit Trip Lever (17) as it passes the Pick-up Arm. Standard 12" records should be used. They should have a diameter of 11⅞" plus or minus 1/32".
	2. Record wobbles and fails to hit Trip Lever (17) when dropping.	Check Items 1, 2 and 3 in section entitled "12" record drops and wobbles, failing to hit Trip Lever (17)."
	3. Trip Lever (17) **above** its normal horizontal position and record does not hit lever.	Check to see if spring on Trip Lever (17) is loose or broken and rehook or replace in position as shown in Fig. 4.

©John F. Rider

Compliments of www.nucow.com

MODEL VM-508222

TROUBLE SHOOTING CHART (Continued)

SYMPTOM	CAUSE	REMEDY
	4. Trip Lever (17) **below** its normal horizontal position and record does not hit lever.	To check this condition proceed as follows: a. Turn Control Knob (52) to "REJ." position and rotate Turntable (48) by hand until Pick-up Arm is about to start return toward the record. b. Depress Trip Lever (17) momentarily. There should be a slight shift in the position of Pick-up Arm (1). c. Raise Pick-up Arm (1) and check to see if there is a clearance of about 1/64" between Index Lever (20) and Index Cam (18) as shown in Fig. 6. Should the clearance be insufficient, file the edge of Index Lever (20) closest to the Index Cam (18). d. Should the space be adequate, check for loose or broken spring on Index Cam (18) and replace or rehook as shown in Fig. 6. 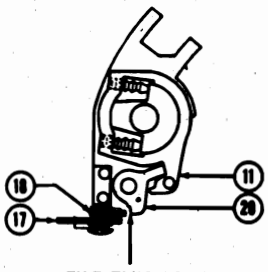 **FILE THIS EDGE FOR 1/64" CLEARANCE** **Refer to Step 4c in this section.** **FIG. 6**
	5. Record with too large a center hole.	This will produce the same effect as an undersize record, described in Item 1 above.
	6. Loose or missing Index Spring (19).	Check for loose or missing Index Spring (19) and replace or rehook in position as shown in Fig. 7.
	7. Pick-up Arm not properly adjusted.	If 12" record hits Trip Lever (17) properly and Pick-up Arm lands at wrong starting point, Pick-up Arm may not be properly positioned. This adjustment must be made while changer is set for 10" operation. Refer to Items 2a and b in section entitled "Pick-up Arm (1) sets down at wrong starting point when playing 10" records."
Pick-up Arm (1) sets down at wrong point when playing 7" records.	1. Locator Cam (97) improperly set.	Before checking for proper set down point of Pick-up Arm (1) be sure Speed Selector Knob (88) is set to either "33-7" " or "45" position and that Locator Cam (97) is in the position shown in Fig. 17. If cam is improperly set, refer to Item 1 in section entitled "Pick-up Arm (1) sets down in 7" position when playing 10" or 12" records."
	2. Pick-up Arm (1) not properly adjusted.	If Locator Cam (97) is correctly set and Pick-up Arm (1) lands at wrong starting point, Pick-up Arm may not be properly positioned. This adjustment must be made while changer is set for 10" operation. Refer to Items 2a and 2b in section entitled "Pick-up Arm (1) sets down at wrong starting point when playing 10" records."
Pick-up Arm (1) sets down in 10" position when playing 12" records.	1. Index Lever does not slide down incline and assume the position shown in Fig. 6.	Be sure that record has hit Trip Lever (17) as it dropped past Pick-up Arm. Also check Items 2, 3 and 5 in section entitled "Pick-up Arm (1) sets down at wrong starting point when playing 12" records." Should the above fail to correct the condition, file about 1/64" bevel on corner of Index Lever (20) (see Fig. 7 for location). Be careful not to round off end.
Pick-up Arm (1) sets down in 12" position when playing 10" records.	1. Index Spring (19) broken or missing. 2. No clearance between Hinge Locking Ring (11) and Index Lever (20). This may be due to one of the following: a. Hinge Bearing (22) not in proper position with respect to Locator Housing (35). b. Projection on Hinge Assembly (16) defective.	Check for broken or missing Index Spring (19) and replace or rehook in position as shown in Fig. 7. In order to check for proper clearance, first turn Control Knob (52) to "REJ." position and rotate Turntable (48) by hand until Lift Arm Assembly (83) has moved in one direction as far as it will go and is about to return. Now raise Pick-up Arm (1) and check to see if there is a clearance of about 1/64" between Index Lever (20) and Hinge Locking Ring (11). (See Fig. 7 for location.) a. If this gap is not present, it will be necessary to check the setting of the Hinge Bearing (22) by referring to Item 3 in section entitled "Pick-up Arm (1) sets down at wrong starting point when playing 10" records." b. Should the above remedy fail to provide the required gap it will be necessary to check the projection at base of Hinge Assembly (16). Also check for binding between Hinge Bearing (22) and body of Hinge Assembly (16). This may be accomplished by disassembling Pick-up Arm mechanism as described under heading "Top Assembly" in section entitled "Procedure for Removal and Replacement of Major Parts." 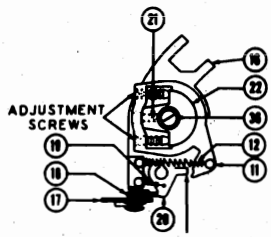 **FILE THIS CORNER** **Refer to Item 1 in section entitled "Pick-up Arm (1) sets down in 10" position when playing 12" records."** **FIG. 7**
Pick-up Arm (1) sets down in 7" position when playing 10" or 12" records. **OR** **Pick-up Arm (1) sets down in 10" position when playing 7" records.**	1. Locator Cam (97) not in proper position with respect to Speed Selector Knob (88).	When Speed Selector Knob (88) is set to either the "78" or "33-10"-12" " position, the Locator Cam should be so placed that the projection on Set Down Locator (28) contacts cam as shown in Fig. 13. With Speed Selector Knob (88) set to either "45" or "33-7" " position, the Locator Cam (97) should be so placed that the projection on Set Down Locator (28) contacts the shaft of the cam as shown in Fig. 17. If this is not the case check the following: a. Index Rod (96) not properly connected to Locator Cam (97). b. Index Rod (96) not properly shaped. See Fig. 17 for shape. c. Arm at base of Speed Selector Shaft (89) not properly staked.

©John F. Rider

Compliments of www.nucow.com

MODEL VM-508222

TROUBLE SHOOTING CHART (Continued)

SYMPTOM	CAUSE	REMEDY
Pick-up Arm (1) sets down correctly for 7" and 10" records but incorrectly for 12" records. **OR** **Pick-up Arm (1) sets down correctly for 12" records but incorrectly for 7" and 10" records.**	1. Distance, that controls 10" and 12" indexing, is incorrect.	Be sure that Pick-up Arm (1) has been properly adjusted as described under Items 2a and b in section entitled "Pick-up Arm sets down at wrong starting point when playing 10" records." Now, with a 12" record in place, operate changer as described in Instruction Section. If the Pick-up Arm (1) approaches the record, but lands too far on the record, it will be necessary to file the "12" stop" deeper. (See Fig. 8.) If the Pick-up Arm (1) approaches the record, but lands to the right of it, it will be necessary to file the "10" stop" deeper. (See Fig. 8.) After each filing operation, carefully readjust set down point as described in Items 2a and b in section entitled "Pick-up Arm sets down at wrong starting point when playing 10" records." 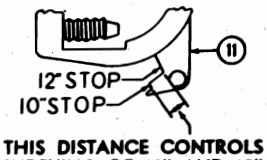 **THIS DISTANCE CONTROLS INDEXING OF 10" AND 12" RECORDS.** **FIG. 8**
Pick-up Arm (1) does not set down at same position consistently.	1. Ring Spring (12) broken or missing. 2. Binding between Safety Spring (32) and Locator Housing (35). 3. Broken or loose Return Spring (26). 4. Locator Cam (97) not in proper position with respect to Speed Selector Knob (88).	Check for broken or missing Ring Spring (12) and replace or rehook in position as shown in Fig. 7. To check for binding between these parts it will first be necessary to disassemble Pick-up Arm mechanism as described under heading "Bottom Assembly" in section entitled "Procedure for Removal and Replacement of Major Parts." Binding may now be checked by holding shaft of Pick-up Arm Locator (30) in one hand and turning Locator Housing (35) with other. Check to see that locator is returned all the way to the stop in Locator Housing (35). A further check may be made by removing Safety Spring (32) and by rotating Pick-up Arm Locator (30) and again checking for any binding action. Remove all burrs and sharp edges on both locator and spring. After reassembling be sure to properly set position of Locator Housing (35) in manner described in Item 3 in section entitled "Pick-up Arm (1) sets down at wrong starting point when playing 10" records." Check for broken or unhooked Return Spring (26). Replace or rehook into position as shown in Fig. 5 with one end of spring hooked around Set Down Locator (28) and other end of spring hooked around leg of Base Plate (25). Check Item 1 in section entitled "Pick-up Arm (1) sets down in 7" position when playing 10" or 12" records."
Pick-up Arm remains on Rest Post after changing a record.	1. Hinge Bearing (22) not in proper position with respect to Locator Housing (35). 2. Bent down projection of Set Down Locator (28) not properly shaped.	Check Item 3 in section entitled "Pick-up Arm (1) sets down at wrong starting point when playing 10" records." Check to be sure that bent down projection of Set Down Locator (28) is pointing straight down as shown in Figs. 5 and 14. To determine the correct action of Set Down Locator, refer to "Description of Cycle," Item 2 in section entitled "Set down point; 7" or 10" records." If necessary, reshape the bent down projection or replace with new Set Down Locator (28).
Improper "tracking" of needle on record—needle slips out of grooves and skips portions of record.	1. Incorrect setting of Needle Selector Knob (2). 2. Foreign matter in record grooves. 3. Needle (4) or (5) not contacting record grooves. 4. Badly worn records due to one of the following: a. Deep Scratches on the record. b. Needle Selector Knob (2) improperly set. c. Broken or unhooked Chain (9) and/or Counter Balance Pressure Spring (10).	Setting of Needle Selector Knob (2) to the correct position to correspond with type of record being played is vitally important — the knob should be turned so that the numbers "78" appear at the top when playing standard (78 R.P.M.) type records; it should be turned so that numbers "33-45" appear at the top when playing "Long Playing" (microgroove — 33⅓ R.P.M.) or "Fine groove" (45 R.P.M.) records. Clean record with record brush or camel's hair brush. Be sure that front part of Pick-up Arm (1) is not contacting record. Should this be the case, it will be necesary to slightly bend needle so that its tip protrudes beyond Crystal Cartridge (6). Do not bend needle while mounted in Crystal Cartridge (6). Remove Needle (4) or (5) as outlined in section entitled "Procedure for Removal and Replacement of Major Parts" on Page 128. To check for these conditions proceed as follows: a. Examine record for scratches that may have destroyed continuity of grooves. b. If records had been played with Needle Selector Knob (2) set improperly (for correct setting see Item 1 in this section), the needle may have destroyed the continuity of the grooves to such an extent that they can no longer be used. c. The action of parts may be observed by raising Pick-up Arm (1) and turning Needle Selector Knob (2). As knob is turned counter-clockwise toward the "33-45" position, Chain (9) is pulled up around hub on Pivot Assembly (8). This pull should be transmitted to the Counter Balance Pressure Spring (10) which is attached to Hinge Bracket (13). Should it become necessary to replace or rehook the Chain (9) or Spring (10) it may be accomplished by first taking out the four screws that retain the Pivot Assembly (8). In reassembling Pivot Assembly (8), care should be exercised to properly route Chain (9) to insure smooth operation of Needle Selector Knob (2). With the Needle Selector Knob (2) set so that the numbers "33-45" appear at the top, Chain (9), which is attached to hook on hub of Pivot Assembly (8), should go around hub in a clockwise direction, around projection in Pick-up Arm (1) and along side of the arm.

© John F. Rider

Compliments of www.nucow.com

MODEL VM-508222

TROUBLE SHOOTING CHART (Continued)

SYMPTOM	CAUSE	REMEDY
	5. Needle pressure too light when playing "Long Playing" (microgroove) records.	If needle skips grooves while playing "Long Playing" (microgroove) or "Fine groove" records, it may be due to Pick-up Arm (1) not having enough pressure — less than 6½ grams. Should this pressure be found to be too light after checking it with a sensitive gram scale, the leg of Hinge Bracket (13) on which the Counter Balance Pressure Spring (10) is hooked, should be bent backward. **CAUTION:** Bend slowly and carefully as only a slight change is required. Too much pressure can cause excessive record wear.
	6. Badly worn or bent Needle (4) or (5).	Examine needle for worn or bent tip and replace if necessary. To replace needle refer to section entitled "Procedure for Removal and Replacement of Major Parts."
	7. Locator Housing (35) not disengaging from the Set Down Locator (28) when a change cycle is complete.	There should be a space of approximately 1/32" between these parts at the end of a change cycle. If this space is lacking, see Fig. 5 as well as Item 3 in section entitled "Pick-up Arm (1) sets down at wrong starting point when playing 10" records."
	8. Binding between Hinge Bearing (22) and Hinge Assembly (16).	Check for binding between Hinge Bearing (22) and body of Hinge Assembly (16) by disassembling Pick-up Arm mechanism as described under heading "Top Assembly" in section entitled "Procedure for Removal and Replacement of Major Parts."
	9. Shallow eccentric groove.	Try a record which is known to have a good groove.
Pick-up Arm does not return to Rest Post after last record has been played.	1. Control Lever (57) not engaging Set Down Locator (28).	On return sweep of Lift Arm (83) the upturned end of Automatic Shut-off Rod (86) should contact and actuate Control Lever (57) so that leg on lever engages Set Down Locator (28) as shown in Fig. 5. If Automatic Shut-off Rod (86) does not contact Control Lever (57) try bending rod or replacing it if necessary. If leg on Control Lever (57) is defective, replace entire Control Link Assembly (54).
	2. Hinge Bearing (22) not in proper position with respect to Locator Housing (35).	To check for correct position refer to Item 3 in section entitled "Pick-up Arm (1) sets down at wrong starting point when playing 10" records."
Record fails to drop off the off-set on the Center Post.	1. Pusher shaft inside of Center Post (43) is broken.	Should pusher shaft be broken, the Center Post Roller (44) and "Brass Bushing" will drop out of Center Post (43). If this is the case replacement of the entire Center Post (43) will be required and may be accomplished as follows: a. Locate Set Screw (47) by referring to Fig. 14. Loosen screw, and Center Post (43) may be withdrawn from top of changer. b. Replace with new Center Post (43) making sure Set Screw (47) engages "Locating Hole" at bottom of Center Post (43) (see Fig. 9.)
	2. Ejector Lever (45) does not move out far enough.	Check to see if Screw (85) is loose. (See Fig. 13 for location.) Retighten screw.
	3. Ejector Lever (45) pushes up entire stack of records.	This lever should first rise inside the slot in the Center Post (43) then move forward pushing one record off the shoulder of Center Post (43). This action may be observed by proceeding as follows: a. Place a record on the off-set of the Center Post (43) and then lower Record Support Arm (40) into place. b. Turn Control Knob (52) to "REJ." and rotate Turntable (48) by hand. c. While Turntable is being revolved observe the action of the Ejector Lever (45). d. Should it push forward prematurely, the Center Post (43) is defective and will have to be replaced.
	4. Lift Arm (83) not turning during cycle.	Check for broken roller on Lift Arm Assembly (83). Replace Lift Arm Assembly (83).
More than one record drops at a time.	1. Center Hole in record too large or badly worn.	Records with badly worn center holes will not rest properly on off-set Center Post (43) and these should not be used when using the changer for automatic operation.
	2. Record changer not level.	Record changer must be set in a level position in order for record to rest properly and securely on its supports.
	3. Improper setting of Record Support Arm (40).	See paragraph entitled "Placing Records on Changer" in Operating Instruction section. The Record Support Arm (40) must be able to slide down under its own weight. If this support does not follow the records down as they are being lowered to the Turntable (48) multiple dropping of records will result. While this occurs, it is

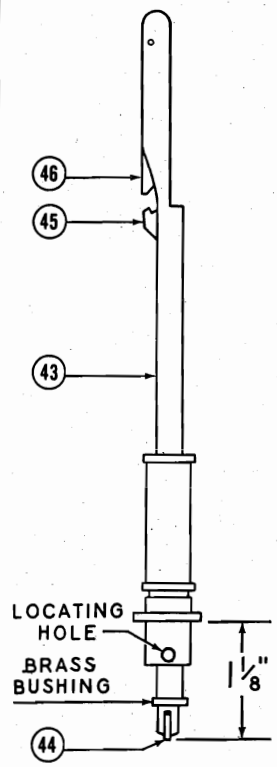

FIG. 9

© John F. Rider

Compliments of www.nucow.com

MODEL VM-508222

TROUBLE SHOOTING CHART (Continued)

SYMPTOM	CAUSE	REMEDY
		generally due to binding between the Record Support Arm (40) and Center Post (43) and may be checked as follows: a. See if Center Post (43) is straight. Carefully straighten. b. Tip of Record Support Arm (40) is slightly bent up. Straighten so that tip of arm rests on offset shoulder of Center Post (43) when shaft of Support Arm is properly seated. c. If after checking the above steps, hole in tip of Record Support Arm (40) is not centered over Center Post (43), raise support arm up as far as it will go and with heel of your hand, bend shaft slightly until hole is centered over Center Post (43). Now lower Record Support Arm (40) until locating pin in shaft enters base plate. There should be an equal amount of play on each side of the hole in tip of the arm. Bend to correct position. d. If Record Support Arm (43) is loose on its shaft, replace.
	4. Slide (46) in upper part of Center Post (43) not all the way down.	Relieve any binding so that Slide (46) will not stick at any point. CAUTION: When records are placed on the Center Post (43) be sure the Slide (46) is all the way down.
Record drops and lands on Pick-up Arm (1): OR 12" records drops and wobbles, failing to hit Trip Lever (17).	1. Ejector Lever (45) does not move out far enough.	Check to see if Screw (85) is loose. (See Fig. 13 for location.) Retighten screw.
	2. Ejector Lever (45) extending out too far.	To check this condition proceed as follows: a. Turn Control Knob (52) to "REJ." position and rotate turntable by hand until Ejector Lever (45) has reached its maximum outward position. b. With a **new** record as a gauge, check to see if any binding occurs. c. Should there be any binding action, it may be removed by using a fine file to remove the high or binding spots.
	3. Hinge Bearing not in proper position with respect to Locator Housing (35).	To check for this condition see Item 3 in section entitled "Pick-up Arm (1) sets down at wrong starting point when playing 10" records."
Record changer fails to shut off automatically after last record has been played.	1. Improper setting of Record Support Arm (40).	See Item 3 in section entitled "More than one record drops at a time."
	2. Changer stalls during change cycle.	See section entitled "Changer stops while changing a record."
	3. Automatic Shut-off Rod (86) not being properly set for automatic shut-off operation. This may be due to one of the following: a. Improperly set Record Support Arm (40). b. Set Screw (47) not fitting properly in locating hole of Center Post (43). c. Screw (85), that holds Lift Arm (83) in place, is loose. d. Bent up end of Automatic Shut-off Rod (86) too short.	On the change cycle following the playing of the last record, and as Lift Arm Assembly (83) swing in, tip of Automatic Shut-off Rod (86) should contact "Brass Bushing" at base of Center Post (43). (See Fig. 14.) If tip of Automatic Shut-off Rod (86) is not contacting "Brass Bushing" check the following: a. After last record has been dropped, tip of Record Support Arm (40) should be resting on off-set of Center Post (43). If this is not the case see Item 3 in section entitled "More than one record drops at a time." b. Be sure that Set Screw (47) is properly positioned in "Locating Hole" at base of Center Post (43). (See Figs. 9 and 14 for location of hole and screw.) c. Tighten Screw (85). (See Fig. 13 for location.) d. If bent-up end of Automatic Shut-off Rod (86) is still not contacting "Brass Bushing," try placing either a 1/64" or 3/64" Fibre Washer (84) between bottom of Lift Arm Assembly (83) and metal washer. Should the rod still not contact bushing properly it will be necessary to replace entire Automatic Shut-off Rod (86). CAUTION: When inserting Fibre Washer (84) care should be exercised that other end of rod does not bind against Control Lever (57).
	4. Automatic Shut-off Rod (86) not actuating Control Lever (57).	After Automatic Shut-off Rod (86) has contacted "Brass Bushing" and has been turned 90°, the Lift Arm Assembly (83) makes its return sweep and the other end of the rod should contact and actuate Control Lever (57), thus shutting off Switch (61). Bending or replacing of Automatic Shut-off Rod (86) may be required.
Record changer shuts off before last record has been played.	1. Center Post Roller (44) moves up too far.	To check this condition refer to Item 8 in section entitled "Changer stops while changing a record."
	2. Record too thick.	Old style records which are 1/8" thick will shut off the changer instead of being dropped. Do not use this type of record for automatic operation.
	3. Automatic Shut-off Rod (86) not being reset.	On the change cycle following a cycle in which the changer was automatically shut off, the Automatic Shut-off Rod (86) should return to its original position. On the in-sweep, the bent-up part of the rod engages the Control Lever (57) which turns the rod 90°. It is held against a stop on the Lift Arm Assembly (83) by a flat Spring (87). If Automatic Rod is not reset, check the following: a. Check tension of Spring (87). Should it be insufficient it would allow the Automatic Shut-off Rod (86) to be out of position, thus turning off changer prematurely.

©John F. Rider

Compliments of www.nucow.com

TROUBLE SHOOTING CHART (Continued)

SYMPTOM	CAUSE	REMEDY
		b. Lubricate the bearing of the Automatic Shut-off Rod (86) and Spring (87) with Lubriplate. c. In normal operation there should be a clearance between Control Lever (57) and Automatic Shut-off Rod (86) when the latter is turned fully down. Bending of rod may be necessary.
	4. Hinge Bearing not in proper position with respect to Locator Housing (35).	If Locator Housing (35) is so positioned that projection on base of housing rides on incline plane of Lift Arm Assembly (83) while the latter is swinging thru its cycle, it would cause other end of Lift Arm Assembly (83) to rise and allow Automatic Shut-off Rod (86) to contact "Brass Bushing." This in turn would cause changer to shut off automatically as previously described. Should this be the case Locator Housing will have to be repositioned as described in Item 3 in section entitled "Pick-up Arm (1) sets down at wrong starting point when playing 10" records."
Slow Turntable Speed.	1. Idler Wheel (63) not engaging Turntable properly.	Be sure Speed Selector Knob (88) is **indexed properly** to either of the four positions. Check to be sure that Spring (72) which pulls Idler Wheel (63) against Turntable (48) has sufficient tension.
	2. Grease on Idler Wheel (63) on Idler Pulley (64), (65), (66) (or Drive Belt (68)) or rim of Turntable (48).	Clean with carbon tetrachloride.
	3. Turntable and Bearing Race (50) binding.	Remove Turntable (48). Check to see if Turntable Washer (49) and Bearing Race (50) are free to rotate. If binding does occur, remove Center Post (43) by loosening Set Screw (47) and withdraw Center Post (43) from the top. Binding of Bearing Race (50) may now be released. Before replacing Turntable (48) clean bearing surface.
	4. Operating temperature too low.	If changer has been stored in cold place or operated in surroundings at a temperature of less than 60° F., the turntable speed may be too slow.
	5. Low line voltage.	Line voltage should not be less than 105 volts.
	6. Defective Motor (62).	If, after checking the above 5 items, the turntable speed is still slow, it may be assumed that the motor is weak (has low torque) and should be replaced.
Noisy operation during playing cycle such as; 1. Rumble or "wow."	a. Changer does not float freely on its mounting springs	Be sure the two hold down screws (see Fig. 16) have been loosened sufficiently to allow the entire unit to float freely.
	b. Improper motor mounting.	Be sure that Motor (62) is mounted on rubber bushings and that frame of Motor (62) is not contacting Base Plate (25).
	c. Worn tire on Idler Wheel (63).	Examine Idler Wheel (63) for flat spots on tire and replace entire wheel if required.
	d. Worn or missing Grommet (73).	Be sure that rubber Grommet (73) at end of Speed Selector Rod (90) is not worn or missing. There should be no metal contact at end of Speed Selector Rod (90) and bracket that controls position of Idler Pulleys (64), (65) and (66).
2. Rapid thumping sound.	Flat spot on Idler Wheel (63), or rubber tire of Idler Pulley (64), (65) or (66).	Examine Idler Wheel (63) as well as Idler Pulleys (64), (65) and (66) for flat spots on rubber tire and replace entire wheel or pulley where required. See section entitled "Procedure for Removal and Replacement of Major Parts" for instructions on replacement of Pulleys (64), (65), or (66).
3. Scraping sound while Turntable (48) revolves.	a. Turntable warped.	This may be checked by noting a serious rise and fall in Turntable as it revolves. Check for warped Turntable or bent bearing. Replace Turntable (48).
	b. Idler Wheel (63) bent.	Replace with new Idler Wheel (63) or new Motor (62) if support shaft is bent.
	c. Wires beneath turntable rubbing.	Dress wires away from Turntable (48).
4. Squeaking sounds.	Lack of lubrication.	See section entitled "Lubrication."
5. A "ticking" sound once every revolution of turntable (48).	a. Bent Clutch Pawl (79).	If this is the case, projection on hub of Turntable (48) will catch edge of Clutch Pawl (79) instead of wiping smoothly along curved surface of pawl during playing cycle. A complete description of this action is outlined in Item 2 in section entitled "Changing a Record" on page 116. Reshape pawl or replace with a new one.
	b. "Block type" Clutch Pawl (79).	Some Clutch Pawls (79) were made with a block of metal at the point of contact. This type is more critical to adjust. If loud "ticking" still persists after bending adjustment, try replacing with a new one.
Noisy operation during change cycle such as: **1. Clicking noise.**	Changing mechanism.	There is a certain amount of clicking noise as the mechanism goes through its cycle. If there are any extra loud sounds check for binding and insufficient clearance of parts.
2. Grinding sounds.	Worn or defective parts, or lack of lubricant.	Check for worn or defective parts or a lack of lubricant.
Excessive Record wear when playing "Long Playing" (microgroove) records.	1. Improper pressure of Pick-up Arm (1).	This pressure should not exceed 12 grams. Should the pressure be found to be too heavy after checking it with a sensitive gram scale, the leg of the Hinge Bracket (13), on which the Counter Balance Pressure Spring (10) is hooked, should be bent forward. CAUTION: Bend slowly and carefully as only a slight change is required. Too little pressure can cause "mistracking."

©John F. Rider

Compliments of www.nucow.com

MODEL VM-508222

ALTERNATE TYPES OF MOTORS

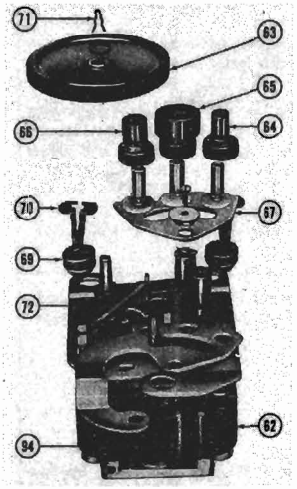

This "turret type" motor is identified by a letter "R" or "3211" stamped on motor.

FIG. 10

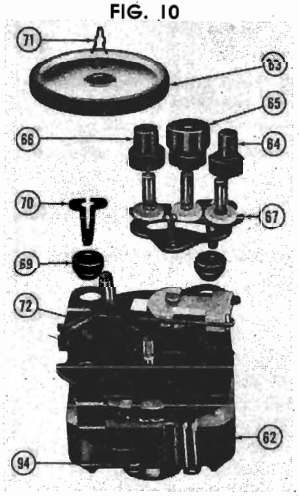

This "turret type" motor is identified by a "GI" on bearing or "3129" stamped on motor.

FIG. 11

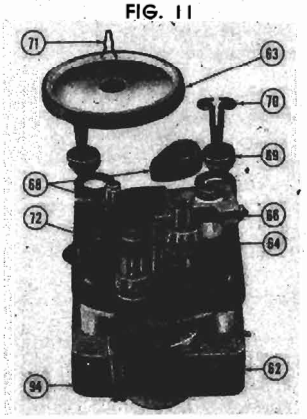

This "belt type" motor is identified by a "GI" on bearing or "2727" stamped on motor.

FIG. 12

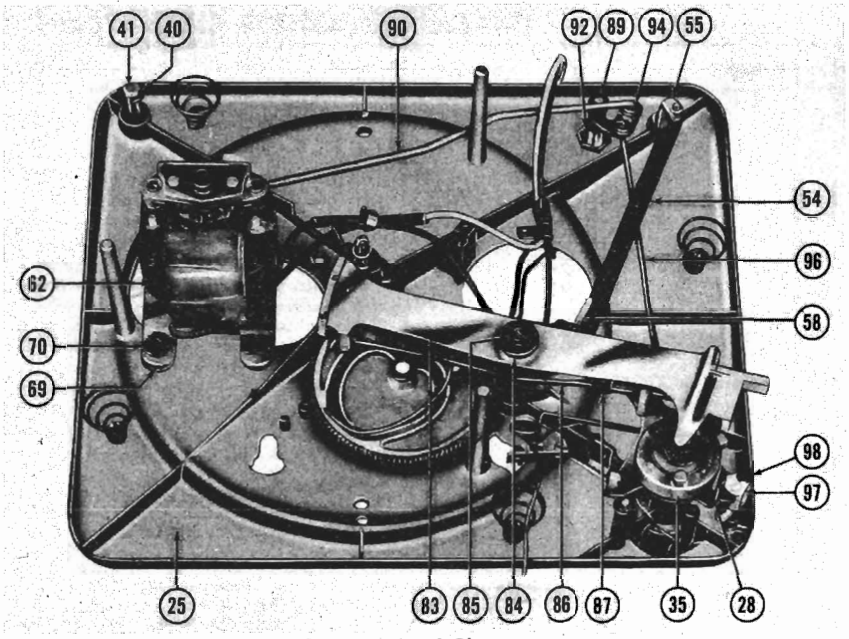

Bottom view of Changer.

FIG. 13

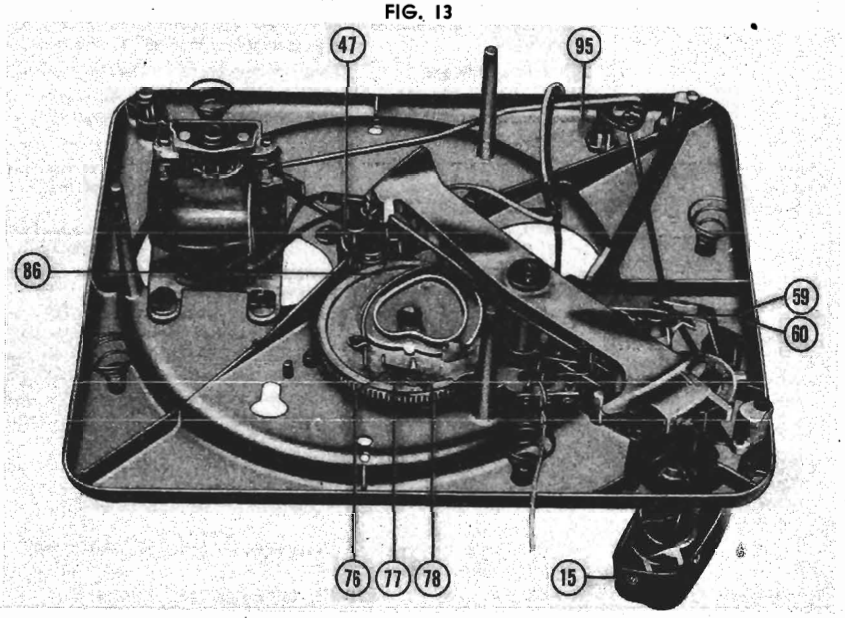

Bottom view of Changer with Automatic Shut-off Rod (86) contacting "Brass Bushing" on Center Post (43) for Automatic Shut-off operation.

FIG. 14

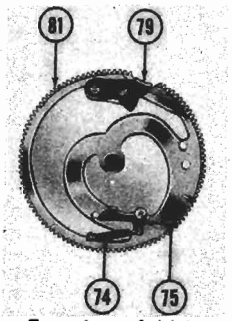

Top view of Main Cam Assembly (81).

FIG. 15

©John F. Rider

Compliments of www.nucow.com

MODEL VM-508222

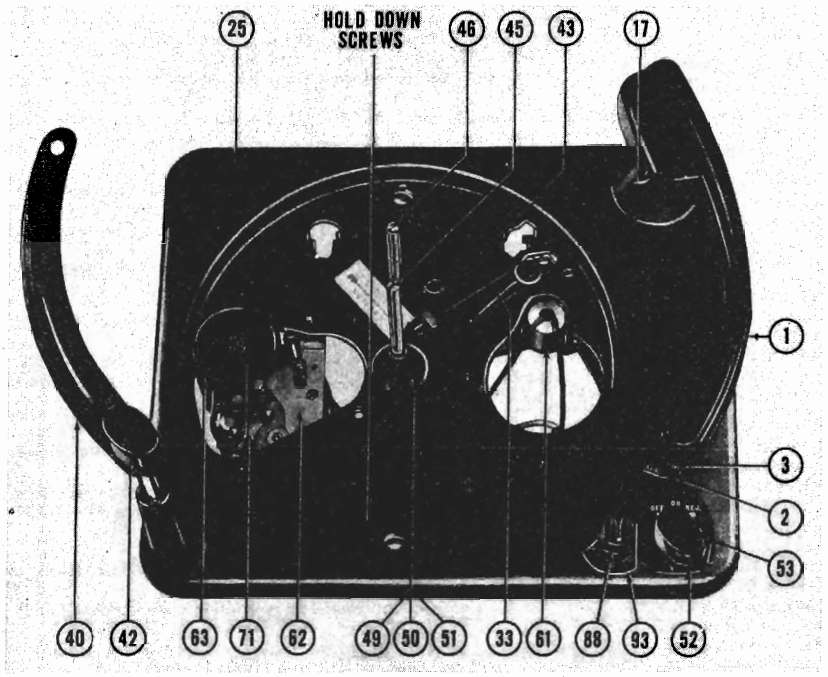

Top view of Changer.

FIG. 16

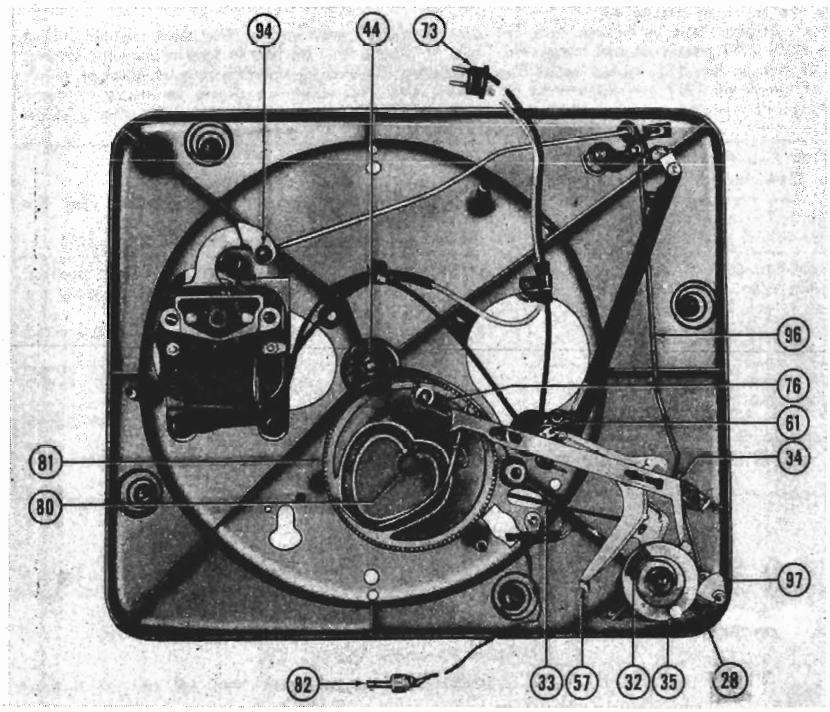

Bottom view of Changer with Lift Arm Assembly (83) removed.

FIG. 17

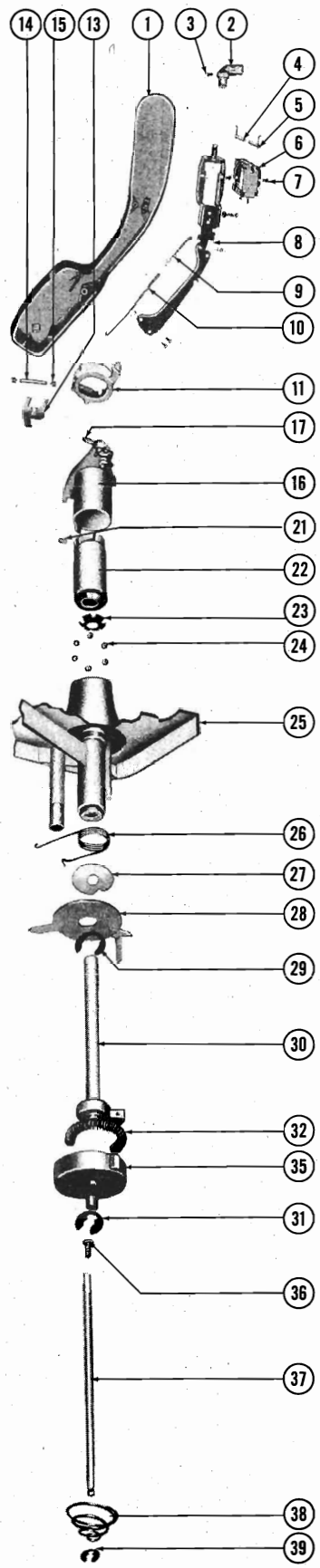

FIG. 18

©John F. Rider

Compliments of www.nucow.com

MODEL VM-508222

PROCEDURE FOR REMOVAL AND REPLACEMENT OF MAJOR PARTS

NAME OF ITEM	METHOD OF REMOVING OR REPLACING
Needle (4) or (5).	To remove Needle (4) or (5), turn Needle Selector Knob (2) so that needle to be replaced faces down. To withdraw needle, merely grasp it between thumb and forefinger and pull straight downward. When inserting a new Needle (4) or (5) place it so that tip faces forward and push shank of Needle all the way in. **CAUTION: When replacing both needles be sure that the fine (.001") tipped Needle (5) is placed in the correct side of the Cartridge (6). A distinct color identifies correct side of cartridge and corresponding Needle (5).**
Crystal Cartridge (6).	To remove this part, first turn Needle Selector Knob (2) until the numbers "33-45" appear at the top. Now raise Pick-up Arm (1) and take out Screws (7) and withdraw Cartridge (6) from arm. Do not attempt to unsolder lead connections — merely slip the "quick disconnect" electrical connectors off prongs at rear of Cartridge (6). To replace Cartridge (6), proceed in the reverse order outlined above. **CAUTION:** Care should be taken, when placing cartridge in Pick-up Arm (1), that side with identifying color faces down.
Center Post (43) and Bearing Race (50).	To remove Center Post (43) loosen Set Screw (47) and withdraw post from top of changer. Turntable Washers (49) and Bearing Race (50) are held in place by Retaining Ring (51). To replace Center Post (43) first be sure that Turntable Washers (49) and Bearing Race (50) are in place. Next, insert Center Post (43) from top of changer and tighten Set Screw (47) making sure screw enters "Locating Hole" at base of Center Post (43) (see Fig. 9 and 14.)
Disassembly of Pick-up Arm Mechanism. TOP ASSEMBLY. BOTTOM ASSEMBLY.	The support which holds and locates the Pick-up Arm (1) is made of an upper and lower major assembly. These assemblies are held together by Set Screw (21). (For location see Fig. 7.) It may be necessary to line up hole in Hinge Locking Ring (11) by moving Adjusting Screws. Before attempting to work on top assembly, it will be necessary to unsolder and disconnect the cartridge lead at the terminal strip on underside of Base Plate (25). Then withdraw lead from hole in Base Plate (25) and proceed as follows to disengage top assembly: 1. Loosen Set Screw (21). Top assembly may now be lifted straight out. 2. Pick-up Arm (1) may be taken off Hinge Assembly (16) by first unhooking Counter Balance Pressure Spring (10) from Hinge Bracket (13). Then loosen Pivot Screws (15) at rear of arm. 3. Disconnect one end of Ring Spring (12), being careful not to break the peened-over stud around which it is fastened. 4. Loosen adjustment screws on Hinge Locking Ring (11). The major assembly may now be separated into three assemblies: Hinge Locking Ring (11), Hinge Bearing (22) and Hinge Assembly (16). Care should be exercised not to lose the six Ball Bearings (24) and Ball Bearing Spacer (23) resting in ball cup on Base Plate (25). Before attempting to work on bottom assembly, it will be necessary to take off Lift Arm Assembly (83) by removing Screw (85). To remove and disassemble bottom assembly, proceed as follows: 1. Loosen Set Screw (21). Bottom assembly may now be withdrawn. 2. If a further breakdown is required, it may be done in the following manner: Take off "C" Washer (39) and withdraw Lift Rod (37). Take out Safety Spring (32). Remove "C" Washer (31). Locator Housing (35) and Pick-up Arm Locator (30) may now be separated.
Replacing Pick-up Arm Mechanism.	The Pick-up Arm mechanism should be reassembled by reversing the procedure given in the preceding paragraphs, exercising the following precaution: 1. When replacing cartridge lead in Pick-up Arm (1) care should be exercised so that lead coming out of hole in Base Plate (25) passes around Hinge Pin (14). It should then be laid in special recesses around inside edge of Pick-up Arm (1), routed under Pivot Assembly (8) and passed thru hole at point of pivot. For final setting of Set Screw (21) and adjustment of Pick-up Arm (1), reference should be made to items 3c, d and e on Page 119 in section entitled "Pick-up Arm (1) sets down at wrong starting point when playing 10" records."
Replacing Lift Arm Assembly (83).	When replacing Lift Arm Assembly (83), observe the following precautions: a. Rotate Main Cam Assembly (81) until it comes to rest and is held by Stop Pawl (75). b. Replace Lift Arm Assembly on the bearing shaft and be sure that Automatic Shut-off Rod (86) fits under Automatic Trip Lift Link (34). c. Be sure roller on Lift Arm Assembly (83) fits into heart-shaped groove in Main Cam Assembly (81).
Idler Pulleys (64), (65), or (66). (Turret type motor.)	To remove an individual Idler Pulley (64), (65) or (66), first set Speed Selector Knob (88) to a position where the particular Idler Pulley to be removed does not make a contact with anything. While holding the Motor (62) steady in one hand, pull Idler Pulley straight up until it releases from its shaft. When replacing Idler Pulleys (64), (65) or (66), they must be slipped over their respective shafts and pressed down firmly until they "snap" into position. **It is important that these pulleys be properly seated.**
Idler Pulley (64) or (66). (Belt type motor.)	Before removal of Idler Pulley (64) can be accomplished it will be necessary to take off Drive Belt (68). In the case of Idler Pulley (66) it will be necessary to remove both Drive Belts (68). Removal of Idler Pulley (64) or (66) can then be accomplished as outlined in first paragraph of preceding section on turret type motor. When replacing Idler Pulley (64) or (66), exercise care to press the pulley down on its shaft until it snaps into position.

LUBRICATION

Additional lubrication should not be required for the life of the changer, but in cases of unusual use or high operating temperature, it may require lubrication.

The recommended lubricants and points of lubrication are as follows:

A. LUBRIPLATE (apply with small brush):

1. Hinge Bearing (22).
2. Locator Housing (35) and Set Down Locator (28).
3. Inclined Planes of Lift Arm Assembly (83), lift arm bearing, and bearings for Automatic Shut-off Rod (86).
4. Between Automatic Shut-off Rod (86) and Spring (87).
5. Heart-shaped groove in Main Cam Assembly (81) and main cam bearing.
6. At lower section of Center Post (43) where the "Brass Bushing" and support of Center Post Roller (44) enter body of Center Post (43).
7. Between Turntable Washer (49) and Bearing Race (50).
8. Bearing for Automatic Trip Link (34).

B. LIGHT MINERAL OIL (apply with small oil can or medicine dropper):

1. Pick-up Arm Locator (28) inside of Locator Housing (35) and their bearing surfaces.
2. Ball Bearings (24). inside pick-up arm housing in Base Plate (25).
3. Bearings for Control Link Assembly (54).

©John F. Rider

Compliments of www.nucow.com

MODEL VM-508222

PARTS LIST

REF. No.	PART No.	DESCRIPTION
1	507600	Pick-up Arm (less pivot assy. and cartridge)
2	508579	Knob — Needle Selector
3	507602	Screw — Set; for Needle Selector
4	508433	Needle — Phonograph for Standard records
5	508434	Needle — Phonograph for "Fine Groove" and "Microgroove" records
6	508432	Crystal Cartridge (incl. both needles)
7	508577	Screw #4-40 x 1/8"; for mtg. cartridge
8	508578	Pivot assembly and cartridge mtg. brkt.
9	507605	Chain
10	507606	Spring — Counter Balance Pressure
11	505243	Hinge Locking Ring (incl. adjustment screws)
12	505244	Ring Spring
13	507607	Hinge Bracket
14	507608	Hinge Pin for Pick-up Arm
15	507609	Pivot Screw for Hinge Pin
16	507610	Hinge Assembly (incl. trip lever, index cam, index spring, index lever)
17	*	Trip Lever (part of Item 16)
18	*	Index Cam (part of Item 16)
19	*	Spring, Index (part of Item 16)
20	*	Index Lever (part of Item 16)
21	505246	Screw, Set #8-32 x 3/16"; for Hinge Bearing
22	505245	Hinge Bearing
23	508113	Ball Bearing Spacer
24	505252	Ball Bearing
25	508580	Base Plate
26	505256	Return Spring
27	507612	Washer — Set Down Locator Clutch
28	508115	Set Down Locator
29	506787	"C" Washer for Set-Down Locator
30	505247	Pick-up Arm Locator
31	505248	"C" Washer for Pick-up Arm Locator
32	505249	Spring, Safety
33	508138	Rod, Manual Reject
34	508130	Automatic Trip Link
35	508116	Locator Housing
36	505291	Height Adjusting Screw
37	505289	Lift Rod
38	505292	Spring, Lift Rod
39	505267	"C" Washer for Lift Rod
40	505832	Record Support Assembly
41	506788	"C" for Record Support Arm
42	506770	Knob for Record Support Arm
43	506772	Center Post
44	*	Center Post Roller (part of Item 43)
45	*	Ejector Lever (part of Item 43)
46	*	Slide (part of Item 43)
47	506782	Screw, set; for center post
48	508117	Turntable
49	508582	Turntable Washer
50	508581	Turntable Bearing
51	507616	Retaining Ring for Turntable Washers
52	506770	Control Knob
53	507617	Escutcheon — "OFF-ON-REJ."
54	508119	Control Link Assembly (incl. Control Crank and Control Lever)
55	*	Control Crank (part of Item 54)
56	505266	"C" Washer for Control Crank
57	*	Control Lever (part of Item 54)
58	505268	Spring, Reject
59	506786	Washer, Fiber; for Control Lever
60	505267	"C" Washer for Control Lever
61	505269	Switch — "ON-OFF"
62	508120	Motor — 115 volt, 60 cyc.
63	508901	Idler Wheel for Motor identified with "R" or "3211" stamped on Motor
	508121	Idler Wheel; used on Motor identified with "GI" on bearing surface or either "2727" or "3129" stamped on Motor
64	508902	Idler Pulley for 33 1/3 R.P.M.; used on Motor identified with "R" or "3211" stamped on Motor
	508903	Idler Pulley for 33 1/3 R.P.M.; used on Turret Type Motor identified with "GI" on bearing or "3129" stamped on Motor
	508904	Idler Pulley for 33 1/3 R.P.M.; used with Belt Type Motor identified with "GI" on bearing or "2727" stamped on Motor
65	508905	Idler Pulley for 78 R.P.M., used on Motor identified with "R" or "3211" stamped on Motor
	508906	Idler Pulley for 78 R.P.M.; used on Turret Type Motor identified with "GI" on bearing or "3129" stamped on Motor
66	508907	Idler Pulley for 45 R.P.M.; used on Motor identified with "R" or "3211" stamped on Motor
	508908	Idler Pulley for 45 R.P.M.; used with Turret Type Motor identified with "GI" on bearing or "3129" stamped on Motor
	508909	Idler Pulley for 45 R.P.M.; used with Belt Type Motor identified with "GI" on bearing or "2727" stamped on Motor
67	508910	Bracket, Idler Pulley Mounting; used on Motor identified with "R" or "3211" stamped on Motor
	508911	Bracket, Idler Pulley Mounting; used on Motor identified with "GI" on bearing surface or "3129" stamped on Motor
68	508139	Drive Belt for Motor; used on Motor identified with "GI" on bearing surface or "2727" stamped on Motor
69	508912	Rubber Bushing for Mounting Motor; used on Motor identified with "R" or "3211" stamped on Motor
	508123	Rubber Bushing for Mounting Motor; used on Motor identified with "GI" on bearing surface or either "2727" or "3129" stamped on Motor
70	508122	Clip, Motor Mounting
71	505267	"C" Washer for Mounting Idler Wheel
72	508913	Spring, Idler Wheel Tension; used with Motor identified with "R" or "3211" stamped on Motor
	508914	Spring, Idler Wheel Tension; used on Motor identified with "GI" on bearing surface or either "2727" or "3129" stamped on Motor
73	501031	Plug for Phono. Motor Cable
74	508137	Spring for Stop Pawl
75	*	Pawl, Stop (part of Item 81)
76	508133	Pawl, Trip
77	508135	Spring Washer for Trip Pawl
78	508134	"C" Washer for Trip Pawl
79	508136	Pawl, Clutch
80	505284	"C" Washer for Main Cam
81	508132	Main Cam Assembly (incl. Clutch Pawl, Trip Pawl, Stop Pawl and Spring)
82	500966	Plug for Phono. Pick-up Cable
83	505285	Lift Arm Assembly (incl. Automatic Shut-off Rod and Spring)
84	506781	Washer, Fiber; 3/64" thick
	506780	Washer, Fiber; 1/64" thick
85	505288	Screw for Lift Arm
86	505286	Automatic Shut-off Rod
87	505287	Spring, Automatic Shut-off Rod
88	507622	Knob for Speed Selector
89	508124	Speed Selector Shaft and Arm
90	508126	Speed Selector Rod
91	505266	"C" Washer for Speed Selector Shaft
92	507624	Bushing for Speed Selector Shaft
93	508127	Escutcheon — Speed Selector
94	508125	Rubber Bushing for Speed Selector Rod
95	508131	Spring, Speed Selector Shaft
96	508128	Index Rod
97	508129	Locator Cam
98	505279	"C" Washer for Locator Cam
	508533	Inserts for 45 R.P.M. records (pkg. of 12)

*Not supplied as replacement part

©John F. Rider

Compliments of www.nucow.com

Compliments of www.nucow.com

MODELS 100, 100-55, 100-62, 100-64, 100-557

MODEL 100

MODEL 100-64

MODEL 100-55 100-557

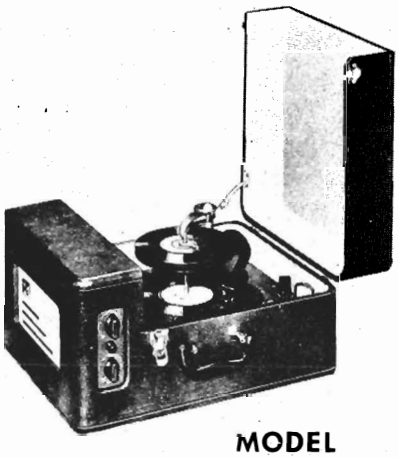

MODEL 100-62

SERVICE INSTRUCTIONS

WEBSTER-CHICAGO MODEL 100 RECORD CHANGER

DESCRIPTION

Model 100 is a three speed Automatic record changer. Simple in design and operation, it provides automatic playing of up to a 1" stack of 7-inch, 10-inch or 12-inch records at speeds of 33⅓, 45 or 78 rpm.

Model 100 features Automatic adjustment for any diameter record stack, an Automatic "manual" position, a "flat" record drop, an improved spindle that carefully lowers the unplayed record stack to the spindle step, ready for the next record change cycle.

Model 100 returns the Pickup Arm to the Rest position after playing the last record; the motor continues to revolve until the Speed Selector Lever is moved to the nearest "OFF" position. The idler wheel is also pulled away from the motor shaft when the Speed Control Lever is in an "OFF" position, eliminating the possibility of a flat spot developing in the rubber wheel. Two "OFF" positions are available for ease of operation.

Model 100 features the Webster-Chicago Velocity-Trip Mechanism which gives an unusually fast record change. The Pickup Arm is not actuated by "lead-in" springs so there is almost no lateral pressure. The arm travels freely in either direction. This lack of lateral pressure adds immeasurably to the life of records and is considered to be as important as extra-light vertical pressure. The free floating arm permits "home recordings" or "inside out" records up to 12" size to be played manually.

Model 100 will change warped or rough-edged records, at the same time assuring maximum protection to the finest disc.

The basic Model 100 Mechanism is used in the following models:

Model 100-1 is the basic record changer chassis with a Crystal pickup cartridge and replaceable needle. The needle and cartridge have high compliance so they will play both standard groove and microgroove records at low needle pressure.

Model 100-27 is the same basic mechanism as above with special pickup arm and interchangeable plug-in heads designed for the G. E. Variable Reluctance Cartridges.

Model 100-55, Model 100-557 are models 100-1 and 100-27 respectively mounted on an attractive metal base to fully enclose and protect the mechanism.

Model 100-62 is a complete portable phonograph with the Model 100-1 record changer, an amplifier and speaker mounted in an attractive burgundy leatherette carrying case.

Model 100-64 is the basic Model 100 mechanism mounted in an attractive burgundy leatherette carrying case for portable use. An output receptacle is provided especially for the Model 66 and Model 166 portable amplifiers. A special cord and plug assembly is also provided to facilitate connecting Model 100-64 to a radio receiver or P.A. amplifier and speaker.

©John F. Rider

Compliments of www.nucow.com

MODELS 100, 100-55,
100-62, 100-64, 100-557

OPERATION

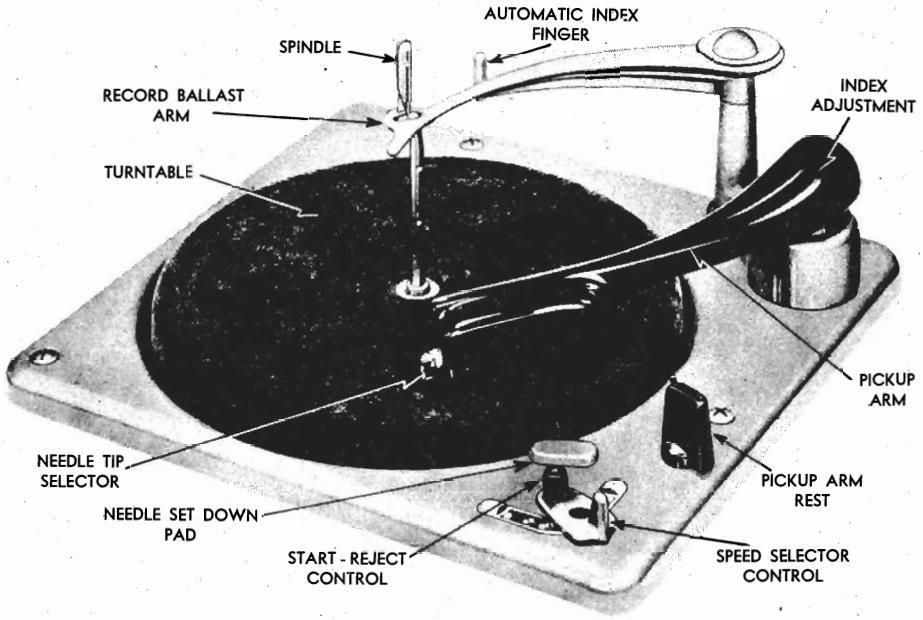

A.C. POWER CONNECTIONS

Most models are designed for 105-120 volt operation. Special models may be designed for 210-240 volt operation.

Always check the production tag on the underside of the mainplate to determine the correct voltage and current required by your particular changer mechanism.

If it is desired to operate the changer on 50-cycle current, a special motor shaft sleeve must be used in order to drive the turntable at the required speed.

Do not under any circumstances connect the changer to a source of direct current (DC) or alternating current of any other frequencies.

The motor switch is part of the Speed Control Lever. The power is off when the lever is in an "OFF" position.

The following instructions regarding the changer controls apply to all models. Special instructions regarding the Model 100-62 amplifier controls are given in the printed operating instructions.

FOR "AUTOMATIC" RECORD CHANGE

1. Lift the Record Ballast Arm and swing it away from the spindle until it "latches" with a light snap. The Automatic Index Finger will follow.
2. Place up to a 1-inch stack of any one size of records on the Spindle and swing the Record Ballast Arm back to the spindle allowing it to drop in position with the spindle in the hole. The Automatic Index Finger will remain away from the record until the change cycle starts. It will then move in to feel the diameter of the record and automatically index the pickup needle to the proper playing position.
3. Then turn Needle Tip Selector to correct position for records being played. Move the Speed Selector Lever to the correct speed for the records being played and push the START-REJECT control.
4. To reject any record while playing in the Automatic Position, push the Reject control.

After the last record has been played, the entire stack may be removed from the turntable at one time. The simplest procedure is as follows:

a. Lift and turn the Record Ballast Arm weight out of position until it latches. Be sure the pickup arm is on the pickup arm rest.
b. Place the fingers of both hands under opposite edges of the bottom record. Do not apply pressure to the top record but keep your thumbs free, and lift the stack of records straight up, following the contours of the spindle. This permits the stack of records to follow the curve of the spindle without binding.

FOR "MANUAL" RECORD CHANGE

1. Lift the Record Ballast Arm and swing it and the Automatic Index Finger away from the spindle. The changer is then automatically in "manual" until the Record Ballast Arm is moved in and placed over the spindle. The pickup arm can be moved in or out without tripping the Velocity Trip automatic mechanism so long as the Record Ballast Arm and Automatic Index Finger are left in this position.
2. Turn Needle Tip Selector to correct position for record being played. Place a record on the turntable. Move the Speed Control Lever to the correct speed for the record being played and then place the needle gently on the record. To stop the mechanism at any time turn the Speed Selector Lever to an "OFF" position.

©John F. Rider

Compliments of www.nucow.com

MODELS 100, 100-55, 100-62, 100-64, 100-557

SERVICE INFORMATION

All units are accurately adjusted, lubricated and tested at the factory. However, service repairs and adjustments sometimes become necessary. This bulletin should be studied carefully before making any adjustments or replacing parts.

Service parts are available from your Webster-Chicago distributor. All parts must be ordered by piece part number as given in the parts list on page 11 and by model and production number, stamped on the underside of the main plate.

The functions and most probable misadjustments of the main assemblies are as follows (reference numbers refer to the exploded views on page 10).

FAILS TO CHANGE RECORDS AUTOMATICALLY

The Main Cam Assembly (61) drives the mechanism associated with the action of the Pickup Arm (23) and the Record Selector assemblies. It, in turn is driven by the gear train (9) and the Turntable which is rim driven by the phonograph motor.

The Cam Drive Gear (56) is put in motion or "tripped" by means of the "Velocity Trip" (57) or by the manually operated "reject" trip (25). When the movement of the Pickup Arm toward the spindle is greater than 1/8" in 1/2 revolution of the turntable, the Velocity Trip Arm (76) trips the Velocity Trip (57). This releases the Actuating Pawl on the Main Cam Assembly (61), allowing it to engage the Cam Drive Gear (56) and driving it through the change cycle. The pressure from the Velocity Trip Arm required to actuate the trip mechanism is negligible.

The Velocity Trip Arm (76) follows the movement of the Pickup Arm through a weighted friction clutch (75). This clutch must be kept free of oil and grease. If the clutch does not cause the Velocity Trip Arm to trip the mechanism, clean the clutch parts with carbon tetrachloride. This clutch should operate the trip mechanism without placing undue drag on the movement of the pick-up arm.

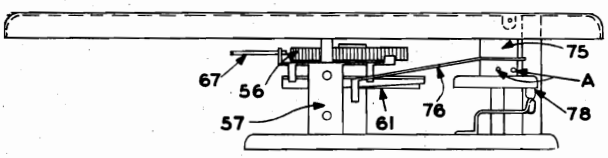

Fig. 1

Also check for:

1. Velocity Trip (57) binding on its mounting Pin (J of 69).
2. Slight burr on end of the Actuating Pawl or on the underside of the hook end of the Velocity Trip (57).
3. Actuating Pawl stuck (part of Main Cam Assembly (61) engaged by the hook end of the Velocity Trip (57)).
4. Velocity Trip Arm (76) bent and not hitting the Velocity Trip (57).
5. Velocity Trip Arm (76) fails to touch the Velocity Trip.
6. Velocity Trip (57) rubbing on the underside of the Cam Drive Gear (56).
7. No velocity lead-in groove or eccentric groove in the center of record.
8. Foreign matter in record groove.
9. Badly worn record.
10. Badly bent or worn needle.
11. Spindle out of adjustment. (See "Does not push off records, page 7).

CHANGES RECORDS PREMATURELY

At the completion of the change cycle, the Actuating Pawl (part of 61), is disengaged from the Cam Drive Gear (56) by the hook end of the Velocity Trip (57), which has been returned to its normal position by the reset points on the Cam Drive Gear (56).

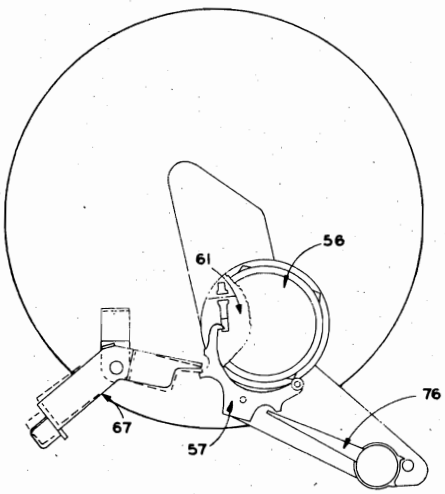

Fig. 2

©John F. Rider

Compliments of www.nucow.com

MODELS 100, 100-55, 100-62, 100-64, 100-557

If the vertical clearance between the lip on the Velocity Trip Lever and the edge of the Main Cam is too small, it will prevent the hooked end of the Velocity Trip Lever from engaging the trigger. Adjust the clearance between the lip on the Velocity Trip Lever and the Main Cam to be within 1/32" and 1/64" when the roller is contacting the point of one of the reset points on the Cam Drive.

Also check for:

1. Velocity Trip (57) rubbing on Cam Drive Gear (56).
2. Manual Trip Lever (67) binding.
3. "Disengage Roller" broken on the Velocity Trip (57).

PICKUP ARM DOES NOT CLEAR 1" RECORD STACK

The vertical movement of the pickup arm is controlled by the angle of the pickup arm raising lever (62 and Fig. 3). The needle should approach the top record of a full 1" stack of records on the turntable with approximately 1/16" clearance.

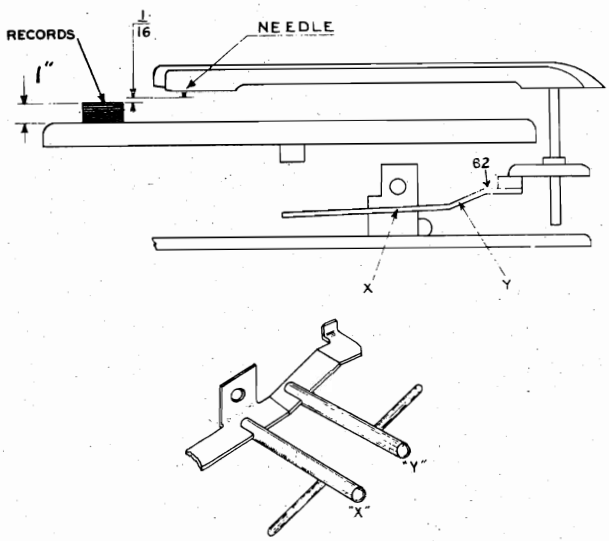

Fig. 3

To adjust:

1. Put a full 1" stack of records ON THE TURNTABLE.
2. Trip the "Reject" control and rotate the turntable clockwise until the pickup arm reaches its highest point.
3. Be sure the center or 10" notch in the pickup arm raising disc engages the pickup arm raising lever.
4. If the needle does not clear the top record or if it raises too high, adjust by holding the pickup arm raising lever (62) at point X and bending at Y as indicated in Fig. 3.

CAUTION: All adjusting bends should be made slowly, using slight but firm, easy pressure. Be careful to bend only up and down, not across the lever.

Be sure the set screws in the Pickup Arm Raising Disc (78A) are not loose and are properly positioned in the alignment holes as explained in the paragraph on Needle Setdown position.

NEEDLE SET DOWN POINT INCORRECT

The pickup arm should set the needle down at or just outside the "lead-in" groove of the record, regardless of the size of the record. The group of parts illustrated in Fig. 4 are all inter-related so it is advisable to follow a set routine when checking for the proper needle set down positioning. At the factory the following routine is followed:

1. Adjust for pickup arm height. This should be done before the needle set down positioning is adjusted because the pickup arm raising lever (62) sometimes has to be bent in order to adjust the pickup arm higher and this bending may affect the position of the edge of the lever in the notches of the pickup arm raising disc (78) later. See the paragraph above for this adjustment.

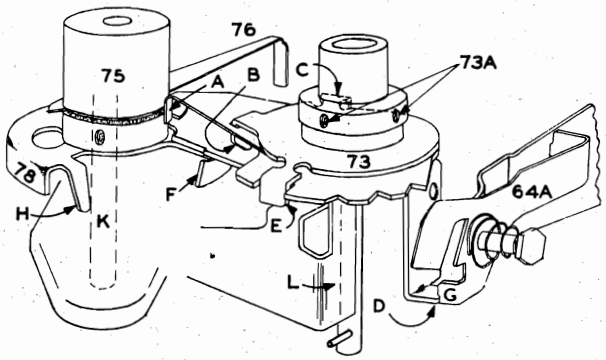

Fig. 4

2. Check the adjustment of the positioning ear (H of 78). To do this, place a 7" record on the spindle or hold the index finger out in the 7" position while you trip the change mechanism and revolve the turntable by hand until the

©John F. Rider

Compliments of www.nucow.com

pickup arm goes out over the pickup arm rest as far as it will go. At the extreme limit of its movement the pickup arm raising lever (62) should engage the 7" notch of the pickup arm raising disc (78). If it does not engage the notch, bend the ear (H of 78) so that the ear just touches the mounting stud K and forces the lever to engage the notch properly. (NOTE: This ear was used on previous record changer models to adjust the pickup arm and assure its setting down on the pickup arm reset.)

Now that you are certain that the pickup arm raising lever (62) is properly engaging the notch of the pickup arm (78), check the actual Needle Setdown Point. Put a 10" record on the spindle, trip the mechanism and revolve the turntable by hand until the needle almost touches the record. If the needle is not about to touch the record at the proper position, use two No. 6 Bristol wrenches to adjust the screws 78A and properly position the pickup arm.

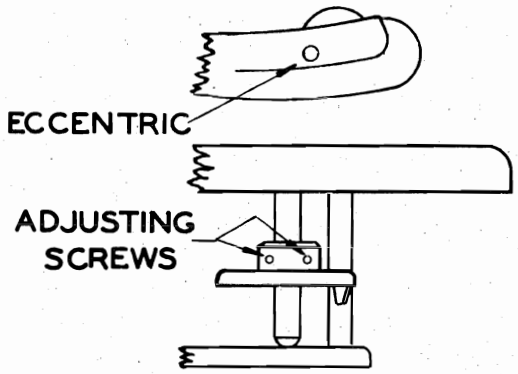

Fig. 5

These screws have pointed ends which fit into the "off center" holes in the shaft (21C). NOTE: The slot in the eccentric adjustment (21D), reached through the hole in the top of the pickup arm, should point along the pickup arm and not across it.

A vernier adjustment for the 12" set down point is provided by the screw (78B) which holds the ear on the pickup arm raising disc in position. With the mechanism "in cycle", the pickup arm out over the rest button (11) as far as it will go, and with the pickup arm raising lever (62) in the 12" notch of the raising disc (78), loosen the adjusting screw (78B) and move the adjusting ear so it just touches the 12" index adjusting ear (B of 73). See Fig. 4. Tighten the adjusting screw (78B) to hold the ear in this position.

3. Check the adjustment of the record ballast arm. It should drop over the spindle when it is swung into position. If necessary, bend the ear L of the stop bracket (69) so that the record ballast arm will drop over the spindle easily.

In most all cases you will find that most of these adjustments are perfect. With a little experience you will learn what to watch and can breeze through them rapidly only stopping when some misadjustment is evident. However it is important that this routine be followed for proper final results.

ERRATIC NEEDLE SETDOWN POSITIONING

If all adjustments to assure a correct needle set down seem all right and the needle still sets down at odd and wrong positions, check:

1. Lip (D of 73, Fig. 4) should engage G of 64A by only about $^{3}/_{32}$". If it is difficult for G to clear D, the movement of the pickup arm will not be properly controlled and erratic "Indexing" will result. Bend D, if necessary, to permit smooth, easy seperation of these two parts.

CANNOT "REJECT" RECORDS

Pushing the Reject button (25) causes the Trip Lever Arm (67) to contact the Velocity Trip mechanism (57), putting the change mechanism in cycle.

If you cannot "Reject" records, check the perpendicular ear of the Velocity Trip mechanism. It may be bent so the Trip Lever Arm cannot touch it.

CANNOT PLAY RECORDS "MANUALLY" OR ONE AT A TIME

The changer is automatically in "manual" whenever the Record Ballast Arm (1A) and the Index

©John F. Rider

Compliments of www.nucow.com

MODELS 100, 100-55,
100-62, 100-64, 100-557

Finger (1C) are turned out as far as they will go, as tho you were loading a stack of records. The finger D of (73) holds the finger G of (64A), causing finger A of (73) to hold the velocity trip arm away from the change mechanism as long as the Index Finger is "out" away from the spindle.

If the mechanism "trips" with the Index Finger in the Manual position check for:

1. No detent in end of finger D of (73). (See Fig. 4.)
2. Dirt in the detent.
3. Finger A of (73) bent so it does not stop and hold the velocity trip arm.

DOES NOT PUSH OFF RECORDS

The action of the vertical cam of (64) on the bent lever plate (71) forces the actuating rod (A) up into the spindle (3) to move the record push off finger forward, pushing off the bottom record of the unplayed stack.

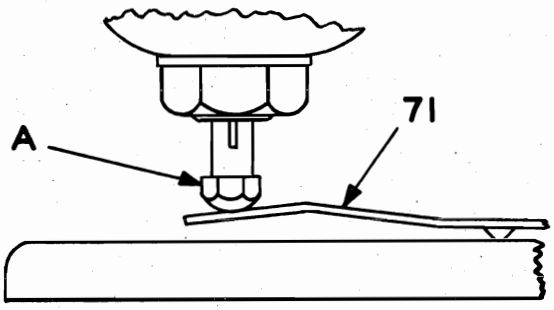

Fig. 6

If the push off finger fails to release the record:

1. Put a full 1" stack of 12" records on the spindle, turn on the A.C. power and trip the Reject button. If the bottom record is not pushed off:
2. Turn the Adjusting nut (A) ¼ turn counter-clockwise out of the spindle to make the actuating rod slightly longer.

   If the bottom record still does not drop, continue turning the adjusting nut counter-clockwise, ¼ turn at a time, until the record is pushed off.

   CAUTION: If the actuating rod is turned out too far, the cam of (64) will not be able to complete its motion and the changer will stall in cycle. When a change cycle has been completed there should be very slight play at both ends of the rocker lever (71).

STALLS DURING CHANGE CYCLE

1. See above.
2. Check for low line voltage.

MORE THAN ONE RECORD IS DROPPED DURING A CHANGE CYCLE

The floating latch at the top of the Record Spindle is so spaced that only one record at a time can slide between the heel of the latch and the step of the spindle. The hole in the latch is elongated so that the latch can slip into the spindle recess when records are being removed.

If more than one record is dropped at a time, it will be found to be due to:

1. Foreign matter in spindle recess causing the latch to stick.
2. Exceptionally thin records.
3. Bent spindle.

INCORRECT TURNTABLE SPEED

The three speed mechanism and the motor are one assembly. The Drive Wheels (31, 32 and 33) are mounted on a movable metal plate (35) in such a way that moving the Speed Selector Lever (27) moves the correct wheel into position between the motor shaft and the Turntable drive idler (79). The tongue of the detent spring (53) fits into an indentation in the edge of the metal plate to index the speed selector wheels and hold them firmly in the desired position.

"OFF" indentations between each speed position hold the drive wheels away from the motor shaft and the Turntable idler when the Speed Selector Lever is in an "off" position.

If the Turntable speed is incorrect, check for:

1. Turntable Idler (79) cocked at an angle. Bend the wheel and shaft to straighten wheel.

©John F. Rider

Compliments of www.nucow.com

CAUTION: Do not bend idler (79) toward the drive wheels (31, 32, 33). Bend only sideways or away from the wheels.

2. The drive wheel mounting assembly (part of motor assembly (44)) must not bind. There should be at least 1/64" play at point "A". Bend the raised metal stop if more clearance is needed.
3. The entire motor assembly (44 plus 35, etc.) should be free floating. There should be slight play of the Speed Control Lever (27) between the "78" and "33" positions and the stops at the end of the speed selector dial.
4. Defective drive wheels (31, 32, 33).

ERRATIC SPEED (wow)

Remove any dirt or excess flocking from the inside rim of the turntable. Check the rubber part of the drive wheels for a flat spot or "out of round". If the rubber part of either Drive wheel becomes slick and shiny — Replace.

GLIDE-IN ON 12" RECORDS

The term "glide-in" is used to describe the action of the pickup arm and needle when the needle does not sit down smoothly in the first groove of the record, despite accurate indexing adjustments, but seems to glide over the first two or three grooves before seating itself properly. If glide-in occurs:

1. The pickup cord may be dressed too tight or in such a manner that it interferes with the free movement of the pickup arm. Make certain there is sufficient play in the pickup cord.

SLIDE-IN OR NEEDLE JUMPS GROOVES

Slide-in describes the condition where the needle will touch the first groove of the record properly but will jump the grooves forward or back as though the needle pressure was too light.

To correct slide-in, check for:

1. Incorrect needle tip. The standard ("78") tip will be especially likely to jump grooves of a microgroove record. Be certain the "micro" or "33-45" tip is used for either the 33⅓ or 45 rpm microgroove records.
2. Chipped or damaged needle.
3. Tight pickup cord.
4. Needle pressure too light. See page 9.

CHANGE CYCLE STARTS BEFORE END OF RECORD

If the Trip Assembly chatters while the changer is running or if the changer cycles before the entire record is played, there is probably insufficient clearance between the hook end of the Velocity Trip (57) and the actuating gear (56). This clearance should be adjusted to be within 1/32" to 1/64" by bending the lever.

REPLACEMENT OF PARTS

TO REPLACE THE PICKUP ARM

1. Unhook the pickup arm hinge clip (21A) and raise the arm to a vertical position.
2. Remove the two mounting screws. Remove the pickup arm.
3. Attach the new arm.

The weight of the arms is uniform so the needle pressure adjustments should be left alone.

REPLACE PICKUP ARM BRACKET AND SHAFT ASSEMBLY

1. Loosen Bristol screws in Pickup Arm Raising Disc (78A).
2. Remove the felt disc (77), Automatic Trip Arm (76) and Clutch (75) by sliding them off the bottom of the Pickup Arm Shaft (21C). Pull the shaft out of the changer.

To replace, reverse the procedure and adjust the

©John F. Rider

Compliments of www.nucow.com

MODELS 100, 100-55,
100-62, 100-64, 100-557

Pickup Arm Raising Disc set screws for proper needle set down as explained on page 6.

TO REPLACE THE NEEDLE

1. Loosen the needle set screw, or thumb nut if used.
2. Remove the needle.
3. Insert the new needle and tighten the set screw or thumb nut.

Some needles are simply forced into a socket, no set screw or thumb nut being required. Just pull the old one out and force the new one in.

TO REPLACE THE CARTRIDGE

Special mounting brackets are required for the cartridges supplied by the different manufacturers. When replacing a cartridge it is advisable to leave the bracket attached to the pickup arm and remove the cartridge from the bracket. The mounting bracket is not included in the replacement cartridge package. Webster Electric's A7M-1 cartridge assembly is one exception.

Webster Electric, Astatic, Shure Bros. and Electro Voice "turnover" type cartridges are all approved for use in W/C changers. Replacements should be ordered from your radio service technician or your radio parts supplier. Order by the manufacturers part number but accept a substitute number at your dealers recommendation. Some cartridge manufacturers have two sets of part numbers for the same unit. For example Shure Bros. P-76, sold only to changer manufacturers, is identical with their W-22AB, sold only to radio parts stores.

TO REPLACE THE MOTOR

It is not necessary to replace the entire Three Speed mechanism when replacing the motor. However, it is necessary to remove the entire assembly from the main plate, and then remove the motor from the assembly.

1. Remove the entire assembly by removing mounting screws (52) and tension clip (40 part of 38).
2. Remove and save the Turntable Drive Wheel (79) the detent spring (53) and tension spring (54).
3. Remove and save the three Speed mechanism plate assembly (37) by removing clip and washer (34) and (35). Do not remove the small drive wheels (31, 32, 33) from the plate.
4. Reassemble new motor to the Three Speed Mechanism plate and the entire assembly to the main plate.
5. It may be necessary to adjust the play of the Three Speed Mechanism mounting plate "C" (part of the motor 44), so there is proper play between the sliding stop and the metal stop at point "A" (see page 10). The mounting plate should be free, approximately $\frac{1}{64}$" clearance between the sliding stop and point "A".

TO REPLACE THE TRIP MECHANISM

1. Remove screw (55) from the top of the Main Actuating Gear (56). Remove the three screws holding the main plate to the subplate mounting posts "K" of 69.
2. Lower the sub plate (69) and lift the Main Actuating Gear (56) and lift the Trip Mechanism (57) from the mounting post (J of 69).
3. Replace the new parts in reverse order.

TO REPLACE PICKUP ARM RAISING LEVER

1. Follow steps 1 and 2 above.
2. Remove "C" clip (59) and washers (58 and 60). Lift the Main Cam Assembly (61) and remove the pickup arm raising lever assembly (62).
3. Replace the new parts in reverse order.

TO ADJUST NEEDLE PRESSURE

1. Unsnap the pickup arm hinge (21A) and raise the arm to a vertical position.
2. Insert a small steel rod in the holes A of the spring mounting stud (21B). Turn the mounting stud downward to increase or upward to decrease the needle pressure.

   CAUTION: A slight movement of the stud is usually enough. An accurate gauge is necessary to insure correct needle pressure. Most cartridges require 7 to 10 grams for proper tracking and best reproduction.

©John F. Rider

Compliments of www.nucow.com

MODELS 100, 100-55,
100-62, 100-64, 100-557

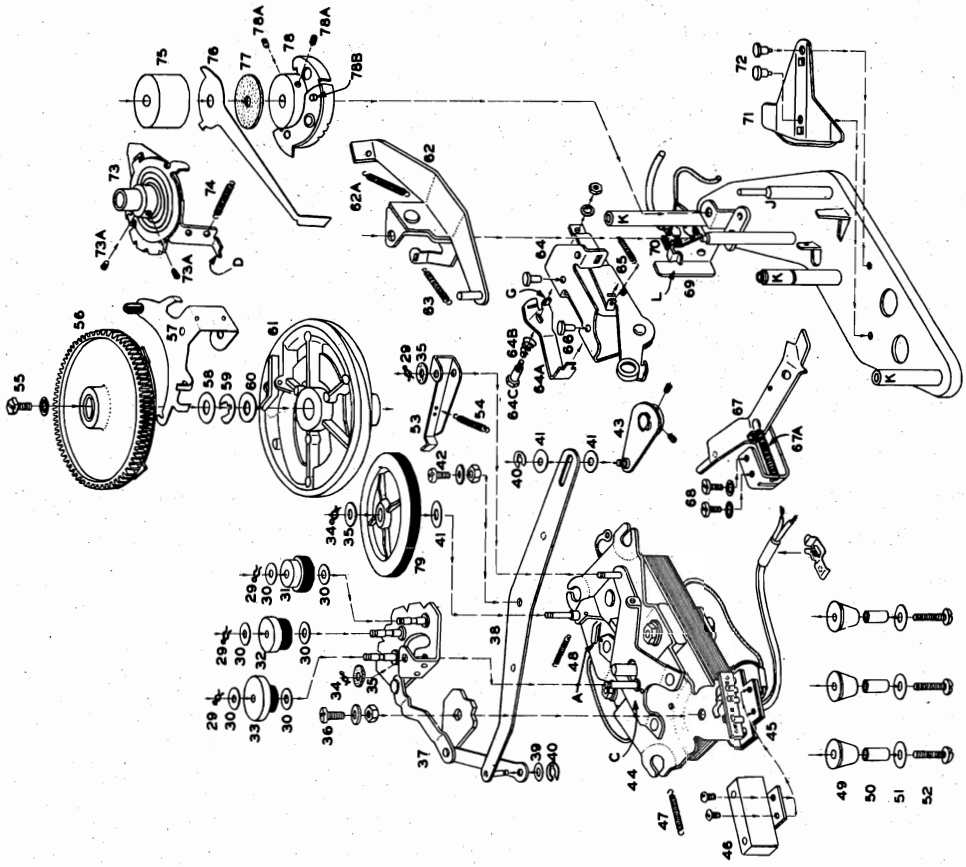

Fig. 8
Exploded View below Main Plate

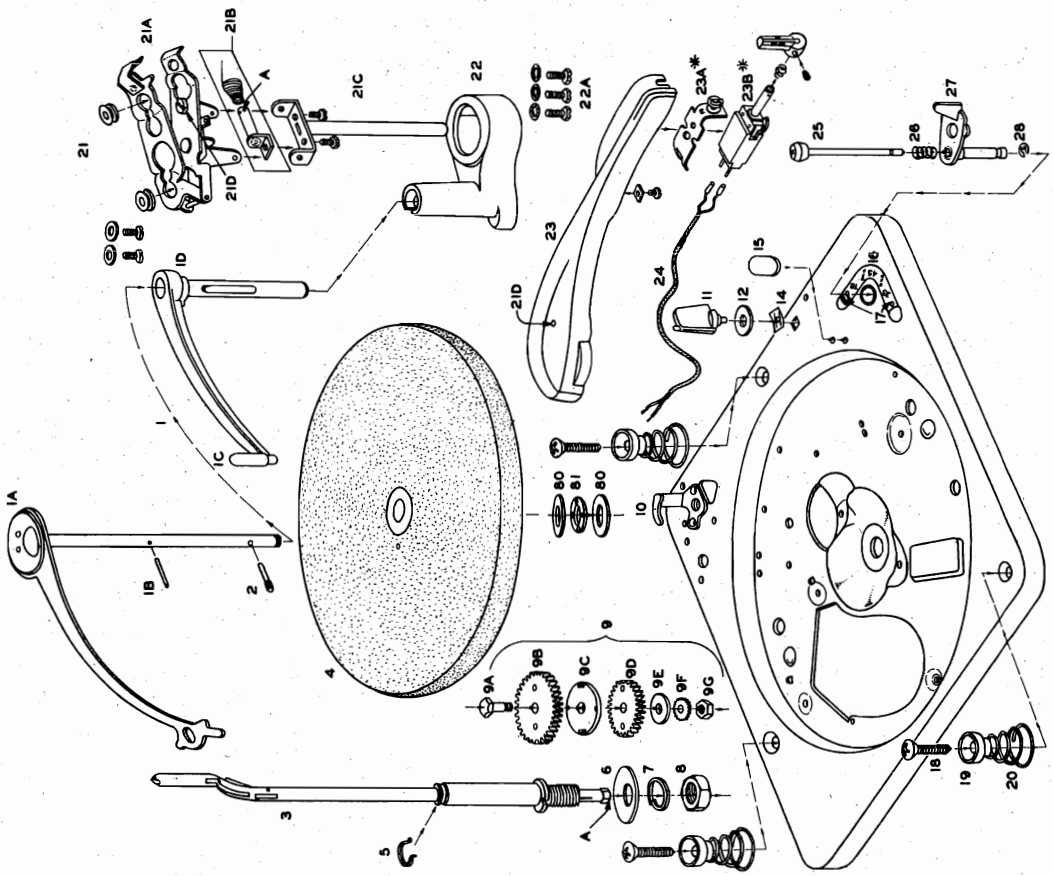

Fig. 7
Exploded View above Main Plate

©John F. Rider

Compliments of www.nucow.com

MODELS 100, 100-55, 100-62, 100-64, 100-557

LUBRICATION

Model 100 Record Changers leave the factory completely oiled and lubricated. Under normal conditions this should be sufficient for approximately one year or 1,000 hours of operation. When operated under extreme conditions of dust or heat, they should be oiled more frequently, as required.

Do not permit oil or grease to get on the rubber Idler Drive Wheel or the Motor Sleeve, on Turntable Drive Rim or on the Automatic Trip Arm clutch. Any oil or grease on these points should be removed using Carbon Tetrachloride. The recommended lubricants and points of lubrication are as follows:

A — No. 10 OIL (Apply With Small Oil Can or Medicine Dropper)

1. Motor Bearings.
2. Pickup Arm Shaft.
3. Ball Bearing Assembly.
4. Idler Wheel Felt.

B — A NON FLUID LUBRICANT (Apply With Small Brush)

1. Idler Wheel Link.
2. Turntable Shaft Stud.
3. Pickup Arm Hinge Pins.
4. Knife edge of Pickup Arm Raising Lever.
5. Teeth of Main Cam Actuating Gear.
6. Track of Main Cam Gear.
7. Teeth of Large and Small idler gears.
8. Raising lever Bracket bearing surface.
9. Spindle adjusting nut at bottom.

Figure Number	*Part Number*	*Description*
1	11X550	Record Ballast Arm and Index Finger Assembly —
1A	11X549	Record Ballast Arm
1B	41P731	Knurled Pin for 11X550
1C	24P048	Index Finger Cushion
1D	42X218	Index Finger Arm
2	41P743	Knurled Pin for 11X549
3	11X558	Spindle
4	11X138	Turntable
5	50P221	Retainer for Turntable
6	25P289	Cup Washer — Spindle Mounting
7	25P403	Lock Washer — Spindle Mounting
8	26P687	Nut — Spindle Mounting
9	11X132	Idler Gear Assembly
9A	41P333	Shoulder Screw
9B	47P024	Idler Gear — Large
9C	45P342	Coupler — for 11X132
9D	47P023	Idler Gear — Small
9E	25P284	Washer — for 11X132
9F	25P222	Lock Washer — for 11X132
9G	26P046	Nut — for 11X132
10	45P191	Stop Bracket for Pickup Arm
11	49P099	Pickup Arm Rest
12	25P388	Washer
14	26P554	Speed Nut
15	24P004	Needle Pad
16	78P508	Speed Indicator Dial
17	27P205	Rivet for Indicator Dial
18	26P740	Mounting Screw
19	24P007	Mounting Grommet
20	46P116	Mounting Spring
21	21X282	Pickup Arm Hinge and Shaft Assembly
21A	21X283	Pickup Arm Hinge
21B	11X386	Pickup Arm Counter Balance
21C	11X385	Pickup Arm Shaft
22	42P219	Housing
22A	26P747	Housing Mounting Screw
23	49X123-X	Pickup Arm
		The mounting bracket required will depend upon the cartridge used. Order exact replacement cartridges from your parts distributor by the cartridge manufacturer's part number, stamped on the cartridge. The mounting bracket need not be replaced when replacing the cartridge. Nor is the bracket usually included in the replacement cartridge package.
23A		
23B		
24	20X1363-1	Pickup Cord and Lug Assembly
25	49X135	Reject Button
26	46P226	Compression Spring — Reject Button
27	42X217	Speed Selector Lever
28	25P447	"C" Retainer for Reject Button
29	50P034	Reainer Clip
30	25P406	Fibre Washer
31	11X456	Drive Wheel — 33 R.P.M.
32	11X458	Drive Wheel — 45 R.P.M.
33	11X460	Drive Wheel — 78 R.P.M.

Figure Number	*Part Number*	*Description*
34	50P125	Retaining Clip
35	25P030	Felt Washer
36	41P673	Shoulder Screw — Switch Cam
37	17X481	Drive Wheel Mounting Plate and Cam
38	11X539	Speed Selector Arm
39	25P030	Felt Washer for 11X539
40	25P439	"C" Washer for 11X539
41	25P046	Fibre Washer
42	41P747	Shoulder Screw for 11X539
43	11X540	Speed Selector Link and Hub
44	17X467	Motor and Top Bridge Assembly
45	32P054	A.C. Switch
46	45P819	Switch Cover
47	46P139	Tension Spring — Index Plate
48	46P134	Tension Spring — Idler Link
49	25P363	Motor Mount Grommet
50	41P592	Motor Mount Sleeve
51	25P367	Motor Mount Washer
52	26P110	Motor Mount Screw
53	45P817	Speed Selector Lock Lever
54	46P187	Tension Spring — Lock Lever
55	26P748	Screw — Main Plate to Sub Plate Assembly
56	11X032	Main Actuating Gear
57	11X320	Velocity Trip
58	25P343	Washer — for 11X545
59	25P342	"C" Washer — for 11X545
60	25P083	Washer — for 11X545
61	11X545	Main Cam Assembly
62	11X553	Pickup Arm Raising Lever
62A	46P022	Tension Spring — Raising Lever
63	46P221	Tension Spring — Raising Lever
64	11X546	Cam Lever and Bracket — Complete
64A	45P921	Cycle Stop Arm
64B	46P218	Compression Spring
64C	41P746	Shoulder Screw for 11X546
65	46P017	Tension Spring for 11X546
66	27P072	Rivet for Cam Lever Mounting
67	11X542	Reject Trip Lever
67A	46P219	Tension Spring — Trip Lever
68	26P747	Screw — Trip Lever Mounting
69	45P926	Positioning Plate
70	70P045	Standoff Lug Assembly
71	45P909	Spindle Actuating Lever
72	27P217	Rivet for Mounting 45P909
73	11X547	Set Down Disc Assembly
74	46P225	Tension Spring — Set Down Disc
75	41P576	Clutch Weight
76	45P935	Velocity Trip Arm
77	23P009	Felt Washer — Velocity Trip
78	11X552	Pickup Arm Raising Disc
79	11X366	Idler Wheel
80	25P269	Washer — Bearing Race
81	11X058	Turntable Bearing

©John F. Rider

Compliments of www.nucow.com

MODELS 346, 355, 362, 364

MODEL 346

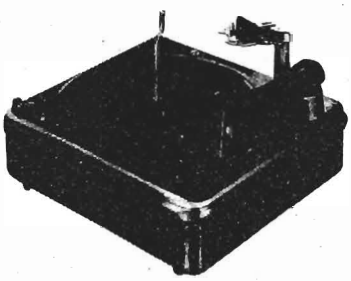

MODEL 355

MODEL 364

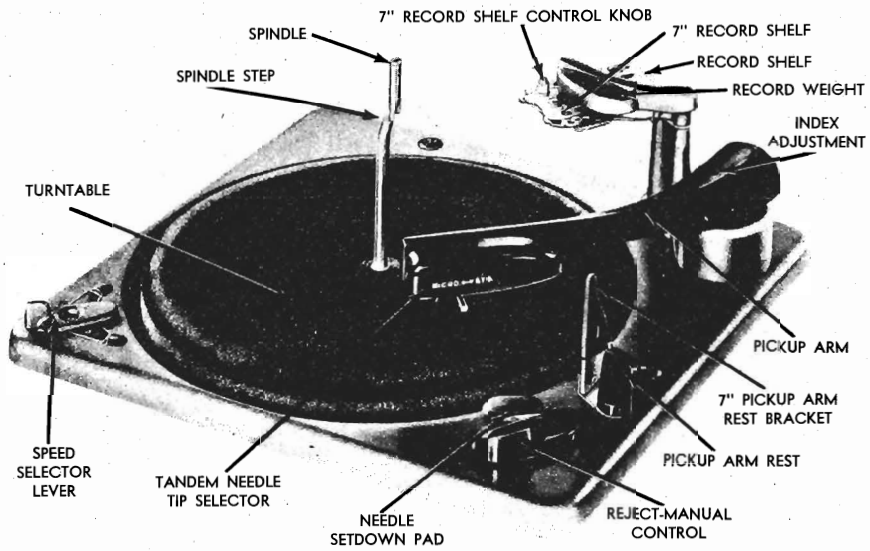

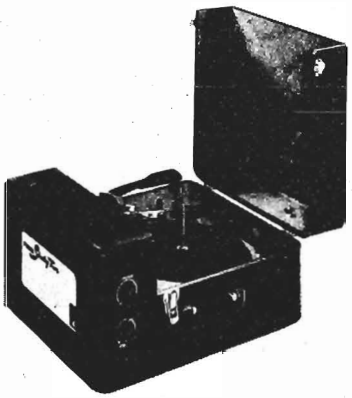

MODEL 362

DESCRIPTION

The Webster-Chicago Model 346-1 basic mechanism is a three speed, single post, spring cushioned spindle, automatic record changer. Simple in design and operation it provides automatic playing of up to a 1" stack of 7", 10" or 12" records at speeds of 33⅓, 45 or 78 rpm.

Model 346 returns the pickup arm to the rest position after playing the last 10" or 12" record, although the motor continues to revolve until the Speed Selector Lever is moved to the nearest "OFF" position. Two "OFF" positions are available for ease of operation. The idler wheel is also pulled away from the motor shaft when the Speed Control Lever is in an "OFF" position, eliminating the possibility of a flat spot developing on the rubber wheel.

The last 7" record of a stack continues to play until the Speed Selector Lever is moved to one of the "OFF" positions and the Pickup Arm moved from the record to the Rest Position.

Automatic playing of 7" records is made possible by a simple, ingenious 7" record shelf which is easily placed on the Record Selector Post and by a movable 7" Pickup Arm Rest which can be swung into or out of position.

Model 346 also features the exclusive Webster-Chicago Velocity-Trip Mechanism. The pickup arm is not actuated by "lead-in" springs and there is a minimum of lateral pressure. The arm travels freely in either direction. This lack of lateral pressure or inertia adds immeasurably to the life of records and is considered to be as important as extra-light vertical pressure. The freefloating arm permits "home recordings" or "inside out" records up to 12" size to be played manually.

Model 346 will change warped or rough-edged records, at the same time assuring maximum protection to the finest discs.

Model 362 automatic phonograph is a Model 346 mechanism mounted in an attractive burgundy leatherette case, together with an amplifier and speaker. The circuit diagram of Model 362 is included in the operating instructions.

Model 364 is a Model 346 mounted in an attractive burgundy leatherette carrying case.

Model 355 is a Model 346 mounted on an attractive metal base.

These service instructions apply to all four models, 346-1, 355, 362 and 364.

PICKUP CARTRIDGE

The special pickup cartridge of Model 346 has a replaceable Tandem-Tip Needle. The lever on the cartridge is moved to "Std" or "Micro", as indicated on the pickup arm, to lower the proper point into playing position. All 78 rpm and some 33⅓ rpm records including "Books for the Blind", require the "Standard" point. The 33⅓ rpm Microgroove and 45 rpm records require the "Micro" point.

The special cartridge has been designed to play 78 rpm as well as 45 rpm and 33⅓ rpm records at very light needle pressures.

© John F. Rider

Compliments of www.nucow.com

MODELS 346, 355, 362, 364

OPERATION

MOTOR

Connect the motor cord to a source of 105-115 volt 60 cycle current only. If it is desired to operate the changer on 50-cycle current, a special motor shaft sleeve must be used in order to drive the turntable at the required speed.

Do not under any circumstances connect the motor to a source of direct current (DC) or alternating current of any other frequencies.

The motor switch is part of the Speed Control Lever. The power is off when the lever is in an "OFF" position.

FOR AUTOMATIC RECORD CHANGE

1. Move the Tandem-Tip Selector Lever to "Std" or "Micro" as explained in the description of the pickup cartridge above.
2. Turn the Record Shelf forward or back for ten- or twelve-inch records. For 7-inch records, turn the Record Shelf forward to the 10-inch position. Place the 7-inch Record Shelf in position with the Record Selector Knob turned to "45" or "33" as required. Move the Pickup Arm to the Spindle, then raise the 7-inch Pickup Arm Rest straight up and return the Pickup Arm to the 7-inch Rest position.
3. With the record ballast weight lifted and turned forward out of position, place up to a 1" stack of records on the spindle so that the bottom record rests on the step of the spindle and on the Record Shelf.
4. Turn the record ballast weight and lower it until it rests on the top record or the 7" Record Shelf.
5. Move the Speed Control Lever to "33⅓", "45" or "78", as required by the record being played. This also turns the motor power on.
6. Move the "Manual-Reject" Control Knob to the "Reject" position, and release it. The control will then drop back into the automatic playing position and the mechanism will continue to operate automatically until the last record is completed. The Pickup Arm will then return to the "Rest" position and the motor will continue to revolve until the Speed Control Lever is turned to an "OFF" position. Seven-inch records will continue to play until the Speed Control Lever is moved to an "OFF" position and the Pickup Arm is lifted to the 7-inch Rest position.
7. To reject any record while playing in the automatic position, move the control knob momentarily to the REJECT position and release.

After the last record has been played, the entire stack may be removed from the turntable at one time. The simplest procedure is as follows:

a. Place the Pickup Arm on the Pickup Arm Rest.
b. Lift and turn the record ballast weight out of position.
c. Place the fingers of both hands under opposite edges of the bottom record.
d. Do not apply pressure to the top record (Keep your thumbs free.)
e. Lift the stack of records straight up, following the contours of the spindle. This permits the stack of records to follow the curve of the spindle without binding and greatly facilitates the removal of the stack.

FOR "MANUAL" RECORD CHANGE

1. Turn the Record Shelf to the "12" position. (This is not essential but permits more clearance in loading and unloading records.)
2. Move the Tandem-Tip Selector Lever to "Std" or "Micro" as required. See the paragraph "Pickup Cartridge".
3. Place a record on the turntable.
4. Move the "Manual-Reject" Control Knob toward the spindle to the "Manual" position, as indicated by the arrow on the Control Knob. No harm will result if the knob is accidentally moved to the "Reject" position. If a twelve-inch record is on the turntable, the arm will automatically index to the edge of the record. If a ten-inch record is on the turntable, the needle will be set down gently on the rubber pad and the arm may be moved to the edge of the record.
5. Move the Speed Control Lever to the proper position as required by the record being played.
6. Place the needle gently on the edge of the record.
7. To stop the mechanism at any time, turn the Speed Control Lever to an "OFF" position.

©John F. Rider

Compliments of www.nucow.com

MODELS 346, 355, 362, 364

SERVICE INFORMATION

All units are accurately adjusted, lubricated and tested at the factory. However, service repairs and adjustments sometimes become necessary. This bulletin should be studied carefully before making any adjustments or replacing parts.

Service parts are available from your Webster-Chicago distributor. All parts must be ordered by piece part number and also record changer model and production number, stamped on the under side of the main plate.

The functions and most probable misadjustments of the main assemblies are as follows (reference numbers refer to the exploded views on pages 12 and 14):

THE AUTOMATIC TRIP FAILS TO FUNCTION

The Main Cam Assembly (32) and Actuating Gear (31) are the heart of the record changer. The Main Cam Assembly drives the mechanism associated with the action of the Pickup Arm (7) and the Record Selector assemblies. It, in turn, is driven by the gear train (28, 29, 30) and the Turntable which is rim driven by the phonograph motor.

The Main Cam Assembly and Actuating Gear is put in motion or "tripped" by means of the "automatic" trip or by the manually operated "reject" trip. When the movement of the Pickup Arm toward the spindle is greater than 1/8" in 1/2 revolution of the turntable, the Automatic Trip Arm (35) trips the Velocity Trip and Roller Assembly (33). This releases the Actuating Pawl on the Main Cam Assembly (32), allowing it to engage the Main Cam Actuating Gear (31) and driving it through the change cycle. The pressure from the Automatic Trip Arm required to actuate the trip mechanism is negligible.

The Automatic Trip Arm follows the movement of the Pickup Arm through a weighted friction clutch (34). This clutch must be kept free of oil and grease. If the clutch does not cause the Automatic Trip Arm to trip the mechanism, clean the clutch parts with carbon tetrachloride. This clutch should operate the trip mechanism without placing undue drag on the movement of the pickup arm.

Also check for:

1. Velocity Trip and Roller Assembly (32) binding.
2. Slight burr on end of the Actuating Pawl or on the underside of the hook end of the Velocity Trip and Roller Assembly.
3. Actuating Pawl stuck (part of Main Cam Assembly (32) engaged by the hook end of the Velocity Trip and Roller Assembly (33).
4. Automatic Trip Arm (35) bent and not hitting the Velocity Trip and Roller Assembly (33).
5. Automatic Trip Arm (35) fails to touch the Velocity Trip and Roller Assembly.
6. Velocity Trip and Roller Assembly (33) rubbing on the underside of the Main Cam Actuating Gear (31).
7. No velocity lead-in groove or eccentric groove in the center of record.

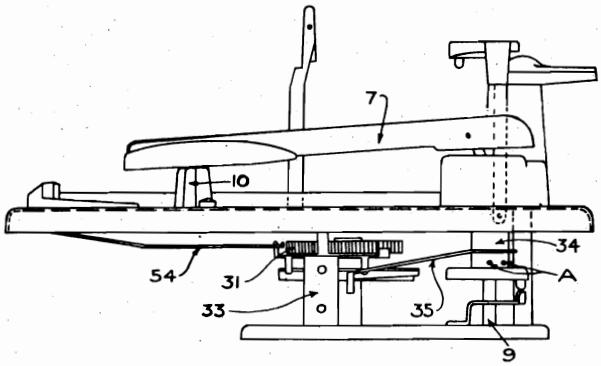

Fig. 1

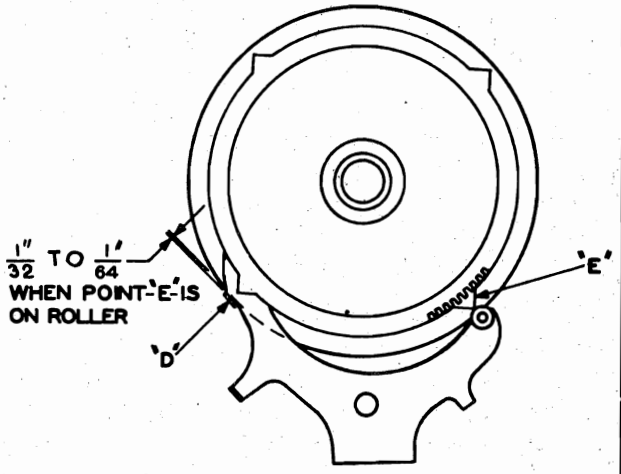

ADJUST IF NECESSARY BY BENDING AT POINT "D"

Fig. 2

©John F. Rider

Compliments of www.nucow.com

MODELS 346, 355, 362, 364

8. Foreign matter in record groove.
9. Badly worn record.
10. Badly bent or worn needle.

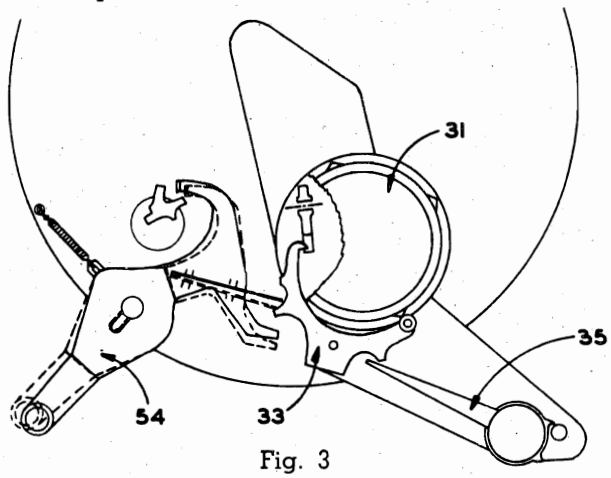

Fig. 3

IF THE "REJECT" TRIP FAILS TO FUNCTION

When the control knob is moved to the extreme REJECT position, the hair spring of the Reject Trip Lever Arm (54) actuates the Velocity Trip and Arm Assembly, putting the change mechanism in cycle. See Fig. 3.

Check for:

1. "Reject" trip hair spring of Lever 54 bent or broken.
2. Velocity Trip and Roller Assembly (33) binding.
3. Actuating Pawl (32) stuck (part of Main Cam Assembly).

IF THE MECHANISM CONTINUES TO CYCLE

At the completion of the change cycle, the Actuating Pawl is disengaged from the Main Cam Assembly Actuating Gear by the hook end of the Velocity Trip and Roller Assembly, which has been returned to its normal position by the reset points on the Main Cam Drive Gear, Fig. 2.

If the clearance between the lip on the Velocity Trip Lever and the edge of the Main Cam is too small, it will prevent the hooked end of the Velocity Trip Lever from engaging the trigger. Adjust the clearance between the lip ("D" of Fig. 2) on the Velocity Trip Lever and the Main Cam to be within 1/32" and 1/64" when the roller is contacting the point of one of the reset points on the Actuating Gear.

Also check for:

1. Velocity Trip and Roller Assembly (33) rubbing on Main Cam Actuating Gear (31).
2. Manual Trip Lever (54) binding.
3. "Disengage Roller" broken on Velocity Trip and Roller Assembly (33).

PICKUP ARM LIFT TOO HIGH OR TOO LOW

The vertical movement of the pickup arm is controlled by the angle of the pickup arm raising lever (37 and Fig. 4). The needle should approach the top record of a full 1" stack of records on the turntable with approximately 1/16" clearance.

To adjust:

1. Put a full 1" stack of records ON THE TURNTABLE.
2. Trip the "Reject" control and rotate the turntable clockwise until the needle clears the top record of the stack by about 1/16".
3. Be sure the front or 10" notch in the pickup arm raising disc engages the pickup arm raising lever.
4. If the needle does not clear the top record or if it raises too high, adjust by holding the pickup arm raising lever (37) at point X and bending at Y as indicated in Fig. 4.

CAUTION: All adjusting bends should be made slowly, using slight but firm, easy pressure.

Be sure the set screws in the Pickup Arm Raising Disc (36) are not loose and are properly positioned in the alignment holes as explained in the paragraph on Needle Setdown Indexing.

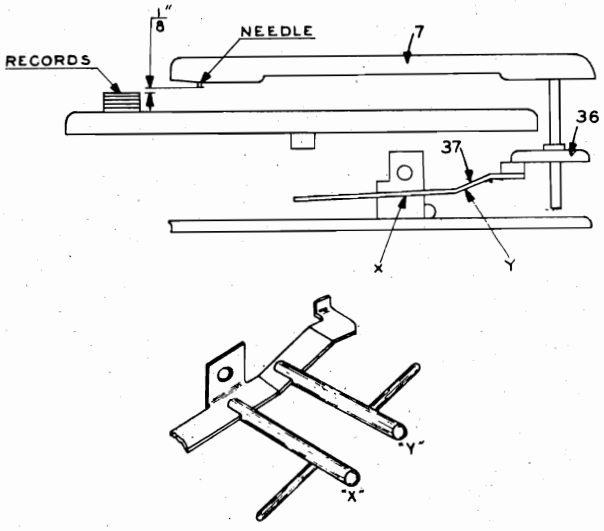

Fig. 4

©John F. Rider

Compliments of www.nucow.com

MODELS 346, 355, 362, 364

NEEDLE SET DOWN POINT INCORRECT

The pickup arm should set the needle down just outside the "lead-in groove" of the record.

The horizontal movement of the pickup arm (7) is controlled by the eccentric excursion of the Pickup Arm Raising Lever (37) moving the Pickup Arm Raising Disc (36) when actuated by the Main Cam Assembly (32). The eccentric screw (part of 8) accessible through the top of the pickup arm (7), should take care of any normal position adjustment. Turn this screw clockwise to index the needle in toward the spindle and counter-clockwise to index the needle out away from the spindle.

Should further adjustment be necessary, proceed as follows:

1. Set the eccentric screw, just mentioned, to a middle position.
2. Set the Record Shelf (4) to the 10" position.
3. Operate the mechanism by revolving the turntable manually until the needle drops to within ⅛" of a ten-inch record on the turntable.
4. Be sure the notch in the Pickup Arm Raising Disc (36) engages the Pickup Arm Raising Lever (37).
5. The No. 8 Bristol set screws "A" of the Pickup Arm Raising Disc (36, Fig. 1) have pointed ends which fit into the off center holes in the Pickup Arm Shaft (9). Alternately loosen one screw and tighten the other until the needle rests above the record lead-in groove at the desired point. Be sure that both set screws are tight when this adjustment is completed.
6. Complete the change cycle of the mechanism and place the pickup arm on the Pickup Arm Rest (10). The tongue of the Pickup Arm Raising Disc (36) should now rest against the post which supports the sub plate assembly. If the pickup arm does not rest in the proper position on the pickup arm rest, bend the tongue closer to or away from this post until the pickup arm is correctly positioned.

   REMEMBER: Always slight but firm, easy bends!
7. Turn the Record Shelf to 12" and check the needle drop on a twelve-inch record. Make any additional adjustments with the eccentric screw mentioned previously.
8. Move the pickup arm to the center of the turntable, trip the mechanism and turn the turntable by hand. Move the pickup arm until the outside or 7" notch of the pickup arm raising disc (36) engages the pickup arm raising lever (37). Continue to revolve the turntable until the arm reaches the end of its outward movement. Raise the 7" pickup arm rest (77) and bend it in or out until it just touches the side of the arm. This adjusts the 7" needle set down point.

ERRATIC INDEXING

Whether the needle sets down in the 10" or the 12" position is controlled through the presence or absence of pressure from the Compression Spring (45), on the Pickup Arm Raising Lever bracket. Pressure forces the stud to travel the inside edge or the outside edge of the groove in the bottom of the Main Cam. The compression on this spring is changed as the Record Shelf is changed from the 10" to the 12" position. Improper adjustment of the spring tension will result in erratic indexing.

In the 12" position, the spring should be just free. In the 10" position the compression of the spring holds the stud of the Pickup Arm Raising Lever against the outside edge of the groove. If the compression tension needs adjustment:

Bend the Metal finger, through which the spring arm (45) fits, to give a "sloppy" fit of spring "45" when the Record Shelf is in the "back" or "12" position.

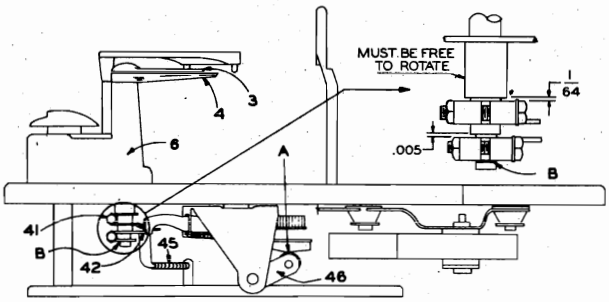

Fig. 5

MORE THAN ONE RECORD IS DROPPED DURING A CHANGE CYCLE

The floating latch at the top of the Record Spindle is so spaced that only one record at a time can slide between the heel of the latch and the step of the spindle. The hole in the latch is elongated so that the latch can slip into the spindle recess when records are being removed.

If more than one record is dropped at a time, it will be found to be due to:

1. Foreign matter in spindle recess causing the latch to stick.
2. Exceptionally thin records.

©John F. Rider

Compliments of www.nucow.com

MODELS 346, 355, 362, 364

CHANGE CYCLE STARTS WHEN NEEDLE TOUCHES RECORD (10" or 7" Records)

1. The velocity trip arm (35) may be too close to lip "B" of velocity trip (33) at the instant of contact of the needle with the record. There should be at least 1/64" clearance between the velocity trip arm and the velocity trip. Carefully bend lip "B" in to provide proper clearance. However, do not in any way bend the velocity trip at any other point. Improper bending may cause binding and constant tripping of the mechanism.

TO ADJUST SPEED SELECTOR LEVER POSITION

1. Loosen set screw of coupling (69).
2. Move idler assembly (67) to 45 rpm position.
3. With the Speed Selector Lever opening over "45" tighten the set screw.

INCORRECT TURNTABLE SPEED

The three speed mechanism and the motor are one assembly. The speed selector idlers (64, 65 and 66) are mounted on a movable metal plate (67) in such a way that moving the Speed Selector Lever (74) moves the correct idler into position between the motor shaft and the Turntable drive idler (78). The tongue of the detent spring (68) fits into indentations in the edge of the metal plate to index the speed selector idlers and hold them firmly in the desired position.

"OFF" indentations between each speed position hold the idlers away from the motor shaft and the Turntable idler when the Speed Selector Lever is in an "off" position.

If the Turntable speed is incorrect, check for:

1. Turntable Idler (78) cocked at an angle. Bend the wheel and shaft to straighten wheel. CAUTION: Do not bend idler (78) toward the speed selector idlers (64, 65, 66). Bend only sideways or away from the small idlers.
2. The idler mounting assembly (part of motor assembly 49) must not bind. There should be at least 1/64" play at point "A". Bend the raised metal stop if more clearance is needed.
3. The entire motor assembly (49 plus 67, etc.) should be free floating. There should be slight play of the Speed Control Lever (70) between the "78" and "33" positions and the stops at the end of the speed selector dial. If there is any binding, loosen set screw of coupling (69) and retighten with the tongue of the detent spring (68) in the proper position.

ERRATIC SPEED (WOW)

Remove any dirt or excess flocking from the inside rim of the turntable. Check the rubber idler wheel for a flat spot or "out of round".

If the rubber part of either Drive wheel becomes slick and shiny — Replace.

STALLS DURING CHANGE CYCLE

See Above.

GLIDE-IN ON 12" RECORDS

The term "glide-in" is used to describe the action of the pickup arm and needle when the needle does not sit down smoothly in the first groove of the record, despite accurate indexing adjustments, but seems to glide over the first two or three grooves before seating itself properly. If glide-in occurs:

1. Check tension of compression spring (45). The spring should be free in 12" position at the moment the needle sets down on the record.
2. Remove any cause of friction in index lever (45) by bending the "eye" of (37).
3. On Model 355, pulling the metal base up snug to the main plate may put too much tension on the compression spring (45). Be certain spring (45) is very free.
4. The pickup cord may be dressed too tight or in such a manner that it interferes with the free movement of the pickup arm. Make certain there is sufficient play in the pickup cord.

SLIDE-IN OR NEEDLE JUMPS GROOVES

Slide-in describes the condition where the needle will touch the first groove of the record properly but will jump the grooves forward or back as though the needle pressure was too light.

To correct slide-in, check for:

1. Incorrect needle tip. The standard tip will be especially likely to jump grooves of a microgroove record. Be certain the "micro" tip is used for either the 33⅓ or 45 rpm microgroove records.
2. Chipped or damaged needle.
3. Tight pickup cord.

RECORD FAILS TO DROP

The record must leave the spindle step just prior to or at least by the time it leaves the record shelf. If the spindle is too far from the record shelf, the record will hang up on the spindle step and fail to drop.

To adjust.

With a rubber mallet, hit the part of the housing (6) which covers the push-off assembly (3 and 4) hard enough to jar it nearer or farther away from the spindle. With a record on the spindle and record shelf there should be about 1/16" clearance between the push-off blade (3) and the record.

©John F. Rider

Compliments of www.nucow.com

MODELS 346, 355, 362, 364

CHANGE CYCLE STARTS BEFORE END OF RECORD

If the Trip Assembly chatters while the changer is running or if the changer cycles before the entire record is played, there is probably insufficient clearance between the hook end of the Velocity Trip and Roller Assembly and the actuating gear. This clearance should be adjusted to be within 1/32" to 1/64" by bending the lever at point "C" as shown in Fig. 6.

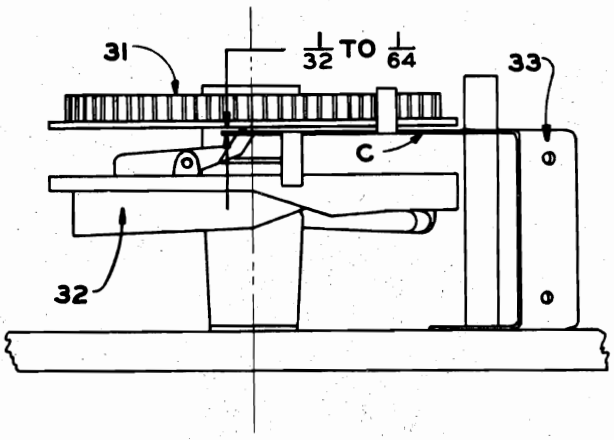

Fig. 6

LAST RECORD REPEATS

The weight of the records on the Spindle keeps the Automatic Shut Off Lock Lever (59) from dropping and engaging the Pickup Arm Raising Disc. The dropping of the last record releases the Automatic Shut Off Lock Lever, permitting it to engage the Pickup Arm Raising Disc and prevent the Pickup Arm from moving onto the record. The Pickup Arm then comes to rest on the Rest Button.

If the last record continues to play:

1. Check the Spindle to be sure that it moves up and down freely.
2. With no records on the Spindle, and with the mechanism at rest, the hook "D" of the Automatic Shut Off Lock Lever (59) should clear the top of the Pickup Arm Raising Disc by 1/32". Adjust, if necessary, by bending the Automatic Shut Off Lock Lever slightly.

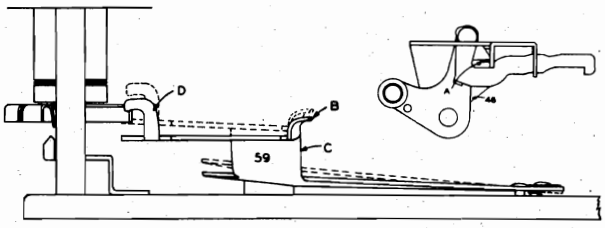

Fig. 7

LAST RECORD WILL NOT PLAY

As explained above, the weight of records on the spindle prevents the Automatic Lock Lever (59) from dropping. As the Cam Lever and Bracket assembly (46) moves forward to engage the Push-off Blade Actuating Lever (42), Fig. 5, point A of the Cam Lever (46), Fig. 7 should also move forward under point B of the Automatic Shut Off Lock Lever (59) to make certain it does not drop until the last record has dropped to the turntable and the Pickup Arm is in position to play. If point A does not engage point B, the Lock Lever (59) will drop to engage the Pickup Arm Raising Disc (36) and the Pickup Arm will return to the rest position without playing the last record.

To adjust, bend B so they engage properly. It may be necessary to bend (46) at point C, then readjust point D so it engages the Pickup Arm Raising Disc (36) correctly.

REPLACEMENT OF PARTS

TO REPLACE THE PICKUP ARM

1. Unhook the pickup arm hinge clip (8) and raise the arm to a vertical position.
2. Remove the two mounting screws. Remove the pickup arm.
3. Attach the new arm.

The weight of the arms is uniform so the needle pressure adjustments should be left alone.

REPLACE PICKUP ARM BRACKET AND SHAFT ASSEMBLY

1. Loosen Bristol screws in Pickup Arm Raising Disc (36).
2. Remove Disc washer (55), Automatic Trip Arm (35) and Clutch (34) by sliding them off the bottom of the Pickup Arm Shaft (9) and pull shaft out of changer from above.

To replace, reverse the procedure and adjust the Pickup Arm Raising Disc for proper indexing as explained on page 7.

TO REPLACE THE CARTRIDGE

1. Remove the two mounting screws, one on each side of the cartridge, and carefully remove pickup cord tips from cartridge pins.
2. Remove the old cartridge and replace with the new one.

©John F. Rider

Compliments of www.nucow.com

MODELS 346, 355, 362, 364

Be certain the cartridge is parallel with the side of the pickup arm.

TO REPLACE THE NEEDLE

1. Loosen the needle set screw, using a small screw driver.
2. Remove the needle.
3. Insert the new needle with the flat side of the needle toward the set screw. Be sure the needle shank is all the way in to the bottom of the needle hole.
4. Tighten the set screw. The needle point should be parallel to the sides of the needle slot and evenly spaced between the walls of the slot.

TO REPLACE THE MOTOR

It is not necessary to replace the entire Three Speed mechanism when replacing the motor. However, it is necessary to remove the entire assembly from the main plate and then remove the motor from the assembly.

1. Remove the entire assembly by removing mounting screws (53) and retaining clip (23, part of 69).
2. Remove the Turntable Drive Wheel (78), the detent spring (68) and tension spring (74).
3. Remove the Three Speed mechanism plate assembly (67). Do not remove the small idler wheels (64, 65, 66) from the plate.
4. Reassemble new motor to the Three Speed Mechanism plate and the entire assembly to the main plate.
5. It may be necessary to adjust the play of the Three Speed Mechanism mounting plate "C" (part of the motor 49), so there is proper play between the sliding stop and the metal stop at point "A" (see page 13). The mounting plate should be free, approximately 1/64" clearance between the sliding stop and point "A". The Speed Selector Lever (74) should be in the "78" position when making this adjustment. See paragraph 2 of "Incorrect Turntable Speed"

LUBRICATION

Model 346 Record Changers leave the factory completely oiled and lubricated. Under normal conditions this should be sufficient for approximately one year or 1,000 hours of operation. When operated under extreme conditions of dust or heat, this operation should be performed more frequently as required.

Do not permit any oil or grease to get on the rubber Idler Drive Wheel or the Motor Sleeve, on Turntable Drive Rim or on the Automatic Trip Arm clutch. Any oil or grease on these points should be removed using Carbon Tetrachloride. The recommended lubricants and points of lubrication are as follows:

A — No. 10 OIL (Apply With Small Oil Can or Medicine Dropper)

1. Motor Bearings.
2. Pickup Arm Shaft.
3. Ball Bearing Assembly.
4. Idler Wheel Felt.

B — A NON FLUID LUBRICANT (Apply With Small Brush)

1. Idler Wheel Link.
2. Turntable Shaft Stud.
3. Pickup Arm Hinge Pins.
4. Knife edge of Pickup Arm Raising Lever.
5. Main Cam Bearing. (It is necessary to remove the sub-plate assembly to lubricate this bearing.)
6. Teeth of Main Cam Actuating Gear.
7. Track of Main Cam Gear.
8. Teeth of Large and Small idler gears.
9. Raising lever Bracket bearing surfaces.

AVOID EXCESSIVE LUBRICATION

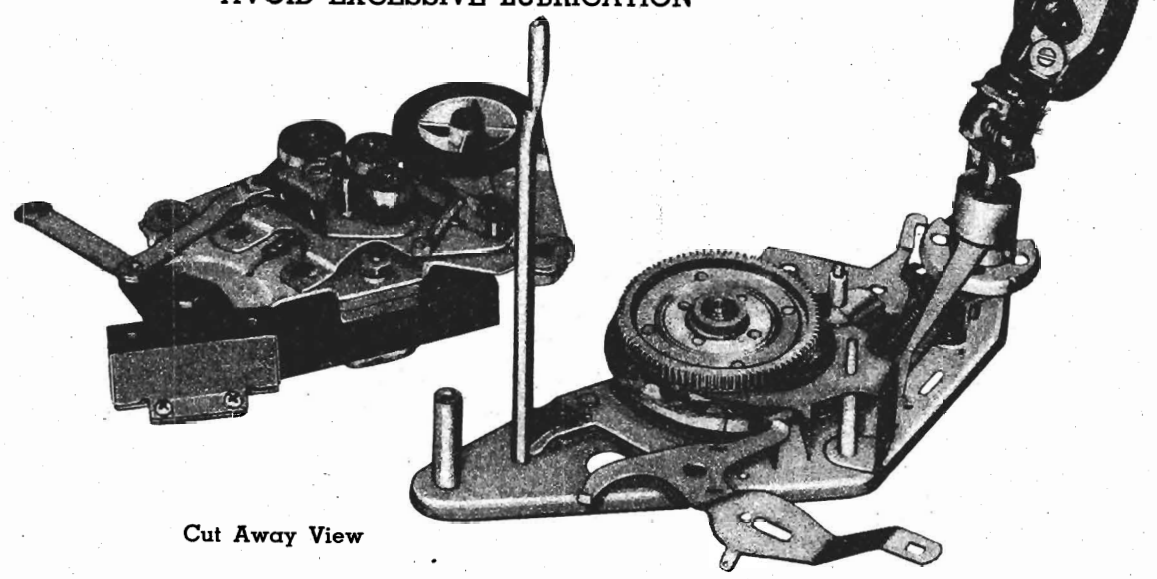

Cut Away View

©John F. Rider

Compliments of www.nucow.com

MODELS 346, 355, 362, 364

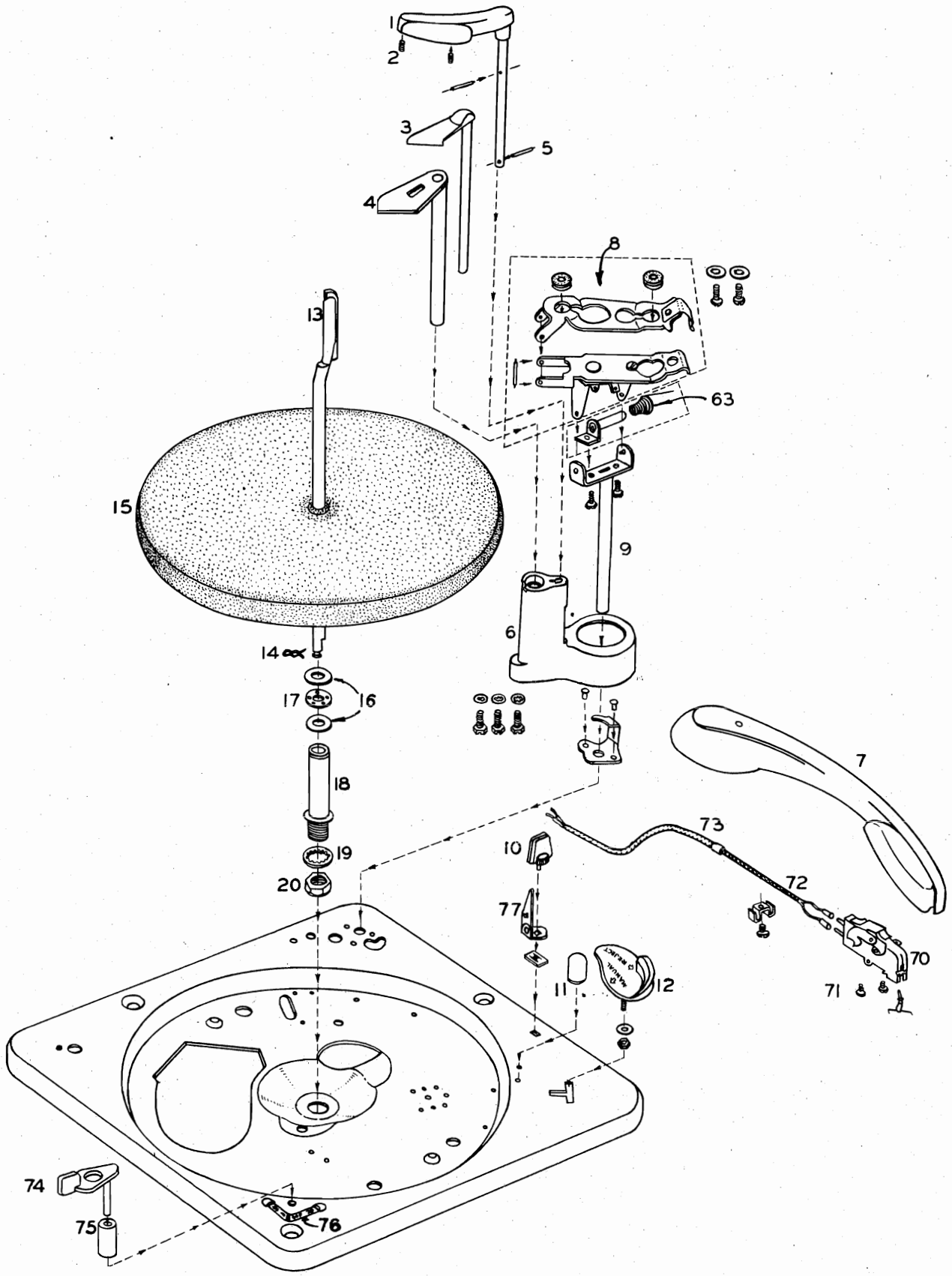

Exploded View above Main Plate

©John F. Rider

Compliments of www.nucow.com

MODELS 346,
355, 362, 364

REPLACEMENT PARTS LIST

Illustration No.	Part No.	Description
1	42X196	Record Weight Assembly
2	24P013	Record Weight Cushion
3	42X183	Push Off Blade
4	42X184	Record Shelf
5	27P157	Record Weight Groove Pin
6	42P199	Housing
7	49X123	Pickup Arm
8	21X283	Pickup Arm Hinge Assembly
9	11X385	Pickup Arm Shaft
10	49P099-C	Pickup Arm Rest
11	24P004-C	Needle Pad
12	49X089-C	"Reject-Manual" Lever
13	11X358	Spindle
14	50P204	Spindle Retainer Clip
15	11X292-C	Turntable
16	25P269	Bearing Race Washer
17	11X058	Bearing Race
18	41P414	Turntable Bearing
19	25P333	Turntable Bearing Lock Washer
20	26P687	Turntable Bearing Nut
63	11X386	Pickup Arm Counterbalance Spring
70		Cartridge
71	26P474	Cartridge Mounting Screw
72	20X1264-4	Light Pickup Cord Assembly — Internal
73	20P811-60	Heavy Pickup Cord Assembly — External
74	42X205	Speed Selector
75	41P669	Bushing
76	78P454	Speed Indicator
77	11X481	7" Rest Assembly

©John F. Rider

Compliments of www.nucow.com

MODELS 346, 355, 362, 364

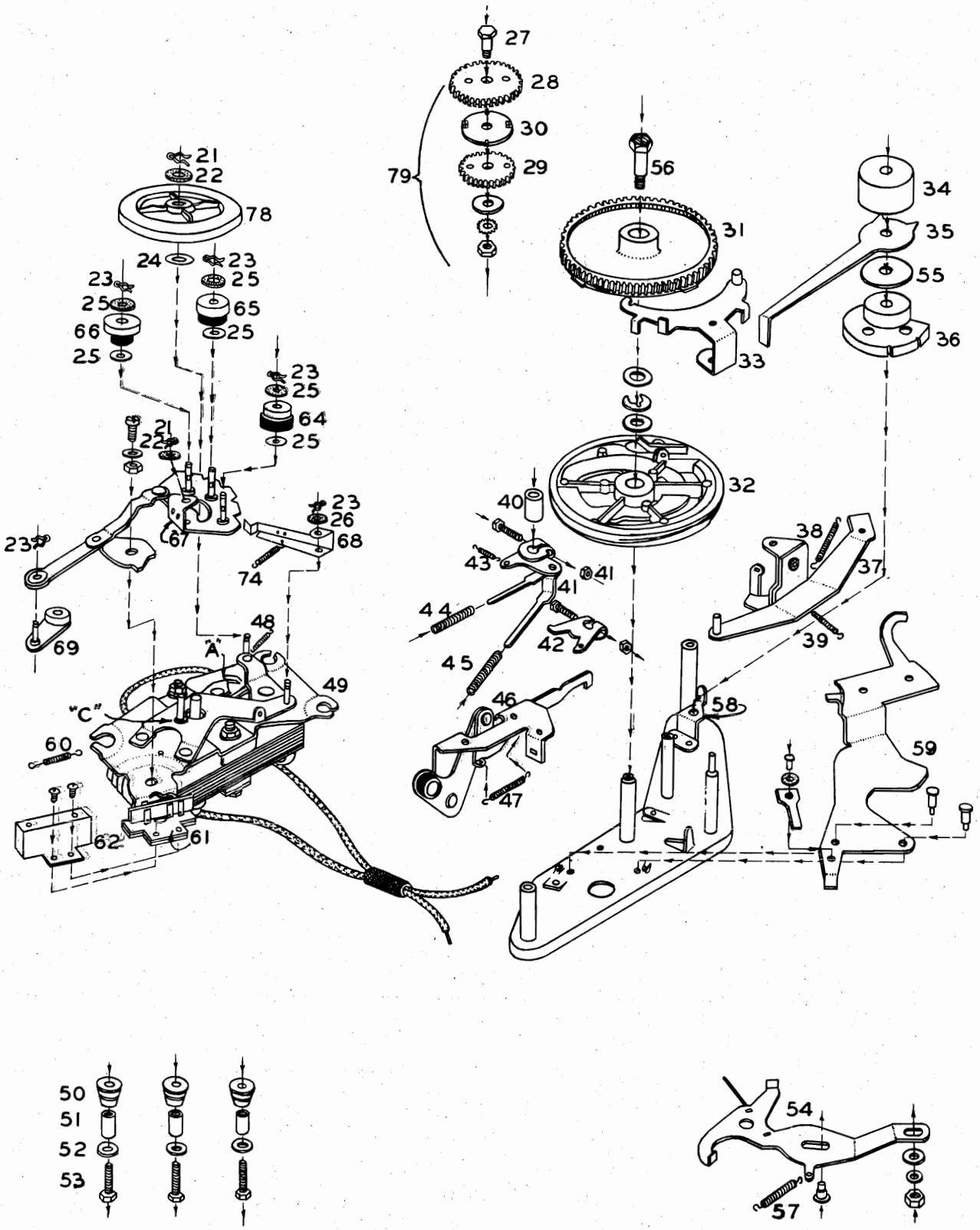

Exploded View below Main Plate

©John F. Rider

Compliments of www.nucow.com

MODELS 346,
355, 362, 364

REPLACEMENT PARTS LIST

Illustration No.	Part No.	Description
21	50P125	Spring Clip
22	25P030	Felt Washer
23	50P034	Spring Clip
24	25P046	Fibre Washer
25	25P406	Fibre Washer
26	25P407	Felt Washer
27	41P333	Shoulder Screw
28	47P024	Large Idler Gear
29	47P023	Small Idler Gear
30	45P342	Idler Gear Coupler
31	11X032	Trip Resetting Gear Assembly
32	11X033	Cam and Trigger Assembly
33	11X320	Velocity Trip
34	41P576	Velocity Trip Clutch Weight
35	45P568	Automatic Trip Arm
36	11X227	Pickup Arm Raising Disc
37	11X046	Pickup Arm Raising Lever
38	46P044	Tension Spring
39	46P139	Tension Spring
40	41P607	Spacer
41	11X287	Lever and Toggle Assembly
42	11X312	Push-off Blade Actuating Lever
43	46P162	Tension Spring
44	46P151	Compression Spring
45	46P152	Compression Spring
46	11X319	Cam Lever and Bracket Assembly
47	46P158	Tension Spring
48	46P134	Idler Link Tension Spring
49	17X467	Motor and Top Bridge Assembly
50	25P363	Motor Shock Mounts
51	41P592	Motor Mount Sleeve
52	25P367	Motor Mount Washer
53	26P110	Motor Mount Bolt
54	11X291	Trip Lever and Wire Assembly
55	23P009	Friction Disc
56	41P333	Stud Mounting Screw
57	46P117	Tension Spring
58	45P347	Pickup Arm Pivot Bracket
59	11X316	Automatic Shut Off Lock Lever
60	46P139	Tension Spring
61	32P054	Switch and Bracket Assembly
62	45P819	Switch Cover
64	11X456	Drive Wheel — 33⅓ R.P.M.
65	11X458	Drive Wheel — 45 R.P.M.
66	11X460	Drive Wheel — 78 R.P.M.
67	17X464	Index Plate and Cam Assembly
68	45P817	Index Lock Lever
69	17X466	Hub and Lever Assembly
78	11X366	Idler Wheel
79	11X132	Complete Gear Assembly
80	50P221	Turntable Retaining Ring

©John F. Rider

Compliments of www.nucow.com

MODELS 356-1, 356-27, 357-1

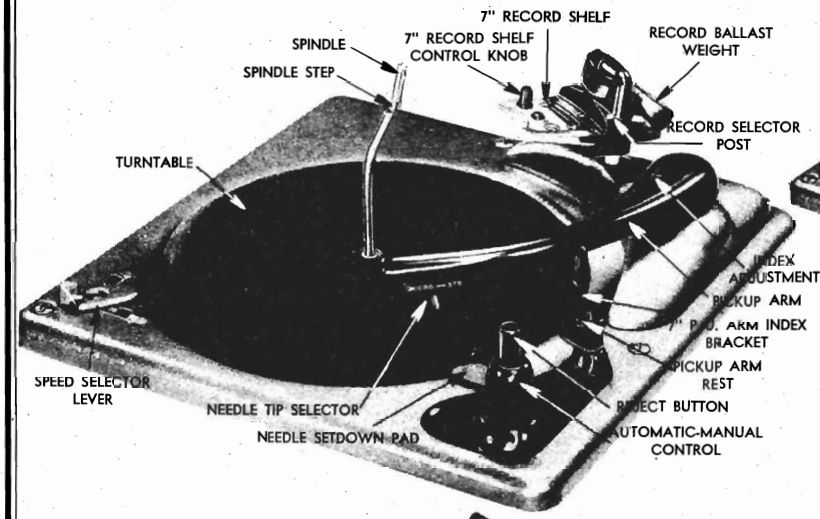

Model 356-1

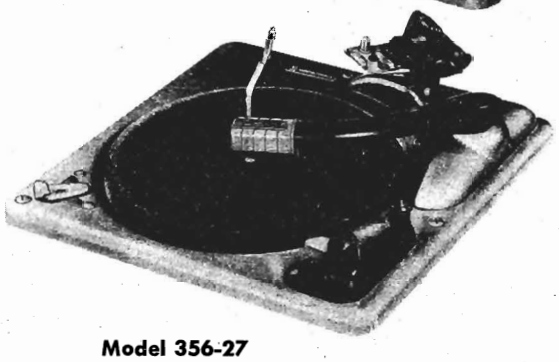

Model 356-27

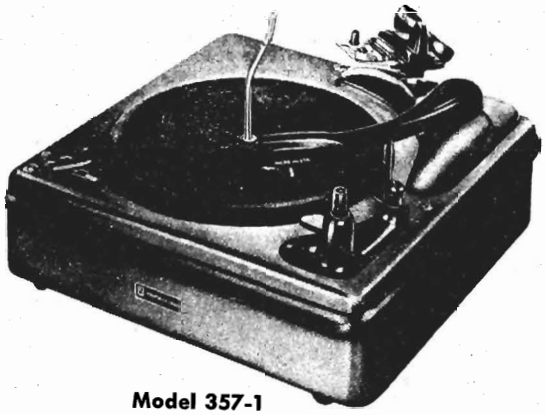

Model 357-1

DESCRIPTION

The Webster-Chicago Model 356-1 basic mechanism is a three speed, single post, spring cushioned spindle, automatic record changer. Simple in design and operation it provides automatic playing of up to a 1" stack of 7", 10" or 12" records at speeds of 33⅓, 45 or 78 rpm.

Model 356 returns the pickup arm to the rest position after playing the last 10" or 12" record, although the motor continues to revolve until the Speed Selector Lever is moved to the nearest "OFF" position. Two "OFF" positions are available for ease of operation. The idler wheel is also pulled away from the motor shaft when the Speed Control Lever is in an "OFF" position, eliminating the possibility of a flat spot developing on the rubber wheel.

The last 7" record of a stack continues to play until the Speed Selector Lever is moved to one of the "OFF" positions and the Pickup Arm moved from the record to the Rest Position.

Automatic playing of 7" records is made possible by a simple, ingenious 7" record shelf which is easily placed on the Record Selector Post and by a movable 7" Pickup Arm Rest which can be swung into or out of position.

Model 356 also features the exclusive Webster-Chicago Velocity-Trip Mechanism. The pickup arm is not actuated by "lead-in" springs and there is a minimum of lateral pressure. The arm travels freely in either direction. This lack of lateral pressure or inertia adds immeasurably to the life of records and is considered to be as important as extra-light vertical pressure. The free-floating arm permits "home recordings" or "inside out" records up to 12" size to be played manually. Model 356 will change warped or rough-edged records, at the same time assuring maximum protection to the finest discs.

Model 356-27 is the same as Model 356-1 except for the pickup arm. The special pickup arm on this model is provided with two interchangeable plug-in Heads in which the General Electric Variable Reluctance Cartridges can be mounted. The Brown head and the brass weight are for use with the RPX-040 General Electric Cartridge. The Red head is for use with the RPX-041 General Electric Cartridge. Use the RPX-041 for the 33⅓ rpm and 45 rpm records.

Model 357 is a Model 356 mounted on an attractive metal base.

These service instructions apply to all three models.

PICKUP CARTRIDGE

The special pickup cartridge of Model 356-1 and Model 357 has a replaceable Tandem-Tip Needle. The lever on the cartridge is moved to "Std" or "Micro", as indicated on the pickup arm, to lower the proper point into playing position. All 78 rpm and some 33⅓ rpm records including "Books for the Blind", require the "Standard" point. The 33⅓ rpm Microgroove and 45 rpm records require the "Micro" point.

The special cartridge has been designed to play 78 rpm as well as 45 rpm and 33⅓ rpm records at very light needle pressures.

Model 356-27 uses the General Electric cartridges as previously explained in the Description.

©John F. Rider

Compliments of www.nucow.com

MODELS 356-1, 356-27, 357-1

OPERATION

MOTOR

Connect the motor cord to a source of 105-120 volt 60-cycle current only. If it is desired to operate the changer on 50-cycle current, a special motor shaft sleeve must be used in order to drive the turntable at the required speed.

Do not under any circumstances connect the motor to a source of direct current (DC) or alternating current of any other frequencies. The motor switch is part of the Speed Control Lever. The power is off when the lever is in an "OFF" position.

FOR AUTOMATIC RECORD CHANGE

1. Move the Tandem Tip Needle Selector to "Std" or "Micro" or plug-in the correct Head as explained in the description of the pickup cartridge above.
2. Turn the Record Selector Post to "10" or "12" for the ten- or twelve-inch records. The Record Selector Post is pivoted and turns in a counterclockwise direction to the 10" posittion as indicated by the arrows. Do not use the Ballast Weight (see Illustration, Page 1) as a handle to turn the post. Turn by grasping the head of Record Selector Post with the thumb and forefingers. For 7" records, turn the Record Selector Post to "10". Move the pickup arm toward the center of the record until it touches the spindle. Move the 7" pickup arm rest into position and return the pickup arm to the 7" rest position. Place the 7" record shelf on the record selector post, as illustrated, with the control knob of the record shelf turned to "45" or 33" as required.
3. Turn the Manual-Automatic Switch (sleeve of Reject button) to AUTOMATIC.
4. With the Record Ballast Weight turned back, place up to a 1" stack of records on the spindle so that the bottom record rests on the step of the spindle and the shelf of the Record Selector Post or 7" Record Shelf.
5. Turn the Record Ballast Weight forward to rest on the top record or the 7" adapter.
6. Move the Speed Selector Lever to "33⅓", "45" or "78", as required by the record being played. This also turns the power on.
7. Press the Reject buttom to start the changer.

   To reject any record while playing in the AUTOMATIC position, press the Reject button.

   NOTE: After the last record has been played, the Pickup Arm should not be touched until it has come to rest on the "Rest" button or has dropped to a normal playing position on the record.
8. After the last record has been played, the entire stack may be removed from the turntable at one time. The simplest procedure is as follows:
   a. Turn the Record Ballast Weight back out of position.
   b. Place the fingers of both hands under opposite edges of the bottom record.
   c. Do not apply pressure to the top record. (Keep your thumbs free.)
   d. Lift the stack of records straight up, following the contours of the spindle. This permits the stack of records to follow the curve of the spindle without binding and greatly facilitates the removal of the stack.

FOR "MANUAL" RECORD CHANGE

1. Turn the Record Selector Post to the "12" position. (This is not essential but permits more clearance in loading and unloading records.)
2. Turn the Selector Switch (sleeve of Reject Button) to MANUAL.
3. Place a record on the turntable. It may facilitate this operation if 10" and 12" records are placed over the spindle at an angle, with one edge of the records held below the level of the Record Selector Post Shelf. Records may be removed in the same manner.
4. Move the Speed Selector Lever to the proper position as required by the record being played.
5. Move the Tandem-Tip Selector to "Std" or "Micro" as explained in the description of the pickup cartridge.
6. Place the needle gently on the edge of the record. Do not lift the pickup arm too high as this will cause it to catch in the Automatic Stop Lock position.
7. To stop the mechanism at any time, turn the Speed Selector Lever to an "OFF" position.

©John F. Rider

Compliments of www.nucow.com

MODELS 356-1, 356-27, 357-1

SERVICE INFORMATION AND ADJUSTMENTS

All units are accurately adjusted, lubricated and tested at the factory. However service repairs and adjustments sometimes become necessary. This bulletin should be studied carefully before making any adjustments or replacing parts.

Service parts are available from your Webster-Chicago distributor. All parts must be ordered by piece part number and also record changer model and production number, stamped on the under side of the main plate.

The functions and most probable misadjustments of the main assemblies are as follows (reference numbers refer to the exploded view on pages 12 and 14):

THE AUTOMATIC TRIP FAILS TO FUNCTION

The Main Cam Assembly (38) and Actuating Gear (36) are the heart of the record changer. The Main Cam Assembly drives the mechanisms associated with the action of the Pickup Arm (5) and the Record Selector assemblies. It, in turn, is driven by the gear train (29, 30, 31) and the Turntable which is rim driven by the phonograph motor.

The Main Cam Assembly and Actuating Gear is put in motion or "tripped" by means of the "automatic" trip or by the manually operated "reject" trip. When the movement of the Pickup Arm toward the spindle is greater than 1/8" in 1/2 revolution of the Turntable, the Automatic Trip Arm (33) trips the Velocity Trip and Roller Assembly (37). This releases the Actuating Pawl on the Main Cam Assembly (38), allowing it to engage the Main Cam Actuating Gear (36) and driving it through the change cycle. The pressure from the Automatic Trip Arm required to actuate the trip mechanism is negligible.

The Automatic Trip Arm (33) follows the movement of the Pickup Arm through a weighted friction clutch (32). This clutch must be kept free of oil and grease. Should it become necessary, clean the clutch parts with carbon tetrachloride. This clutch should operate the trip mechanism without placing undue drag on the movement of the pickup arm.

Also check for:

1. Velocity Trip and Roller Assembly binding.
2. Slight burr on end of the actuating pawl or on the underside of the Velocity Trip hook.
3. Actuating Pawl stuck (part of Main Cam Assembly (38) engaged by the hook end of the Velocity Trip and Roller Assembly (37).
4. Automatic Trip Arm (33) bent and not hitting the Velocity Trip and Roller Assembly (37).
5. Automatic Trip Arm (33) fails to touch the Velocity Trip and Roller Assembly.
6. Velocity Trip and Roller Assembly (37) rubbing on the underside of the Main Cam Actuating Gear (36).
7. No velocity lead-in groove or eccentric groove in the center of record.
8. Foreign matter in record groove.
9. Badly worn record.
10. Badly bent or worn needle.

IF THE "REJECT" TRIP FAILS TO FUNCTION

When the "On" button is pressed, the hair spring of the "reject" trip lever arm (65), actuates the Velocity Trip and Arm Assembly, putting the change mechanism in cycle.

Check for:

1. "Reject" trip hair spring of Lever (65) bent or broken.
2. Velocity Trip and Roller Assembly (37) binding.
3. Actuating Pawl (part of Main Cam Assembly 38) stuck.

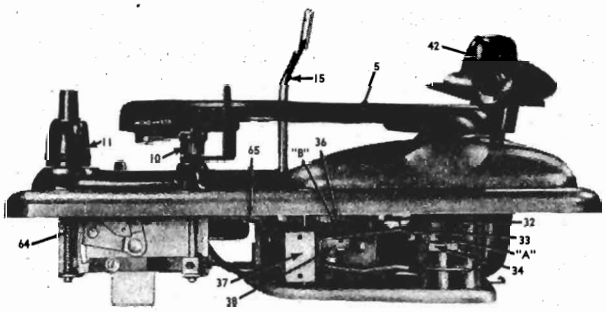

Fig. 1

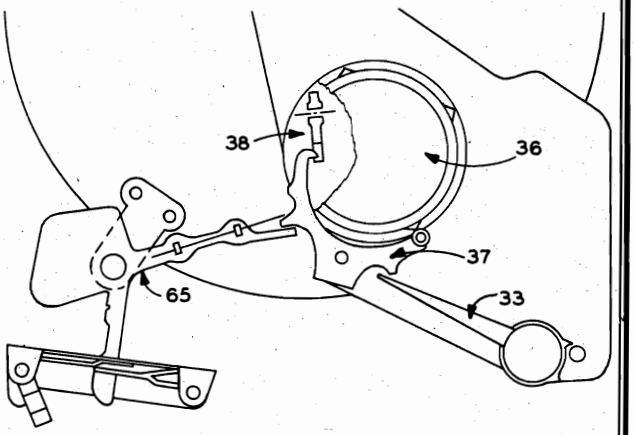

Fig. 2

©John F. Rider

Compliments of www.nucow.com

MODELS 356-1, 356-27, 357-1

IF THE MECHANISM CONTINUES TO CYCLE

At the completion of the change cycle, the Actuating Pawl is disengaged from the Main Cam Assembly Actuating Gear (36) by the hook end of the Velocity Trip and Roller Assembly (37) which has been returned to its normal position by the reset points on the Main Cam Drive Gear (Fig. 3). This hook should be adjusted for about 1/64" clearance from the bottom of the Main Cam Drive Gear (36), Fig. 1. Greater clearance may permit the pawl to bounce past the hook and re-engage, causing the mechanism to continue to cycle.

If the clearance between the lip on the Velocity Trip Lever and the edge of the Main Cam is too small, it will prevent the hook end of the Velocity Trip Lever from engaging the trigger. Adjust the clearance between the lip (D, Figs. 3 and 5) on the Velocity Trip Lever of the Main Cam to be within 1/64" when the roller is contacting the point of one of the protrusions on the Actuating Gear.

Also check for:

1. Velocity Trip and Roller Assembly (37) rubbing on Main Cam Actuating Gear (36).
2. Manual Trip Lever (65) binding.
3. "Disengage Roller" broken on Velocity Trip and Roller Assembly (37).

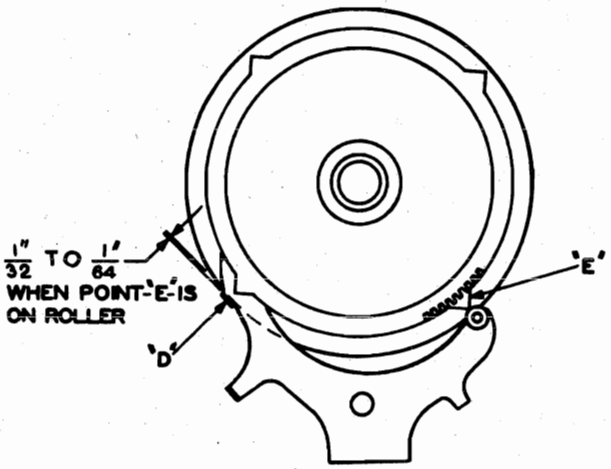

ADJUST IF NECESSARY BY BENDING AT POINT "D".

Fig. 3

PICKUP ARM LIFT TOO HIGH OR TOO LOW

The vertical movement of the pickup arm is controlled by the angle of the Pickup Arm Raising Lever (40), Fig. 4. The needle should approach the top record of a full stack of 10" records on the turntable with approximately 1/16" clearance.

To adjust:

1. Put a full stack of 10" records ON THE TURNTABLE.
2. Press the "On" button and rotate the Turntable clockwise until the needle clears the top record of the stack by about 1/16".
3. Be sure the notch in the Pickup Arm raising disc (34) engages the pickup arm raising lever (40).
4. If the needle does not clear the top record or if it raises too high, adjust by bending the pickup arm raising lever at the point indicated in Fig. 4 Y.

CAUTION: All adjusting bends should be made slowly, using slight but firm, easy pressure.

Be sure the set screws (A of Fig. 1) of the pickup arm raising disc are not loose and are properly positioned in the alignment holes as explained in the paragraph on Needle Setdown Indexing.

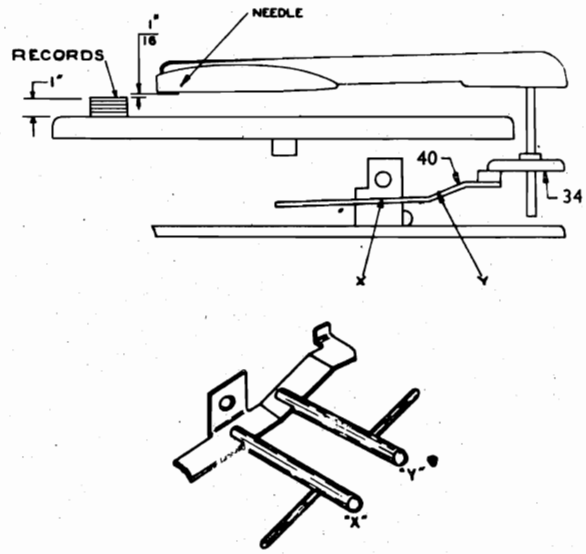

Fig. 4

NEEDLE SET DOWN INDEXING INCORRECT

The horizontal movement of the pickup arm (5) is controlled by the eccentric excursion of the Pickup Arm Raising Lever (40) moving the Pickup Arm Raising Disc (34) when actuated by the Main Cam Assembly (38). The eccentric screw (part of 6), accessible through the top of the pickup arm (5), should take care of any normal position adjustment. Turn this screw clockwise to index the needle in toward the spindle and counter-clockwise to index the needle out away from the spindle.

Should further adjustment be necessary, proceed as follows:

1. Set the eccentric screw, just mentioned, to a middle position.
2. Set the Record Selector Post (42) to the 10" position.
3. Operate the mechanism by revolving the Turntable manually until the needle drops to within 1/8" of a 10" record on the turntable.
4. Be sure the notch in the Pickup Arm Raising Disc (34) engages the Pickup Arm Raising Lever (40).

©John F. Rider

Compliments of www.nucow.com

MODELS 356-1, 356-27, 357-1

5. With a No. 8 Bristol wrench in each of the set screws of the Pickup Arm Raising Disc (35) as indicated in A, Fig. 1, alternately loosen one screw and tighten the other until the needle rests above the record lead-in groove at the desired point.
6. Complete the change cycle of the mechanism and position the Pickup Arm on the rest button (10). If necessary, bend the tongue of the Pickup Arm Raising Disc closer to or away from the Base Plate Post until the Pickup Arm is correctly seated on the rest button when the tongue is touching the Base Plate Post.

NOTE: All adjusting bends should be slight but firm, easy bends.

CHANGE CYCLE STARTS BEFORE END OF RECORD

If the trip assembly chatters while the changer is running, or if the changer cycles before the entire record is played, there is probably insufficient clearance between the hook end of the Velocity Trip and Roller Assembly (37) and the Actuating Gear (36). This clearance should be adjusted to be within 1/32" to 1/64" by bending the lever at point "C" shown in Fig. 5.

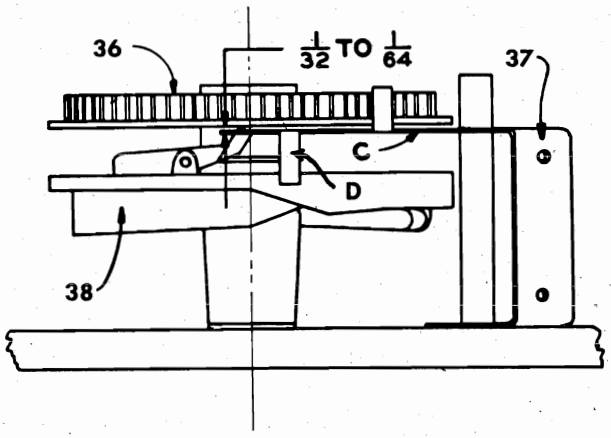

Fig. 5

MORE THAN ONE RECORD IS DROPPED DURING A CHANGE CYCLE

The floating latch at the top of the Record Spindle is so spaced that only one record at a time can slide between the heel of the latch and the step of the spindle. The hole in the latch is elongated so that the latch can slip into the spindle recess when records are being removed.

If more than one record is dropped at a time, it will be found to be due to:

1. Foreign matter in spindle recess causing the latch to stick.
2. Exceptionally thin records.

RECORD DROPS ON PICKUP ARM

As the change cycle is started, the first motion of the inclined outer bottom surface of the Main Cam (38) causes the Record Selector Post (42) to move toward the Spindle about 3/32 inch. This position is maintained until the Pickup Arm has made its full outward lateral excursion at which time the Record Selector Post again moves toward the spindle, causing the bottom record to drop into playing position.

If the Record Selector Post (42) has been bent back, away from the Record Spindle, it is possible for a standard record to rest on the spindle step with its edge just over the edge of the Record Selector Post shelf. Then as the change cycle is started, the record is pushed off the spindle by the initial movement of the Record Selector Post, so that it drops on the Pickup Arm.

To correct this condition, the Rocker Arm Assembly must be adjusted so that the Record Selector Post is brought nearer to the spindle. This adjustment is made in the following manner:

1. With the mechanism at rest, remove the Turntable and replace the Record Spindle. Set the Record Selector Post to the position for playing 12-inch records and place a 12-inch record on the Record Spindle.
2. Insert a short screwdriver through the motorboard opening into the screw slot as shown at "A" in Fig. 6. Clockwise rotation of the screw will increase the distance between the Record Spindle and the Record Selector Post; counterclockwise rotation will decrease it.

It is recommended that the distance between the edge of the record and the step of the Record Selector Post be held to just over 1/32 of an inch so that records with rough or sharply beveled edges will not catch on the outer edge of the Record Selector Post.

CAUTION: Be certain that a standard size record is used in making this adjustment. A standard 10" record measures 9 7/8" ± 1/32" diameter. A standard 12" record measures 11 7/8" ± 1/32" diameter.

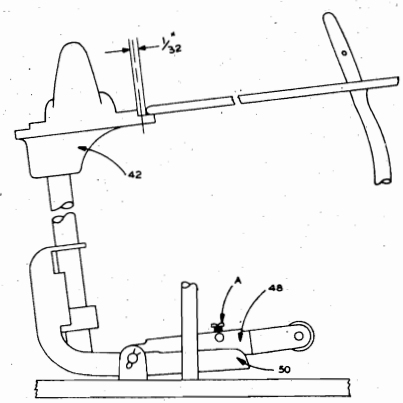

Fig. 6

©John F. Rider

Compliments of www.nucow.com

MODELS 356-1, 356-27, 357-1

PUSH OFF POST ANGLE INCORRECT

The Record Selector Post should be adjusted so that the curve of the shelf matches the curve of the record. See Fig. 7.

To adjust this angle:

1. Turn the Record Selector Post to the "10" position.
2. Place a ten-inch record on the Spindle in the normal position for automatic playing.
3. With a No. 8 Bristol wrench in each of the set screws (point A, Fig. 7), alternately loosen one and tighten the other until the Record Selector post angle is correct. Be sure that both set screws are tight at the completion of this adjustment.

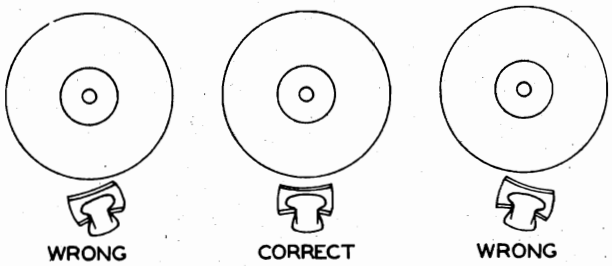

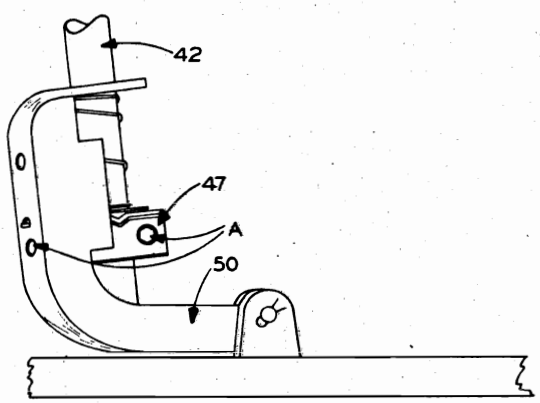

Fig. 7

ERRATIC INDEXING

Indexing in the 10" or the 12" position is controlled through the presence or absence of pressure from the Compression Spring (47A) on the Pickup Arm Raising Lever (40). The compression on this spring is changed as the Record Selector Post (42) is changed to the 10" or 12" position. Improper adjustment of the spring tension will result in erratic indexing. In the 12" position, the spring should be just free. In the 10" position, the compression of the spring holds the stud of the Pickup Arm Raising Lever (40) against the outside edge of the groove, forcing the stud to travel the inside edge or the outside edge of the groove in the bottom of the Main Cam (38).

To adjust:

Bend the slotted arm (part of 40) for proper tension and smooth clearance of the spring guide arm (47).

LAST RECORD DOES NOT PLAY

The weight of the records on the Spindle keeps the Automatic Shut Off Lock Lever (44) from dropping and engaging the Pickup Arm Raising Disc (38), thus permitting the mechanism to continue to cycle.

The Push Off Post (50) moves forward slightly at the beginning of each change cycle. The bracket "B" on this post is then underneath the elevated hook "A" on the Automatic Shut Off Lock Lever (44). This forward movement takes place before the last record drops so the change cycle should continue. However the dropping of the last record releases the Automatic Shut Off Lock Lever, permitting it to drop and shut off the mechanism when the change cycle starts after the last record.

If the last record does not play:

1. Bend the elevated hook "A", Fig. 8 forward so that it will overlap the Push Off Post bracket "H" about 1/32" with a record on the spindle.

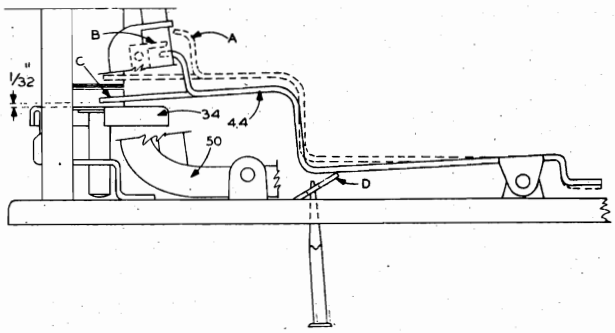

Fig. 8

LAST RECORD CONTINUES TO PLAY (10" or 12" Records)

1. Check the record spindle to be sure that it moves up and down freely.
2. With no records on the spindle, check the Automatic Shut Off Lock Lever (44). The lower hook end of this arm "C" should catch the Pickup Arm Raising Disc (34) at the beginning of the cycle to prevent travel of the Pickup Arm, causing it to drop on the OFF button. With no records on the Spindle and with the mechanism at rest, this hook should clear the top of the Pickup Arm Raising Disc by 1/32". Adjust if necessary, by inserting a screw driver in the hole in the bottom base plate and bending lip "D". Never attempt to move the Pickup Arm Raising Disc up or down.
3. The elevated hook "A" on the Automatic Shut Off Lock Lever will sometimes lock with the bracket "B" on the Record Selector Post (50) if the drop of the record is delayed. More clearance can be obtained by bending the elevated hook "A" away from the bracket.

©John F. Rider

Compliments of www.nucow.com

GLIDE-IN ON 12" RECORDS

The term "glide-in" is used to describe the action of the pickup arm and needle when the needle does not sit down smoothly in the first groove of the record, despite accurate indexing adjustments, but seems to glide over the first two or three grooves before seating itself properly. If glide-in occurs:

1. Check tension of compression spring (47A). The spring should be free in 12" position at the moment the needle sets down on the record.
2. Remove any cause of friction in index lever (47) by bending the "eye" of 40.
3. On Model 357, pulling the metal base up snug to the main plate may put too much tension on the compression spring (47A). Be certain spring (47A) is very free.
4. The pickup cord may be dressed too tight or in such a manner that it interferes with the free movement of the pickup arm. Make certain there is sufficient play in the pickup cord.

SLIDE-IN OR NEEDLE JUMPS GROOVES

Slide-in describes the condition where the needle will touch the first groove of the record properly but will jump the grooves forward or back as though the needle pressure was too light.

To correct slide-in, check for:

1. Incorrect needle tip. The standard tip will be especially likely to jump grooves of a microgroove record. Be certain the "micro" tip is used for either the 33⅓ or 45 rpm microgroove records.
2. Chipped or damaged needle.
3. Tight pickup cord.

CHANGE CYCLE STARTS WHEN NEEDLE TOUCHES RECORD (10" or 7" Records)

1. The velocity trip arm (33) may be too close to lip "B" of velocity trip (37) at the instant of contact of the needle with the record. There should be at least 1/64" clearance between the velocity trip arm and the velocity trip. Carefully bend lip "B" in to provide proper clearance. However, do not in any way bend the velocity trip at any other point. Improper bending may cause binding and constant tripping of the mechanism.

TO ADJUST SPEED SELECTOR LEVER POSITION

1. Loosen set screw of coupling (62).
2. Move Idler assembly (67) to 45 rpm position.
3. With the Speed Selector Lever opening over "45", tighten the set screw.

INCORRECT TURNTABLE SPEED

The three speed mechanism and the motor are one assembly. The speed selector idlers (24, 26 and 27) are mounted on a moveable metal plate (67) in such a way that moving the Speed Selector Lever (70) moves the correct idler into position between the motor shaft and the Turntable drive idler (91). The tongue of the detent spring (73) fits into indentations in the edge of the metal plate to index the speed selector idlers and holds them firmly in the desired position.

"Off" indentations between each speed position hold the idlers away from the motor shaft and the Turntable idler when the Speed Selector Lever is in an "off" position.

If the Turntable speed is incorrect, check for:

1. Turntable Idler (91) cocked at an angle. Bend the wheel and shaft to straighten wheel.
   CAUTION: Do not bend idler (91) toward the speed selector idlers (24, 26, 27). Bend only sideways or away from the small idlers.
2. The idler mounting assembly (part of motor assembly 54) must not bind. There should be at least 1/64" play at point "A". Bend the raised metal stop if more clearance is needed.
3. The entire motor assembly (54 plus 67, etc.) should be free floating. There should be slight play of the Speed Control Lever (70) between the "78" and "33" positions and the stops at the end of the speed selector dial. If there is any binding, loosen set screw of coupling (62) and retighten with the tongue of the detent spring (73) in the proper position.

ERRATIC SPEED (WOW)

Remove any dirt or excess flocking from the inside rim of the turntable. Check the rubber idler wheel for a flat spot or "out of round".

If the rubber part of either Drive wheel becomes slick and shiny — Replace.

STALLS DURING CHANGE CYCLE

See Above.

REPLACEMENT OF PARTS

TO REPLACE THE PICKUP ARM

1. Unhook the pickup arm hinge clip (6) and raise the arm to a vertical position.
2. Remove the two mounting screws. Remove the pickup arm.
3. Attach the new arm.

The weight of the arms is uniform so the needle pressure adjustments should be left alone.

REPLACE PICKUP ARM BRACKET AND SHAFT ASSEMBLY

1. Loosen Bristol screws in Pickup Arm Raising Disc (34).
2. Remove Disc washer (43), Automatic Trip Arm (33) and Clutch (32) by sliding them off the bottom of the Pickup Arm Shaft (7) and pull shaft out of changer from above.

To replace, reverse the procedure and adjust the Pickup Arm Raising Disc for proper indexing as explained

TO REPLACE THE CARTRIDGE

1. Remove the two mounting screws, one on each side of the cartridge, and carefully remove pickup cord tips from cartridge pins.
2. Remove the old cartridge and replace with the new one.

Be certain the cartridge is parallel with the side of the pickup arm.

TO REPLACE THE NEEDLE

1. Loosen the needle set screw, using a small screw driver.
2. Remove the needle.
3. Insert the new needle with the flat side of the needle toward the set screw. Be sure the needle shank is all the way in to the bottom of the needle hole.
4. Tighten the set screw. The needle point should be parallel to the sides of the needle slot and evenly spaced between the walls of the slot.

REPLACE RECORD POST AND ROCKER ARM ASSEMBLY

1. Remove the Pickup Arm Assembly.
2. Remove the four nuts under the main plate which hold the Crescent Assembly.

©John F. Rider

Compliments of www.nucow.com

3. Unhook the Rocker Arm Return Spring.
4. Remove the Rocker Arm Pivot Pin.
5. Lift out the Record Selector Post, Rocker Arm and Crescent Assembly as a unit.
6. In replacing the Rocker Arm Assembly, note paragraph "Replacing the Sub-Plate Assembly".

TO REPLACE THE MOTOR

It is not necessary to replace the entire Three Speed mechanism when replacing the motor. However, it is necessary to remove the entire assembly from the main plate and then remove the motor from the assembly.

1. Remove the entire assembly by removing mounting screws (58) and retaining clip (23).
2. Remove the Turntable Drive Wheel (91), the detent spring (73) and tension spring (74).
3. Remove the Three Speed mechanism plate assembly (67). Do not remove the small idler wheels (24, 26, 27) from the plate.
4. Reassemble new motor to the Three Speed Mechanism plate and the entire assembly to the main plate.
5. It may be necessary to adjust the play of the Three Speed Mechanism mounting plate "C" (part of the motor 54), so there is proper play between the sliding stop and the metal stop at point "A" The mounting plate should be free, approximately 1/64" clearance between the sliding stop and point "A". The Speed Selector Lever (70) should be in the "78" position when making this adjustment. See paragraph 2 of "Incorrect Turntable Speed"

LUBRICATION

Webster-Chicago Record Changers leave the factory completely oiled and lubricated. Under normal conditions this should be sufficient for approximately one year or 1,000 hours of operation. When operated under extreme conditions of dust or heat, this operation should be performed more frequently as required.

Do not permit any oil or grease to get on the rubber Idler Drive Wheels or the Motor Sleeve, on Turntable Drive Rim or on the Automatic Trip Arm clutch. Any oil or grease on these points should be removed using Carbon Tetrachloride.

The recommended lubricants and points of lubrication are as follows:

A — No. 10 OIL (Apply With Small Oil Can or Medicine Dropper)

1. Motor Bearings.
2. Pickup Arm Shaft. Drop one drop each to bottom bearing point, bracket hole through Main Base Plate.
3. Ball Bearing Assembly.
4. Idler Wheel Felt.

B — A Non Fluid Lubricant (Apply With Small Brush)

1. Idler Wheel Link.
2. Turntable Shaft Stud.
3. Pickup Arm Hinge Pins.
4. Knife edge of Pickup Arm Raising Lever.
5. Main Cam Bearing. (It is necessary to remove the sub-plate assembly to lubricate this bearing.)
6. Teeth of Main Cam Actuating Gear.
7. Track of Main Cam Gear.
8. Teeth of Large and Small idler gears.
9. Raising lever Bracket bearing surfaces.

AVOID EXCESSIVE LUBRICATION

Cut Away View

©John F. Rider

Compliments of www.nucow.com

MODELS 356-1,
356-27, 357-1

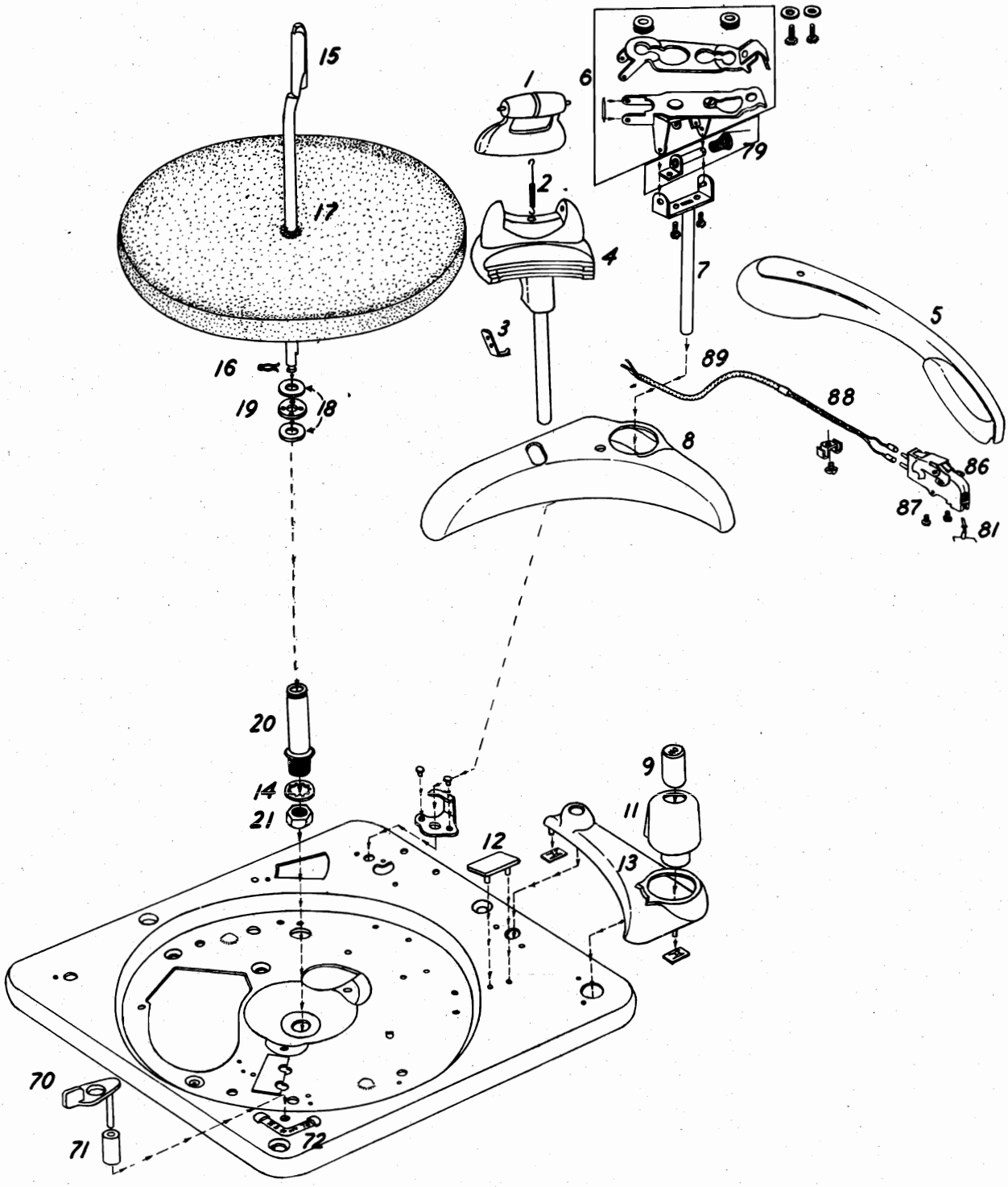

Exploded View above Main Plate

©John F. Rider

Compliments of www.nucow.com

MODELS 356-1,
356-27, 357-1

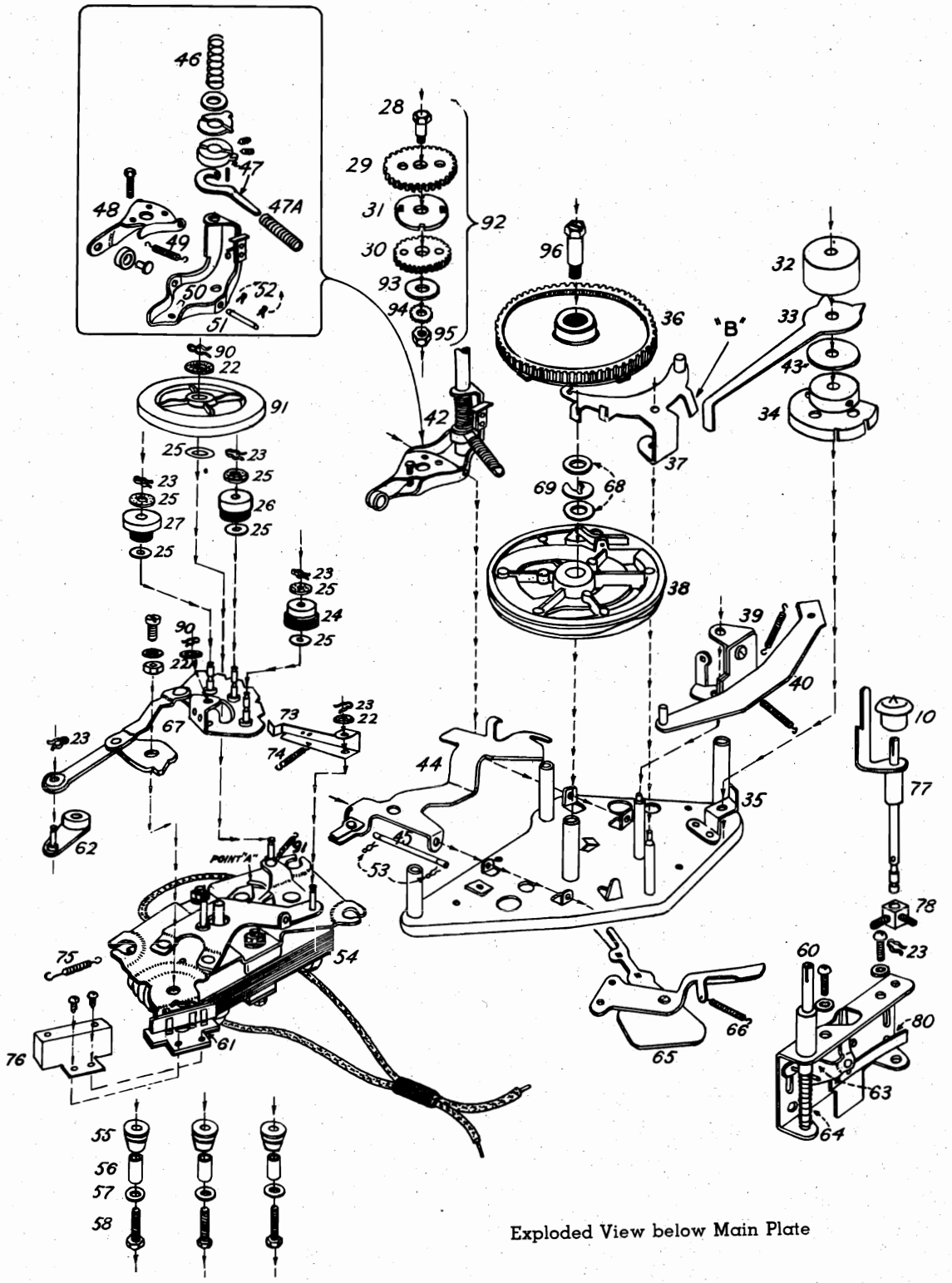

Exploded View below Main Plate

PARTS LIST

Illustration No.	Part No.	Description
1	49X074	Record Stabilizer
2	46P126	Tension Spring
3	45P464	Spring Retainer

©John F. Rider

Compliments of www.nucow.com

MODELS 356-1, 356-27, 357-1

PARTS LIST

Illustration No.	Part No.	Description
4	49X029	Selector Post
5	49X124-1C	Pickup Arm
6	21X283	Pickup Arm Mounting Hinge
7	11X385	Pickup Shaft Assembly
8	45P350	Crescent Plate
9	49P111	Reject Button
10	49P125	Pickup Arm Rest
11	11X139	Control Knob and Set Screw
12	24P022	Needle Pad
13	49P027	Escutcheon
14	25P333	Lock Washer
15	11X133	Spindle
17	11X289	Turntable
18	25P269	Washer Bearing Race
19	11X058	Bearing Race Assembly
20	41P414	Turntable Bearing
21	26P687	Bearing Nut
70	42X205	Speed Selector
71	41P669	Bushing
72	78P454	Speed Indicator
87	26P474	Screw — Cartridge Mounting
16	50P204	Spindle Clip
22	25P407	Felt Washer
22A	25P030	Felt Washer
23	50P034	Clip
24	11X456	Drive Wheel — 33⅓
25	25P046	Fibre Disc
26	11X458	Drive Wheel — 45
27	11X460	Drive Wheel — 78
28	41P333	Shoulder Screw
29	47P024	Large Fibre Gear
30	47P023	Small Fibre Gear
31	45P342	Idler Gear Coupler
32	41P576	Weight
33	45P568	Auto Trip Arm
34	11X227	Tone Arm Raising Disc
36	11X032	Trip Reset Gear
37	11X320	Velocity Trip
38	11X033	Cam and Trigger Assembly
39	46P139	Tension Spring — Index Plate
40	11X046	Raising Arm Lever
41	46P022	Tension Spring
43	23P009	Friction Disc
44	11X079	No-Record Lever
45	41P443	Pin
46	46P012	Compression Spring
47	11X049	Selector Lever and Collar
47A	46P011	Compression Spring
48	11X141	Rocker and Roller Assembly
49	46P017	Compresion Spring
50	11X142	Rocker Arm Lever
51	41P421	Retaining Pin
52	50P125	Clip
53	50P125	Clip
54	17X467	Motor and Top Bridge Assembly
55	25P363	Rubber Shock Motor Mount
56	41P592	Motor Mount Sleeve
57	25P367	Motor Mount Washer
58	26P110	Motor Mount Bolt
59	11X470	Automatic Manual Control Assembly
60	41P444	Switch Shaft
61	32P054	Switch
62	17X466	Hub and Lever Assembly
63	45P361	Switch Lever
64	46P123	Compression Spring
65	11X158	Trip Lever and Wire
66	46P117	Tension Spring — Trip Lever
67	17X464	Index Plate and Cam Assembly
68	25P343	Washer
69	25P342	"C" Washer
73	45P817	Index Lock Lever
74	46P187	Tension Spring — Lock Lever
75	46P139	Tension Spring — Index Plate
76	45P819	Switch Cover
77	11X472	7" Adapter Rest
78	41P704	Positioning Cam
79	11X386	Pickup Counter Balance
80	45P872	Leaf Spring
88	20X1264-4	Pickup Cord — Internal
89	20P811-60	Pickup Cord — External
90	50P125	Clip
91	11X366	Idler Wheel
92	11X132	Idler Gear Assembly
93	25P284	Coupling Washer
94	25P222	Lock Washer
95	26P046	Nut
96	26P748	Shoulder Screw
97	46P134	Tension Spring — Idler Link

©John F. Rider

Compliments of www.nucow.com

Compliments of www.nucow.com

MODELS S14023, S14026

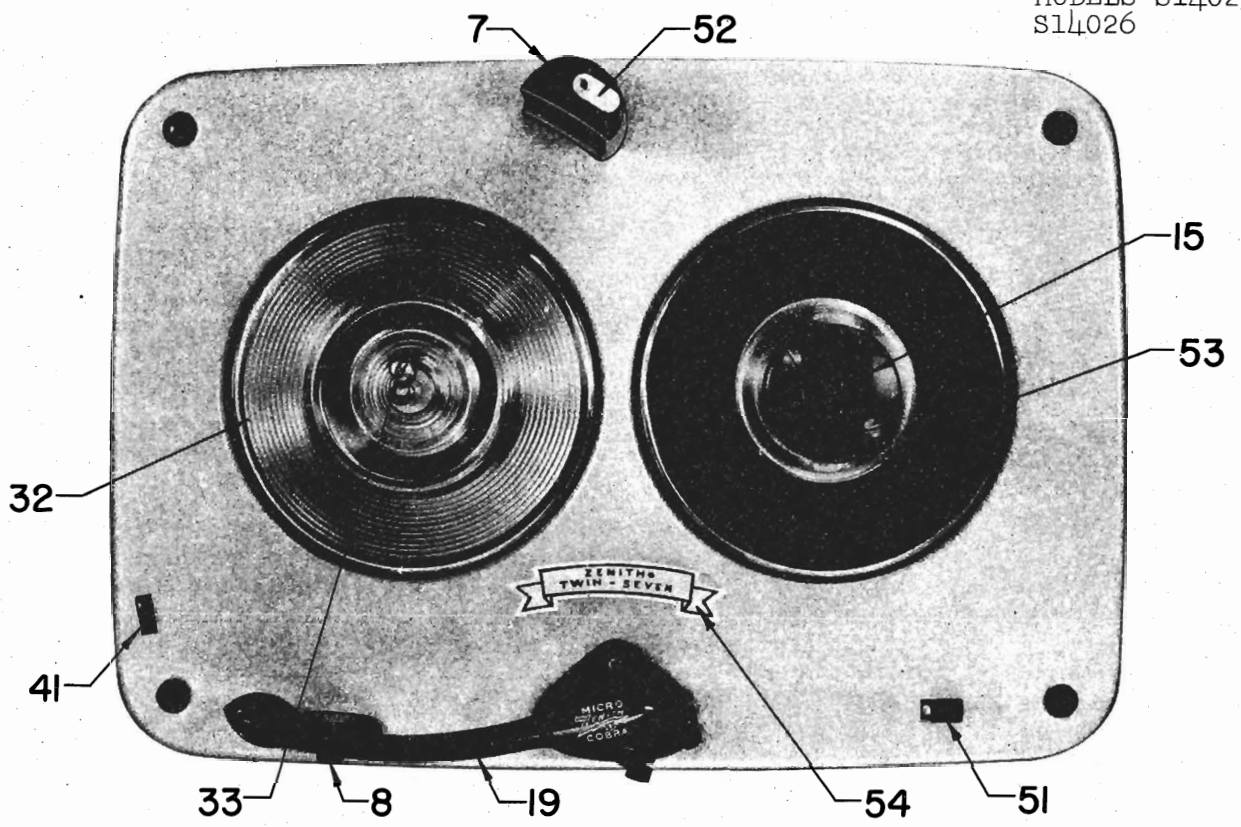

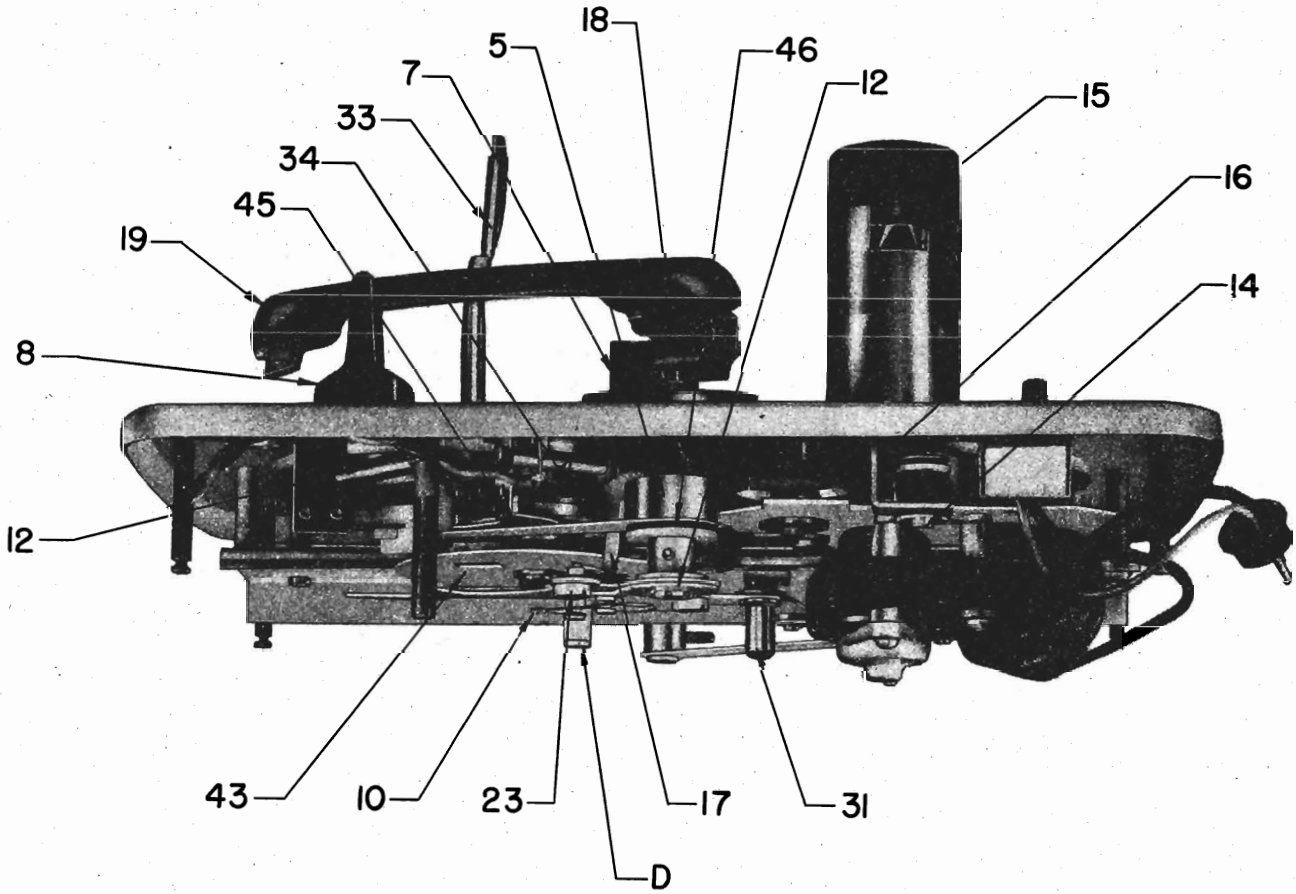

Fig. 2 Side View

© John F. Rider

Compliments of www.nucow.com

MODELS S14023, S14026

GENERAL

The Zenith Model S14023 and S14026 Record Changers are designed to automatically play 7" 33 1/3 RPM and 7" 45 RPM Micro Groove records. With a few minor exceptions, these two changers are alike both electrically and mechanically. The only actual difference between the two changers is in the AC power cable to the record changer and the connecting cable from the Cobra Tone Arm to the phono pre-amp. These changers will play either a stack of twelve 7" 33 1/3 RPM records or twelve 7" 45 RPM records. However, these records cannot be played simultaneously and neither can they be intermixed. These changers employ two turntables, one rotating at 45 RPM and the other rotating at 33 1/3 RPM. There is but a single tone arm and this is to be used for either turntable. To move it from the 33 1/3 RPM playing position to the 45 RPM turntable playing position, all that is required is to grasp it and lift it high enough to clear the 33 1/3 RPM spindle then swing it to the right until it snaps into the 45 RPM playing position. Thus indexed, it is ready for 45 RPM operation. These changers do not turn off after the last record has been played. They will repeat the final record until the record player is turned off manually. Connect this changer only to an outlet supplying 117 volts 60 cycle. Power consumption is 25 watts.

SHIPPING BOLTS

Before placing the record changer in operation, the machine must be floated freely on the mounting springs. During shipping the mechanism is secured by means of four shipping bolts. To float the changer, use a wide blade screw driver and turn the four mounting bolts clockwise until the heads are flush with the mounting plate which allows the changer to float on its shock mounts. (See Fig. 1)

LEVELLING THE RECORD CHANGER

It is essential to have the changer absolutely level. Use a torpedo or similar type level on the record changer base plate, use adequate shims to level the record changer pan or combination cabinet to achieve perfect level.

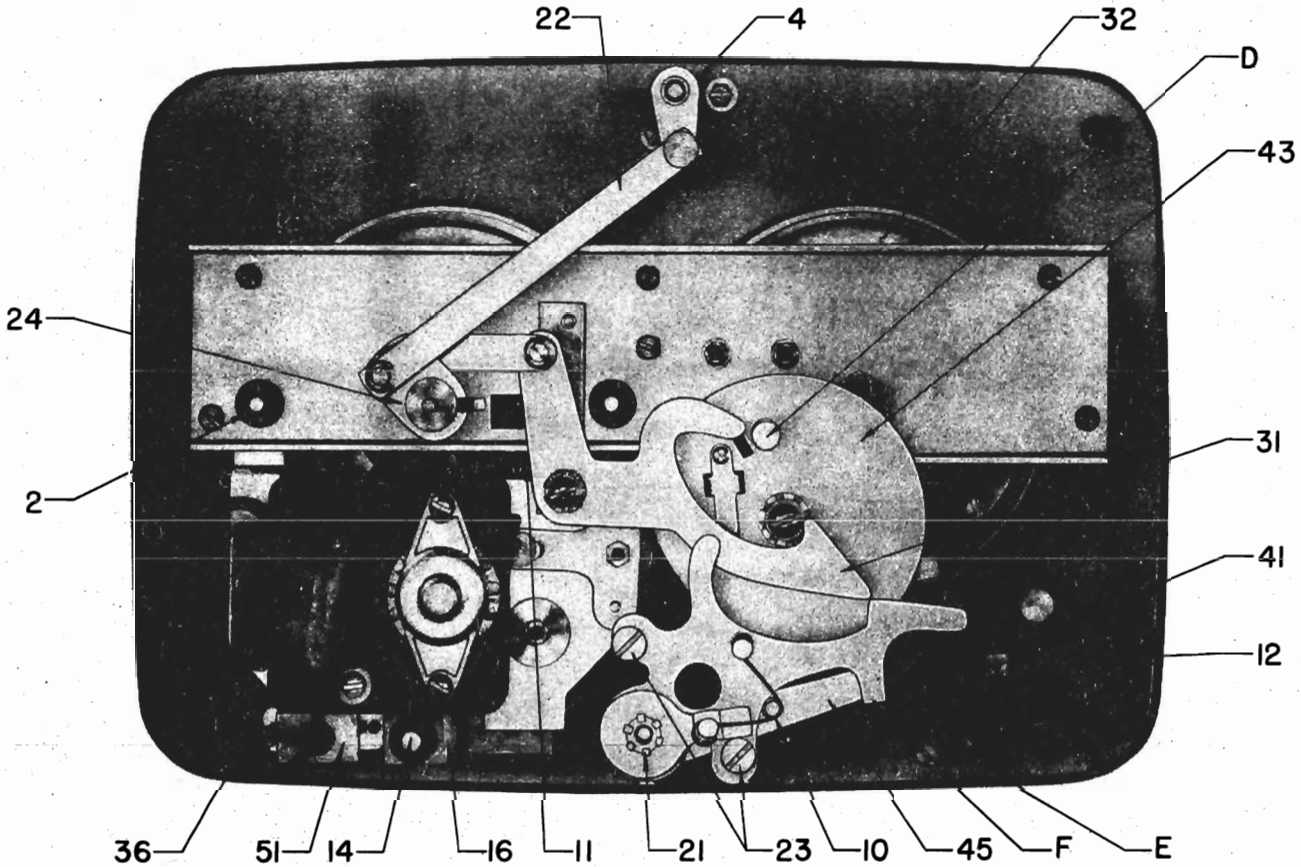

Fig. 3 Bottom View

CYCLING

The Motor shaft drives the turntable through the media of idler wheels. The motor shaft drives the fast idler wheel (48) which in turn drives the slow speed idler wheel (37) which then simultaneously rim-drives the 45 RPM and 33 1/3 RPM turntables. (See Fig. 9) The changer can be cycled either manually or automatically. The record changer cycles automatically in the following manner. As the tone arm moves towards the center of the record, the friction between the felt washer (46) and trip actuator stud assembly (45) created by the brass weight (5) carries the trip actuator and stud assembly (45) in towards trip lever (47) (See Fig. 2). When the nylon stud on (45) contacts surface (C) on trip lever (47), the entire trip lever is rotated (direction B) around axis (A). This swings trip actuator in (direction B) and allows pawl (44) to rise and engage the upper clutch plate assembly (35). (See Figs. 4 & 5) The upper clutch plate assembly (35) is continually rotating and this places the changer in cycle.

©John F. Rider

Compliments of www.nucow.com

When the clutch pawl (44) mechanically connects the upper clutch assembly to the lower clutch assembly, the entire clutch assembly rotates. As the lower clutch plate assembly (43) rotates, the nylon bushing (D) contacts throwout cam and lever assembly (21) thus moving the tone arm from the record finish position to a position over the tone arm captivator. (See Figs. 2 & 3) As the lower clutch assembly continues to rotate, the nylon bushing (D) contacts the inside surface of throwout cam and lever assembly thus returning the tone arm to record start position. Simultaneously the bushing (D) on the lower clutch assembly (43) contacts the ejector cam assembly (31) and a new record is dropped on the turntable. This actuates the 33 1/3 RPM ejector cam and at the same time actuates the ejector mechanism on the 45 RPM spindle. The ejector shaft and plate assembly (26) in the 45 RPM spindle rotates (See Fig. 8) automatically inserting record separators (29) between the bottom record and the record stack and then retracts the record supports (28) from beneath the last record, dropping this record. The record ejector shaft (26) turns again placing the record supports (28) out under the record stack and the record separators (29) retract, thus lowering the record stack on the record support plates. At the same time the eccentric shaped lower clutch assembly (43) actuates the tone arm lift lever and pin assembly (17) thus raising and lowering the tone arm in the proper sequence.

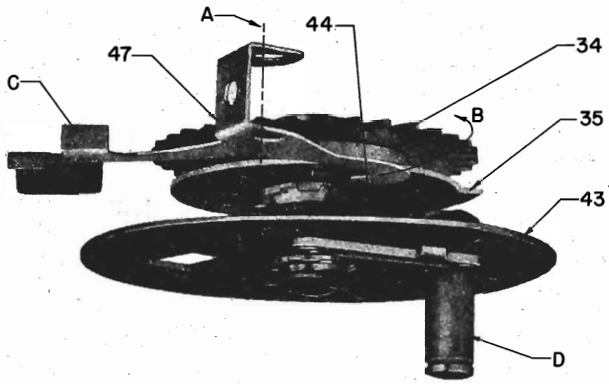

Fig. 4 Clutch Assembly with Pawl (44) Disengaged

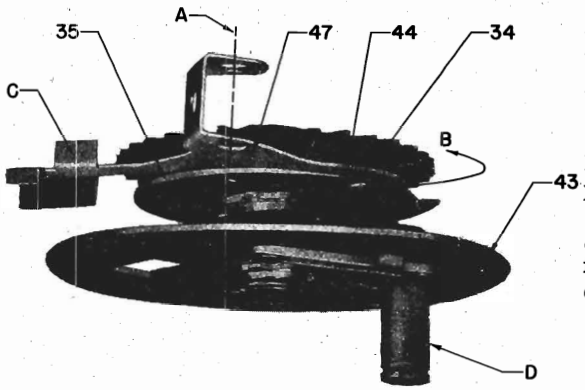

Fig. 5 Clutch Assembly with Pawl (44) Engaged

LUBRICATION

Additional lubrication should not be required for the life of the changer, but in cases of unusual use, or high operating temperature, the changer should be lubricated as follows

Lubricate the following places with #10 light machine oil:

1. 33 1/3 RPM ejector shaft (4) near base plate.
2. Rivet and shoulder stud on 33 1/3 ejector shaft (22).
3. Rivet and shoulder stud on 45 RPM ejector link (24).
4. 45 RPM ejector shaft spindle mounting plate (26).
5. Trip lever (47) in two places on its pivot shaft.
6. Reject lever (41) at the reject lever pivot.
7. Link lever (17) on the shaft pivot.

TONE ARM HEIGHT ADJUSTMENT

The tone arm height adjustment determines vertical rise of the tone arm. If the tone arm does not rise sufficiently it will not play a full stack of twelve records. (See Fig. 6) On the other hand, if the tone arm raises too high it may hit the records resting on the record shelf. Set the tone arm height adjustment screw (6) so that the needle clears twelve unwarped records on the turntable. The tone arm housing must not hit the under side of the records on the record shelf when the changer is cycled after adjustment.

TONE ARM SET-DOWN ADJUSTMENT

With the tone arm locked in the tone arm captivator, the gap between surface (E) on throwout cam and lever assembly (21) and aligning stud (F) should be adjusted so it is 1/4". (See Fig. 3) Adjusting stud (23) on the 33 1/3 RPM side should be in as far an outward position as possible during this operation. When the gap is 1/4", the slab head screws should be tightened on the tone arm shaft. Then the adjusting studs (23) can be rotated for final minor indexing of 33 1/3 and 45 RPM tone arm set-down positions.

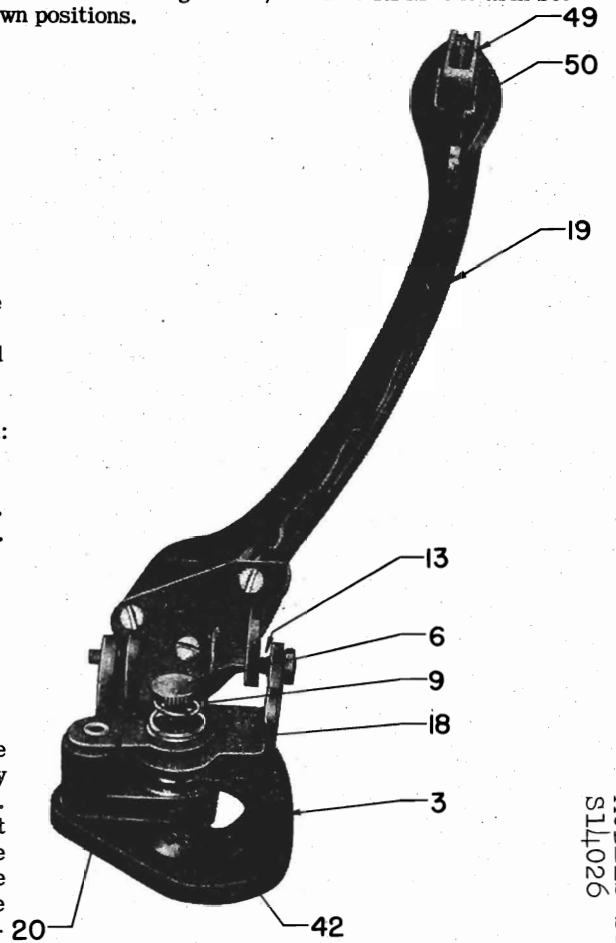

Fig. 6 Tone Arm & Hinge Assembly

© John F. Rider
Compliments of www.nucow.com

MODELS S14023, S14026

TONE ARM HINGES

The tone arm hinge adjustment must be made in the following manner. (See Fig. 6) Insert an Allen wrench into special set screw (13) and hold it in this position. With a hex head wrench loosen the hex nut around this set screw. Then tighten set screw to a point where the tone arm moves freely in the vertical position but still does not have any lateral motion. Hold the set screw (13) firmly in this position with the Allen wrench, and then tighten the hex head nut.

SLAB HEAD SCREWS

For maximum rigidity the tone arm shaft and 45 RPM spindle shaft are locked into position with slab head screws. The slab head set screw wrench is available as part number 68-8.

MANUAL TRIP ADJUSTMENT

The manual trip with the brass spring should be adjusted so there will be 1/8" clearance between the spring and surface (C) on trip lever (47). (See Fig. 4) There should also be .020 to .040 clearance between trip lever (47) and the top surface of the lower plate of the lower clutch assembly (43).

THEORY OF THE COBRA RADIONIC PICKUP

The operation of the Cobra pickup is considerably different from Crystal and Dynamic pickups. These pick-ups generate audio power, while the Cobra controls power generated by a radio frequency oscillator, detector and audio amplifier. The oscillator operates at a frequency of 2.5 Mc. Modulation is accomplished by changing the energy losses in tuned circuit. These losses may be represented by an equivalent resistance in series with the reactance of the coil.1 The ratio of the resistance to the reactance determines the efficiency of Q of the coil. The amplitude of the RF voltage developed across this coil by an oscillator will vary with changes in Q.

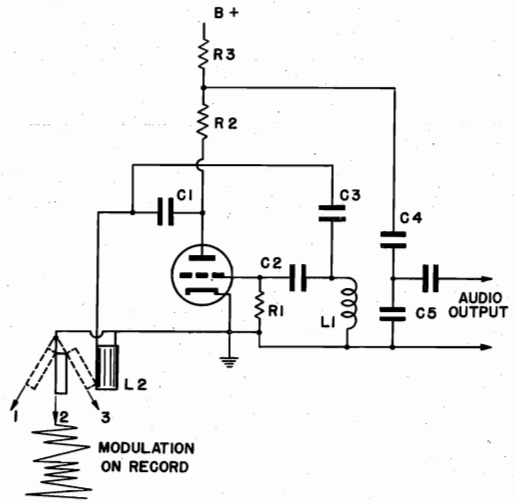

Fig. 7 Simplified Circuit of Oscillator

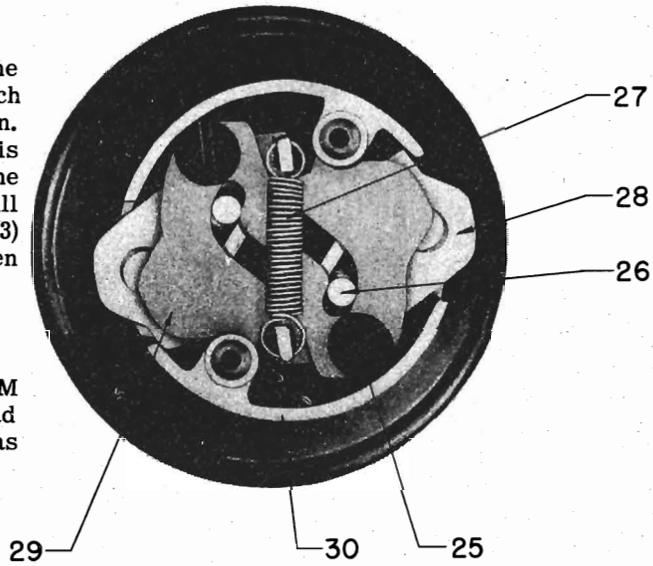

Fig. 8 45 RPM Spindle Assembly

The grid coil L1 and other components of the oscillator are mounted in the oscillator pre-amp chassis, while the plate coil L2 is in the needle cartridge with the vane and needle assembly. The coil is fixed and has 40 turns of No. 40 wire (approximate DC resistance 2 1/2 ohms). The stainless steel vane, which is in the field of the coil, is spot welded to the osmium-iridium tipped stylus. Any movement of the stylus will cause a corresponding movement of the vane. As the stylus and vane follow the modulations in the record, changes in the mutual inductance between the vane and coil occur (See Fig. 7) In position 2 the vane is at rest, and a constant RF voltage appears across the plate coil. As the vane is set in motion and reaches position 1, it is at its greatest outward swing from the coil, resulting in low mutual inductance, low relfected resistance, higher Q, and a higher RF voltage across the coil. In position 3 it is at its greatest inward swing; resulting in a high mutual inductance, high relfected resistance, lower Q and a lower RF voltage. It can be seen that the amplitude of the RF voltage which appears across the coil will vary with changes in Q, satisfying the condition for amplitude modulation. The position of the vane changes both the Q and L of the coil. Changes in L shift the frequency slightly, and a certain amount of frequency modulation is present, but since there is no frequency discrimination it remains undetected. Since the grid and plate coils are part of a single tuned circuit any variations of amplitude of the RF voltage brought about by the changes in Q across the plate coil will also appear across the grid coil L1, causing a shift in the average plate current through the plate load resistor across which the audio output voltage is developed. Plate bend detection takes place since only the positive half of the grid swing causes an increase in the average plate current. These changes in the average plate current appear as audio voltage across the plate load resistor.

©John F. Rider

Compliments of www.nucow.com

MODELS S14023, S14026

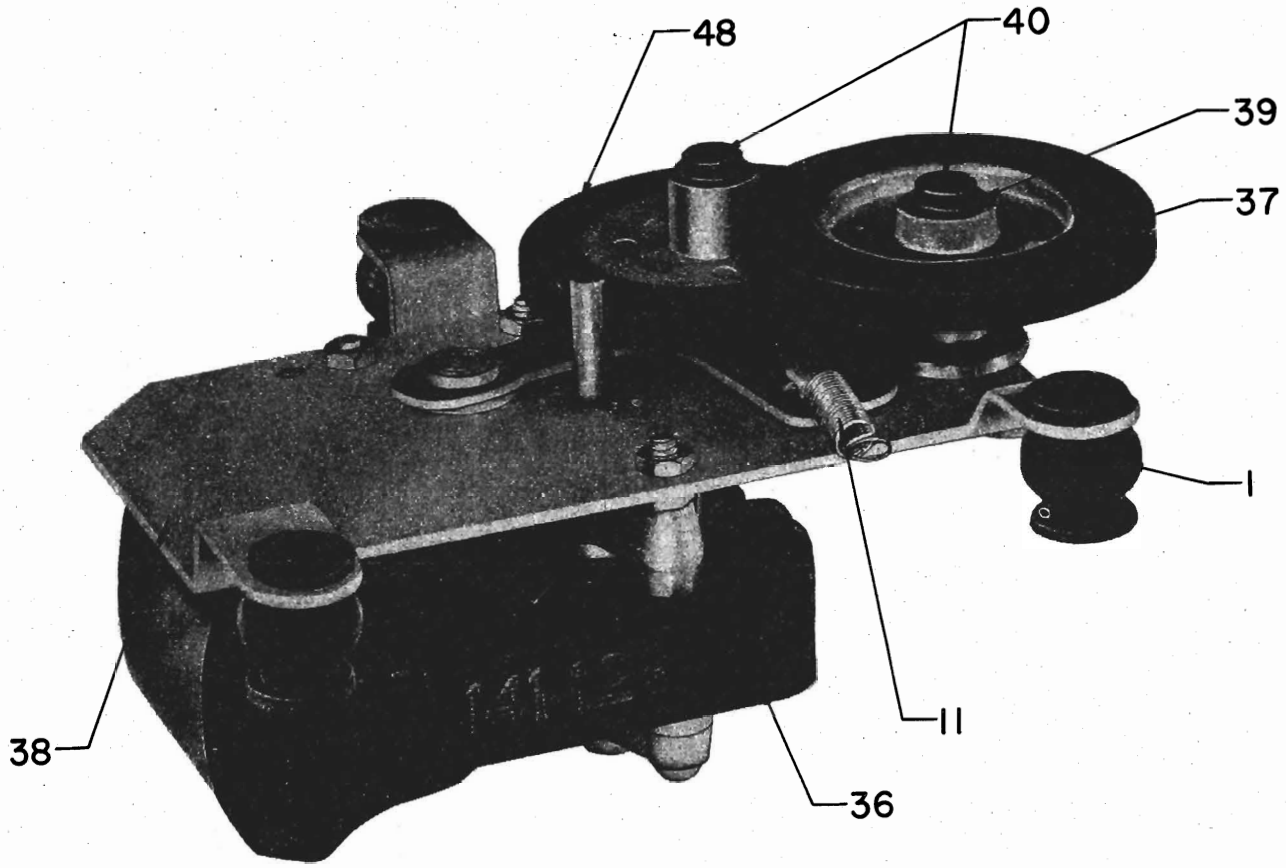

Fig. 9 Motor & Idler Wheel Assembly

The 2.5 Mc RF voltage and the audio voltage both appear at the plate (pin 6) of the oscillator triode. R2, C4 and C5 filter out the RF voltage allowing only the audio component to the grid (pin 4) of the amplifier triode where it is amplified, fed through a shielded lead to the audio amplifier of the receiver and reproduced by the loudspeaker.

NEEDLE DOES NOT TRACK ACROSS RECORD PROPERLY.

a. Clean foreign material from around needle.

b. Check needle to see if the tip is bent or broken. Replace needle.

c. Hinge bearing binds. Check lateral movement of tone arm. It must move freely without binding.

d. Excessive vibration while playing an LP record. Any vibration caused by (1) unsteady mounting, (2) floor vibration, or (3) passing of heavy vehicles may cause the pickup to glide across the record grooves.

MECHANISM STARTS SLOWLY AND MOTOR GETS HOT.

a. Check line voltage and frequency.

b. Check lubrication.

c. Motor windings damaged.

d. Room temperature abnormally low.

MOTOR FAILS TO RUN EVEN WHEN IT IS DISCONNECTED FROM CHANGER AND PROPER VOLTAGE AND FREQUENCY APPLIED DIRECTLY TO THE TWO INPUT LEADS OF THE WINDING.

a. Open windings.

b. Damaged or frozen bearings.

c. Lower Rear Support Bracket bent. Remove and straighten bracket--Re-center armature.

NEEDLE SETS DOWN PROPERLY ON RECORD BUT SLIDES OVER THE RECORD GROOVES.

a. Cabinet tilted.

b. Badly worn or broken needle cartridge.

©John F. Rider

Compliments of www.nucow.com

MODELS S14023,
S14026

TONE ARM FALLS OFF RECORD.

a. Check Tone Arm set-down adjustment.

b. Check Tone Arm Pivot Bracket.

c. Changer not level.

SQUEAKS OR NOISES DURING PLAYING OF RECORDS.

a. Friction between the records on the turntable and the spindle will occasionally cause squeaks. A thin coat of wax applied to the spindle will remedy this condition.

b. Check lubrication.

RECORD IS NOT HEARD ALTHOUGH CHANGER OPERATES.

a. See that the Band switch is on Phono.

b. Check receiver audio by listening to radio.

c. Check the phono oscillator tube.

d. Check Needle Cartridge.

e. Check Tone Arm Housing for broken leads.

RUMBLE AND MICROPHONICS DURING REPRODUCTION.

a. Changer not "floated" properly. Remove packing Strip. Loosen mounting bolts.

b. Motor leads pulled too tight preventing motor from "floating" freely.

c. Noisy phono oscillator tube.

d. Impression on Idler Wheel.

NEEDLE FAILS TO CLEAR MAXIMUM LOAD OF RECORDS ON THE TURNTABLE.

a. Check Tone Arm height adjustment.

TONE ARM SETS DOWN TOO FAR IN OR OUT ON RECORD.

a. Check Tone Arm set-down adjustment.

TONE ARM SET-DOWN VARIES.

a. Tone Arm pivots loose.

CHANGER CONTINUES TO CYCLE.

a. Check the trip switch adjustment.

b. Trip Pawl sticks.

CHANGER WILL NOT CYCLE UPON COMPLETION OF RECORD.

a. Be certain that the record has an eccentric center groove.

b. Check trip pawl.

RECORD BINDS ON OPPOSITE TURNTABLE.

a. If 33 1/3 RPM records rub on 45 RPM turntable, remove 33 1/3 turntable and raise it by placing washers between 33 1/3 RPM mounting and turntable. This will raise the level of the 33 1/3 records so they will clear the 45 RPM turntable.

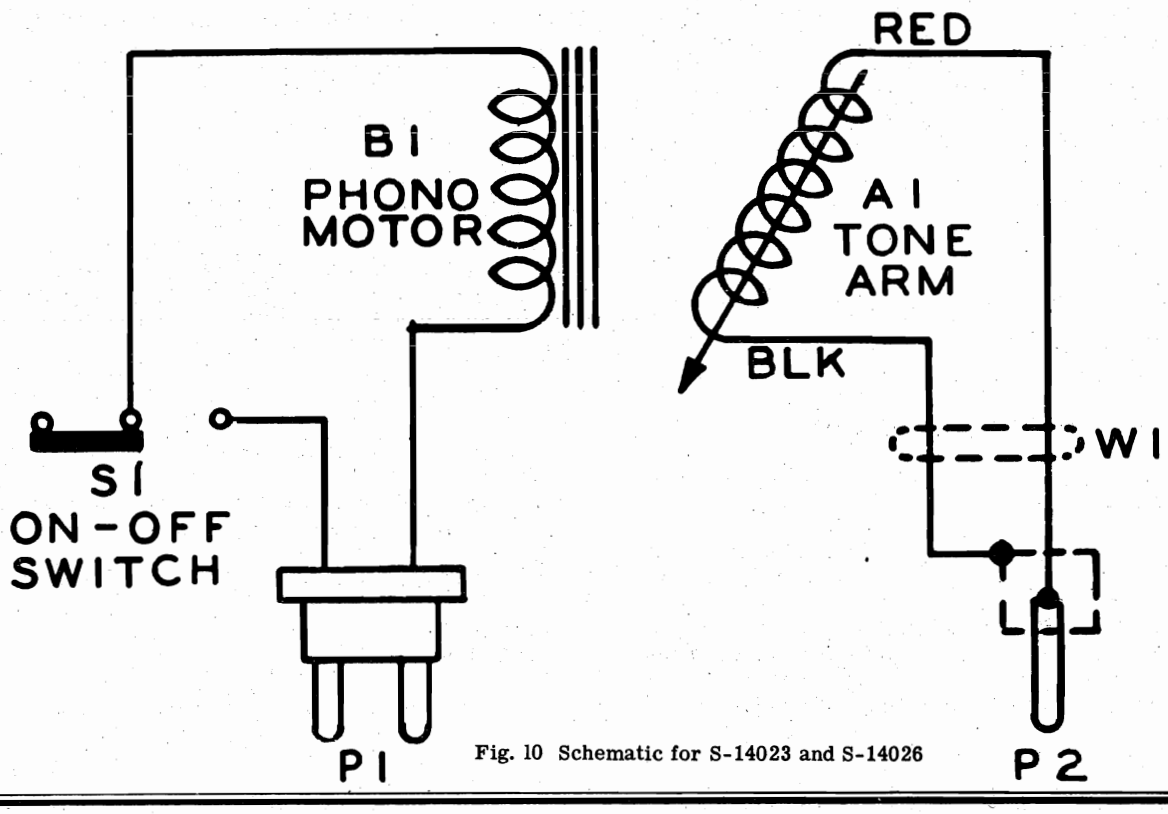

Fig. 10 Schematic for S-14023 and S-14026

©John F. Rider

Compliments of www.nucow.com

MODELS S14023, S14026

PARTS LIST

DIAG. NO.	PART NO.	DESCRIPTION
1	-125-77	Motor Mtg. Grommet (3 used)
2	-93-1018	Motor Mtg. Washer (Bakelite) (6 used)
3	-199-123	Tone Arm Sleeve
4	-199-122	Ejector Shaft Sleeve
5	-135-15	Weight
6	-112-778	Adj. Screw (Lift Pin)
7	-84-72	Record Support
8	-84-73	Tone Arm Rest
9	-80-750	Adj. Spring (Lift Pin)
10	-80-752	Tone Arm Positioning Spring
11	-80-753	Idler Wheel Tension Spring
12	-80-754	Reject Lever Return Spring
13	-73-121	Special Set Screw
14	-56-277	Grommet Retaining Pin
15	-15-93	Spindle Cap (Red)
16	-12-1661	Motor Mtg. Brkt.
17	-S-16080	Lift Lever & Pin Assem.
18	-S-16074	Swivel Brkt. & Shaft Assem.
19	-S-16073	Tone Arm Assem. (Complete less Cart.)
20	-S-16075	Lift Pin & Plate Assem.
21	-S-16076	Throw-Out Cam & Lever Assem.
22	-S-16071	Ejector Lever Link & Bushing Assy.
23	-97-357	Adjusting Stud
24	-S-16070	Ejector Lever & Bushing Assem.
25	-112-776	Shoulder Screw (2 used on S-16067)
26	-S-16066	Ejector Shaft & Plate Assem.
27	-80-749	Record Support Spring
28	-57-1555	Record Support (2 used on S-16067)
29	-83-1666	Record Separator
30	-76-557	Upper Spindle
31	-S-16069	Ejector Cam & Bushing Assem.
32	-S-16065	Turntable & Bearing Assem. (33 1/3 RPM)
33	-S-16061	Spindle & Dog Assem. (33 1/3 RPM)
34	-34-196	Clutch Gear
35	-S-16063	Clutch Plate Assem. (Upper)
36	-141-128	Motor 115V 60 Cycles
37	-61-142	Idler Wheel - Slow
38	-S-16058	Motor Mtg. Plate & Lever Assem.
39	-93-678	Fish Paper Washer
40	-76-561	Idler Wheel Shaft (2 Used)
41	-S.16057	Reject Lever & Spring Assem.
42	-93-1015	Thrust Washer (used on S-16074)
43	-S.16064	Clutch Plate Assem. (Lower)
44	-60-21	Pawl
45	-S-16079	Trip Actuator & Stud Assem.
46	-93-1017	Felt Washer (used on S-16079)
47	-117-180	Trip Lever
48	-61-143	Idler Wheel - Fast
49	-S-15222	Cobra Tone Arm Cartridge
50	-12-1658	Cartridge Retaining Brkt.
51	-85-471	Switch
52	-S-16072	Ejector Shaft & Plate Assem.
53	-S-16104	Turntable & Ring Assem. (45 RPM)
54	-102-626	Decal

PART. NO.	DESCRIPTION
12-1659	Tone Arm Brkt.
19-123	Record Changer Mtg. Clip
54-62	Hex Nut for 45 RPM Spindle Bushing
54-299	4-40x3/16 A.F. x 1/16" thk. Hex Nut Steel-Stat. Br.
54-300	Hex Nut for 33 1/3 RPM Spindle Sleeve
56-275	Lift Pin
58-75	Single Contact Plug
58-86	Two Prong Plug
69-108	#6-32x1/4 R.H.M.S. Brass-Plain (used on S-16069)
73-70	8-32x1/2" Allen Hd. Set Screw Cuppoint (used on S-16067)
73-112	8-32x1/2 Slab Hd. Set Screw Cuppoint (1 ea. used on S-16070, S-16071, 2 ea. on 76-560)
73-124	6-32x3/8" lg. Slab Hd. Set Screw Conept. (2 used on S-16076)
76-560	Spindle Shaft (45 RPM)
80-748	Reject Lever Spring
80-751	Lift Pin Return
93-143	Shakeproof Lock washer for 45 RPM Spindle Bushing
93-1011	Turntable Retaining Washer (used on S-16065)
93-1012	Shakeproof Lock washer for 33 1/3 Spindle Sleeve
93-1013	Thrust Washer (1 ea. used on S-10665 and S-16104)
93-1014	Lift Pin Washer
93-1035	Retaining Washer
94-682	45 RPM Spindle Bushing
94-684	33 1/3 RPM Spindle Sleeve
112-573	#2-32x1/4 R.H.S.T. Screw Shakeproof Cad.
112-777	#4-40x3/4 Oval Phill. H. M.S. Steel Stat. Br. (2 used on 15-93)
112-779	6-32x3/8 Phill. B. H. M. S. Stat. Br. (1 ea. used on 12-1661, 2 ea. used on 199-123)
113-21	Hex Head Screw for Mtg. Lower Clutch Assem.
114-253	6-20x3/8 Hex Hd. Sl. S. T. Screw (1 used on 84-73, 2 used on 84-72)
125-76	Rubber Grommet
148-119	Tone Arm Only
188-128	Retaining Ring (5 used)
188-129	Retaining Ring (3 used Motor Mtg.)
S-16060	Spindle Mtg. Plate Assem.
S-16067	Upper Spindle Assem. (45 RPM)
S-16091	Plug & Wire Assem.
S-16505	Cable Assembly (S-14026)

©John F. Rider

Compliments of www.nucow.com

MODELS S14028, S14029,
S14030, S14031, S14036

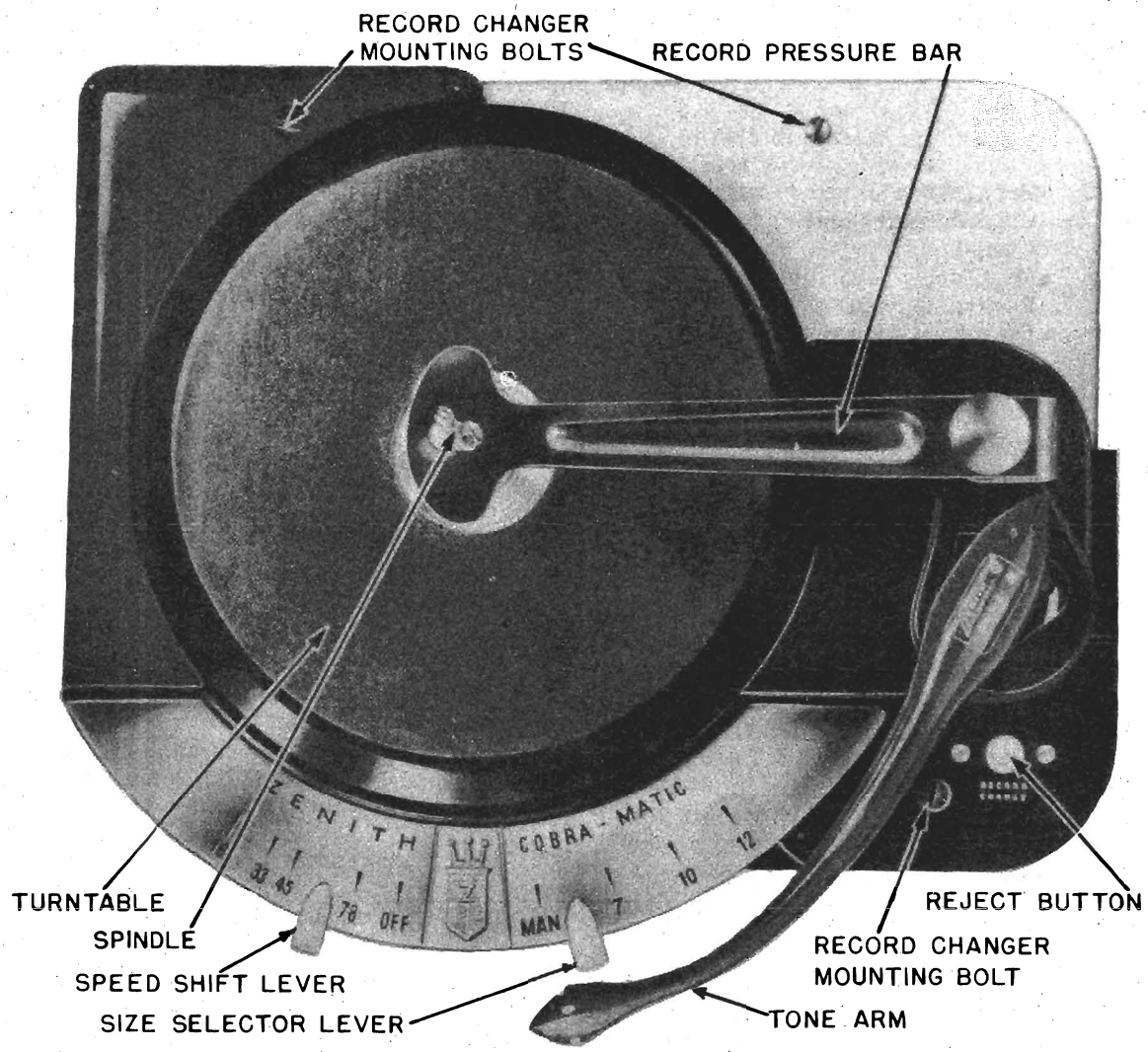

GENERAL DESCRIPTION

The Zenith Models S-14028, S-14029, S-14030, S-14031 and S-14036 Record Changers are designed to play standard 78, 45 and 33 1/3 RPM records of standard commercial dimensions. With few minor exceptions these five changers are alike electrically. The basic changer for S-14029, S-14030 and S-14031 is the S-14028. The addition of cable assemblies for tone arm and AC connections are the determining factors between S-14029, S-14030 and S-14031. The only difference in these cables is lead length and plugs. S-14036 Record Changer is basically identical to S-14028 except it uses a 50-60 cycle motor and is used primarily for the export market. The other difference is the tone arm and AC connecting cables.

Features of these changers include playing and automatically changing as many as ten 12" or ten 10" records. Ten inch and twelve inch records of the same type cannot be intermixed.

A full stack of 7" 33 1/3 RPM, or a full stack of 7" 45 RPM records (with adapter inserted in the records) can also be played on this changer. This changer does not shut off after the last record, however, all that is required to turn the changer off is to move the speed change lever (18) to OFF position.

Connect this changer only to an outlet supplying 117 volt 60 cycle A.C. unless specified otherwise. Power consumption is 25 watts.

©John F. Rider

Compliments of www.nucow.com

MODELS S14028, S14029, S14030, S14031, S14036

SHIPPING BOLTS

Before placing the changer in operation, the machine must be floated freely on the mounting springs. During shipment, the changer is secured to the changer base pan be means of three mounting bolts. To float the changer, take a wide-blade screw driver and turn down these bolts until they are flush with the record changer base plate. During shipment the motor and motor mounting plate (65) (66) is bolted to the changer base plate. Before the record changer can be operated, motor mounting screw (9) must be removed. As you can see, fastening the motor mounting plate (66) with motor mounting screw (9) to the record changer base plate prevents the motor drive shaft from contacting the rubber surface of drive wheel assembly (36) and prevents a possibility of damage to drive wheel assembly from rough handling during shipment.

LEVELING THE RECORD CHANGER

It is essential to have the record changer absolutely level. Use either a torpedo or similar type level on the record changer base plate. Use adequate shims to level the record changer pan or the combination cabinet to achieve perfect level.

LOADING THE RECORD CHANGER

1. Pull straight up on the record pressure arm knob (12) until the record pressure arm clears the spindle. Swing the record pressure arm to the right until pins in pressure arm shaft (14) drop into locating slot on record pressure arm housing (1).

2. Changer will automatically play ten 12" either standard or Long Play, ten 10" either standard or Long Play or ten 7" Long Play or Fine Groove records

NOTE: Standard, Fine Groove and Long Play records cannot be played in the same stack of records. Speed change lever (18) must be re-set for each type of recording.

3. Place records on spindle and lower them to offset shelf. Level records and replace record pressure arm (14) over spindle and lower this until it rests on the top of the record stack.

To play standard 78 RPM recordings:

1. Motor speed control lever (18) must be set to 78 position. This will set the record changer to proper speed position and cause the turntable to rotate.

2. Set-up lever (17) must be moved to the size records being played.

3. Place the changer in cycle by depressing reject switch knob (73). The changer will play the remaining records automatically. The changer will continue to play the last record until speed change lever (18) is moved to OFF position.

To play 33 1/3 RPM records:

1. Motor speed change lever (18) must be in 33 1/3 position.

2. Set-up lever (17) should then be moved to either 12", 10" or 7" position depending on the size record being played.

To play Fine Groove (45 RPM) records:

1. Speed change lever (18) should be moved to 45 position and set-up lever (17) should be in 7" position. It must be remembered that these records are manufactured with a 1 1/2" spindle hole so it is essential that a record adapter be inserted into each 45 RPM record to be played. This is necessary to reduce the spindle hole to conventional size.

REJECTING

To reject a record anytime, while the changer is operating, depress reject switch button (73) and release. This will automatically cause the record changer to go through cycle and begin playing the next record.

STOPPING

To turn off the record changer all that is required is to move the speed shift lever (18) to OFF position.

UNLOADING

Lift the record pressure arm (14) and swing it to the right until the pin on the shaft drops into the locating groove on record pressure arm shaft housing (1). Lift stack of records straight up on spindle.

MANUAL OPERATION

To play single records or home recordings, lift up the record pressure arm and turn it to the right. Place record on spindle and lower to the spindle shelf. Gently push record towards record pressure arm shaft and lower to turntable. Move speed change lever (18) to proper speed for type of record being played and move set-up lever (17) to manual position. Pick up tone arm and place the needle on the lead-in groove of the record.

©John F. Rider

Compliments of www.nucow.com

MODELS S14028, S14029, S14030, S14031, S14036

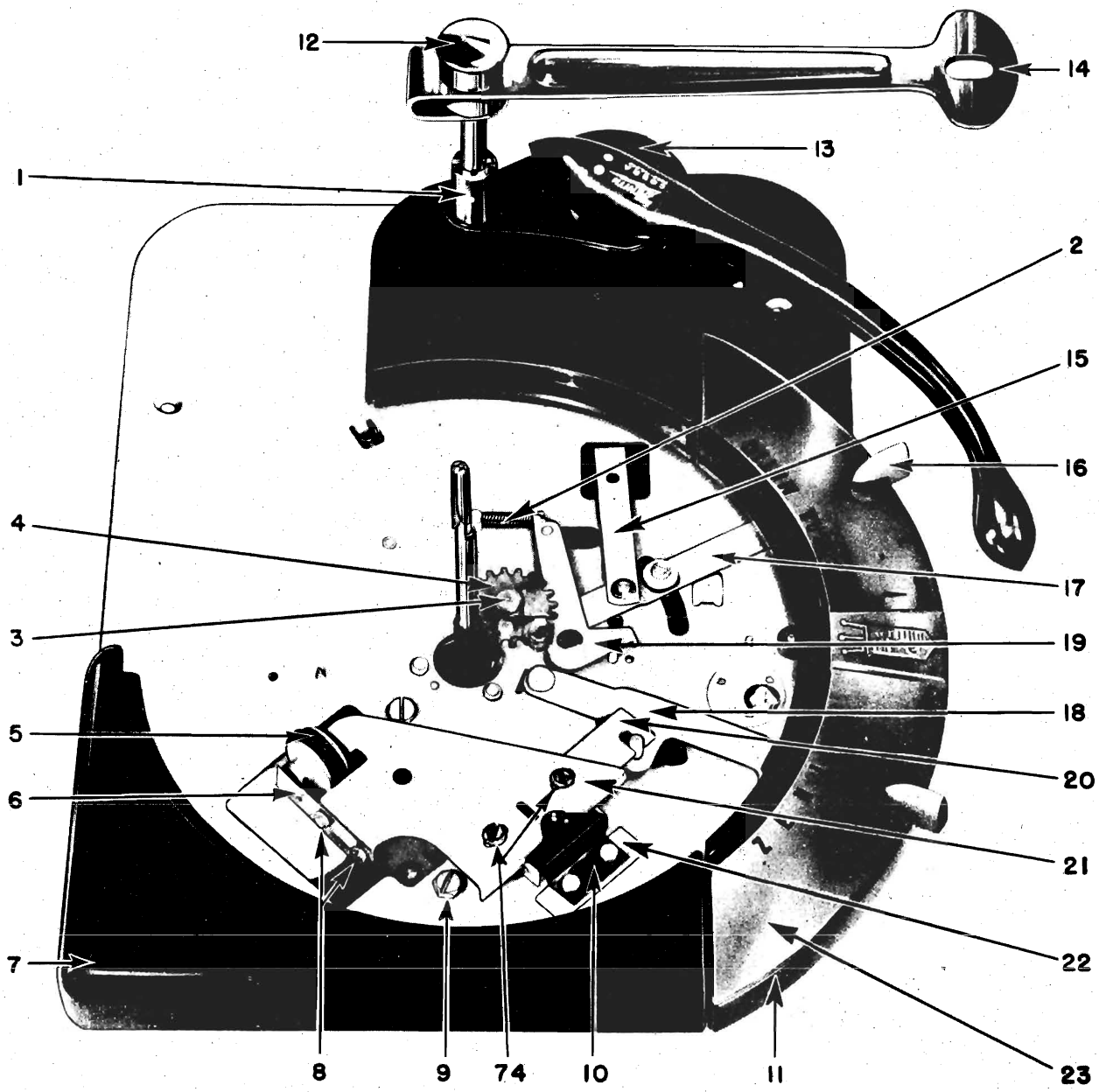

Record Changer Top View with Turntable Removed

CAUTION

When changing needles be certain that only a Red-Green cartridge is used, S-15780. This will accommodate 78, 45 and 33 1/3 RPM records.

DESCRIPTION OF CYCLING

The motor shaft contacts drive wheel assembly (36) and causes it to rotate by friction contact with its rubber surface. Drive wheel assembly (36) drives idler wheel (5). The underside of the turntable is in contact with idler wheel (5) and is driven in this manner. Speed of the turntable is controlled by changing the position of the idler wheel (5) on drive wheel (36). When idler wheel is moved to the center of drive wheel (36) it will rotate more slowly than when moved to the outer edge of this drive wheel (36). In this manner the turntable can be driven at any speed from 10 to 85 RPM. Minor adjustments for proper tonal pitch can be made by simply moving speed change lever (18) back and forth to compensate for turntable speed which may vary due to line voltage changes. When reject button (73) is depressed it energizes solenoid (61) which then attracts trip pawl assembly (62). The same thing occurs when the forward movement of the tone arm causes friction lever and weight assembly (47) to contact the copper bronze contact on trip switch assembly (63). When gear segment (58) is released, gear pawl spring (42) causes the gear segment (58) to engage the rotating pinion gear (25) under the turntable thus causing clutch assembly (41) to rotate.

©John F. Rider

Compliments of www.nucow.com

MODELS S14028, S14029, S14030, S14031, S14036

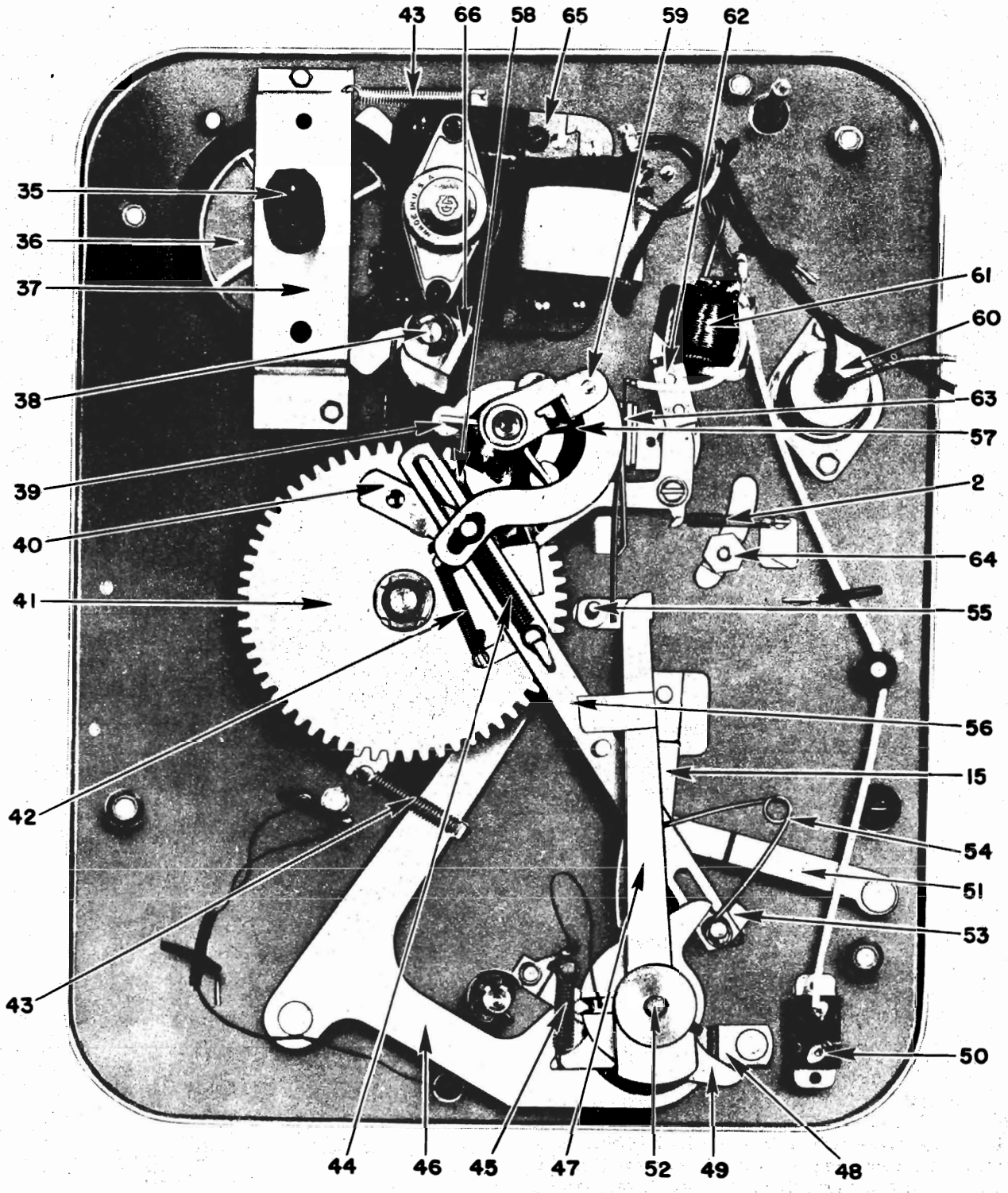

Record Changer Bottom View

As clutch assembly (41) rotates, tone arm lift lever (46) swings in such a manner that it contacts tone arm lift pin and raises the tone arm. Simultaneously, tone arm link and stud assembly (56) slides towards, and contacts one finger of tone arm lever assembly (49) forcing the tone arm towards the outer edge of the turntable and then on its return swing contacts the other finger of tone arm lever assembly (49) swinging the tone arm back over the records. The position to which it swings the tone arm over the records is determined by the position of record size discriminator (51). There are three steps on the record size discriminator (51) which determines set-down position for 7", 10" and 12" records. The tone arm lift lever

©John F. Rider

Compliments of www.nucow.com

MODELS S14028, S14029, S14030, S14031, S14036

(46) returns and releases brake lever assembly (48) which keeps the tone arm from moving erratically during cycle. Simultaneously, ejector lever and link assembly (59) rotates and this in turn causes spindle shaft (30) to rotate and ejector cam (29) to push the record off the spindle shelf. Operation of the tone arm set-down adjustment can be observed by raising the tone arm so the adjustment mechanism can be viewed.

VELOCITY TRIP

This changer is provided with what is commonly known as a velocity trip rather than a ratchet and positive trip mechanism. A velocity trip depends for the tripping action on the rate of forward motion of the pickup arm with respect to the turntable rotation. The changer will trip only when the tone arm advances more in one revolution of the turntable than the distance between normal grooves in a record. Only records having fast finishing grooves will operate the velocity trip. During the normal playing cycle, friction lever and weight assembly (47) continually moves forward toward the copper bronze contact on trip switch assembly (63).

On normal forward advance, the friction lever and weight assembly (47) is kept from contacting the copper bronze contact by a wiping action from oscillating lever stud assembly (55). The oscillation of oscillating lever and stud assembly is produced by eccentric motion of oscillating gear (4) which is driven by the pinion gear (25) on the lower portion of the turntable. Oscillating gear (4) is mounted off-center so it will describe an eccentric action as it is being driven by the turntable gear. The tone arm moves in towards the center of the record and the repeated action of oscillating lever (55) keeps friction lever and weight assembly (47) from coming in contact with the copper bronze strip on trip switch assembly (63) as the pickup arm moves slowly towards the spindle and lead-in grooves. During the first revolution of the turntable, in the eccentric cycling grooves, the pickup arm advances rapidly and friction lever and weight assembly (47) is moved forward fast enough so that oscillating lever (55) does not halt its progress, therefore, friction lever and weight assembly (47) contacts the copper bronze trip contact on trip switch assembly (63) grounding it and making a complete circuit. This actuates solenoid (61) causing the changer to cycle.

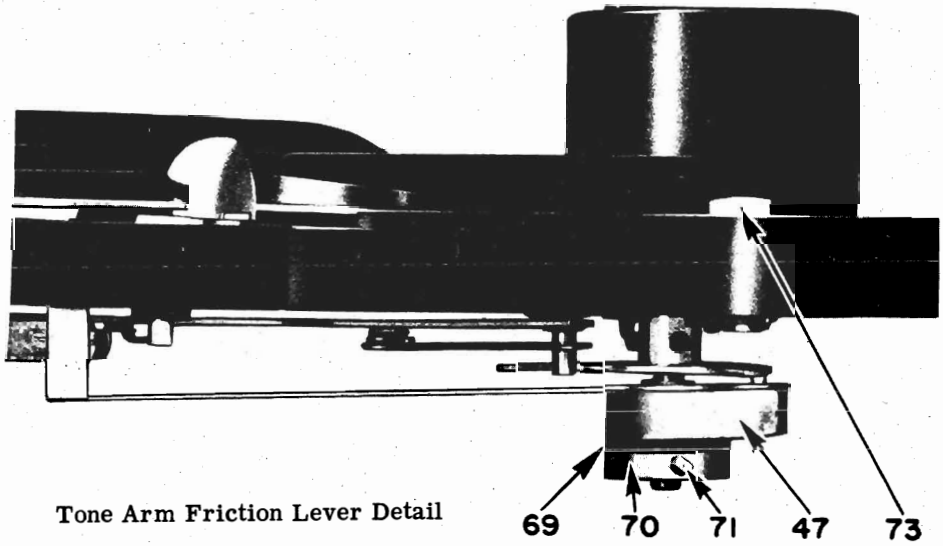

Tone Arm Friction Lever Detail

THEORY OF THE COBRA RADIONIC PICKUP

The operation of the Cobra pickup is considerably different from Crystal and Dynamic pickups. These pickups generate audio power, while the Cobra controls power generated by a radio frequency oscillator, detector and audio amplifier. The oscillator operates at a frequency of 2.5 Mc. Modulation is accomplished by changing the energy losses in a tuned circuit. These losses may be represented by an equivalent resistance in series with the reactance of the coil. The ratio of the resistance to the reactance determines the efficiency or Q of the coil. The amplitude of the RF voltage developed across this coil by an oscillator will vary with changes in Q.

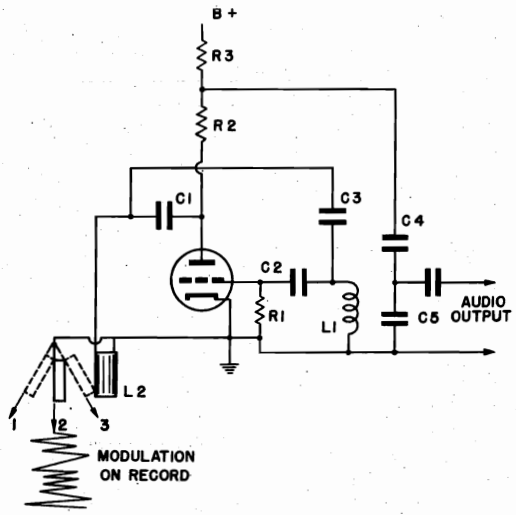

Simplified Circuit of Oscillator

©John F. Rider

Compliments of www.nucow.com

MODELS S14028, S14029, S14030, S14031, S14036

The grid coil L1 and other components of the oscillator are mounted in the oscillator pre-amp chassis, while the plate coil L2 is in the needle cartridge with vane and needle assembly. The coil is fixed and has 40 turns of No. 40 wire (approximate DC resistance 2 1/2 ohms). The stainless steel vane, which is in the field of the coil, is spot welded to the osmium-iridium tipped stylus.

Any movement of the stylus will cause a corresponding movement of the vane. As the stylus and vane follow the modulations in the record, changes in the mutual inductance between the vane and coil occur. In position 2 the vane is at rest, and a constant RF voltage appears across the plate coil. As the vane is set in motion and reaches position 1, it is at its greatest outward swing from the coil, resulting in low mutual inductance, low reflected resistance, higher Q, and a higher RF voltage across the coil. In position 3 it is at its greatest inward swing, resulting in a high mutual inductance, high reflected resistance, lower Q and a lower RF voltage. It can be seen that the amplitude of the RF voltage which appears across the coil will vary with changes in Q, satisfying the condition for amplitude modulation. The position of the vane changes both the Q and L of the coil. Changes in L shift the frequency slightly, and a certain amount of frequency modulation is present, but since there is no frequency discrimination it remains undetected. Since the grid and plate coils are part of a single tuned circuit, any variations of amplitude of the RF voltage brought about by the changes in Q across the plate coil will also appear across the grid of coil L1, causing a shift in the average plate current through the plate load resistor across which the audio output voltage is developed. Plate bend detection takes place since only the positive half of the grid swing causes an increase in the average plate current. These changes in the average plate current appear as audio voltage across the plate load resistor.

The 2.5 Mc RF voltage and the audio voltage both appear at the plate (pin 6) of the oscillator triode. R2, C4 and C5 filter out the RF voltage allowing only the audio component to the grid (pin 4) of the amplifier triode where it is amplified, fed through a shielded lead to the audio amplifier of the receiver and reproduced by the loud speaker.

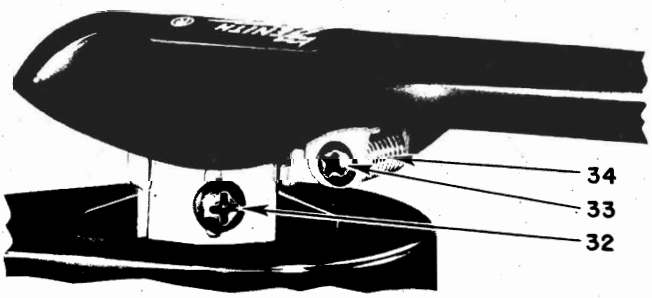

Tone Arm Set-Down & Height Adjustments

SET DOWN ADJUSTMENT

When adjusting the tone arm for proper set-down on the edge of the record, move set-up change lever to 7" position, place a 7" record on the turntable, turn the record changer through cycle by rotating the turntable by hand. Watch closely where the needle point of the Cobra cartridge lands on the record and adjust tone arm set-down adjustment screw (33) until proper landing position is obtained.

TONE ARM HEIGHT ADJUSTMENT

The tone arm height adjustment determines vertical rise of the tone arm. If the tone arm does not rise sufficiently it will not play a full stack of twelve records. On the other hand, if the tone arm raises too high it may hit the records resting on the record shelf. Set the tone arm height adjustment screw (32) so that the needle clears twelve unwarped records on the turntable. The tone arm housing must not hit the under side of the records on the record shelf when the changer is cycled after adjustment.

SLAB HEAD SCREWS

For maximum rigidity many components are locked into position with slab head screws. This type set screw provides a more positive grip. The slab head set screw wrench is available as part number 68-8.

SPEED INDICATOR ADJUSTMENT

It is possible that the speed of the record changer may not conform to the speed stop on escutcheon (23). Proper adjustments can be made in the following manner. Put a stroboscopic disc on the turntable, adjust speed change lever (18) until the turntable is turning at exactly 78 RPM. Stop the record changer by pulling the AC plug, remove the turntable, loosen the two adjusting screws (74) and move speed change lever (18) so that the point on the control knob indexes exactly at the 78 mark on the escutcheon (23). Then re-tighten adjusting screws (74) and replace the turntable. The turntable should now rotate at exactly 78 RPM, however, as a precaution, again check with the stroboscopic disc.

SPINDLE

The spindle on this record changer is composed of five separate parts. Spindle shaft (30) and ejector cam (29) are pressure-fit together and if either breaks, they cannot be replaced since the assembly operation is a machine operation. The spindle housing is composed of two separate portions which once again are pressure-fit together and require a machine operation for assembly. It is possible that spindle cap (31) may be pulled off spindle assembly (72) and if this does occur, it can easily be replaced by sliding a new spindle cap down over the spindle and then pressing in on the detent portion, which acts as a stop to keep the spindle cap from sliding off spindle (72). If breakage occurs other than loss of the spindle cap (31), the entire spindle assembly (72) must be replaced.

© John F. Rider

Compliments of www.nucow.com

MODELS S14028, S14029, S14030, S14031, S14036

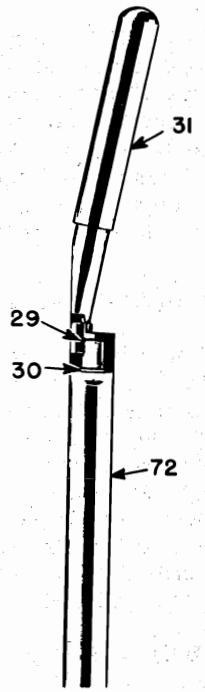

Spindle S-17424

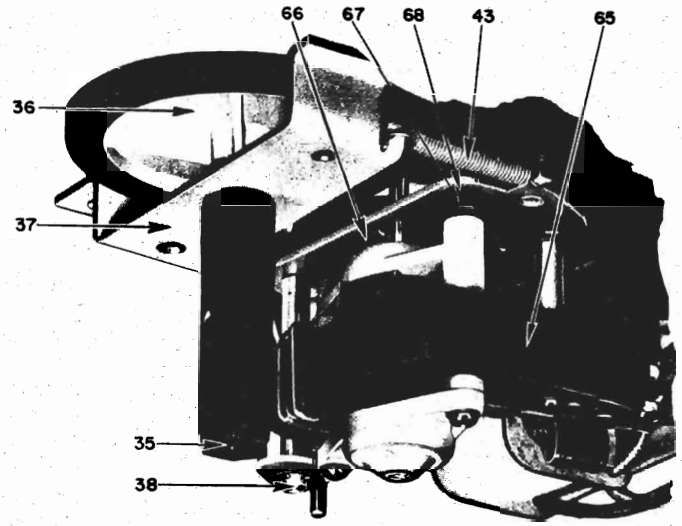

MOTOR AND MOUNTING MECHANISM

The motor (65) is shock mounted by the means of rubber grommets (68) and fibre washers (67) to mounting plate and stud assembly (66). The entire motor (65) and motor mounting plate (66) revolve about motor mounting stud (38). The point at which motor mounting stud (38) passes through motor mounting plate should be well lubricated to allow free action of the motor. The motor drive shaft is kept in contact and in constant pressure with drive wheel assembly (36) by the means of motor tension spring (43). This insures the proper friction contact between the motor drive shaft and drive wheel (36). The drive wheel (36) is firmly mounted in drive wheel bracket and bearing assembly and is pivoted on bearings at two points eliminating possible lateral motion. This reduces the possibility of WOWS. When the record changer is in shipment, the entire motor and bracket assembly (66) (65) is fastened to a second point by motor mounting screw (9). This eliminates the possibility of indentations forming in drive wheel (36) as a result of constant pressure and pounding of the motor drive shaft during shipment.

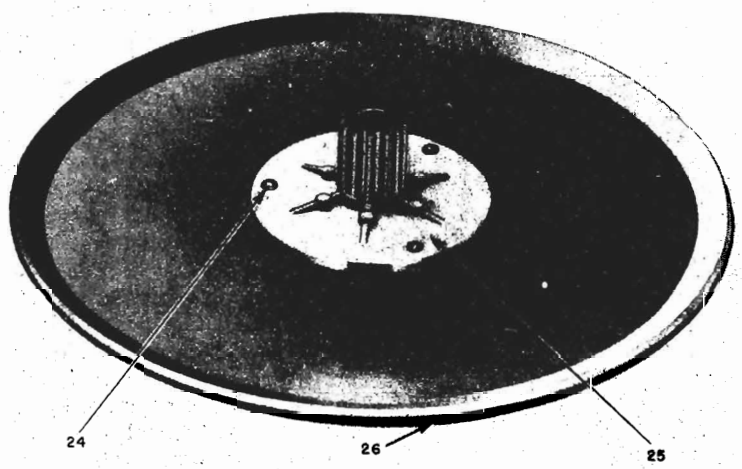

TURNTABLE

©John F. Rider

Compliments of www.nucow.com

There is little possibility of any damage occurring to the turntable through normal usage. However, it is possible the turntable may be removed and dropped, thus damaging pinion and bearing assembly (25) so that it would have to be replaced. Replacement is quite simple. All that is required is to drill out the three rivets (24) on pinion bearing (25). When removing the rivets from the turntable plate or disc, be certain not to excessively disturb the flocking. Then obtain three new rivets (24) and re-rivet pinion bearing assembly (25). If the flocking is scraped or damaged or discolored it can be replaced by spraying the scraped portion with clear lacquer. Dip the entire turntable disc into a box of flocking, then brush off the excess.

TRIP CONTACT ASSEMBLY

For proper automatic rejecting, silver contact #2 on trip switch assembly (63) should be in proper relation to silver contact #1 on friction lever (47). The adjustment should be made with the record changer resting on the side nearest to the idler wheel and trip assembly (36). The turntable should be rotated sufficiently to move oscillating lever stud (55) to its maximum upward travel. The distance between the silver contact #1 on the friction lever (47) and silver contact #2 on trip switch (63) should be 1/16". If the distance is greater or less than 1/16", the support for the copper bronze strip on trip switch assembly (63) should be bent until this 1/16" gap is attained.

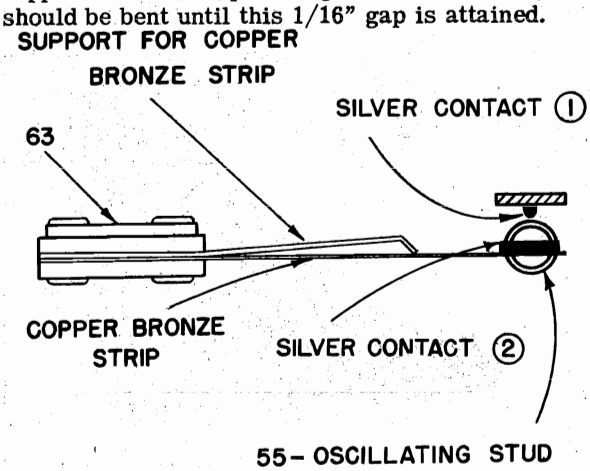

Trip Contact Adjustment

LUBRICATION

Additional lubrication should not be required for the life of the changer, but in cases of unusual use or high operating temperatures the changer should be lubricated as follows:

All shoulder rivets which hold moving parts, all stud shoulder mounting points on which moving parts operate and all C washers should be lubricated with a few drops of fine instrument oil.

The other moving surfaces should be coated either with Sta-Put Grease or Sta-Put Oil as indicated in the following two illustrations. The purpose of using the extremely fine instrument oil is its ability to penetrate into the moving metal parts. These saturated materials then act similarly to self-lubricated oilite bearings.

TROUBLE SHOOTING

NEEDLE DOES NOT TRACK ACROSS RECORD PROPERLY

a. Clean foreign material from around needle.

b. Check needle to see if the tip is bent or broken. Replace needle.

c. Hinge bearing binds. Check lateral movement of tone arm. It must move freely without binding.

d. Excessive vibration while playing an LP record. Any vibration cause by (1) unsteady mounting, (2) floor vibration, or (3) passing of heavy vehicles may cause the pickup to glide across the record grooves.

MECHANISM STARTS SLOWLY AND MOTOR GETS HOT

a. Check line voltage and frequency.

b. Check lubrication.

c. Motor windings damaged.

d. Room temperature abnormally low.

MOTOR FAILS TO RUN EVEN WHEN IT IS DISCONNECTED FROM CHANGER AND PROPER VOLTAGE AND FREQUENCY APPLIED DIRECTLY TO THE TWO INPUT LEADS OF THE WINDING

a. Open windings.

b. Damaged or frozen bearings.

c. Lower rear support bracket bent. Remove and straighten bracket--re-center armature.

NEEDLE SETS DOWN PROPERLY ON RECORD BUT SLIDES OVER THE RECORD GROOVES

a. Cabinet tilted.

b. Badly worn or broken needle cartridge.

TONE ARM FALLS OFF RECORD

a. Check tone arm set-down adjustment.

b. Check tone arm pivot bracket.

c. Changer not level.

©John F. Rider

Compliments of www.nucow.com

MODELS S14028, S14029,
S14030, S14031, S14036

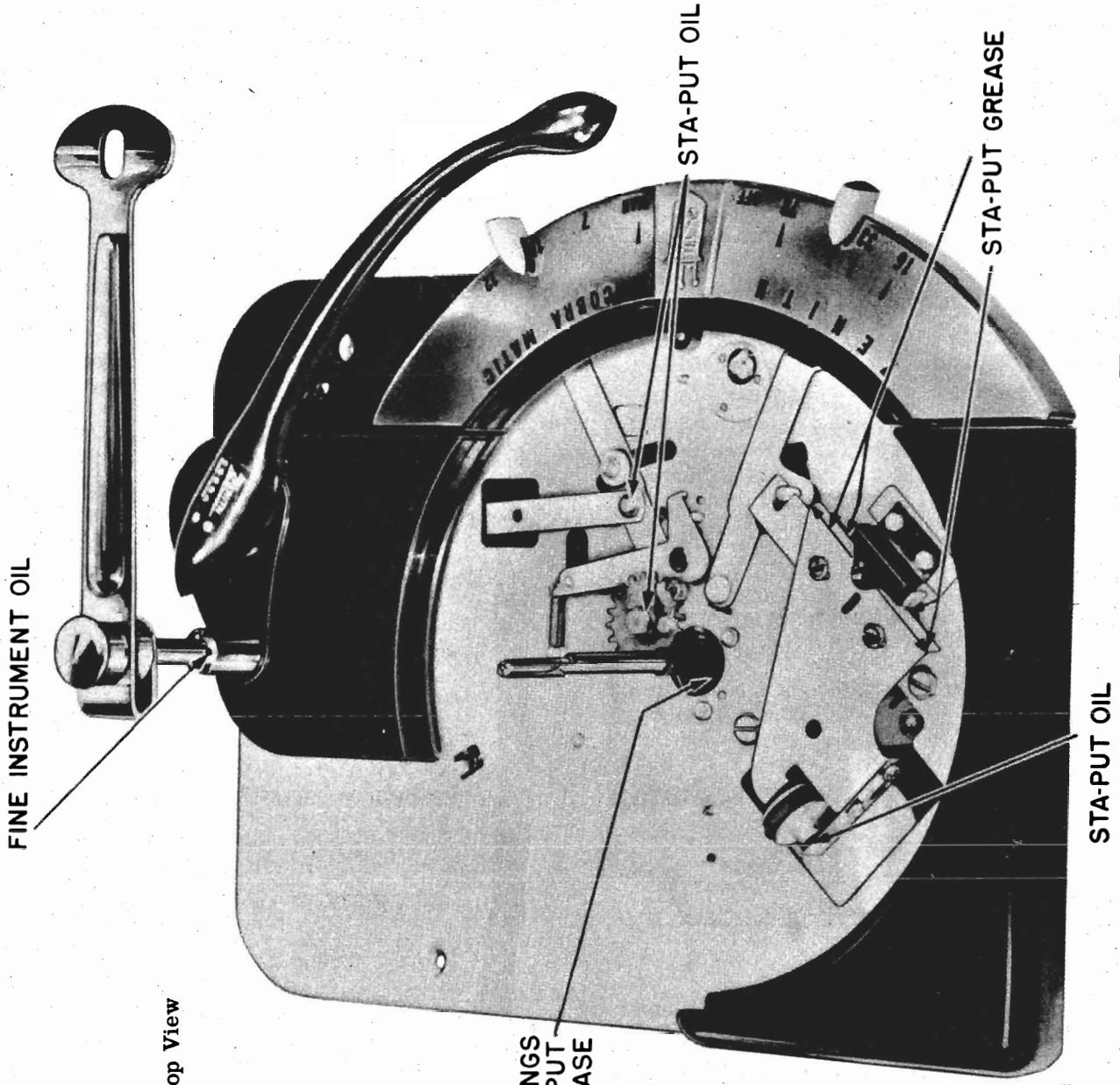

Lubrication Points - Top View

©John F. Rider

Compliments of www.nucow.com

MODELS S14028, S14029, S14030, S14031, S14036

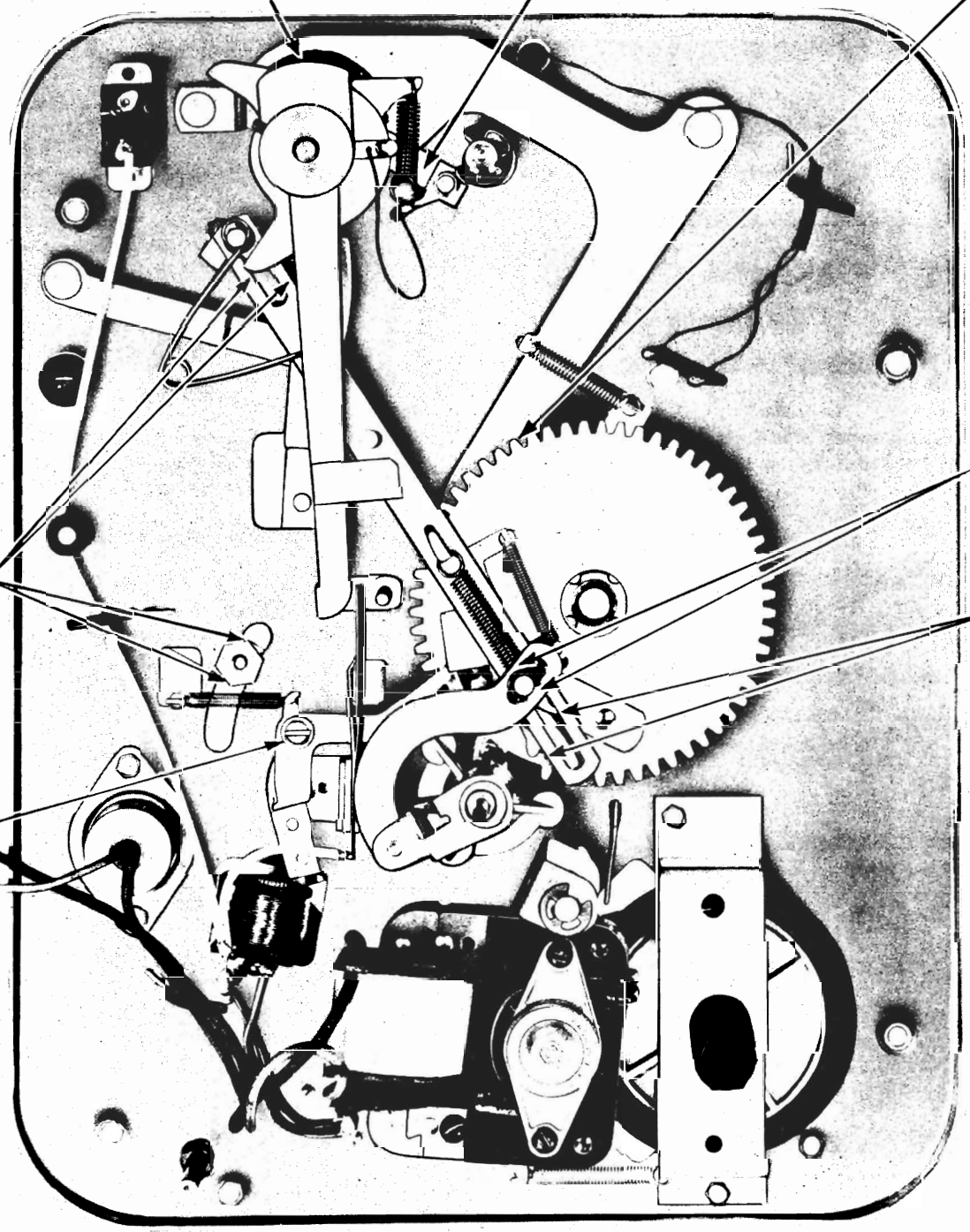

Lubrication Points - Bottom View

©John F. Rider

Compliments of www.nucow.com

MODELS S14028, S14029, S14030, S14031, S14036

SQUEAKS OR NOISES DURING PLAYING OF RECORDS

a. Friction between the records on the turntable and the spindle will occasionally cause squeaks. A thin coat of wax applied to the spindle will remedy this condition.

b. Check lubrication.

RECORD IS NOT HEARD ALTHOUGH CHANGER OPERATES

a. See that the receiver is set for Phono.

b. Check receiver audio by listening to radio.

c. Check the phono oscillator tube.

d. Check needle cartridge.

e. Check tone arm housing for broken leads.

RUMBLE, WOW AND MICROPHONICS DURING REPRODUCTION

a. Changer not "floated" properly. Remove packing strip. Loosen mounting bolts.

b. Motor leads pulled too tight preventing motor from "floating" freely.

c. Noisy phono oscillator tube.

d. Impression on idler wheel.

e. Check rubber motor shock mounts.

f. Check the motor drive shaft and be certain the plane of the shaft's diameter is parallel to the rubber surface of drive wheel assembly (36).

NEEDLE FAILS TO CLEAR MAXIMUM LOAD OF RECORDS ON THE TURNTABLE

a. Check tone arm height adjustment.

TONE ARM SETS DOWN TOO FAR IN OR OUT ON RECORD

a. Check tone arm set-down adjustment.

TONE ARM SET DOWN VARIES

a. Tone arm pivots loose.

CHANGER CONTINUES TO CYCLE

a. Check the trip switch adjustment.

b. Trip pawl sticks.

CHANGER WILL NOT CYCLE UPON COMPLETION OF RECORD

a. Be certain that the record has an eccentric center groove.

b. Check velocity trip mechanism.

CHATTER OF TRIP PAWL ASSEMBLY

a. Remove mounting bolt which fastens trip pawl assembly (62) to shoulder stud. Then load shoulder stud with Sta-Put Grease and replace and fasten trip pawl assembly.

ELECTRICAL NOISE WHEN TONE ARM IS MOVED

a. Check ground wire from metal tone arm stiffener to ground terminal used to terminate ground wire from the Cobra Cartridge.

b. Stud on oscillating lever and stud assembly (55) should be covered with vinylite tubing to prevent contact with friction lever and weight assembly (47).

c. Friction lever (47) at its most outward swing may contact wire guide stud on changer base plate. Cover this stud with vinylite tubing.

FRICTION LEVER (47) FAILS TO MOVE WITH TONE ARM

a. Check felt washer (69) for proper friction surface. If worn, replace.

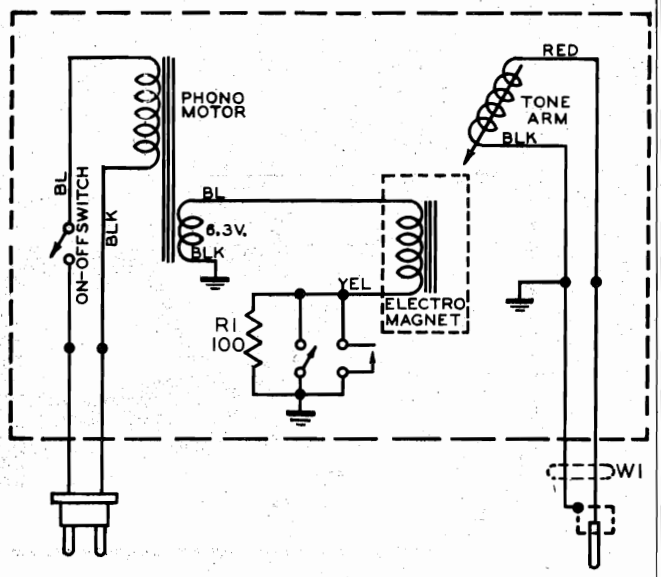

Wiring Diagram

© John F. Rider

Compliments of www.nucow.com

MODELS S14028, S14029, S14030, S14031, S14036

PARTS LIST for

S-14028, S-14029, S-14030, S-14031 and S-14036
Variable Speed Record Changers

Tone Arm Assembly

Diag. No.	Parts No.	Description
	12-1658	Cartridge Retaining Brkt.
33	69-261	Tone Arm Set-Down Adj. Screw
34	80-609	Landing Adj. Spring
	83-1636	Contact Support Strip
	91-1225	Red-Black Tone Arm Wire
	112-573	#2-32x1/4 R. H. S.T. (Cartridge Ret. Brkt. Mtg. Screw)
	112-619	#2-32x5/16 R.H.S.T. (3 used to Mt. Hinge Plate)
	127-68	Cartridge Contacts
	127-69	Cartridge Contacts
	148-125	Cobra Tone Arm Only
	S-15780	Red-Green Cobra Cartridge
	S-16905	Tone Arm Assem. (Complete) (Less Cartridge)
	S-16986	Hinge Plate & Brkt. Assem.

Miscellaneous

Diag. No.	Parts No.	Description
	6-59	Spindle Bearing
	6-61	Compression Spring Bearing
	6-64	Tone Arm Bearing
22	12-1742	Guide Brkt. (Idler Wheel)
31	15-81	Cap (Spindle)
	23-22	A.C. Connector (used on S-14028-30-31)
60	24-550	Switch Lead Cover
4	34-172	Osc. Gear (Part of S-16918)
13	43-187	Record Post Housing
11	43-188	Front Housing
7	43-189	Decorative Housing
12	46-865	Record Shaft Knob (Gold)
73	46-866	Reject Switch Knob
16	46-867	Speed & Record Size Control Knobs (2 Used)
	54-280	4-40x3/16x1 1/16" Hex Nut Steel N.P. (used on Lift Pin Assem.)
	54-282	Spring Nut (used on Lift Pin Assem.)
	56-284	Groove Pin 1/16" dia. (used on S-16913)(or 56-287)
	56-285	Groove Pin 3/32" dia.x3/8" lg. (used on S-16927)
	57-1613	Emblem Plate
20	57-1649	Speed Adj. Plate
	57-1650	Switch Mtg. Plate
23	57-1654	Escutcheon
58	60-16	Gear Segment Pawl
	63-1744	100 ohm 1/2W Ins. Res 20%
24	64-3	Rivet 1/8 dia.x9/32 lg Tubular (3 used on Turntable)
	64-6	Rivet 1/8 dia.x3/16 lg. Tubular (used on S-16912)
	64-430	Shoulder Rivet (8 used)
3	64-431	Shoulder Rivet (used on S-16918)
	69-43	8-32x3/8 R.H.M.S. Steel (Mts. S-13913)
32	69-262	8-32x1/2" Phill. R.H.M.S. Steel St. Br. (Tone Arm Height Adj.)
	73-99	8-32x1/4" Slab Hd. Set Screw (2 used on S-16908)
71	73-112	8-32x1/2" Slab Hd. Set Screw (used on 94-723)
	73-121	Special Set Screw (Tone Arm & Lift Pin)
	73-123	8-32x1/4" Allen Hd. Set Screw (used with 46-865)
	73-131	6-32x3/8" Slab Hd Set Screw (used on S-16917)
2	80-582	Trip Lever Spring (2 used)
43	80-613	Tone Arm Lift Lever & Motor Tension Spring (2 used)
	80-645	Tone Arm Height Adj. Spring
42	80-698	Gear Segment Pawl Spring
	80-807	Spindle Compression Spring (used on S-16913)
10	80-808	Idler Brkt. Retaining Spring
45	80-809	Brake Spring
6	80-810	Idler Wheel Spring
	80-811	Tone Arm Swivel Spring
44	80-812	Tone Arm Link Spring
54	80-813	Tone Arm Toggle Spring
57	80-814	Ejector Lever Spring
	80-816	Compression Spring (used with S-16922)
	83-1574	Two Lug Terminal Strip
	85-482	ON-OFF Switch
50	85-483	Reject Switch
	93-53	1/32x11/64x3/8 Steel Washer (used on S-15505)
	93-416	1/32 thk.x13/64 I.D. x 5/8O.D. (used on Motor Mtg.)
	93-781	#8 Split Lockwasher Steel N.P. (used on S-13913)

©John F. Rider

Compliments of www.nucow.com

MODELS S14028, S14029, S14030, S14031, S14036

Diag. No.	Parts No.	Description
	93-784	Spring Washer (used on 94-722)
	93-876	Fibre Washer (used on S-13913)
67	93-900	Fibre Washer (3 used on Motor Mtg.)
	93-903	Steel Washer (3 used on motor Mtg.)
	93-968	.046 thk x .171 I.D. x 1/2" O.D. Steel Washer (used on 94-722)
69	93-1055	Felt Washer (used on S-16910)
	93-1056	Felt Washer (used on Idler Wheel)
	93-1070	Bearing Washer (2 used on 6-59)
	93-1071	Bearing Washer (2 used on 6-64)
64	94-722	Friction Bushing
70	94-723	Friction Lever Retaining Bushing (used on S-16910)
38	97-391	Motor Mtg. Stud
55	97-393	Osc. Lever Stud
	112-544	Record Changer Mtg. Screw
35	112-804	Compression Spring Retaining Screw (used on S-16922)
	112-805	4-40x1/2" Truss Hd. W. S. Steel Stat Br. (2 used to Mt. 85-483)
	112-806	#4x3/8" Binding Hd S.T. Screw (1 used on ea. 46-867)
	113-9	8-32x1/4 Hex Hd Sl. M.S. (1 ea. used on S-15505 & 94-722)
8	114-217	#8x1/4" Hex Hd. Sl. S.T. (7 used)
	114-248	6-20x5/16" Hex Hd. Sl. S. T. (2 used 43-187 & 189 - 3 Used 43-188)
	114-297	#6x1/4" Hex Hd. Sl. S. T. Screw (2 used 85-482 & 1 used on 83-1574)
9	114-345	10-32x3/8" Hex Hd. Sl. M.S. Steel (used on Motor Mtg.)
74	114-347	#8-32x3/8 Hex Hd. (2 used on S-16919)
	114-348	8-32x5/16 Hex Hd. S. T. (3 used on S-16913 & 2 used 199-134)
	114-357	#10-32x3/8 Hex Hd. Sl. M. S. Red Finish (used on Motor Mtg. in Shipping)
46	117-145	Tone Arm Lift Lever
15	118-58	Set Up Link
68	125-61	Rubber Grommet (3 used on Motor Mtg.)
	135-16	Tone Arm Lift Pin Weight
65	141-129	Motor
65	141-131	Motor 50-60 cycle export
	184-14	1/8" dia. Steel Ball
	188-128	Retaining Ring (9 used)
	188-131	Retaining Ring (used on Motor Mtg.)
	188-137	Retaining Ring (used on pressure arm & shaft Assy.)
	188-140	Retaining Ring (used on Clutch Gear Assem.)
1	199-134	Record Pressure Arm Shaft Sleeve
61	S-13913	Magnet Coil Assem.
62	S-15505	Trip Pawl Assem.
51	S-16900	Discriminator Lever & Stud Assem.
18	S-16901	Speed Change Lever & Stud Assem.
17	S-16902	Set-Up Change Lever & Stud Assem.
53	S-16903	Actuating Lever & Pin Assem.
	S-16904	Tone Arm Brkt. & Lift Pin Assem.
52	S-16907	Tone Arm Shaft Assem.
49	S-16908	Tone Arm Lever & Bushing Assem.
47	S-16910	Friction Lever & Weight Assem.
40	S-16911	Brkt. & Stud Assem. (used on S-16912)
41	S-16912	Clutch Gear Assem.
39	S-16913	Gear Housing & Sleeve Assy.
59	S-16917	Ejector Lever & Link Assy.
19	S-16918	Osc. Gear & Lever Assem.
21	S-16919	Idler Wheel Brkt. & Shaft Assy
5	S-16921	Idler Wheel Assem.
36	S-16922	Drive Wheel Assem.
37	S-16923	Drive Wheel Brkt. & Bearing Assem.
66	S-16924	Motor Mtg. Plate & Stud Assy.
14	S-16927	Pressure Arm & Shaft Assy.
25	S-16929	Turntable Pinion & Bearing Assem.
26	S-16930	Turntable Assem. (Complete)
63	S-16933	Trip Switch Assem.
48	S-17166	Brake Lever Assem.
56	S-17391	Tone Arm Link & Stud Assy.
72	S-17424	Spindle Assem. (Complete)
		S-14029
	S-17028	Plug & Shielded Lead Assy. (Plug 58-75)
	S-17029	Plug & Wire Assy. (Plug 58-192)
		S-14030
	S-17068	Cable & Plug Assy. (Plug 58-166),
		S-14031
	S-16940	Twisted Wire & Plug Assy. (Plug 58-75)
	S-16988	Plug & Wire Assy. (Plug 58-192)
		S-14036
	S-17028	Plug & Shielded Lead (Plug 58-75)
	S-17029	Plug & Wire Assem. (Plug 58-192)
	23-22	A-C Connector

©John F. Rider

Compliments of www.nucow.com

MODEL C710,
Ch. 133

SPECIFICATIONS

The Hoffman Model C710 DraweRECORDER is a drawer-mounted disc recorder unit comprising a recording table and cutting arm for 78 rpm inside-out disc recording up to 10" diameter, and a self-contained amplifier and microphone preamplifier. The unit is normally used as a recorder only, and as such is installed in the record storage compartment of Hoffman radio-phonograph combinations. However, it may also be modified for use as a self-contained recorder and playback unit by the addition of a speaker and playback arm. (See Service Data No. 30, Chassis 133.)

APPLICATION

The Hoffman Model C710 DraweRECORDER may be installed in the following Hoffman receivers produced prior to the issuance of this data:

C506	C510	D522	900	912
C507	C515	D524	901	913
C509	C516	C530	902	C1006

In ordering Model C710, be sure to specify the model number of the set in which it is to be installed.

METHOD OF INSTALLATION

1. If the receiver cabinet has 13/16" side panels or 3/8" side panels with a cleat on the inside of the record compartment, locate and drill the mounting holes for the DraweRECORDER shelf per the instructions on the template furnished with the shelf.

2. If the receiver cabinet has 3/8" thick side panels with no cleat in the record compartment, it will be necessary to provide additional support for the outer end of the shelf. Glue a 1/2" thick by 3" wide by approximately 12" long wood cleat on the inside cabinet side panel of the record compartment, centering it at the hole location given on the template.

3. Locate and drill holes in the center partition of the receiver cabinet per the instructions on the template.

4. Mount the shelf using the wood screws at the outer end and the machine screws at the center through the partition.

5. Install the DraweRECORDER and adjust the slides as necessary for free operation.

6. Plug the AC lead from the DraweRECORDER into the receptacle on the receiver, and the audio lead into the jack marked "television" or "recorder." The Model C710 may be used to record signals from any type of home receiver by the addition of a connection in the audio circuit, ahead of the volume control and by making provision for the AC to the recorder.

MAJOR COMPONENTS

Amplifier and Recorder Chassis	133 (See Service Data No. 30)
Microphone	Part No. 9014
Drawer	Part No. 6540
Shelf	(Specify receiver model No. when ordering)

BLOCK DIAGRAM

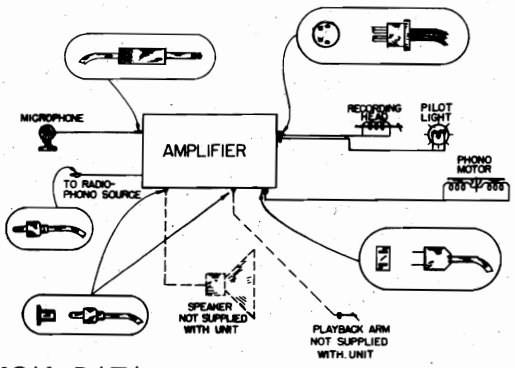

ELECTRICAL AND MECHANICAL DATA

AMPLIFIER

Average required input levels (0 db = 6 MW across 500 ohms):

Microphone jack	−49 db
Radio-phono cable	+ 3.2 db

Power Source—117 volts AC, 60 cycles, 70 watts

RECORDER

Motor—4 pole synchronous type

Recording head—Magnetic, impedance 3.2 ohms at 400 cycles

Recording direction: Center to Outside

Maximum time of recording (one side of disc):

10"—5.0 Min.
8"—3.5 Min.
6"—2.0 Min.

©John F. Rider

Compliments of www.nucow.com

MODEL C710,
Ch. 133

TUBE COMPLEMENT

1	12SJ7	Mike Preamplifier	1	35L6GT	Power Output
1	12SQ7	First Audio Amplifier	1	50Y6GT	Rectifier
1	12SQ7	Second Audio Amplifier	1	6AB5/6N5	Volume Indicator

SOCKET VOLTAGES

Tube	Function	1	2	3	4	5	6	7	8
12SJ7	Preamp.	0	0*	10	0	10	25	11.8AC*	59
12SQ7	1st Audio	0	−.35	0	0	−.4	75	11.5AC*	11.5AC*
12SQ7	2nd Audio	0	0	1.2	0	0	105	11.5AC*	11.5AC*
35L6GT	Output	0	32AC*	200	130	0	NC	32AC	8
6AB5/6N5	Indicator	5.5AC*	20	−.2	110	0	5.5AC*	—	—
50Y6GT	Rectifier	NC	45AC*	0	125	125	NC	45AC*	235

***All AC heater voltages are measured between tube heater pins.**
All voltages measured to chassis except as noted.
Line voltage 117 volts.
DC voltages measured with 20,000 ohm/volt meter.
AC voltages measured with 1000 ohm/volt meter.
All voltages DC except as noted.
Both volume controls in minimum position—no signal input.
Selector switch in "playback" position.

OPERATING INSTRUCTIONS

OPERATING THE RECORDER MECHANISM

Turn the ON-OFF switch on the radio to the ON position. This switch turns all of the equipment ON or OFF. Turn the RECORD RADIO-PHONO VOLUME switch on the recorder unit to the ON position. The recorder motor may now be started by turning the three-position switch on the recorder unit to either the RECORD or PLAYBACK position. To stop the recorder motor, place the switch in the STANDBY position.

DESCRIPTION OF OPERATING CONTROLS

A brief description of the various controls on the DraweRECORDER is given below. For location of these controls, see Figure 1.

1. VOL. INDICATOR. An eye type of indicator is used with this equipment. It enables the operator to maintain the proper volume level when recording either on radio or microphone.

   CAUTION: NEVER RECORD SO THAT THE LOUDEST SOUNDS OVERLAP THE PATTERN ON THE VOLUME INDICATOR. IF THE RECORDING LEVEL IS TOO HIGH THE RECORDING WILL BE RUINED. See paragraph on RECORDING LEVEL INDICATOR.

2. RECORD-MICRO. PORT. PLAYBACK VOLUME. The microphone intensity is regulated by this control when using a microphone with the recorder. The microphone should be plugged into the jack marked MICROPHONE. This control is also used as a volume control during playback when the unit is used as a portable instrument.

3. RECORD RADIO-PHONO VOLUME. This control is used for adjusting the intensity of the program material to be recorded from the radio or phonograph.

4. SWITCH. The knob to the left is a three-position switch with the following functions:

   a. STANDBY position—In standby position the amplifier tubes are heated and ready for immediate action, but the recorder is inoperative and the recorder motor is not running. This position is provided to enable the user to make an instantaneous recording of news flashes or other program material the user may wish to record at the spur of the moment.

   b. PLAYBACK position—The switch should be in this position when playing back a recording if the recorder mechanism is equipped with a playback arm. The auxiliary playback arm is not supplied as standard equipment. If it is desired to install a playback arm on the recorder unit, see the paragraph on PORTABLE USE.

   c. RECORD position—The switch should be placed in this position when making a recording.

MICROPHONE RECORDING

When recording with the microphone proceed as follows:

1. Plug the microphone into the MICROPHONE jack.
2. Place a recording blank on the turntable. Be sure the drive pin of the turntable is engaged in the drive pin hole of the recording blank.
3. Place the three-position switch in the RECORD position.
4. Adjust the RECORD-MICRO. PORT. PLAYBACK VOLUME control until the volume indicator almost closes when speaking into the microphone.
5. Move the recorder arm to the extreme left (toward the center of the recording blank) and lower the recording arm so that the needle starts cutting the blank. The recorder cuts from the inside to the outside, or opposite from a commercial record. This simplifies the problem of disposing of the thread.

©John F. Rider

Compliments of www.nucow.com

MODEL C710,
Ch. 133

6. After the recording has been started, make certain that the thread falls free of the cutting needle and toward the center of the record. It may be necessary to start the thread toward the center of the recording blank with the finger, but after a few revolutions of the turntable the thread will lie flat and no further attention will be required.

7. At the conclusion of the recording, cut a few blank grooves before lifting the recording head from the record.

RADIO RECORDING

When it is desired to record a radio program, follow the procedure given above for MICROPHONE RECORDING but use the RECORD RADIO-PHONO VOLUME control to regulate the intensity of the program material to be recorded instead of the microphone volume control. The program being recorded can be heard on the speaker during the recording process. This feature is provided so that the radio volume and recorder volume controls may be operated independently without any interaction. Similarly, the tone controls on the radio panel may be operated to obtain the most pleasing effects for the listener without affecting the quality of reproduction from the recorder.

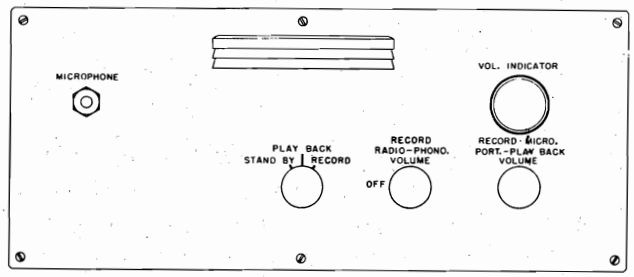

Fig. 1—HOFFMAN DRAWER RECORDER, PANEL VIEW

RECORDING MICROPHONE AND RADIO SIMULTANEOUSLY

If the RECORD RADIO-PHONO VOLUME control and the RECORD-MICRO PORT.-PLAYBACK VOLUME controls of the recorder are operated simultaneously, a combination recording of both radio and microphone may be obtained. When making this type of recording, the procedure described under RADIO RECORDING AND MICROPHONE RECORDING should be followed.

RECORDING PHONOGRAPH RECORDS

To make a copy of a phonograph record proceed as follows:

1. Place the switch on the radio panel in the PHONO position.

2. Turn the RECORD RADIO-PHONO VOLUME control to ON.

3. Start the record changer, which should be operated manually, and adjust the RECORD RADIO-PHONO VOLUME control on the DraweRECORDER until the volume indicating eye almost closes on the loudest sounds. The volume level is now properly adjusted to make the recording.

4. Place the recording blank on the recording turntable. Be sure the drive pin of the turntable is engaged in the drive pin hole of the recording blank.

5. With the record player motor running, place the record player arm on its rest.

6. Start the recorder motor by placing the three-position switch in the RECORD position.

7. Move the recorder arm to the extreme left (towards the center of the recording blank), and lower the recording arm so that the needle starts cutting the recording blank.

8. Place the record player arm on the first groove of the record to be recorded.

9. When the recording has played through, back off the RECORD RADIO-PHONO VOLUME control on the DraweRECORDER and remove the recording arm from the record.

10. Stop the record changer.

ADJUSTMENT OF THE CUTTING HEAD

The depth of cut which the cutting needle makes on the surface of the recording blank is adjusted by turning the thumb screw on the cutting arm. The thread left by the cutting needle should be about the size of a human hair. To determine if the depth of cut is correct proceed as follows.

1. Start the recorder and cut a few grooves in a recording blank.

2. Note the size of the thread.

3. Raise the recorder arm and remove the arm from the turntable.

4. If the thread is too large, turn the adjusting screw on the cutting arm towards the next lower number to decrease the pressure of the cutting head. Various makes of recording blanks may require different adjustments to produce the same size thread.

INSTALLATION OF THE CUTTING NEEDLE

Loosen the needle set screw at the front of the cutting head. Place the new needle in the hole in the bottom of the recording head, and make certain that the set screw is tightened against the flat side of the cutting needle. Lower the recording arm to the rest position.

PORTABLE USE

Chassis 133 recorder may be converted to independent portable operation as follows:

1. Select a standard single-hole-mount playback arm with a crystal cartridge capable of .5 to 1.0 volt output and mount the arm in the hole just behind and to the left of the turntable.

©John F. Rider

Compliments of www.nucow.com

MODEL C710,
Ch. 133

2. Using a standard phono plug, attach the playback arm cable to the "playback" phono input receptacle. (See Figure 2.)

3. Using a second standard phono plug, attach a 3.2 ohm PM dynamic speaker to the "speaker" jack. (See Figure 2.)

RECORDING LEVEL INDICATOR

For proper recording level operation, the VOLUME indicator must be adjusted so that the eye just closes when approximately ½ watt of power is applied to the recording head. One-half watt of power produces good quality home recordings and allows a margin of safety to prevent overloading on high amplitude peaks. This recording level produces records with a playback level slightly lower than a commercial record, so that the volume control on a phonograph must be advanced farther than with a commercial record.

Use a constant 400 cycle source such as an audio oscillator for a reference signal. Connect the RADIO-PHONO INPUT wire to the signal source. Set the RECORD RADIO-PHONO VOLUME at about one-third of its clockwise rotation. Connect an AC voltmeter across the recording head. A convenient place to make this connection is from the ground to the white wire under the chassis at the recorder receptacle. Adjust the 400 cycle source output to produce 1.3 volts across the recording head. Approximately .5 volt signal input will be required. Set the VOLUME INDICATOR ADJUSTMENT, R26, located on the rear of the chassis, so that the tuning eye just begins to close with the 1.3 volt recording level.

The VOLUME INDICATOR is now adjusted so that proper recording level will be obtained from microphone or radio.

RECORDER MECHANISM

1. MAINTENANCE REPAIRS

Following is a list of symptoms and remedies for mechanical difficulties in the recorder mechanism.

A. Mechanical rumble or "thump" (usually evidenced by a "moire" or "spoke" pattern in the recordings).
   1. Flat spots or dents in the drive wheel tire. Remove turntable and drive wheel and resurface the tire by clamping the wheel in a drill press and holding a sandpaper or emery block against the tire. If this treatment will not remedy the trouble, it may be necessary to replace the drive wheel. Even though a new wheel is installed, it still may be necessary to surface the tire as above.
   2. Dirt or foreign matter on the inner rim of the turntable. Remove table, and polish the inner rim with fine emery or crocus cloth.
   3. Faulty motor mount grommets. Replace.
   4. Bent motor shaft. Replace armature.

B. Uneven groove spacing on recordings ("gathering").
   1. Dirt or foreign matter in the lead screw thread grooves. Clean the lead screw thoroughly with carbon tetrachloride and coat lightly with a good quality light grease.

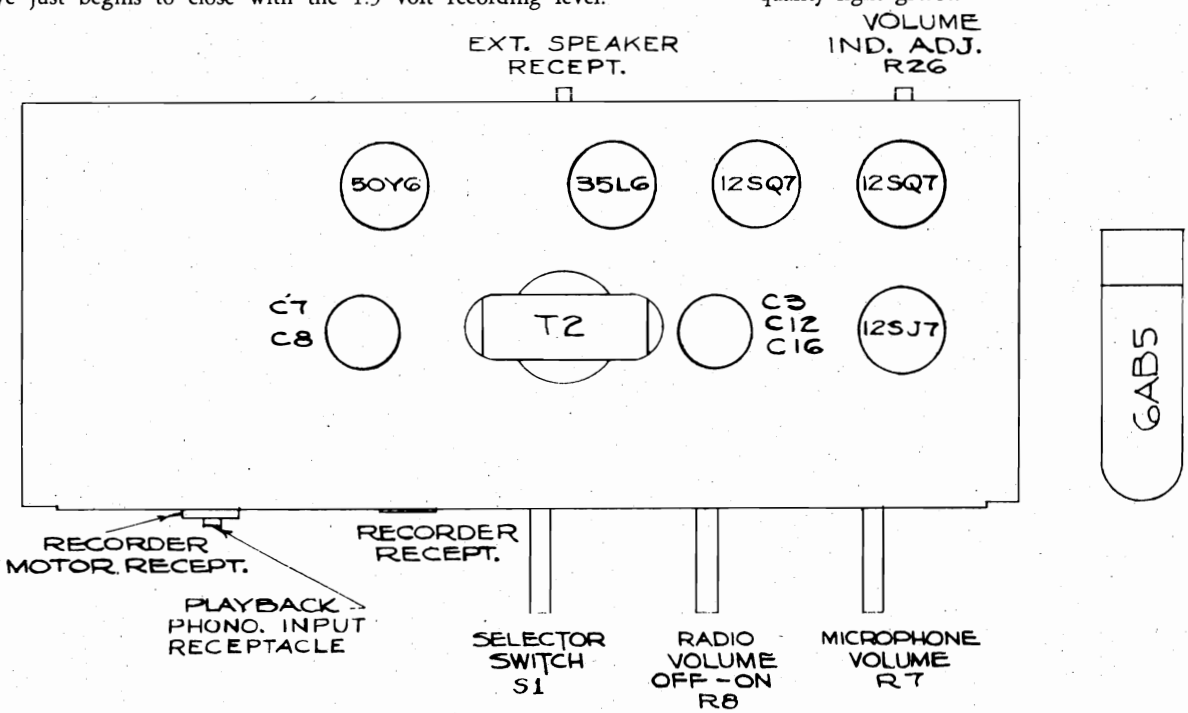

Fig. 2—TUBE LOCATION AND PARTS LAYOUT TOP VIEW CHASSIS 133

©John F. Rider

Compliments of www.nucow.com

2. Lead screw follower "riding up" on the lead screw threads. See MAINTENANCE ADJUSTMENTS below for the remedy for this condition.

3. Bent lead screw or faulty spur gear on lead screw. Replace lead screw.

C. "Wow" or uneven speed in recording.

1. Oil or grease on rubber drive tire or on inner rim of turntable. Remove turntable and clean drive wheel and inner rim of table thoroughly with carbon tetrachloride.

2. Drive wheel engagement spring too weak. If adjustments will not correct, replace the spring. CAUTION: If this spring is too strong, it will cause flats or dents to be formed in the rubber drive tire.

3. Disc center drive pin missing. Replace.

4. Faulty motor field. Replace motor.

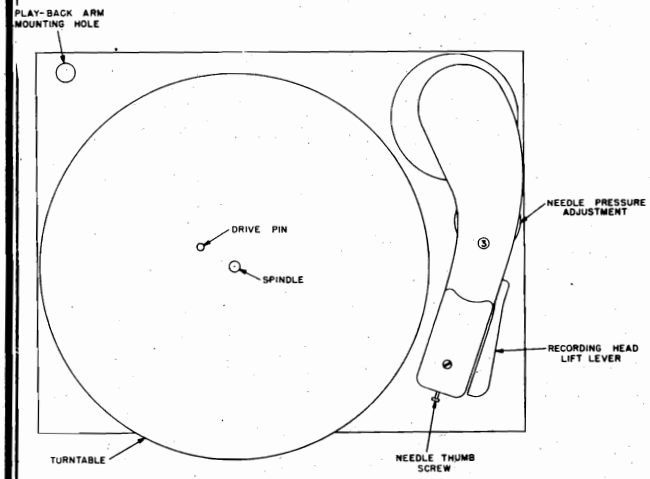

Fig. 3—RECORDER MECHANISM, TOP VIEW

2. MAINTENANCE ADJUSTMENT

A. Groove depth. This adjustment is a knurled wheel located at the bottom of the recording arm. (See Figure 3.) Rotating the wheel in a clockwise direction increases the depth of cut, while counterclockwise rotation decreases it.

The ideal setting for depth of cut is one that will give the 60-40 groove land ratio. However, for practical purposes it is satisfactory to gauge the depth of cut by the size of the chip thread, which should be approximately that of a human hair. In gauging depth of cut adjustments, always use a fresh disc and a sharp cutting needle.

B. Needle angle. This adjustment is a Phillips head screw located on the recording arm swivel post, just above the motor board. Clockwise rotation of this screw decreases the needle angle, while counterclockwise rotation increases it. The adjustment should be set so that the needle is at 90° to the recording disc surface. A convenient method of checking this is to set the needle on an uncut recording blank and set the adjustment so that the needle and its reflection form a straight line when viewed from the side. (See Figure 4.)

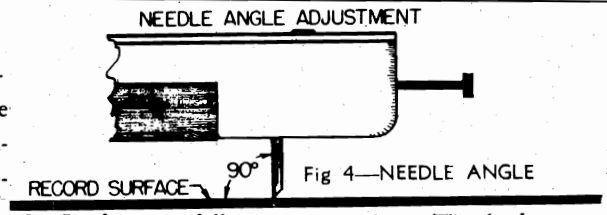

Fig 4—NEEDLE ANGLE

C. Lead screw follower engagement. The lead screw follower linkage is so designed that the follower should remain at 90° to the lead screw throughout the useful arc of travel of the recording arm. Adjustment of this angle is obtained by sliding the die-cast arm drive bar in or out in its socket at the base of the arm swivel. A set screw is provided to lock this adjustment in position. Maladjustment of the follower engagement will cause riding up of the follower and "gathering" in the recordings made on the machine.

D. Lead screw end play adjustment. This adjustment is a large set screw and lock nut at the spindle end of the lead screw. With the worm spindle drive assembly well lubricated, this adjustment should be set tight enough so that the end play in the lead screw is negligible, and yet not tight enough to cause binding. A practical way of accomplishing this is to tighten the large set screw until it seats against the end of the lead screw, then back it out about ¾ of a turn, and lock in position.

PARTS LIST

Symbol	*Description*			*Hoffman Part No.*
C1	25 Mf	25V	Electrolytic	4205
C2	.05 Mf	200V	Paper	4100
C3, C12, C16	20/20/20 Mf	450/450/25V	Electrolytic	4200
C4, C14	100 Mmf	20%	Mica	4000
C5, C11, C13	.02 Mf	400V	Paper	4106
C6	50 Mf	150V	Electrolytic	4210
C7, C8	50/50 Mf	150/300V	Electrolytic	4208
C9	.005 Mf	600V	Paper	4102
C10	.002 Mf	600V	Paper	4118
C15	.01 Mf	400V	Paper	4112
C17	.1 Mf	200V	Paper	4111
C18	. 05 Mf	400V	Paper	4101

©John F. Rider
Compliments of www.nucow.com

MODEL C710,
Ch. 133

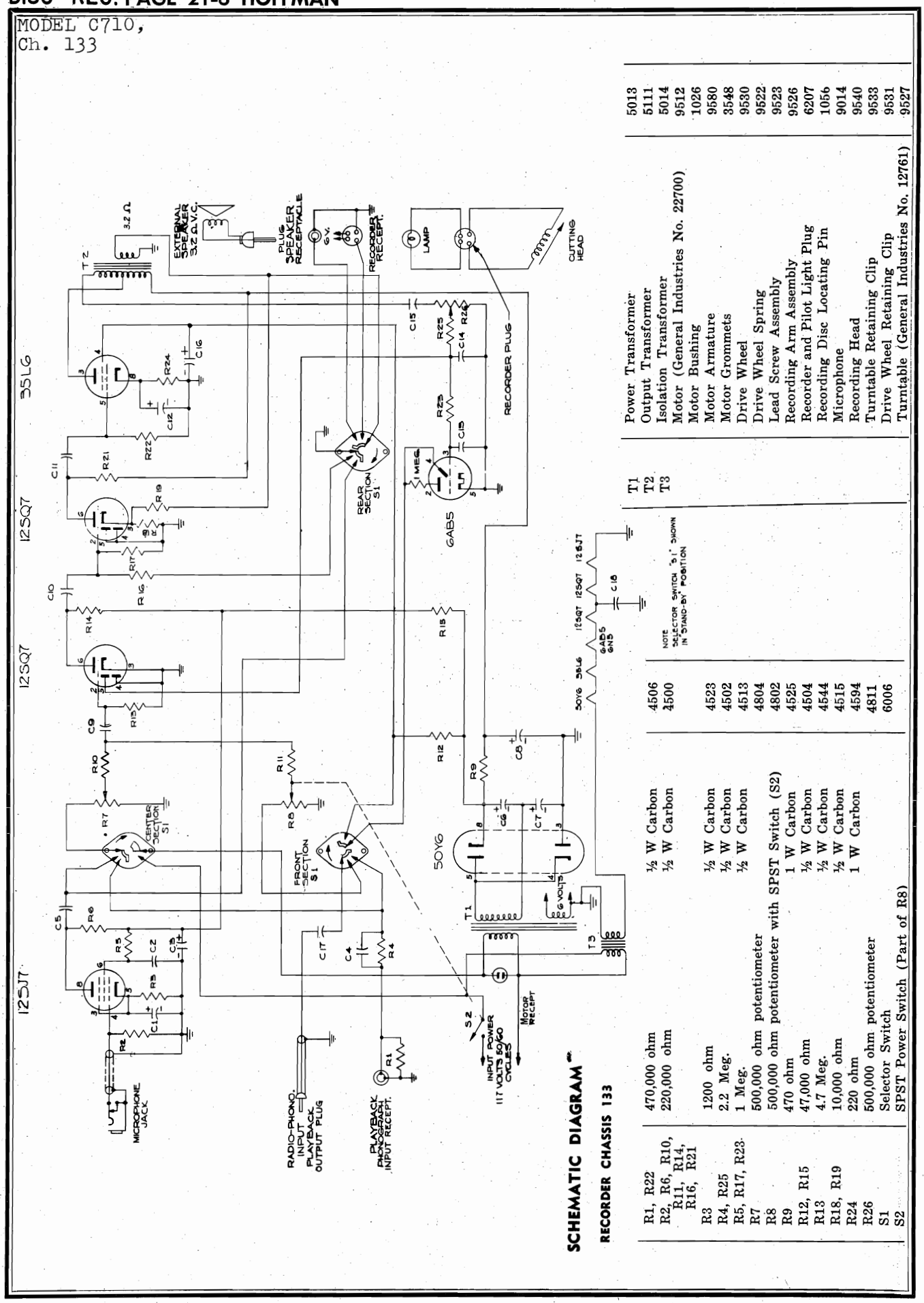

SCHEMATIC DIAGRAM

RECORDER CHASSIS 133

R1, R22	470,000 ohm	½ W Carbon	4506
R2, R6, R10, R11, R14, R16, R21	220,000 ohm	½ W Carbon	4500
R3	1200 ohm	½ W Carbon	4523
R4, R25	2.2 Meg.	½ W Carbon	4502
R5, R17, R23	1 Meg.	½ W Carbon	4513
R7	500,000 ohm potentiometer		4804
R8	500,000 ohm potentiometer with SPST Switch (S2)		4802
R9	470 ohm	1 W Carbon	4525
R12, R15	47,000 ohm	½ W Carbon	4504
R13	4.7 Meg.	½ W Carbon	4544
R18, R19	10,000 ohm	½ W Carbon	4515
R24	220 ohm	1 W Carbon	4594
R26	500,000 ohm potentiometer		4811
S1	Selector Switch		6006
S2	SPST Power Switch (Part of R8)		

T1	Power Transformer	5013
T2	Output Transformer	5111
T3	Isolation Transformer	5014
	Motor (General Industries No. 22700)	9512
	Motor Bushing	1026
	Motor Armature	9580
	Motor Grommets	3548
	Drive Wheel	9530
	Drive Wheel Spring	9522
	Lead Screw Assembly	9523
	Recording Arm Assembly	9526
	Recorder and Pilot Light Plug	6207
	Recording Disc Locating Pin	1056
	Microphone	9014
	Recording Head	9540
	Turntable Retaining Clip	9533
	Drive Wheel Retaining Clip	9531
	Turntable (General Industries No. 12761)	9527

© John F. Rider

Compliments of www.nucow.com

MECHANICAL ASSEMBLY ADJUSTMENTS

These adjustments are listed in the order in which they would be performed on a machine which is completely out of adjustment. Changing one adjustment will often affect succeeding adjustments and units should be carefully checked for proper adjustment after repairs have been made. If caution is used in dismantling units for repair, it is possible to avoid a great deal of labor.

A: Motor mounting. To replace drive roller (A-181) remove four screws (S-115) from rubber mounting points, lift out motor without disconnecting leads from switch terminals. Remove screw (S-118), immerse drive roller in Acetone solvent until adhesive bond softens. Remove drive roller from shaft.

B: Control knob should be set on transfer shaft with setscrew against the flat and the detect lever (A-109) setscrews should be tightened so that knob is vertical when the lever is in trough of detent slide (M-107), i.e. in "Stop" setting.

C: Tighten setscrews of motor transfer lever (A-110) when drive lever (A-181) is midway between rewind drive pulley (R-348) and flywheel (A-101) when control is in "Stop" position, (i.e. the travel should be equal in either direction). To check, operate brake lever (M-110). Clearance of brake shoe should be the same on either Forward or Rewind.

D: The motor power switch (P-119) is set in "Stop" position so that contacts are opened by biasing action of switch blade against bakelite pin in motor swing plate. The Erase "Satety" Switch is mounted in the "Stop" position so that contacts are open and a gap of approx. 1/16" appears between motor mounting assembly (A-112) and insulating bushing on switch. Switch is adjusted to make firm contact when control lever is in "Forward" position.

E: Forward stop lug (M-109) should be set so motor mounting assembly (A-112) comes to rest against it as soon as drive roller (A-181) makes firm contact with flywheel (A-181). Excessive pressure against flywheel prevents motor from starting when control lever is "snapped" into "Forward" position. Insufficient pressure results in slippage and "Wow". Best is to adjust forward stop lug (M-109) 1/16" from edge of swing plate at point where drive roller begins to touch flywheel.

F: There is no rewind-stop adjustment, however, rewind drive pulley is located in a hanger adjustable by bending stop lug (M-111) against the swing plate bushing, allowing a clearance between drive roller and rewind pulley in "Stop" position which allows drive roller to engage drive pulley in "Rewind" position. In this position, the rewind drive pulley hanger (A-111) is away from the stop, pressing drive roller by means of the torsion spring which needs no adjustment.

G: Set the pressure lever (A-113) so that it is vertical when the control knob is in the PLAY-RECORD position. Set the arm adjusting plate (M-105) so that it clears the pressure arm (M-104) by 1/64" when in this position. Normally adjusted, the tape guide (A-105) will move slightly or not at all, when control is turned from Off to Rewind.

H: The brake spring (P-116) should be adjusted so that brake (A-114) clears take-up pulley (R-348) and allows it to turn freely in forward or rewind positions. The in Off or Stop positions should be sufficient to prevent "coasting" of the reel. If brake clearance is unequal in forward or rewind, adjustment "C" is incorrect.

I: The tape guide block (A-105) is self locating. Tape pressure pads (A-103) located in this block are pressed forward by phosphor bronze pressure springs. These springs exert 15 grams pressure when not against the tape, and a maximum of 30 grams when in operating position with tape against the springs in guide block.

J: Adjust head pressure with two screws in slotted holes in head bracked (M-116). Both record head (A-106) and erase head (A-107) are adjusted into the tape guide block until the pressure pads on the reverse side show a movement slightly less than 1/32". This will give the 30 grams head pressure against the shoe for each head. "Wow" will result if too much pressure is used at this point.

K: Lateral movement of the heads is effected by moving them in desired direction by means of the screws in slotted holes that hold heads to head bracket. They should be positioned so there is no hanging up of the tape pressure guide when control lever is turned to stop position. Final adjustment on record head is made by turning head so that air gap in lamination is at right angles to direction of tape travel. This is best accomplished with the aid of a pre-recorded, constant 3000 cycle note. Adjustment is made by rotating head for maximum response on an output meter.

L: Open record or erase heads must be replaced completely. Worn out or damaged head lamination can be replaced as follows: Remove head and (M-116) bracket assembly without disturbing the individual heads. On record head (A-106) remove lamination (P-127) by prying with screw driver. Press in new lamination with fingers until it bottoms on yoke. Erase head (A-107) lamination (P-128) is replaced in same way. It is important to replace laminations with steel section uppermost in tape guide.

SERVICE TIPS

1. RECORDER "WOWS"
a. Felt pressure pad (A-103)worn.
b. Dirt on drive roller (A-181) or pressure roller (A-183)
c. Head pressure too great. Loosen screws holding head mounting bracket (M-116) and lower head slightly. Adjustment "L". Do not disturb head alignment adjustment "M".
d. Insufficient pressure on pressure roller (A-183). Tighten spring (P-114) or replace roller.
e. Drive or pressure roller eccentric.
f. Motor shaft binding. Shaft should turn freely when rotated by hand with control at "Off". If necessary realign bearings by tapping motor lightly with wooden mallet.

2. MOTOR RUNS BUT MECHANISM WILL NOT OPERATE
a. Motor stop improperly adjusted. See adjustment "G".
b. Drive roller worn or defective. Replace

3. MECHANISM RUNS FORWARD BUT WILL NOT REWIND OR VICE-VERSA
a. Rewind belt (P-112) or take-up belt (P-113) broken or off pulleys. Replace.
b. Motor stop improperly adjusted. See adjustment "G".
c. Pressure roller interferes with panel at Rewind. Remove roller and chamfer its bottom edge 1/16" x 45°.

4. TAKE-UP REEL DOES NOT TURN OR DRAGS
a. Brake dragging. See adjustment "H"
b. Take-up belt (P-113) broken, or off pulley. Replace belt.

5. MECHANISM DOESN'T OPERATE WHEN CONTROL IS "SNAPPING " INTO PLAY/RECORD OR REWIND
a. Motor stop improperly adjusted. See adjustment "G".
b. Housing screw hangs up lever arm on Rewind. Check screw length. Should be 15/16"

6. CONTROL KNOB TURNS BUT MOTOR ASSEMBLY DOES NOT SWING
a. Motor transfer lever (A-110) set screws loose. Tighten screws. See adjustment "C".
b. Lever loose at hub. Replace.

7. MOTOR ASSEMBLY SWINGS. MECHANISM OPERATES, BUT NO DETENT OPERATIONS

8. SLOW SPEED
a. Pressure arm spring (P-114) weak. Replace.
b. Head pressure too great. Raise head slightly. See adjustment "J".
c. Flywheel shaft binding. Check tightness of screws holding front and rear plates. Check plates for warpage.
d. Motor shaft binding. Realign bearings,

9. HIGH BACKGROUND NOISE (HISS)
a. Check tape
b. Defective Record-Playback head. Replace.
c. Record head magnetized. Demagnetize with 60 cycle A.C. Air core coil.

10. INCOMPLETE ERASE
a. Erase voltage too low.
b. Erase head open.
c. Poor contact on Play-Record switch.

11. POOR HIGH FREQUENCY RESPONSE
a. Head gap not at right angles to tape. See adjustment "K".
b. Defective head or worn lamination. See adjustment "L".
c. Poor head contact due to worn felt pressure pad. See adjustment "J".

AMPLIFIER SERVICE NOTES

MICROPHONIC OR NOISY ON PLAYBACK: Check 6J7 tube for noise by tapping. Replace. Microphonic checks should be made with the instrument fully warmed up.

DISTORTION ON PLAYBACK
a. Check all tubes.
b. Be sure when recording that recording light is barely flashing. An overloaded signal will cause distortion on playback.
c. Tone control should be at full treble when recording. Adjust only on playback.
d. Check all record and erase voltages as indicated on circuit diagram.
e. Be sure to check microphone plug for shorts, breakage or grounding.

©John F. Rider

Compliments of www.nucow.com

MODELS C-2, T-3

MECHANICAL ASSEMBLY PARTS LIST

PART NO.	DESCRIPTION
R 305	Pressure Arm Stud
R 306	Roller Stud
R 309	Lever Bushing
R 310	Lifter Stud
R 311	Roller
R 314	Transfer Shaft Bearing
R 319	Flywheel Shaft
R 320	Plate Spacer
R 324	Driver Hub
R 325	Pressure Roller Hub
R 329	Pressure Plate Spacer
R 331	Motor Transfer Shaft
R 344	Motor Transfer Stud
R 345	Motor Transfer Roller
R 348	Rewind Drive Pulley
R 356	Reel Drive Pin
R 360	Insulator Pin
R 367	Motor Pivot Bushing
R 419	Shouldered Nut
R 436	Take-Up Pulley

PART NO.	DESCRIPTION
R 437	Rewind Pulley
R 500	Rewind Shaft
R 501	Pivot Stud
R 502	Rewind Stud
R 503	Rewind Spindle
R 504	Take-Up Spindle
R 505	Spindle Collar
R 506	Grommet Spacer
R 507	Motor Plate Spacer
M 101	Front Plate
M 102	Rear Plate
M 103	Roller Plate
M 104	Pressure Arm
M 105	Arm Adjusting Plate
M 106	Lever
M 107	Detent Slide
M 108	Bearing Cup
M 109	Motor Stop Lug
M 110	Brake Lever
M 111	Rewind Arm

PART NO.	DESCRIPTION
M 112	Motor Mounting Bracket
M 113	Motor Mounting Bracket (Special Slot)
M 114	Motor Swing Plate
M 115	Switch Mounting Plate
M 116	Head Bracket
M 117	Spring Bracket
M 118	Pressure Pad
P 101	Insulator
P 102	Leather Brake Shoe
P 103	Fly Wheel Bearing
P 104	Reel Bearing
P 105	Plain Bearing
P 106	Steel Washer
P 107	Linen Washer
P 108	Varnished Cambric
P 109	Bakelite Washer
P 110	Felt Washer
P 111	Felt Washer
P 112	Rewind Drive Belt

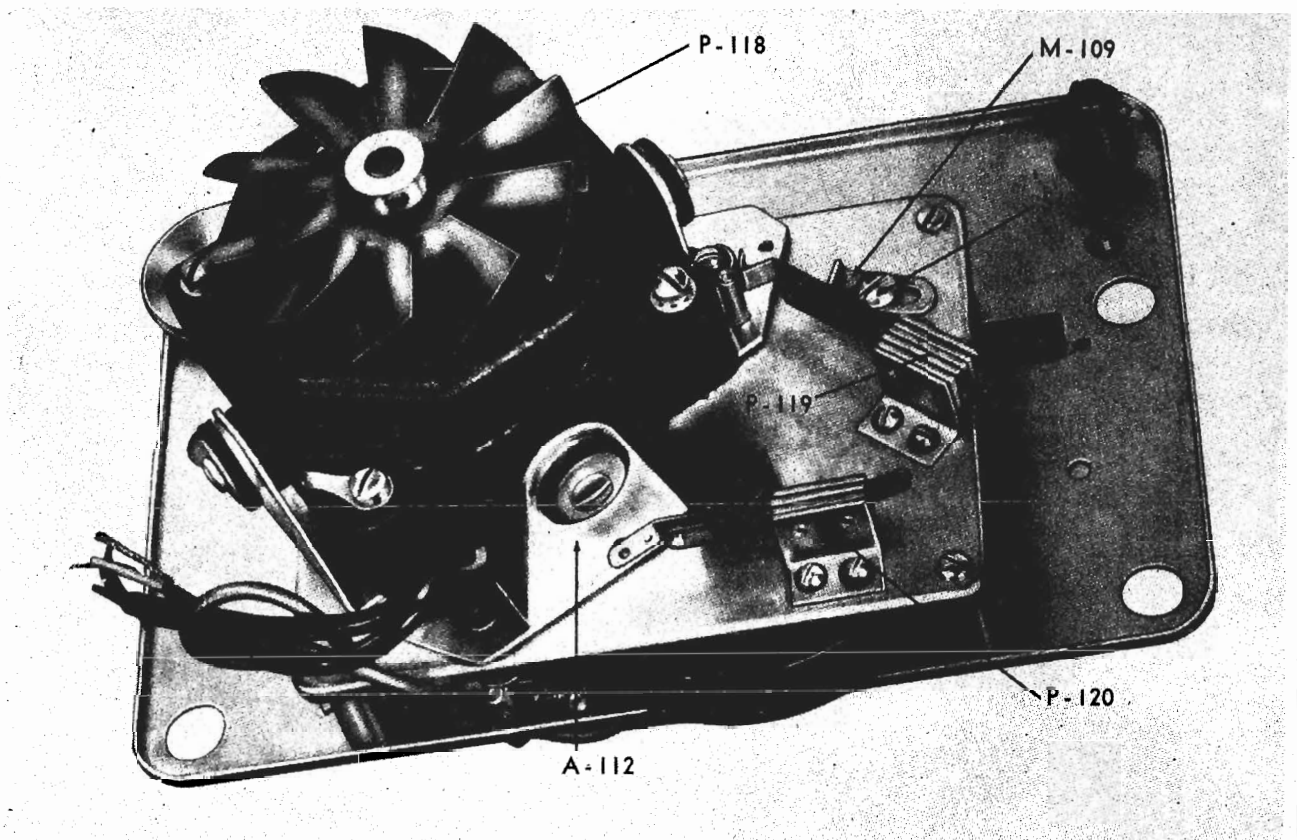

A-100 MECHANISM (Rear View)

PART NO.	DESCRIPTION
P 113	Take-Up Drive Belt
P 114	Pressure Arm Spring
P 115	Detent Spring
P 116	Brake Spring
P 117	Rewind Bracket Spring
P 118	Motor Fan
P 119	Stack Switch Motor
P 120	Stack Switch Erase
P 121	Ball Bearing
P 122	Control Knob
P 123	Rubber Grommets
P 124	Bakelite Guide
P 125	Motor
P 126	Pressure Coil Spring
P 127	Record Head Lamination
P 128	Erase Head Lamination
P 129	Inter-lock Switch
S 101	Cotter Pin
S 102	Hairpin Clip
S 103	Hairpin Clip
S 104	5-40 x ¼″ Screws

PART NO.	DESCRIPTION
S 105	6-32 x ⅛″ Allen Head
S 106	8-32 x 3/16″ Allen Head
S 107	5-40 x 5″16/ Screws
S 108	6-32 x ¼″ F.H. Screws
S 109	6-32 x 3/16″ Binder Head
S 110	⅜″ Washer 3/16″ Hole
S 111	#5 Shakeproof Lock
S 112	8-32 x 3/16″ Truss Head
S 113	5-40 x ⅝″ Screw
S 114	5-40 x ⅛″ Screw
S 115	8-32 x ⅝ Binder
S 116	⅝″ Washer #8 Hole
S 117	⅜″ Washer #5 Hole
S 118	5-40 x ½″ R.H.M.S.
S 119	9/32″ Washer #8 Hole
S 120	½″ Washer .315″ Hole
S 121	.125 x 7/32 Brass Rivet
S 122	⅜″ Washer 7/32″ Hole
A 100	Mechanism
A 101	Fly Wheel Assembly

PART NO.	DESCRIPTION
A 102	Motor Swing Plate Assembly
A 103	Pressure Pad and Felt Assembly
A 104	Spring Bracket and Pressure Coil Spring Assembly
A 105	Tape Guide Assembly
A 106	Record Head
A 107	Erase Head
A 108	Record & Erase Head Mounting Assembly
A 109	Detent Lever Assembly
A 110	Motor Transfer Lever
A 111	Re-wind Pulley Assembly
A 112	Motor Mounting Assembly
A 113	Pressure Lever Assembly
A 114	Brake Assembly
A 115	Take-up Shaft Assembly
A 116	Re-wind Shaft Assembly
A 181	Rubber Driver
A 183	Pressure Roller

©John F. Rider

Compliments of www.nucow.com

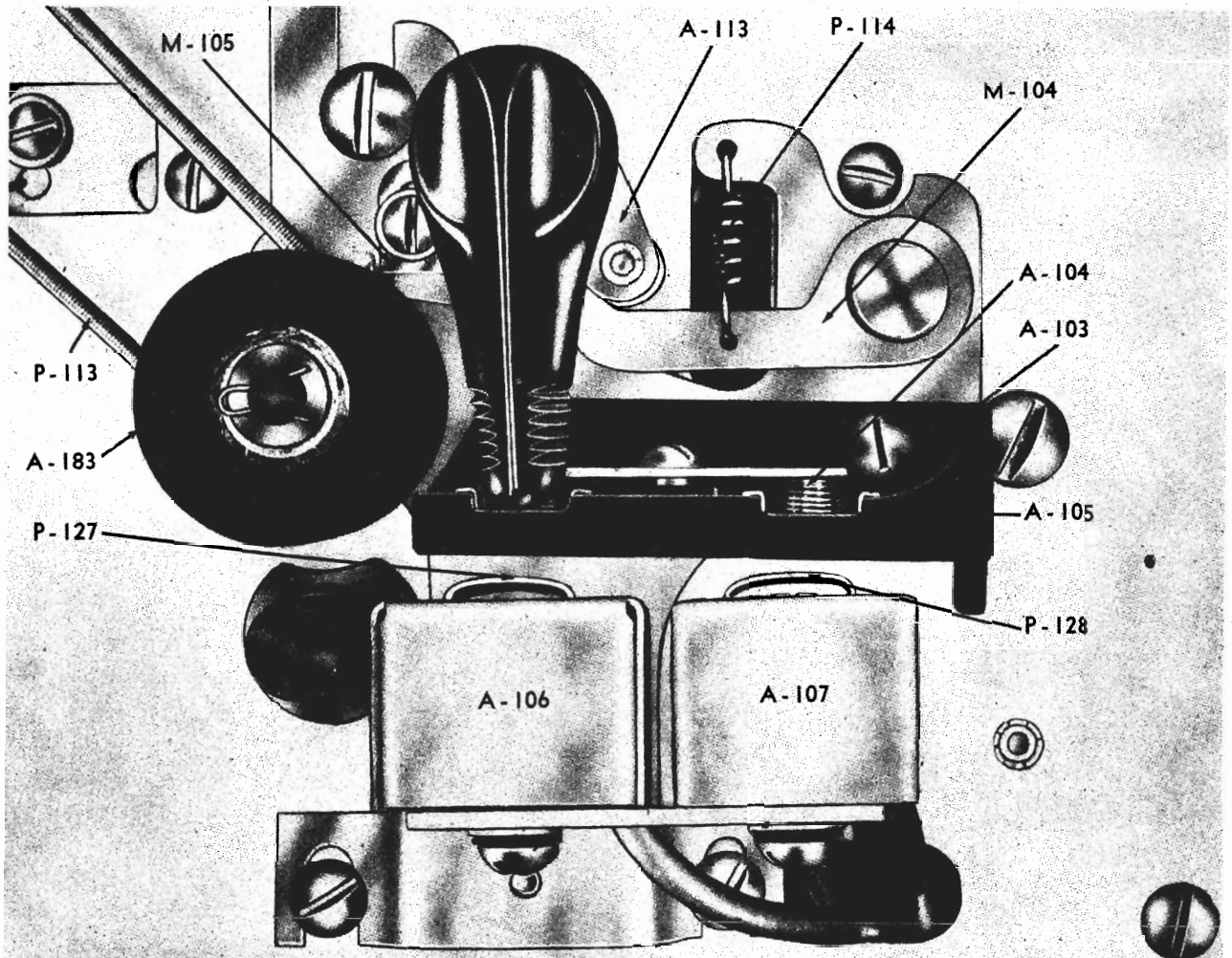

HEAD AND TAPE GUIDE DETAIL

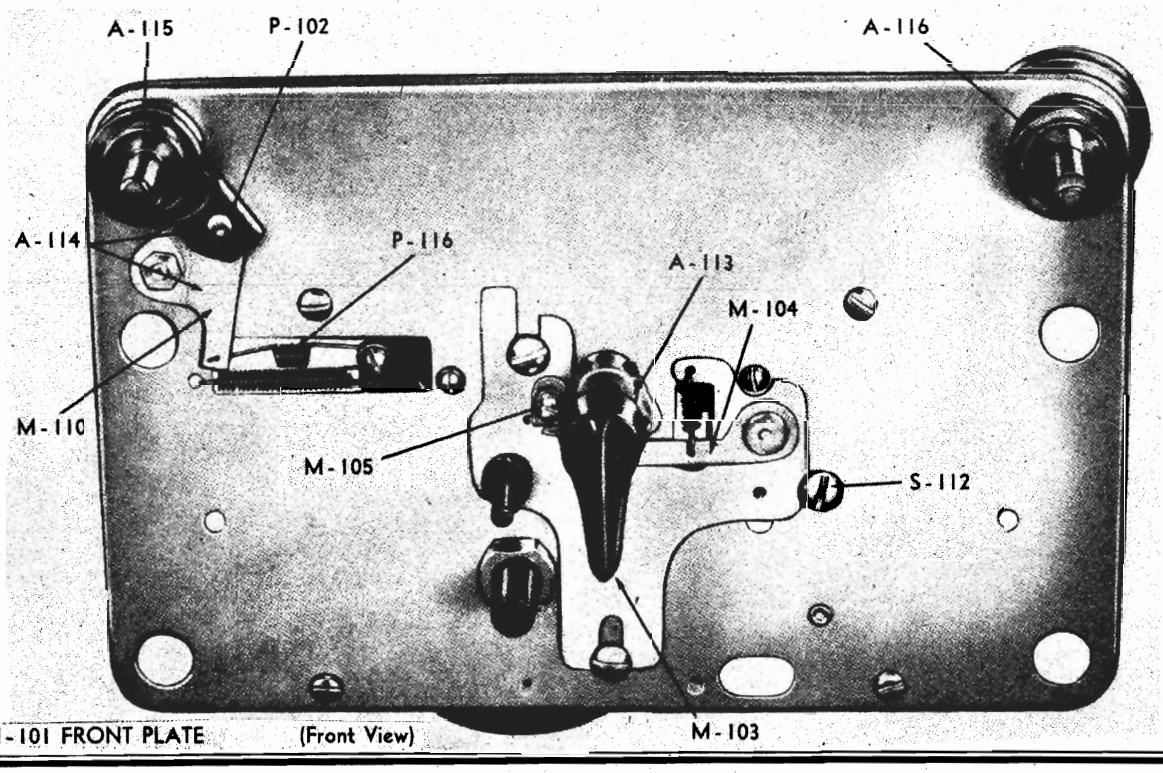

M-101 FRONT PLATE (Front View)

©John F. Rider

Compliments of www.nucow.com

MODELS C-2, T-3

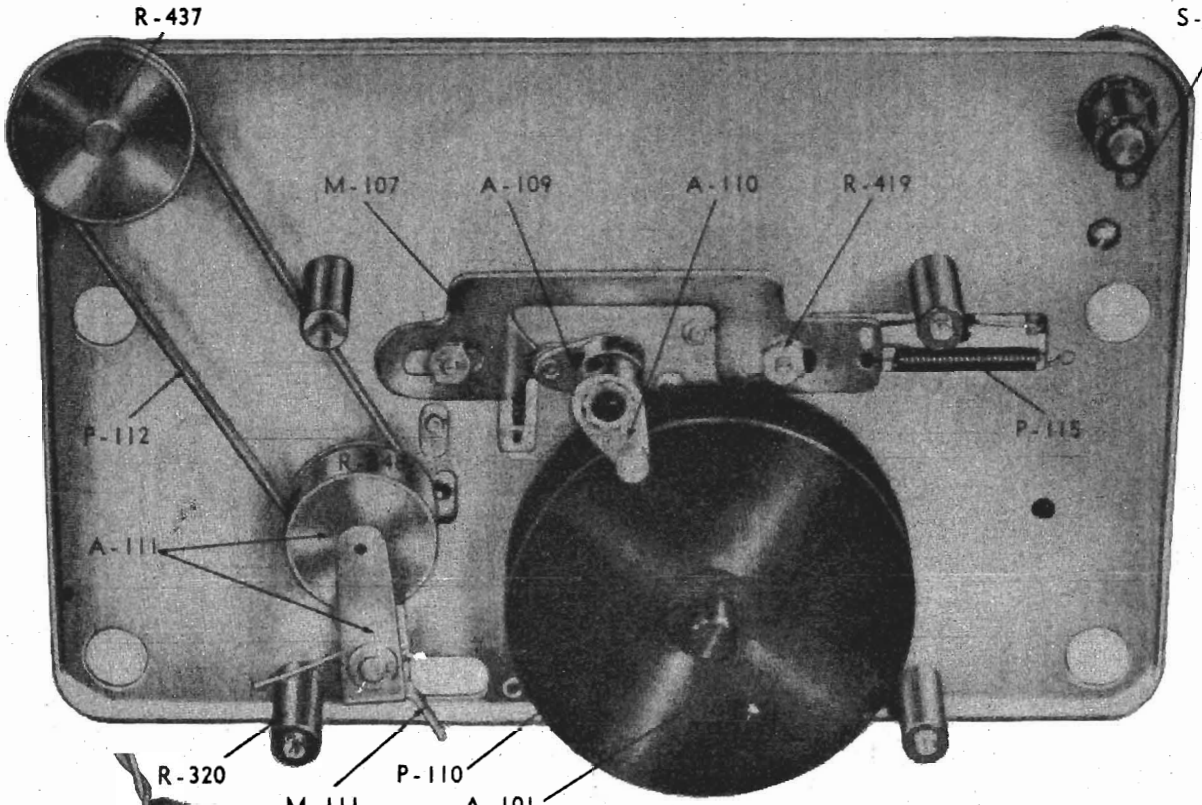

M-101 FRONT PLATE (Rear View)

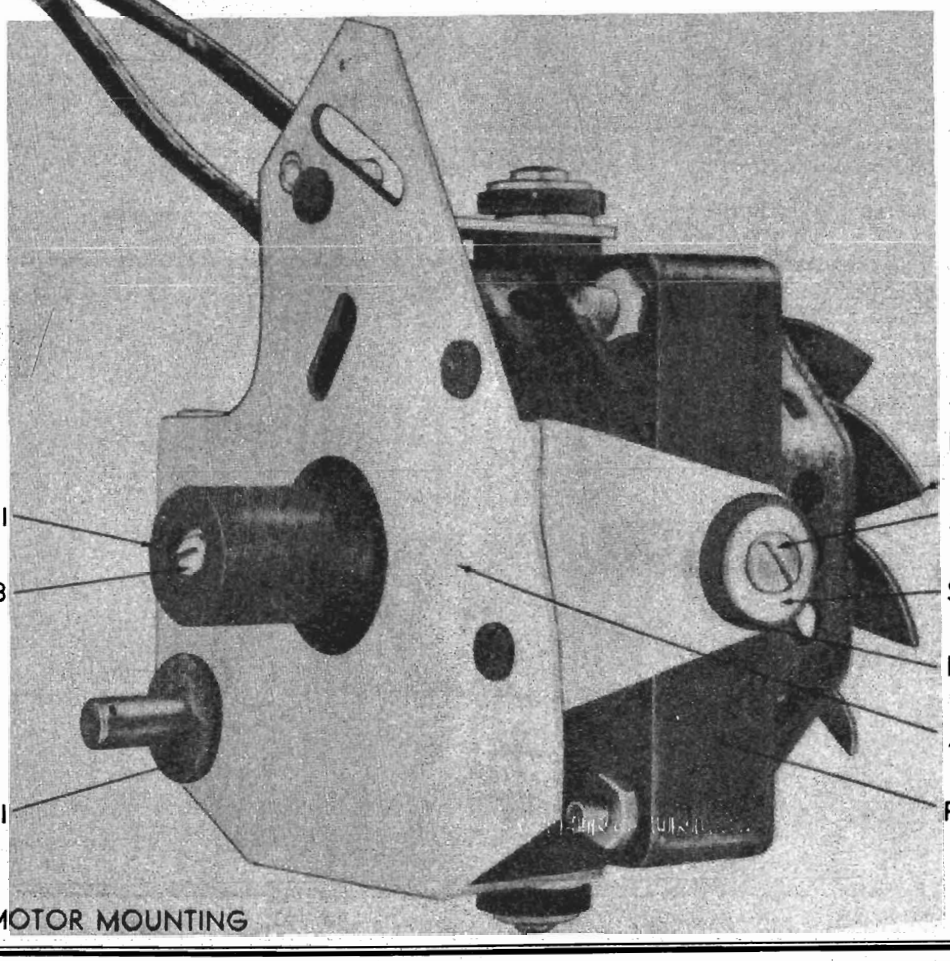

A-112 MOTOR MOUNTING

©John F. Rider

Compliments of www.nucow.com

MODEL C-2

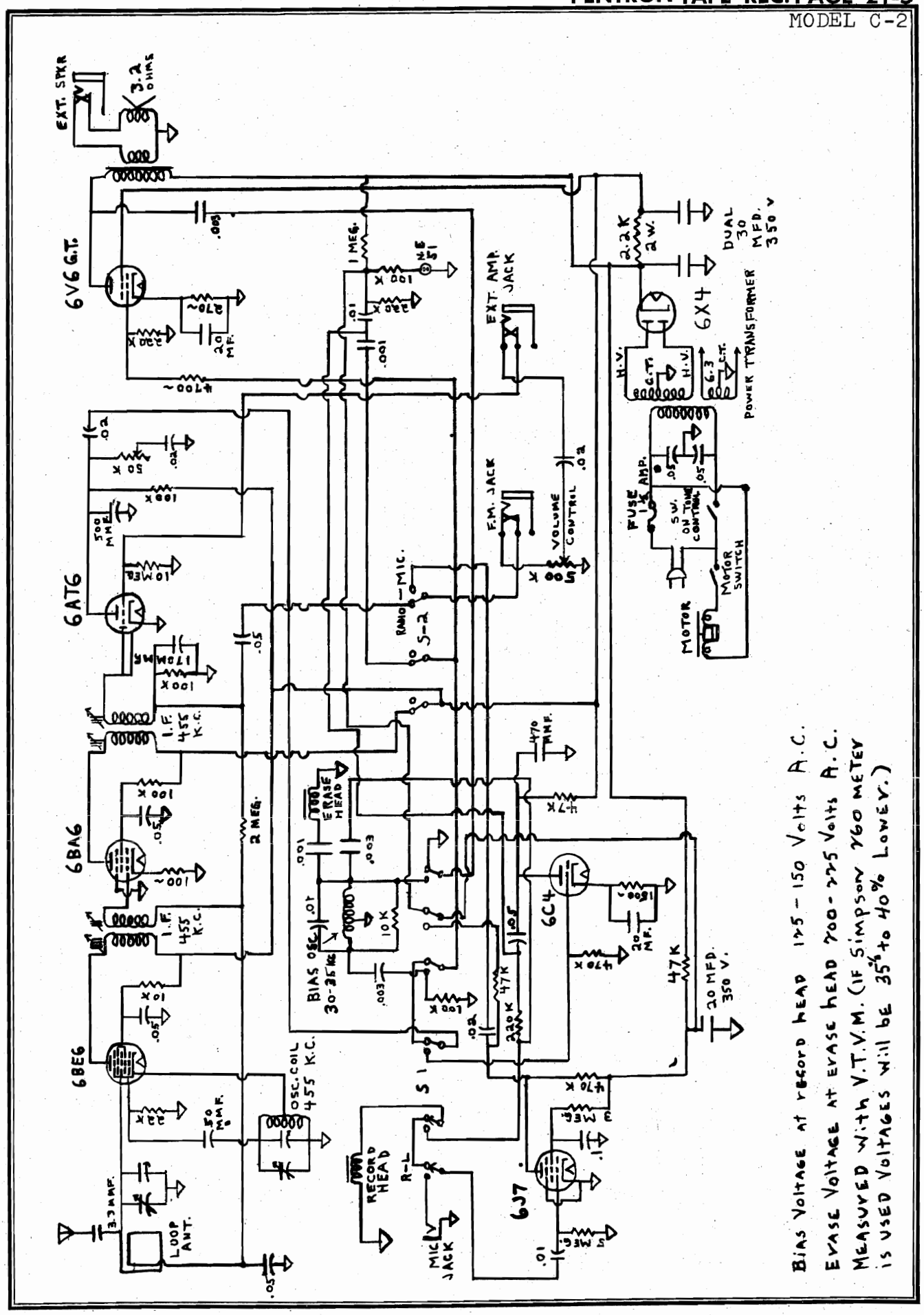

©John F. Rider

Compliments of www.nucow.com

MODEL T-3

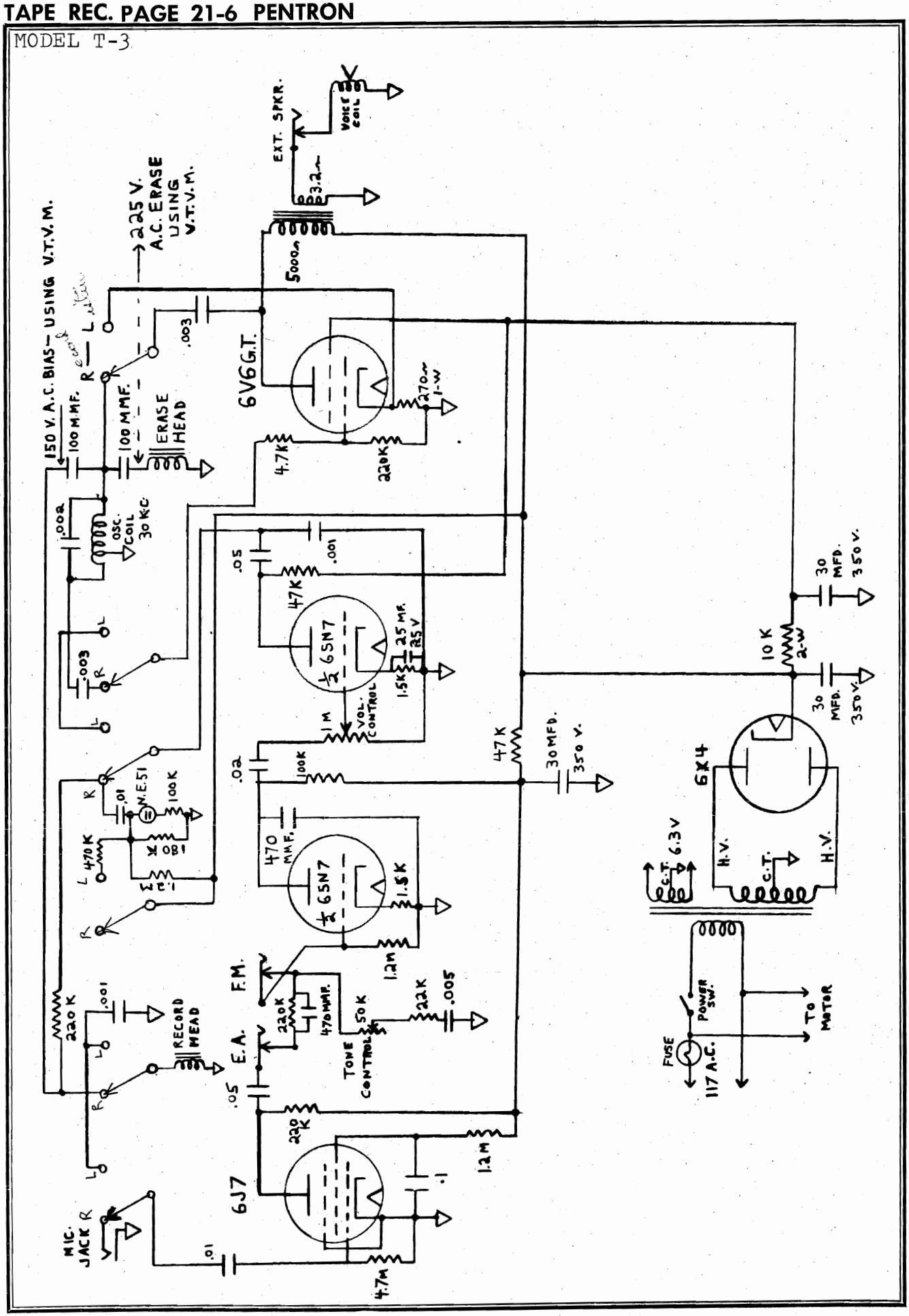

©John F. Rider

Compliments of www.nucow.com

OPERATING INSTRUCTIONS FOR SONAR TAPE RECORDER MODEL T-10

The Sonar Tape Recorder Model T-10 is high fidelity equipment composed of four basic units; namely the RPA-10 Amplifier, the PS-300 Power Supply, the Tape Mechanism and the Infinite Impedance Speaker System.

The T-10 Recorder is designed for 117 volt 60 cycle operation. Before applying power, be sure current is as outlined above.

CAUTION:

Toggle switch on the front panel marked "disc-tape" should be in "Disc" position until the operator is thoroughly familiar with the operation of the amplifier.

OPERATION:

Plug the two cables found in the rear of recorder case into the matching receptacles of power supply and speaker enclosure, respectively. Turn the control marked "speaker-gain" until a click is heard. This is the main power switch. When the power is on, the "Listen" indicator light will glow. If the "Record" indicator light is on, turn the "Listen-Record" switch to the "Listen" position. Permit the amplifier to warm up for one minute before using.

Remove the red wing screw on top of the tape unit before using. This wing screw should be re-inserted when carrying the recorder and removed when put in operation.

INPUTS:

There are four inputs on the front panel designated as LG1 (low gain 1), LG2 (low gain 2), "Mike 1" and "Mike 2". Control marked "Gain 1" controls LG1, counter-clockwise rotation from "0"; and "Mike 1", clockwise rotation. Control marked "Tape Gain" controls LG2, counter-clockwise rotation from "0"; playback of tape, clockwise rotation. When the "Listen-Record" switch is in the "Record" position, clockwise rotation of "Tape Gain" control then controls "Mike 2" input. Control marked "Speaker Gain" is completely independent of "Gain 1" control and "Tape Gain" control, and may be set to any desired level for playback or monitoring while recording.

When using LG1 and LG2, a wide range of impedances from 100 ohms to 500,000 ohms may be used without the need of a matching transformer. Microphone inputs are high impedance and will handle a microphone signal from -65DB. When using low impedance microphones, a cable transformer should be employed.

Any combination of inputs such as FM-AM radio, phonograph, etc., should be fed to LG1 or LG2. Microphones or Reluctance pickups should be fed to Mike 1 or Mike 2. Any combination of the above may be electronically mixed.

A fifth input located on top of the chassis, as noted in Figure 1, titled "Dubbing", is to connect two or more tape recorders together for simultaneous recording. Dubbing one tape to another, or playing two tape machines simultaneously, may be achieved. A low gain signal, such as a radio having its own volume control, may be fed to this fifth input without having to use any of the front panel mixing controls.

Frequency equalization for the recording amplifier is fixed. The "Bass" and "Treble" controls only affect the reproduced signal as heard through the speaker system. The bass control will boost 20DB and cut 20DB. The treble control will boost 15DB and cut 15DB.

For so-called flat frequency response, the bass control should be set to #2 and the treble control to #3. The operator, however, could set these equalizers to suit his particular desires.

©John F. Rider

Compliments of www.nucow.com

MODEL T-10

OPERATION OF TAPE MECHANISM:

Place empty tape reel on left hand spindle, keyed side down, so that key fits in drive pin on spindle.

Place loaded tape reel on right hand spindle, keyed side down, so that key fits in drive pin on spindle. Tape must come off reel, clockwise, with coated surface out. (Black side of paper tape is the coating. - Dull side of plastic tape is the coating.) If coating is inside, put a half twist in the tape before threading. When loaded tape reel is wound up on the take-up reel, rethread the right hand reel with coating outside.

Place left control knob, which controls the threading of tape, toward rear of case. This leaves the tape slot in the escutcheon open for threading. (See Control Sketch, Figure 2.)

Slowly draw several feet of tape off the loaded reel, through the slot in the escutcheon, keeping it taut against the drag of clutch, and allowing enough tape to thread and wrap on the unloaded reel. - See that tape is not twisted.

Pull left control knob toward front of case. This threads the tape against the capstan and tape guides. It also holds the tape in place while the balance of the operation is completed, that is, winding a couple of wraps on the empty reel. Tape is inserted in slot in reel center and wrapped on clockwise by rotating the reel by hand. - Care must be taken to insure that the tape is not twisted.

RECORDING:

Plug in a microphone in either Mike 1 or Mike 2, or a low level signal, such as a radio, to LG1 or LG2. Set toggle switch from Disc to Tape and adjust the gain control corresponding to the input being used so the V.U. Meter will move with program material and will read a peak value of "0" once every few seconds to a minute, depending upon the nature of the program being recorded. Adjust "Speaker Gain" control to desired monitoring level. If a microphone is used, care should be taken to prevent a howl. Set the "Listen-Record" switch to the "Record" position.

Start tape in forward position by pushing right hand control forward (toward rear of case).

To record on the lower track, pull the right hand control toward the front of the case.

LISTENING:

Set the "Listen-Record" switch in the "Listen" position. Shut the V.U. Meter off. Adjust tape-gain control to #3, clockwise rotation. Start the tape machine as outlined under Recording, and adjust speaker-gain control and equalizer to desired volume and tone, respectively. The V.U. Meter may be used to read the playback level on the tape. Adjust tape gain control so that the V.U. Meter does not read above + 3 V.U.

ERASING TAPE:

When recording, the tape is automatically erased. However, to erase a certain section of tape on either track, set controls marked "Gain 1" and "Tape Gain" to "0", and put the "Listen-Record" switch in the "Record" position. Start tape in motion dependent on track to be erased. Forward direction erases top track. - Reverse direction erases bottom track.

REWINDING TAPE AT HIGH SPEED:

If it is desired to rewind the tape before completing one channel in playback or recording, all that is necessary is to first reverse the direction of tape, and then unthread the capstan and tape guides by moving the left hand control toward the rear of the case, or into the unload position. This releases the drag on the tape and the clutches pick up speed.

When tape is completely rewound, or rewound to the point desired, place the right hand control in neutral or *STOP* position.

NOTE: When rewinding in the reverse direction, it may be necessary to rotate the right hand take-up reel by hand when the reel is three quarters loaded. This is normal, since the clutches are set to give accurate timing at 7.5" per second, in record and playback of tape on both tracks.

©John F. Rider

Compliments of www.nucow.com

CAUTION:

When tape mechanism is not in use, make sure the left hand control is towards the rear of case. This is to prevent the record playback head from resting on the capstan, causing "flats". Before engaging the left hand control, take up tape slack by rotating either reel by hand.

AUTOMATIC REWIND:

Wind the tape in the forward or clockwise direction onto the left hand reel where the program on the tape ends. Place a one inch piece of ¼" wide aluminum foil adhesive tape on the back (uncoated side) of tape.

Rewind tape in reverse direction back onto right hand reel. The machine is now ready for playing or recording two tracks automatically. The aluminum foil actuates a solenoid switch which is composite with the first tape guide at the right end of the forward escutcheon.

SINGLE TRACK OPERATION:

The Sonar T-10 Tape Recorder will play tapes made on single track machines when operated in the forward direction. Single track recordings made on the T-10 Recorder, forward direction, may be played on any other single track recorder.

MONITORING:

A jack mounted on the front panel titled "Monitor", is designed to feed a pair of earphones, high or low impedance. The monitor output can also feed a booster amplifier or a telephone line when fed to a matching transformer having impedances of 100,000 ohm Pri. and 600 ohm Sec. The speaker gain control has no effect on the monitor level. The monitor level is controlled by controls marked "Gain 1" and "Tape Gain".

DISC RECORDING:

Since the RPA-10 Amplifier is a high fidelity unit, having a conservative rating of 10 watts output with exceptionally low harmonic distortion, it can be used for disc recording. The power output may be fed to a magnetic disc recording head. Simply determine the cutter impedance and connect to the power output having the corresponding impedance. The output transformer in the RPA-10 Amplifier is wired for 10 ohms and 500 ohms output, as noted in the schematic. However, any other impedance may be obtained since the secondary is of the multi-impedance type. The V.U. Meter may also be used as a cutting level indicator, by connecting the unused side of the toggle switch through a high resistance to the 500 ohm line. The exact value of resistance will be determined by finally obtaining the proper recording level on the disc and then setting the resistor so the meter reads "0" V.U. *Do not* disturb the V.U. Calibration control on top of the chassis.

AMPLIFIER DESCRIPTION:

As will be noted from the schematic diagram, the RPA-10 Amplifier has 11 tubes, five of which are dual purpose triodes. The pre-amplifier section uses two 12SJ7 tubes and one 12SC7 tube. These three tubes have D.C. voltage on their filaments, obtained from the cathodes of the 6L6 output tubes. The three tubes in the high gain pre-amplifier and low gain input circuits are purposely operated at reduced filament voltage to give a better signal-to-noise ratio.

The 6SJ7 tube is the tape recording amplifier having the necessary equalization in the grid circuit. This stage gets the signal from the plates of the 12SC7 tube. The 12SC7 tube also feeds the 6SN7 tube used as a volume indicator stage working the V.U. Meter. The 6SL7 stage also gets its signal from the 12SC7 tube. This 6SL7 stage is a voltage amplifier that feeds the high and low frequency equalizers. The other half of the tube feeds the monitor. The output of the equalizer feeds one half of the 6SN7 tube which is directly coupled to the second half of the tube, functioning as a plate cathode phase inverter, driving the 6L6's in push-pull. Inverse feedback is employed between the 500 ohm output winding and the 6SN7 driver tube. This feedback enables large power output with good regulation and low harmonic distortion.

The bias and erase circuits use a 6SN7 tube as the 70 K.C. oscillator and bias amplifier. Bias amplifier has an

©John F. Rider

Compliments of www.nucow.com

MODEL T-10

adjustable control mounted on the rear skirt of the chassis. The erase amplifier circuit uses a 6V6 tube to insure better than 55DB erasure.

POWER SUPPLY:

The power supply uses a 5U4G rectifier tube feeding two separate filter sections, as noted in the schematic diagram.

There are two B+ outputs, one for the 6L6 plates, the other for the voltage amplifiers and bias oscillator and amplifier. The power supply delivers 200 mils at approximately 370 volts out of the single choke section filter, and approximately 360 volts out of the two section choke filter. A 6.3 volt filament supply at 5 Amps. and 5 volts at 3 Amps.

Power supply has an A.C. outlet mounted on the side of the chassis to feed a tuner, or where an A.C. outlet may be required that is controlled from the amplifier A.C. switch. A 5 amp. type 3AG fuse is included in the power supply for line protection.

MAINTENANCE:

B+ voltage fed to the primary center tap of the output transformer is 370 volts. B+ measured from the screens of the 6L6 tubes is 360 volts. These voltages are measured with the "Listen-Record" switch in the "Listen" position. With the "Listen-Record" switch in the "Record" position, the voltages will be 350 and 320, respectively.

The erase voltage, with the tape machine running and the "Listen-Record" switch in the "Record" position, is 250 volts.

The bias voltage is set for 125 volts.

With the 6SN7 oscillator tube removed, feed a 5000 cycle tone into the amplifier, adjust the gain control for .5 volts, measured at the record playback head. Then adjust the V.U. Meter Control for "0" V.U. deflection.

All voltages are measured with a V.T.V.M. The bias and erase voltages are measured with a probe feeding the V.T.V.M.

Sonar Tape Recorder, Model T-10, occasionally will require minor adjustments to the tape mechanism. Depending on the use of this machine, it is advisable that the capstan be cleaned once a month with 3/0 sand paper. This is to insure proper traction at all times. One method of checking the traction between the capstan and the tape is to load the machine as outlined under "Operation of Tape Mechanism". Running in the forward direction, gently grab the right-hand spool. This will cause the left-hand knob to move forward, indicating proper tension.

The slipping clutches employed in this mechanism should be set and maintained to produce 3 to 4 ounces tape tension. This tension is measured with a vest pocket type postal scale. Fasten the leader coming from the tape to the scale, keeping the mechanism in the "Off" position, and draw the scale until the reel starts to turn. This will show the amount of tension on the tape. To increase or decrease this tension, there is provided a locking nut mounted directly on the bottom of each slipping clutch. Turning the nut counter-clockwise increases tension, clockwise rotation decreases tension.

Approximately once every three months, the two erase heads and the record playback head should be cleaned by dipping a pipe cleaner into carbon tetrachloride and swabbing the gaps free of oxide that will normally accumulate. Permit the heads to dry for at least five minutes before using. Do not put carbon tet on the capstan.

It is also advisable, approximately once every month, to clean the flywheel with a rag soaked in carbon tet, and also the two rear discs representing the slipping clutches.

©John F. Rider

Compliments of www.nucow.com

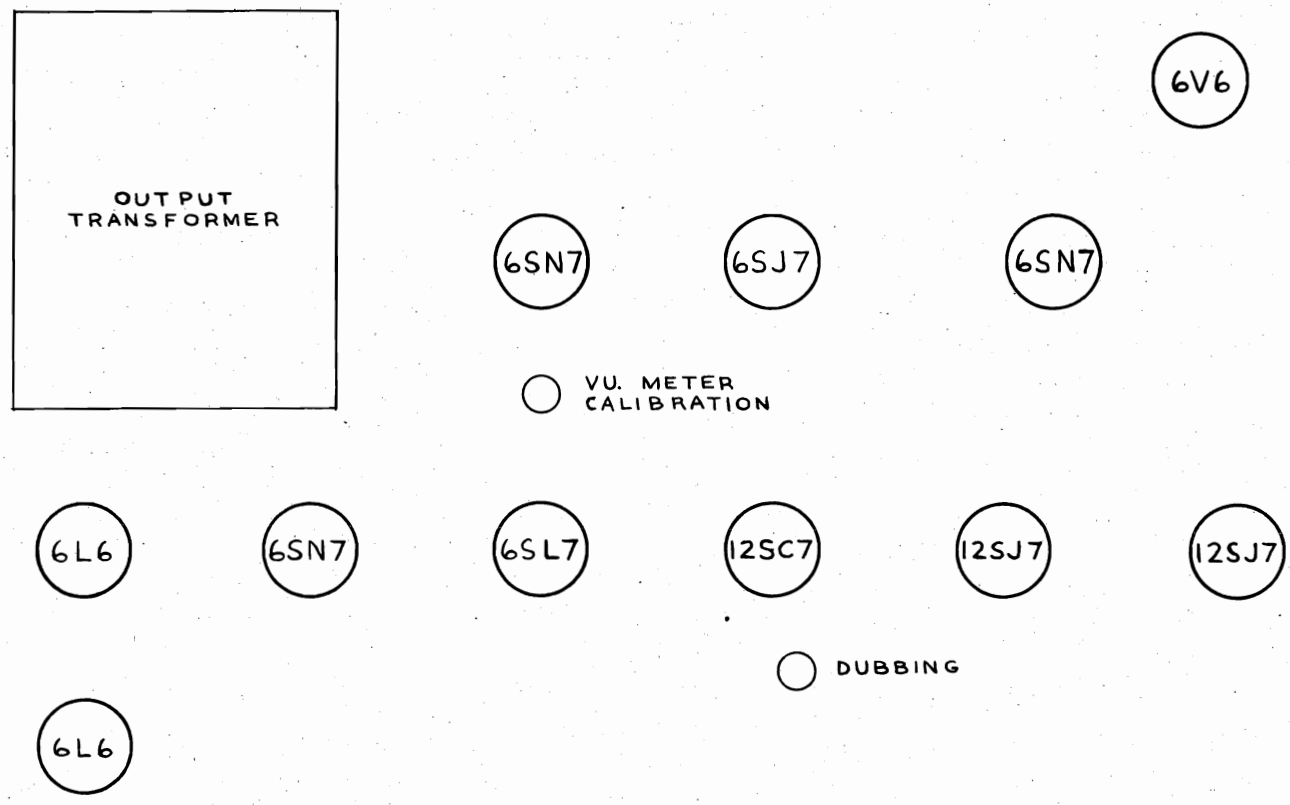

TUBE LAYOUT
FIGURE 1

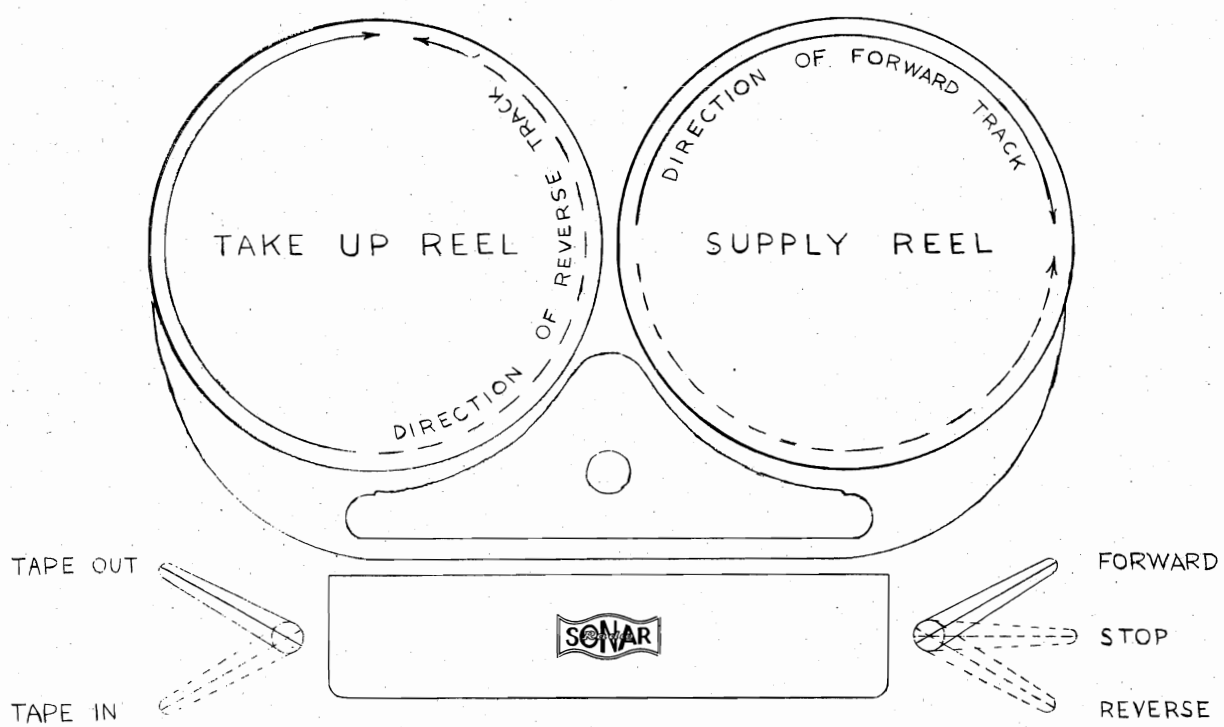

FIGURE 2

©John F. Rider

Compliments of www.nucow.com

MODEL T-10

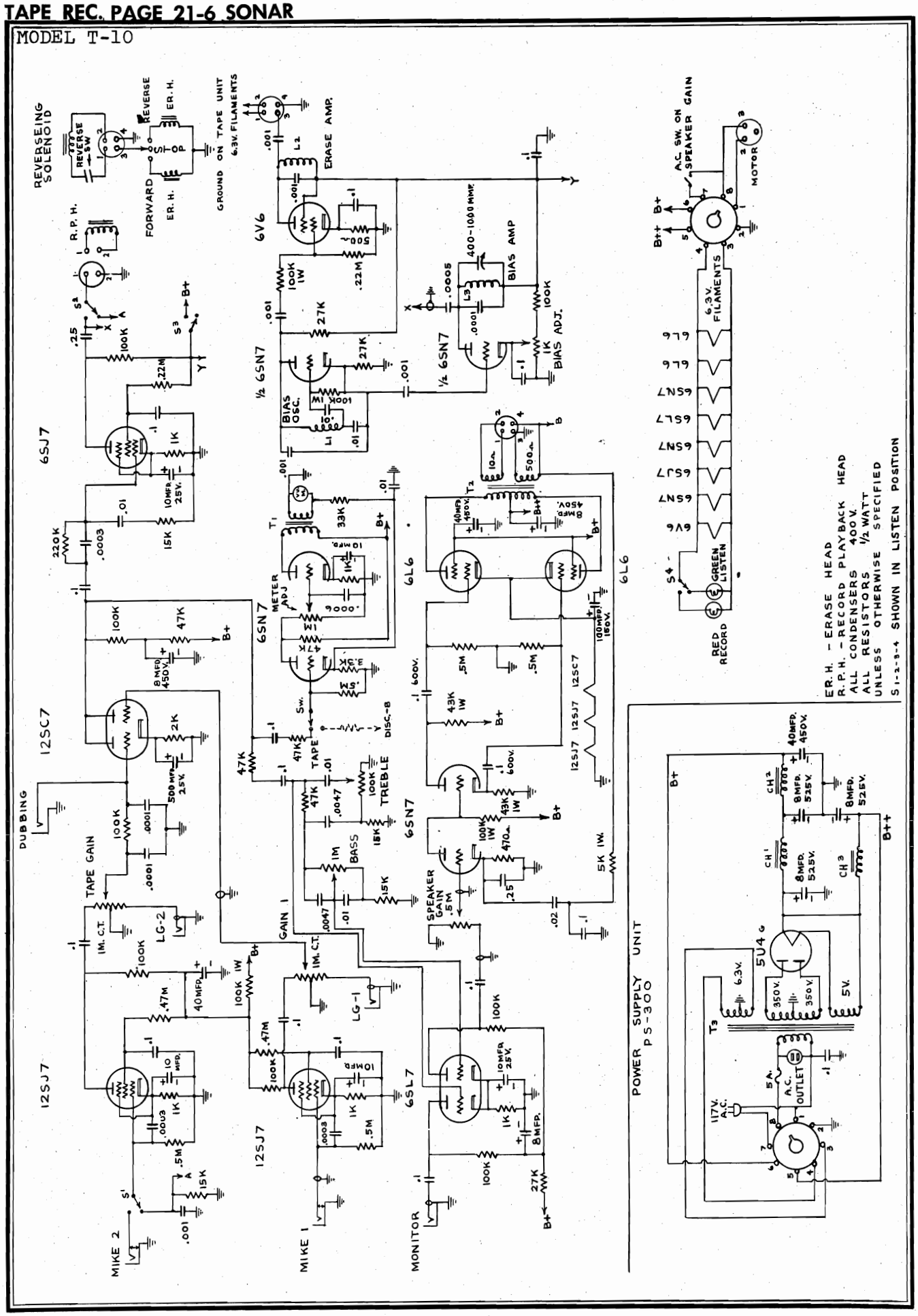

©John F. Rider

Compliments of www.nucow.com